IGNITION

FA-IGN22Q1

•ACCENSIONE • ALLUMAGE • ZÜNDUNG • ENCENDIDO

ICIM UNI EN ISO 14001:2015 CERTIFIED MANAGEMENT SYSTEM

ICIM UNI ISO 45001:2018 CERTIFIED MANAGEMENT SYSTEM

ICIM UNI EN ISO 9001:2015 CERTIFIED MANAGEMENT SYSTEM

CISQ AUTOMOTIVE
IATF 16949

Manufacturer of automobile spare parts

catalogo.facet.eu

TecAlliance
TecDoc Inside

Automotive spare parts manufacturer since 1946

INDEX

•INDICE •CONTENU •INHALT •CONTENIDO

FA-IGN22Q1

CATALOGUES BY PRODUCT CATEGORY — PAGE

-CATALOGHI PER LINEE DI PRODOTTO
-CATALOGUES PAR FAMILLE PRODUIT
-KATALOGE NACH PRODUKTENGRUPPEN
-CATALOGOS POR FAMILIA PRODUCTO — 4

PRODUCT CATEGORIES BY CATALOGUE

-LINEE PRODOTTI PER CATALOGO
-FAMILLES PRODUIT PAR CATALOGUE
-PRODUKTENGRUPPE NACH KATALOG
-FAMILIAS PRODUCTO POR CATALOGO — 5

NEW ITEMS AND THEIR AVAILABILITY

-NUOVI ARTICOLI E LORO DISPONIBILITÀ
-NOUVEAUX PRODUITS ET LEURS DISPONIBILITÉ
-NEUE TEILE UND IHRE VERFÜGBARKEIT
-NOVEDADES Y SU DISPONIBILIDAD — 6

APPLICATION LIST

EXPLICATION TO APPLICATION LIST

-SPIEGAZIONE ALLA GUIDA APPLICAZIONI
-EXPLICATION À LA LISTE D'APPLICATIONS
-ERKLÄRUNG ZUR ANWENDUNGSTABELLE
-EXPLICACÍON A LA LISTA DE APLICACIONES — 12

VEHICLE MANUFACTURERS INDEX

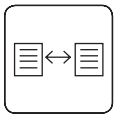

-INDICE COSTRUTTORI VEICOLI
-LISTE DES FABRICANTS VEHICULES
-INHALTSVERZEICHNIS DER FAHRZEUGHERSTELLER
-LISTA DE FABRICANTES DE VEHICULOS — 13

BODY DESIGN

-TIPI DI CARROZZERIA
-TYPES DE CARROSSERIE
-KAROSSERIETYPE
-TIPOS DE CARROCERIA — 15

APPLICATION LIST

-GUIDA APPLICAZIONI
-LISTE D'APPLICATIONS
-ANWENDUNGSTABELLE
-LISTA DE APLICACIONES — 16

GLOSSARY OF FUNCTIONS ON THE VEHICLE

-GLOSSARIO PER FUNZIONI SU VETTURA
-GLOSSAIRE DES FONCTIONS SUR LE VÉHICULE
-GLOSSAR NACH FUNKTION IN AUTO
-GLOSARIO DE LAS FUNCIONES EN LOS VEHICULOS — 954

PRODUCTS BY VEHICLE MANUFACTURER

-ELENCO PRODOTTI PER MARCA
-PRODUITS PAR FABRICANT VEHICULE
-LISTE DER PRODUKTE JE NACH FAHRZEUGMARKE
-PRODUCTOS POR FABRICANTE VEHÍCULO — 955

APPLICATION LIST GLOSSARY

-GLOSSARIO GUIDA APPLICAZIONI
-GLOSSAIRE LISTE D'APPLICATIONS
-GLOSSAR DER VERWENDUNGSLISTE
-GLOSARIO LISTA DE APLICACIONES — 971

ILLUSTRATED SECTION

CONDENSERS
-CONDENSATORI
-CONDENSATEURS
-KONDENSATOREN
-CONDENSADORES — 977

CONTACT SETS
-COPPIE CONTATTI
-RUPTEURS
-KONTAKTSÄTZE
-PLATINOS — 982

DISTRIBUTOR CAPS
-CALOTTE
-TETES D'ALLUMEUR
-VERTEILERKAPPEN
-TAPAS DEL DISTRIBUIDOR — 996

ROTORS
-DISTRIBUTORI
-DISRUPTEURS
-VERTEILERLÄUFER
-ROTORES DEL DISTRIBUIDOR — 1042

DIFFERENTIAL PRESSURE SENSORS
-SENSORI DI PRESSIONE ARIA DIFFERENZIALE
-CAPTEURS DE PRESSION D'AIR DIFFERENTIEL
-DIFFERENZDRUCKSENSOREN
-SENSORES DE PRESIÓN DIFERENCIAL (DPS) — 1079

PICK-UPS
-IMPULSORI
-CAPTEURS
-IMPULSGEBER
-CAPTADORES — 1134

IGNITION MODULES
-MODULI DI ACCENSIONE
-MODULES D'ALLUMAGE
-ZÜNDMODULE
-MÓDULOS DE ENCENDIDO — 1143

IGNITION COILS
-BOBINE DI ACCENSIONE
-BOBINES D'ALLUMAGE
-ZÜNDSPULEN
-BOBINAS DE ENCENDIDO — 1149

CROSS REFERENCE LIST OEM/OES

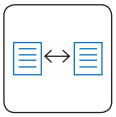

-TABELLA COMPARATIVA OEM/OES
-TABLE COMPARAISON OEM/OES
-VERGLEICHSTABELLE OEM/OES
-TABLA DE EQUIVALENCIAS OEM/OES — 1240

CROSS REFERENCE LIST OTHER MANUFACTURERS

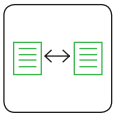

-TABELLA COMPARATIVA ALTRI COSTRUTTORI
-TABLE COMPARAISON D'AUTRES FABRICANTS
-VERGLEICHSTABELLE ANDERE HERSTELLER
-TABLA DE EQUIVALENCIAS OTRAS FABRICANTES — 1268

VARIATIONS COMPARED TO PREVIOUS CATALOGUE EDITION

-VARIAZIONI RISPETTO AI PRECEDENTI CATALOGHI
-VARIATIONS RAPPORTÉES AUX CATALOGUES PRÉCÉDENTS
-ÄNDERUNGEN IM VERGLEICH ZU FRÜHERE KATALOGAUSGABEN
-VARIACIONES CON RESPSECTO A CATALOGOS ANTERIORES — 1288

GENERAL SALES TERMS

-CONDIZIONI GENERALI DI VENDITA
-CONDITIONS GÉNÉRALES DE VENTE
-ALLGEMEINE VERKAUFSBEDINGUNGEN
-CONDICIONES GENERALES DE VENTA — 1294

OUR PACKAGING UNITS

-LE NOSTRE CONFEZIONI
-NOS UNITÉS DE CONDITIONNEMENT
-UNSERE ABPACKENTYPEN
-NUESTROS ENVASES — 1299

CATALOGUES BY PRODUCT CATEGORY

FA-IGN22Q1

•CATALOGHI PER LINEE DI PRODOTTO •CATALOGUES PAR FAMILLE PRODUIT •KATALOGE NACH PRODUKTENGRUPPEN •CATALOGOS POR FAMILIA PRODUCTO

Code	PICTURE	Catalogue	Description
0.0xxx		🔴	**CONDENSERS** •CONDENSATORI •CONDENSATEURS •KONDENSATOREN •CONDENSADORES
1.xxxx		🔴	**CONTACT SETS** •COPPIE CONTATTI •RUPTEURS •KONTAKTSÄTZE •PLATINOS
2.xxxx		🔴	**DISTRIBUTOR CAPS** •CALOTTE •TETES D'ALLUMEUR •VERTEILERKAPPEN •TAPAS DEL DISTRIBUIDOR
3.xxxx		🔴	**ROTORS** •DISTRIBUTORI •DISRUPTEURS •VERTEILERLÄUFER •ROTORES DEL DISTRIBUIDOR
4.xxxx		🔴	**IGNITION CABLE SETS** •SERIE CAVI ACCENSIONE COMPLETA •JEUX CABLES D'ALLUMAGE •ZÜNDKABELSÄTZE •JUEGOS DE CABLES DE ENCENDIDO
7.0xxx		🟢	**ENGINE OIL PRESSURE WARNING LIGHT SWITCHES** •INTERRUTTORI SPIA PRESSIONE OLIO •MANOCONTACTS POUR TEMOIN DE PRESSION D'HUILE •ÖLDRUCKKONTROLLSCHALTER
7.06xx		🟢	**OIL PRESSURE SENSORS** •TRASMETTITORI PRESSIONE OLIO •TRANSMETTEURS DE PRESSION D'HUILE •ÖLDRUCK-IMPULSGEBER •TRANSMISORES DE PRESION DE ACEITE
7.1xxx		🟢	**BRAKE/CLUTCH PEDAL SWITCHES** •INTERRUTTORI PEDALI FRENO/FRIZIONE •CONTACTEURS DE FEUX STOP •BREMS-/ KUPPLUNGSPEDALSCHALTE •INTERRUPTORES PEDAL DE FRENO/EMBRAGUE
7.3xxx		⚫	**COOLANT/OIL/FUEL TEMPERATURE SENDERS** •SENSORI DI TEMPERATURA REFRIGERANTE/OLIO/CARBURANTE •CAPTEURS DE TEMPERATURE REFRIGERANT/HUILE/CARBURANTS •TEMPERATURSENSOR FÜR KÜHLMITTEL/ÖL/KRAFTSTOFF •SENSORES DE TEMPERATURA REFRIGERANTE/ACEITE/COMBUSTIBLE
7.35xx		⚫	**WATER TEMPERATURE SENDERS WITH WARNING LIGHT SWITCH** •TRASMETTITORI CON SPIA TEMPERATURA ACQUA •THERMORESISTANCES AVEC CONTACTEUR POUR TEMOIN TEMPERATURE D'EAU •WASSERTEMPERATUR- IMPULSGEBER MIT KONTROLLICHTSCHALTER •SENSORES DE TEMPERATURA REFRIGERANTE CON INTERRUPTOR PARA LUZ TESTIGO
7.4xxx		⚫	**WATER TEMPERATURE WARNING LIGHT SWITCHES** •INTERRUTTORI COMANDO SPIA TEMPERATURA ACQUA •THERMOCONTACTS POUR TEMOIN TEMPERATURE D'EAU •WASSERTEMPERATUR-KONTROLLICHTSCHALTER •TERMOCONTACTOS LUZ TESTIGO TEMPERATURA DEL AGUA
7.5xxx		⚫	**THERMO-SWITCHES FOR ELECTRIC FANS** •TERMOINTERRUTTORI PER ELETTROVENTILATORI •THERMOCONTACTS D'ELECTROVENTILATEURS •THERMO-SCHALTER FÜR LÜFTERMOTOR •TERMOCONTACTOS PARA ELECTROVENTILADORES
7.56xx		⚫	**THERMO-SWITCHES FOR DOUBLE FAN OR TWO SPEEDS** •TERMOINTERRUTTORI PER ELETTROVENTILATORE DOPPIO O A DUE VELOCITÀ •THERMOCONTACTS POUR DOUBLE VENTILATEUR OU A DEUX VITESSES •THERMO-SCHALTER FÜR DOPPELBELÜFTER ODER FÜR ZWEIGANG-LÜFTERMOTOR •TERMOCONTACTOS PARA DOBLE VENTILADOR O DE DOS VELOCIDADES
7.6xxx		🟢	**REVERSING LIGHT SWITCHES** •INTERRUTTORI LUCI RETROMARCIA •CONTACTEURS FEUX DE RECUL •RÜCKFAHR-SCHEINWERFER-SCHALTER •INTERRUPTORES DE LUZ MARCHA ATRAS
7.8xxx		⚫	**THERMOSTATS** •TERMOSTATI •THERMOSTATS •THERMOSTATE •TERMOSTATOS
7.95xx		⚫	**GASKETS FOR THERMOSTATS** •GUARNIZIONI PER TERMOSTATI •JOINTS POUR THERMOSTATS •DICHTUNGEN FUR THERMOSTATEN •JUNTAS POR TERMOSTATOS
8.xxxx		🔴	**PICK-UPS** •IMPULSORI •CAPTEURS •IMPULSGEBER •CAPTADORES
9.0xxx		🔵	**REVOLUTION AND TIMING (CKP AND CMP) SENSORS** •SENSORI GIRI MOTORE E TRASMISSIONE •CAPTEURS DE REGIME ET DE POSITION •DREHZAHL- UND GETRIEBESENSOREN •SENSORES DE REVOLUCIONES Y POSICIÓN DE CIGÜEÑAL Y ÁRBOL DE LEVAS
9.3xxx		🔵	**KNOCK SENSORS** •SENSORI DI DETONAZIONE •CAPTEURS DE CLIQUETIS •KLOPFSENSOREN •SENSORES DE PICADO
9.4xxx		🔴	**IGNITION MODULES** •MODULI DI ACCENSIONE •MODULES D'ALLUMAGE •ZÜNDMODULE •MÓDULOS DE ENCENDIDO
9.6xxx		🔴	**IGNITION COILS** •BOBINE DI ACCENSIONE •BOBINES D'ALLUMAGE •ZÜNDSPULEN •BOBINAS DE ENCENDIDO
9.8xxx		🔴	**ELECTRONIC IGNITION KITS** •KIT PER ACCENSIONE ELETTRONICA •KIT POUR ALLUMAGE ELECTRONIQUES •ELEKTRONISCHE ZÜNDUNGSSATZ •JUEGOS DE ENCENDIDO ELECTRÓNICO
10.1xxx		🔵	**MASS AIR FLOW METERS (MAF)** •SENSORI DI PORTATA ARIA (MAF) •CAPTEURS DE MASSE D'AIR •LUFTMASSENMESSER •CAUDALIMETROS
10.3xxx		🔵🟡	**AIR PRESSURE SENSORS** •SENSORI DI PRESSIONE ARIA •CAPTEURS DE PRESSION D'AIR •DRUCKSENSOREN •SENSORES DE PRESIÓN DEL AIRE
10.4xxx		🔵	**AIR TEMPERATURE SENSORS** •SENSORI DI TEMPERATURA DELL'ARIA •CAPTEURS DE TEMPERATURE D'AIR •LUFTTEMPERATUR-SENSOREN •TERMORESISTENCIAS PARA TEMPERATURA DE AIRE
10.5xxx		🔵	**THROTTLE POSITION SENSORS** •SENSORI DI POSIZIONE FARFALLA •SONDES DE POSITION DU PAPILLON •DROSSELKLAPPEN-POSITIONS-SENSOREN •SENSORES DE POSICION DE LA MARIPOSA
10.7xxx 10.8xxx		🟡	**OXYGEN SENSORS** •SONDE LAMBDA •SONDES DE RICHESSE •LAMBDASONDEN •SONDAS LAMBDA
21.xxxx		🔵	**WHEEL SPEED SENSORS** •SENSORI DI NUMERO DI GIRI RUOTA •CAPTEURS ABS •RADDREHZAHLSENSOR •SENSORES DE REVOLUCIONES DE RUEDA
22.xxxx		🟡	**EXHAUST GAS TEMPERATURE SENSORS (EGT)** •SENSORI DI TEMPERATURA GAS DI SCARICO (EGT) •CAPTEURS DE TEMPÉRATURE GAS D'ECHAPPEMENT (EGT) •ABGASTEMPERATURSENSOREN (EGT) •SENSORES DE TEMPERATURA GASES DE ESCAPE (EGT)
23.xxxx		🟡	**EGR VALVES** •VALVOLE EGR •EGR VALVES •ABGASRÜCKFÜHRUNGVENTILE •VALVULAS EGR

PRODUCT CATEGORIES BY CATALOGUE

FA-IGN22Q1

•LINEE PRODOTTI PER CATALOGO •FAMILLES PRODUIT PAR CATALOGUE •PRODUKTENGRUPPE NACH KATALOG •FAMILIAS PRODUCTO POR CATALOGO

CATALOGUE •Catalogo •Catalogue •Katalog •Catalogo			Code
	FA-IGNxxxx **Ignition** •Accensione •Allumage •Zündung •Encendido		0.0xxx 1.xxxx 2.xxxx 3.xxxx 4.xxxx 8.xxxx 9.4xxx 9.6xxx 9.8xxx
	FA-SWIxxxx **Switches** •Interruttori •Interrupteurs •Schalter •Interruptores		7.0xxx 7.06xx 7.1xxx 7.6xxx
	FA-TMxxxx **Thermal management** •Gestione termica •Gestion thermique •Thermo-management •Gestiòn térmica		7.3xxx 7.35xx 7.4xxx 7.5xxx 7.56xx 7.8xxx 7.9xxx
	FA-SENxxxx **Sensors** •Sensori •Capteurs •Sensoren •Sensores		9.0xxx 9.3xxx 10.1xxx 10.3xxx 10.4xxx 10.5xxx 21.xxxx
	FA-EMxxxx **Exhaust management** •Gestione gas di scarico •Gestion des gaz d'echappement •Abgas-management •Gestiòn de gas de escape		10.3xxx 10.7xxx 10.8xxx 22.0xxx 23.0xxx

NEW ITEMS AND THEIR AVAILABILITY

FA-IGN22Q1

-Nuovi articoli e loro disponibilità -Nouveaux produits et leur disponibilité -Neue Teile und vorläufige Verfügbarkeit -Novedades y su disponibilidad

CONDENSERS

CONDENSATORI
CONDENSATEURS
KONDENSATOREN
CONDENSADORES

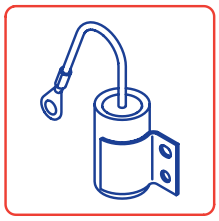

Products listed by date of availability
-Articoli raggruppati per data di **disponibilità**
-Produits groupés par date de **disponibilité**
-Produkte je nach **Verfügbarkeitsdatum** aufgelistet
-Articulos agrupados se gún fecha de **disponibilidad**

AVAILABILITY	CODE

Products listed by code sequence
-Articoli in ordine di **codice**
-Articles en sequence de **réf.**
-Produkte je nach **Artikel-Nr.**
-Articulos en secuencia de **codigo**

CODE	AVAILABILITY

CONTACT SETS

COPPIE CONTATTI
RUPTEURS
KONTAKTSÄTZE
PLATINOS

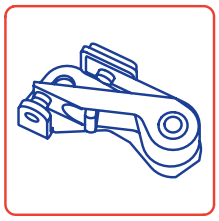

Products listed by date of availability
-Articoli raggruppati per data di **disponibilità**
-Produits groupés par date de **disponibilité**
-Produkte je nach **Verfügbarkeitsdatum** aufgelistet
-Articulos agrupados se gún fecha de **disponibilidad**

AVAILABILITY	CODE

Products listed by code sequence
-Articoli in ordine di **codice**
-Articles en sequence de **réf.**
-Produkte je nach **Artikel-Nr.**
-Articulos en secuencia de **codigo**

CODE	AVAILABILITY

AVAILABLE

marketing@facet.it

NEW ITEMS AND THEIR AVAILABILITY

FA-IGN22Q1

-Nuovi articoli e loro disponibilità -Nouveaux produits et leur disponibilité -Neue Teile und vorläufige Verfügbarkeit -Novedades y su disponibilidad

DISTRIBUTOR CAPS

CALOTTE
TETES D'ALLUMEUR
VERTEILERKAPPEN
TAPAS DEL DISTRIBUIDOR

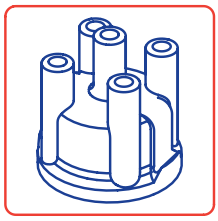

Products listed by date of availability
-Articoli raggruppati per data di **disponibilità**
-Produits groupés par date de **disponibilité**
-Produkte je nach **Verfügbarkeitsdatum** aufgelistet
-Articulos agrupados se gún fecha de **disponibilidad**

AVAILABILITY	CODE

Products listed by code sequence
-Articoli in ordine di **codice**
-Articles en sequence de **réf.**
-Produkte je nach **Artikel-Nr.**
-Articulos en secuencia de **codigo**

CODE	AVAILABILITY

ROTORS

DISTRIBUTORI
DISRUPTEURS
VERTEILERLÄUFER
ROTORES DEL DISTRIBUIDOR

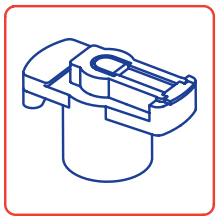

Products listed by date of availability
-Articoli raggruppati per data di **disponibilità**
-Produits groupés par date de **disponibilité**
-Produkte je nach **Verfügbarkeitsdatum** aufgelistet
-Articulos agrupados se gún fecha de **disponibilidad**

AVAILABILITY	CODE

Products listed by code sequence
-Articoli in ordine di **codice**
-Articles en sequence de **réf.**
-Produkte je nach **Artikel-Nr.**
-Articulos en secuencia de **codigo**

CODE	AVAILABILITY

AVAILABLE

NEW ITEMS AND THEIR AVAILABILITY

FA-IGN22Q1

-Nuovi articoli e loro disponibilità -Nouveaux produits et leur disponibilité -Neue Teile und vorläufige Verfügbarkeit -Novedades y su disponibilidad

IGNITION KIT

KIT ACCENSIONE
KIT ALLUMAGE
ZÜNDUNGSÄTZE
JUEGOS DE ENCENDIDO

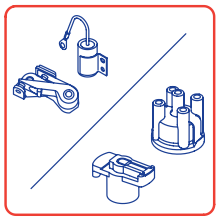

Products listed by date of availability
-Articoli raggruppati per data di **disponibilità**
-Produits groupés par date de **disponibilité**
-Produkte je nach **Verfügbarkeitsdatum** aufgelistet
-Articulos agrupados se gún fecha de **disponibilidad**

AVAILABILITY	CODE

Products listed by code sequence
-Articoli in ordine di **codice**
-Articles en sequence de **réf.**
-Produkte je nach **Artikel-Nr.**
-Articulos en secuencia de **codigo**

CODE	AVAILABILITY

IGNITION CABLE SETS

SERIE CAVI ACCENSIONE COMPLETA
JEUX CABLES D'ALLUMAGE
ZÜNDKABELSÄTZE
JUEGOS DE CABLES DE ENCENDIDO

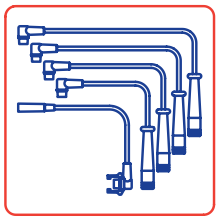

Products listed by date of availability
-Articoli raggruppati per data di **disponibilità**
-Produits groupés par date de **disponibilité**
-Produkte je nach **Verfügbarkeitsdatum** aufgelistet
-Articulos agrupados se gún fecha de **disponibilidad**

AVAILABILITY	CODE

Products listed by code sequence
-Articoli in ordine di **codice**
-Articles en sequence de **réf.**
-Produkte je nach **Artikel-Nr.**
-Articulos en secuencia de **codigo**

CODE	AVAILABILITY

AVAILABLE

NEW ITEMS AND THEIR AVAILABILITY

FA-IGN22Q1

-Nuovi articoli e loro disponibilità -Nouveaux produits et leur disponibilité -Neue Teile und vorläufige Verfügbarkeit -Novedades y su disponibilidad

PICK-UPS

IMPULSORI
CAPTEURS
IMPULSGEBER
CAPTADORES

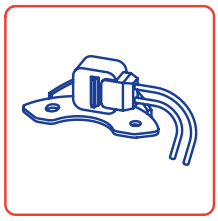

Products listed by code sequence
-Articoli in ordine di **codice**
-Articles en sequence de **réf.**
-Produkte je nach **Artikel-Nr.**
-Articulos en secuencia de **codigo**

CODE	AVAILABILITY

Products listed by date of availability
-Articoli raggruppati per data di **disponibilità**
-Produits groupés par date de **disponibilité**
-Produkte je nach **Verfügbarkeitsdatum** aufgelistet
-Articulos agrupados se gún fecha de **disponibilidad**

AVAILABILITY	CODE

IGNITION MODULES

MODULI DI ACCENSIONE
MODULES D'ALLUMAGE
ZÜNDMODULE
MÓDULOS DE ENCENDIDO

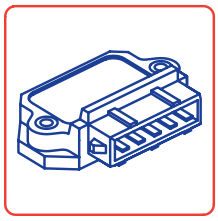

Products listed by code sequence
-Articoli in ordine di **codice**
-Articles en sequence de **réf.**
-Produkte je nach **Artikel-Nr.**
-Articulos en secuencia de **codigo**

CODE	AVAILABILITY

Products listed by date of availability
-Articoli raggruppati per data di **disponibilità**
-Produits groupés par date de **disponibilité**
-Produkte je nach **Verfügbarkeitsdatum** aufgelistet
-Articulos agrupados se gún fecha de **disponibilidad**

AVAILABILITY	CODE

AVAILABLE

NEW ITEMS AND THEIR AVAILABILITY

FA-IGN22Q1

-Nuovi articoli e loro disponibilità -Nouveaux produits et leur disponibilité -Neue Teile und vorläufige Verfügbarkeit -Novedades y su disponibilidad

IGNITION COILS

BOBINE DI ACCENSIONE
BOBINES D'ALLUMAGE
ZÜNDSPULEN
BOBINAS DE ENCENDIDO

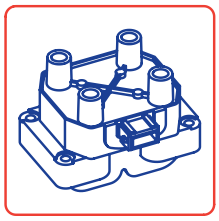

Products listed by code sequence
-Articoli in ordine di **codice**
-Articles en sequence de **réf.**
-Produkte je nach **Artikel-Nr.**
-Articulos en secuencia de **codigo**

CODE	AVAILABILITY
9.6436	☺
9.6438	☺
9.6445	22/04
9.6447	☺
9.6449	☺
9.6451	☺
9.6496	☺
9.6499	☺
9.6502	☺
9.6509	☺
9.6513	☺
9.6519	☺
9.6520	☺
9.6521	☺
9.6522	☺
9.6523	☺
9.6526	☺
9.6527	☺
9.6531	☺
9.6532	☺
9.6536	☺
9.6538	☺
9.6545	☺
9.6547	☺

Products listed by date of availability
-Articoli raggruppati per data di **disponibilità**
-Produits groupés par date de **disponibilité**
-Produkte je nach **Verfügbarkeitsdatum** aufgelistet
-Articulos agrupados se gún fecha de **disponibilidad**

AVAILABILITY	CODE
☺	9.6436
☺	9.6438
☺	9.6447
☺	9.6449
☺	9.6451
☺	9.6496
☺	9.6499
☺	9.6502
☺	9.6509
☺	9.6513
☺	9.6519
☺	9.6520
☺	9.6521
☺	9.6522
☺	9.6523
☺	9.6526
☺	9.6527
☺	9.6531
☺	9.6532
☺	9.6536
☺	9.6538
☺	9.6545
☺	9.6547
22/04	9.6445

☺ AVAILABLE

APPLICATION LIST

FA-IGN22Q1

·GUIDA APPLICAZIONI ·LISTE D'APPLICATIONS ·ANWENDUNGSTABELLE ·LISTA DE APLICACIONES

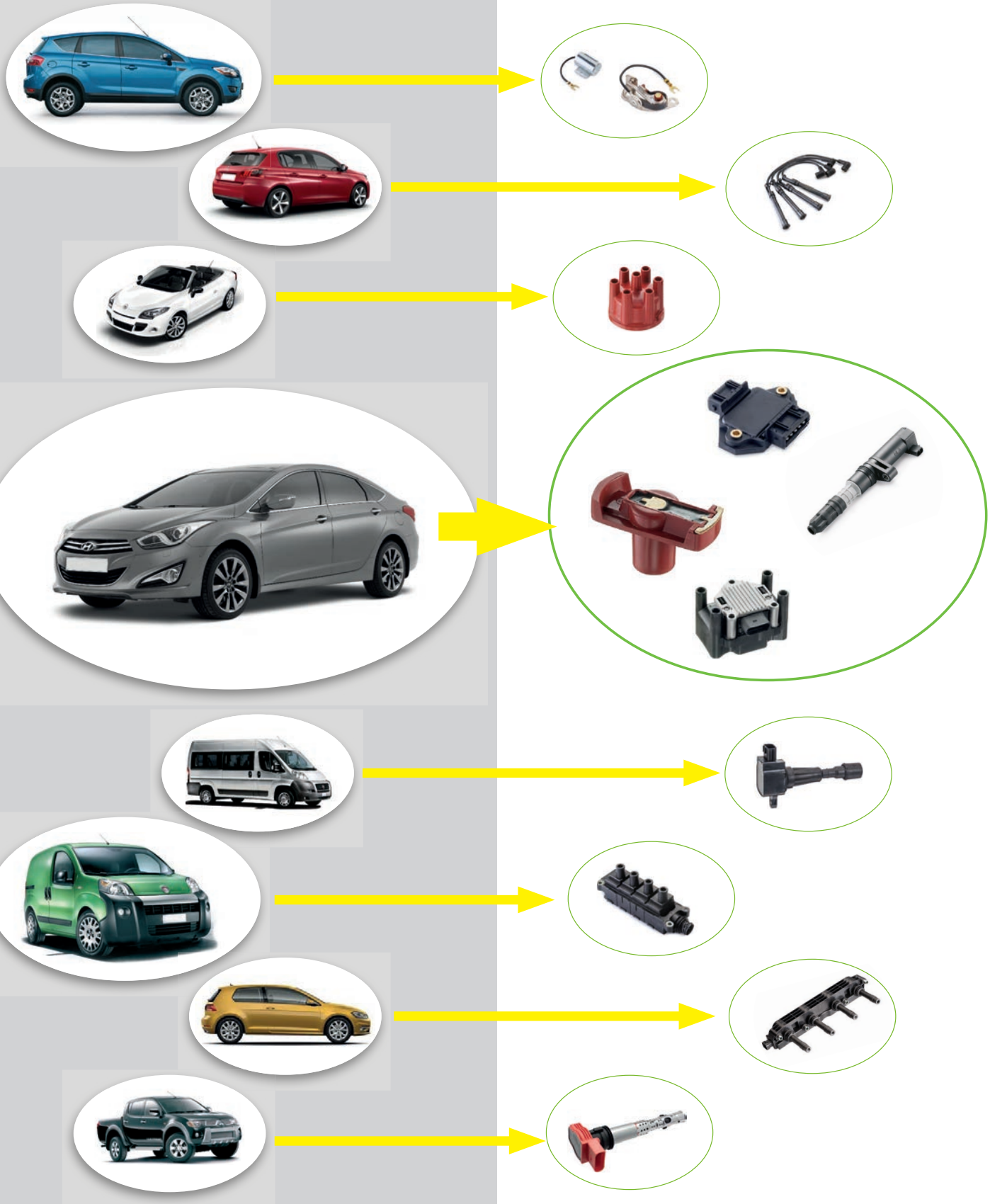

EXPLICATION TO APPLICATION LIST

FA-IGN22Q1

-SPIEGAZIONE ALLA GUIDA APPLICAZIONI -EXPLICATION À LA LISTE D'APPLICATIONS -ERKLÄRUNG ZUR ANWENDUNGSTABELLE -EXPLICACIÓN DE LA LISTA APLICACIONES

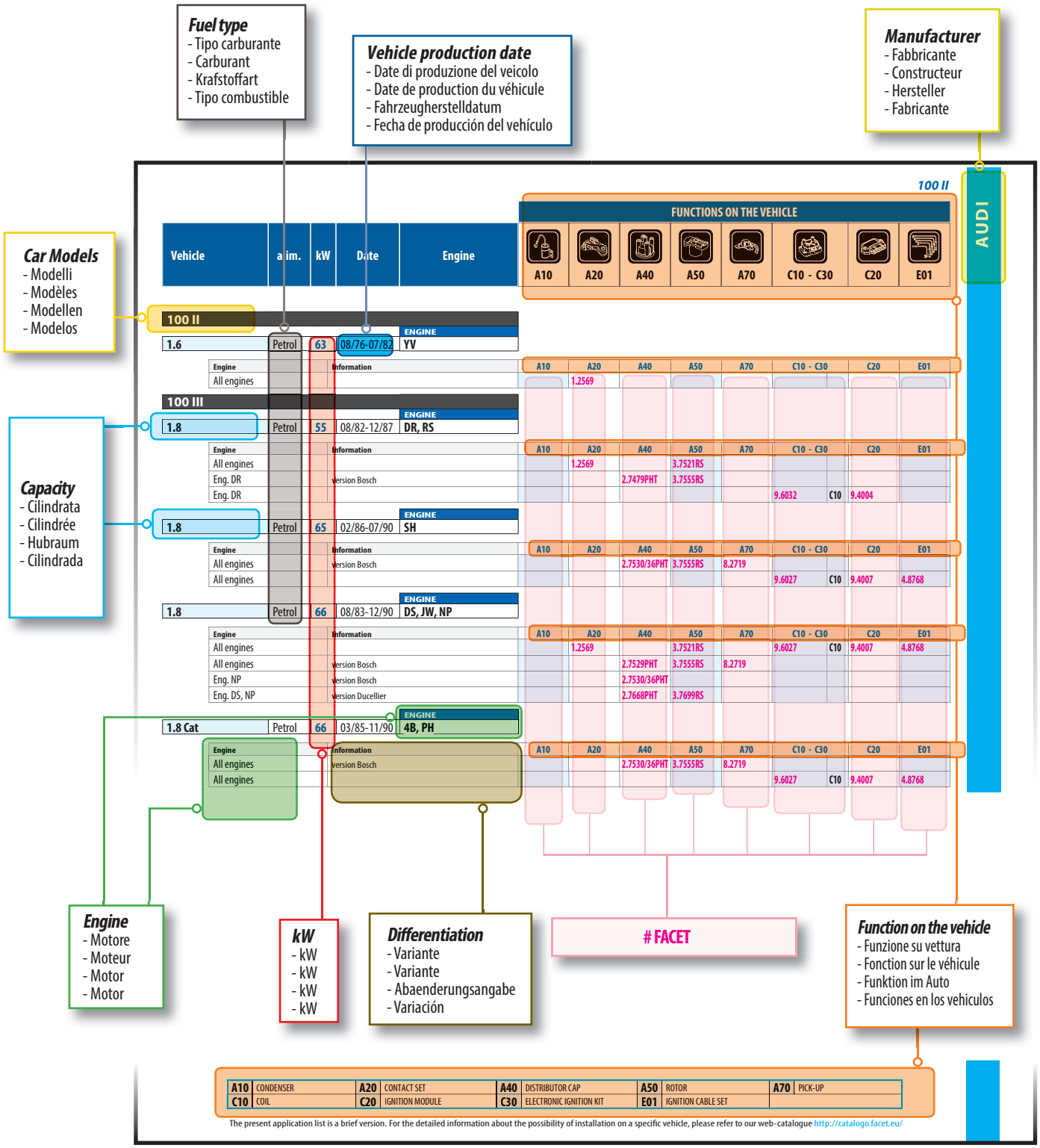

VEHICLE MANUFACTURERS INDEX

FA-IGN22Q1

-INDICE COSTRUTTORI VEICOLI -LISTE DES FABRICANTS VEHICULES -INHALVERZEICHNIS DER FAHRZEUGHERSTELLER -LISTA DE FABRICANTES DE VEHICULOS

Manufacturer	Page
A	
ABARTH	16
ACURA	17
ALFA ROMEO	18
ALPINA	35
ALPINE	36
ASTON MARTIN	37
AUDI	38
AUSTIN	84
AUSTIN-HEALEY	86
B	
BEDFORD	87
BENTLEY	88
BMW	89
BOND	148
BORGWARD	149
C	
CHEVROLET	150
CHRYSLER	158
CITROËN	162
CUPRA	199
D	
DACIA	200
DAEWOO	210
DAIHATSU	215
DAIMLER	219
DS	220
F	
FIAT	222
FIAT (BR)	266
FORD	269
FORD (BR)	308
FORD AUSTRALIA	309
FORD USA	311
FSO	312

Manufacturer	Page
G	
GINETTA	313
H	
HOLDEN	314
HONDA	321
HYUNDAI	343
I	
INFINITI	370
INNOCENTI	373
ISUZU	374
IVECO	375
J	
JAGUAR	377
JEEP	380
JENSEN	382
K	
KIA	383
L	
LADA	403
LANCIA	404
LAND ROVER	415
LEXUS	418
LOTUS	425
M	
MAN	426
MARUTI	427
MASERATI	428
MAZDA	429
MERCEDES-BENZ	452
MG	505
MINI	508
MITSUBISHI	512
MORRIS	530
N	
NISSAN	531
NSU	553

Manufacturer	Page
O	
OPEL	554
P	
PEUGEOT	595
PIAGGIO	633
PORSCHE	634
PUCH	641
R	
RELIANT	642
RENAULT	643
RILEY	701
ROLLS-ROYCE	702
ROVER	703
S	
SAAB	712
SEAT	716
SKODA	738
SMART	752
SSANGYONG	756
SUBARU	758
SUZUKI	765
T	
TALBOT	780
TOYOTA	781
TRIUMPH	819
TVR	822
V	
VAUXHALL	823
VOLKSWAGEN (BR)	847
VOLVO	849
VW	883
W	
WOLSELEY	951
Y	
YUGO	952

Manufacturer	Page
Z	
ZASTAVA	953

BODY DESIGN

-TIPI DI CARROZZERIA -TYPES DE CARROSSERIE -KAROSSERIETYPE -TIPOS DE CARROCERIA

FA-IGN22Q1

Hatchback
- Coda spiovente
- Fastback
- Schräger
- Fastback

Station Wagon
- Familiare
- Break
- Kombi
- Ranchera familiar

MPV
- Monovolume
- Monospace
- Großraumlimousine
- Limusina

Closed off-road vehicle
- Fuori strada chiuso
- Véhicule tout terrain à carrosserie fermée
- Geländewagen geschlossen
- Todo terreno, cerrada

Bus
- Autobus
- Autobus/Autocar
- Bus
- Autobús

Flatbed/Chassis
- Pianale piatto/Autotelaio
- Camion plate-forme/Chassis
- Pritsche/Fahrgestell
- Caja/Chasis

Saloon
- Tre volumi
- A trois volumes
- Stufenheck
- Sedan

Convertibile
- Cabriolet
- Décapotable
- Cabriolet
- Descapotable

Coupe
- Coupé
- Coupé
- Coupe
- Coupé

Open off-road vehicle
- Fuori strada aperto
- Véhicule tout terrain à carrosserie ouverte
- Geländewagen offen
- Todo terreno, abierta

Box
- Furgonato
- Camionette
- Kasten
- Furgón

Vehicle	alim.	kW	Date	Engine	FUNCTIONS ON THE VEHICLE							
					A10	A20	A40	A50	A70	C10 - C30	C20	E01

PUNTO

				ENGINE
1.4	Petrol	120	03/12->	955 A8.000

Engine	Information	A10	A20	A40	A50	A70	C10 - C30		C20	E01
All engines	x 4, COIL ON PLUG						9.6449	C10		

				ENGINE
1.4 SUPERSPORT	Petrol	132	03/12->	199 A8.000, 955 A8.000

Engine	Information	A10	A20	A40	A50	A70	C10 - C30		C20	E01
Eng. 199 A8.000	Qty: 4						9.6449	C10		
Eng. 955 A8.000	x 4, COIL ON PLUG						9.6449	C10		

PUNTO EVO

				ENGINE
1.4	Petrol	120	10/09-02/12	955 A8.000

Engine	Information	A10	A20	A40	A50	A70	C10 - C30		C20	E01
All engines	x 4, COIL ON PLUG						9.6449	C10		

RITMO

				ENGINE
125 TC 2.0	Petrol	92	11/81-12/87	138 AR1.000

Engine	Information	A10	A20	A40	A50	A70	C10 - C30		C20	E01
All engines	version Marelli				3.8254RS	8.4961/1				

A10	CONDENSER	**A20**	CONTACT SET	**A40**	DISTRIBUTOR CAP	**A50**	ROTOR	**A70**	PICK-UP
C10	COIL	**C20**	IGNITION MODULE	**C30**	ELECTRONIC IGNITION KIT	**E01**	IGNITION CABLE SET		

The present application list is a brief version. For the detailed information about the possibility of installation on a specific vehicle, please refer to our web-catalogue http://catalogo.facet.eu/

Vehicle	alim.	kW	Date	Engine	FUNCTIONS ON THE VEHICLE							
					A10	A20	A40	A50	A70	C10 - C30	C20	E01
INTEGRA I												
				ENGINE								
1.6	Petrol	74	01/85-12/90	D16A1, D16A3								
All engines	->year 31/01/88, version Hitachi						2.7969					
All engines	->year 31/12/87, version Hitachi							3.7956				
All engines	01/01/88 ->, ->year 31/12/88, version Hitachi							3.7982				
All engines	->year 31/12/87									9.6112 C10		
All engines	01/01/88 ->									9.6113 C10	9.4052	
				ENGINE								
1.6 i	Petrol	88	01/85-12/90	D16A8								
All engines	->year 31/01/88, version Hitachi						2.7969					
All engines	->year 31/12/87, version Hitachi							3.7956				
All engines	01/01/88 ->, ->year 31/12/88, version Hitachi							3.7982				
All engines	->year 31/12/87									9.6112 C10		
All engines	01/01/88 ->									9.6113 C10	9.4052	
INTEGRA II												
				ENGINE								
1.8	Petrol	77	10/90-09/93	F18A2								
All engines	01/01/92 ->, version Hitachi						2.7968					
All engines	version Hitachi, no specific info conc. application available							3.7995, 3.7997RS				
All engines	01/01/92 ->									9.6114 C10		
All engines	->year 31/12/91									9.6115 C10		
All engines											9.4052	
INTEGRA III												
				ENGINE								
1.8 GS-R	Petrol	147	10/93-09/01	F18C2								
All engines	version Hitachi							3.7995				
All engines										9.6114 C10		
				ENGINE								
1.8 LS	Petrol	125	10/93-09/01	F18C1								
All engines	01/01/92 ->, version Hitachi						2.7968					
All engines	version Hitachi, no specific info conc. application available							3.7995, 3.7997RS				
All engines	01/01/92 ->									9.6114 C10		
				ENGINE								
1.8 Sport	Petrol	125	10/93-09/01	F18C1								
All engines	01/01/92 ->, version Hitachi						2.7968					
All engines	version Hitachi, no specific info conc. application available							3.7995, 3.7997RS				
All engines	01/01/92 ->									9.6114 C10		
VIGOR												
				ENGINE								
2.5	Petrol	140	09/91->	G25A, G25A2								
All engines	version Hitachi						2.7984					

A10	CONDENSER	**A20**	CONTACT SET	**A40**	DISTRIBUTOR CAP	**A50**	ROTOR	**A70**	PICK-UP
C10	COIL	**C20**	IGNITION MODULE	**C30**	ELECTRONIC IGNITION KIT	**E01**	IGNITION CABLE SET		

The present application list is a brief version. For the detailed information about the possibility of installation on a specific vehicle, please refer to our web-catalogue http://catalogo.facet.eu/

Vehicle	alim.	kW	Date	Engine	FUNCTIONS ON THE VEHICLE A10	A20	A40	A50	A70	C10 - C30	C20	E01

145

				ENGINE
1.4 i.e.	Petrol	66	07/94-12/96	AR 33501

Engine	Information	A10	A20	A40	A50	A70	C10 - C30		C20	E01
All engines	x 1, D.I.S., connector type DIN						9.6046	C10		

				ENGINE
1.4 i.e. 16V T.S.	Petrol	76	12/96-01/01	AR 33503

Engine	Information	A10	A20	A40	A50	A70	C10 - C30		C20	E01
All engines	->VET. 3174687, x 4, SEMI-DIRECT						9.6286	C10		
All engines	VET. 3174688 ->, x 4, SEMI-DIRECT						9.6287	C10		
All engines										4.9608

				ENGINE
1.6 16V T.S.	Petrol	82	09/97-12/00	AR 32102

Engine	Information	A10	A20	A40	A50	A70	C10 - C30		C20	E01
All engines	x 4, SEMI-DIRECT						9.6287	C10		
All engines										4.9608

				ENGINE
1.6 i.e.	Petrol	76	10/94-12/96	AR 33201

Engine	Information	A10	A20	A40	A50	A70	C10 - C30		C20	E01
All engines	->VET. 3014142, x 1, D.I.S., connector type, saw teeth						9.6068	C10		

				ENGINE
1.6 i.e. 16V T.S.	Petrol	88	12/96-01/01	AR 32102, AR 67601

Engine	Information	A10	A20	A40	A50	A70	C10 - C30		C20	E01
All engines	->VET. 3174687, x 4, SEMI-DIRECT						9.6286	C10		
All engines	VET. 3174688 ->, x 4, SEMI-DIRECT						9.6287	C10		

				ENGINE
1.6 LPG	LPG	88	01/98-01/01	AR 32102

Engine	Information	A10	A20	A40	A50	A70	C10 - C30		C20	E01
All engines	->VET. 3174687, x 4, SEMI-DIRECT						9.6286	C10		
All engines	VET. 3174688 ->, x 4, SEMI-DIRECT						9.6287	C10		

				ENGINE
1.7 i.e. 16V	Petrol	95	10/94-12/96	AR 33401

Engine	Information	A10	A20	A40	A50	A70	C10 - C30		C20	E01
All engines	x 1, D.I.S., connector type, saw teeth						9.6068	C10		

				ENGINE
1.8 i.e. 16V	Petrol	106	03/98-01/01	AR 32201

Engine	Information	A10	A20	A40	A50	A70	C10 - C30		C20	E01
All engines	x 4, SEMI-DIRECT						9.6287	C10		
All engines										4.9608

				ENGINE
1.8 i.e. 16V T.S.	Petrol	103	12/96-12/98	AR 67106

Engine	Information	A10	A20	A40	A50	A70	C10 - C30		C20	E01
All engines	x 2, SEMI-DIRECT						9.6286	C10		
All engines										4.9608

				ENGINE
1.8 i.e. 16V T.S. [BRA]	Petrol	110	10/96-02/99	AR 67199

Engine	Information	A10	A20	A40	A50	A70	C10 - C30		C20	E01
All engines	Qty: 4, without spark plug connector						9.6286	C10		
All engines	incl. spark plug connector, Qty: 4						9.6286K	C10		
All engines										4.9608

				ENGINE
2.0 16V	Petrol	114	03/98-01/01	AR 32301

Engine	Information	A10	A20	A40	A50	A70	C10 - C30		C20	E01
All engines	x 4, SEMI-DIRECT						9.6287	C10		
All engines										4.9608

				ENGINE
2.0 16V T.S.	Petrol	110	10/95-01/01	AR 67204

Engine	Information	A10	A20	A40	A50	A70	C10 - C30		C20	E01
All engines	x 2, SEMI-DIRECT						9.6286	C10		
All engines										4.9608

A10	CONDENSER	A20	CONTACT SET	A40	DISTRIBUTOR CAP	A50	ROTOR	A70	PICK-UP
C10	COIL	C20	IGNITION MODULE	C30	ELECTRONIC IGNITION KIT	E01	IGNITION CABLE SET		

The present application list is a brief version. For the detailed information about the possibility of installation on a specific vehicle, please refer to our web-catalogue http://catalogo.facet.eu/

Vehicle	alim.	kW	Date	Engine	FUNCTIONS ON THE VEHICLE A10	A20	A40	A50	A70	C10 - C30	C20	E01
2.0 16V T.SPARK [BRA]	Petrol	110	10/96-02/99	**AR 67299**								

Engine	Information	A10	A20	A40	A50	A70	C10 - C30		C20	E01
All engines	without spark plug connector, Qty: 4						9.6286	C10		
All engines	incl. spark plug connector, Qty: 4						9.6286K	C10		
All engines										4.9608

Vehicle	alim.	kW	Date	Engine
2.0 16V T.SPARK Q.V. [BRA]	Petrol	110	10/95-09/96	**AR 67299**

Engine	Information	A10	A20	A40	A50	A70	C10 - C30		C20	E01
All engines	Qty: 4						9.6286K	C10		

146

Vehicle	alim.	kW	Date	Engine
1.4 i.e.	Petrol	66	12/94-12/96	**AR 33501**

Engine	Information	A10	A20	A40	A50	A70	C10 - C30		C20	E01
All engines	x 1, D.I.S., connector type DIN						9.6046	C10		

Vehicle	alim.	kW	Date	Engine
1.4 i.e. 16V T.S.	Petrol	76	11/96-01/01	**AR 33503**

Engine	Information	A10	A20	A40	A50	A70	C10 - C30		C20	E01
All engines	->VET. 165088, x 4, SEMI-DIRECT						9.6286	C10		
All engines	VET. 165089 ->, x 4, SEMI-DIRECT						9.6287	C10		
All engines										4.9608

Vehicle	alim.	kW	Date	Engine
1.6 16V T.S.	Petrol	82	09/97-12/00	**AR 32102**

Engine	Information	A10	A20	A40	A50	A70	C10 - C30		C20	E01
All engines	x 4, SEMI-DIRECT						9.6287	C10		
All engines										4.9608

Vehicle	alim.	kW	Date	Engine
1.6 i.e. 16V T.S.	Petrol	88	11/96-10/01	**AR 32102, AR 67601**

Engine	Information	A10	A20	A40	A50	A70	C10 - C30		C20	E01
All engines	->VET. 165088, x 4, SEMI-DIRECT						9.6286	C10		
All engines	VET. 165089 ->, x 4, SEMI-DIRECT						9.6287	C10		
Eng. AR 67601										4.9608

Vehicle	alim.	kW	Date	Engine
1.7 i.e. 16V	Petrol	95	12/94-12/96	**AR 33401**

Engine	Information	A10	A20	A40	A50	A70	C10 - C30		C20	E01
All engines	x 1, D.I.S., connector type, saw teeth						9.6068	C10		

Vehicle	alim.	kW	Date	Engine
1.8 i.e. 16V T.S.	Petrol	103	11/96-01/01	**AR 67106**

Engine	Information	A10	A20	A40	A50	A70	C10 - C30		C20	E01
All engines	x 2, SEMI-DIRECT						9.6286	C10		
All engines										4.9608

Vehicle	alim.	kW	Date	Engine
1.8 i.e. 16V T.S.	Petrol	106	03/98-01/01	**AR 32201**

Engine	Information	A10	A20	A40	A50	A70	C10 - C30		C20	E01
All engines	x 4, SEMI-DIRECT						9.6287	C10		
All engines										4.9608

Vehicle	alim.	kW	Date	Engine
2.0 16V	Petrol	114	03/97-10/01	**AR 32301**

Engine	Information	A10	A20	A40	A50	A70	C10 - C30		C20	E01
All engines	x 4, SEMI-DIRECT						9.6287	C10		
All engines										4.9608

Vehicle	alim.	kW	Date	Engine
2.0 16V T.S.	Petrol	110	10/95-01/01	**AR 67204**

Engine	Information	A10	A20	A40	A50	A70	C10 - C30		C20	E01
All engines	->year 01/12/96, x 4, SEMI-DIRECT ---------- 01/03/99 ->, x 4, SEMI-DIRECT						9.6286	C10		
All engines	01/01/97 ->, ->year 01/02/99, x 4, SEMI-DIRECT						9.6287	C10		
All engines										4.9608

A10	CONDENSER	**A20**	CONTACT SET	**A40**	DISTRIBUTOR CAP	**A50**	ROTOR	**A70**	PICK-UP
C10	COIL	**C20**	IGNITION MODULE	**C30**	ELECTRONIC IGNITION KIT	**E01**	IGNITION CABLE SET		

The present application list is a brief version. For the detailed information about the possibility of installation on a specific vehicle, please refer to our web-catalogue http://catalogo.facet.eu/

ALFA ROMEO

Vehicle	alim.	kW	Date	Engine	FUNCTIONS ON THE VEHICLE A10	A20	A40	A50	A70	C10 - C30	C20	E01

147

				ENGINE
1.6 16V T.SPARK	Petrol	88	01/01-03/10	AR 32104

Engine	Information	A10	A20	A40	A50	A70	C10 - C30	C20	E01
All engines	x 4, COIL ON PLUG						9.6297 C10		
All engines									4.9607

				ENGINE
1.6 16V T.SPARK ECO	Petrol	77	01/01-03/10	AR 37203

Engine	Information	A10	A20	A40	A50	A70	C10 - C30	C20	E01
All engines	x 4, COIL ON PLUG						9.6297 C10		
All engines									4.9607

				ENGINE
1.6 LPG	Petrol/ Liquified Petro-leum Gas (LPG)	77	01/09-03/10	AR 37203

Engine	Information	A10	A20	A40	A50	A70	C10 - C30	C20	E01
All engines	x 4, COIL ON PLUG						9.6297 C10		

				ENGINE
1.6 LPG	Petrol/ Liquified Petro-leum Gas (LPG)	88	03/01-12/09	AR 32104

Engine	Information	A10	A20	A40	A50	A70	C10 - C30	C20	E01
All engines	x 4, COIL ON PLUG						9.6297 C10		

				ENGINE
2.0 16V T.SPARK	Petrol	110	01/01-03/10	AR 32310

Engine	Information	A10	A20	A40	A50	A70	C10 - C30	C20	E01
All engines	x 4, COIL ON PLUG						9.6297 C10		
All engines									4.9607

				ENGINE
3.2 GTA	Petrol	184	02/03-03/10	932 A.000

Engine	Information	A10	A20	A40	A50	A70	C10 - C30	C20	E01
All engines	x 6, COIL ON PLUG						9.6213 C10		

155

				ENGINE
1.6 16V T.S.	Petrol	88	05/96-12/97	AR 67601

Engine	Information	A10	A20	A40	A50	A70	C10 - C30	C20	E01
All engines	without spark plug connector, Qty: 4						9.6286 C10		
All engines	incl. spark plug connector, Qty: 4						9.6286K C10		
All engines									4.9608

				ENGINE
1.7 T.S.	Petrol	83	04/93-04/96	AR 67103

Engine	Information	A10	A20	A40	A50	A70	C10 - C30	C20	E01
All engines	Qty: 2						9.6068 C10		
All engines									4.8623

				ENGINE
1.7 T.S.	Petrol	85	04/93-04/96	AR 67105

Engine	Information	A10	A20	A40	A50	A70	C10 - C30	C20	E01
All engines	Qty: 2						9.6068 C10		
All engines									4.8623

				ENGINE
1.7 T.S. 16V	Petrol	103	05/96-12/97	AR 67106

Engine	Information	A10	A20	A40	A50	A70	C10 - C30	C20	E01
All engines	without spark plug connector, Qty: 4						9.6286 C10		
All engines	incl. spark plug connector, Qty: 4						9.6286K C10		
All engines									4.9608

				ENGINE
1.8 T.S.	Petrol	95	02/92-05/94	AR 67101

Engine	Information	A10	A20	A40	A50	A70	C10 - C30	C20	E01
All engines	Qty: 2						9.6068 C10		
All engines									4.8623

A10	CONDENSER	A20	CONTACT SET	A40	DISTRIBUTOR CAP	A50	ROTOR	A70	PICK-UP
C10	COIL	C20	IGNITION MODULE	C30	ELECTRONIC IGNITION KIT	E01	IGNITION CABLE SET		

The present application list is a brief version. For the detailed information about the possibility of installation on a specific vehicle, please refer to our web-catalogue http://catalogo.facet.eu/

Vehicle	alim.	kW	Date	Engine	FUNCTIONS ON THE VEHICLE A10	A20	A40	A50	A70	C10 - C30	C20	E01
1.8 T.S. Sport	Petrol	93	03/92-12/96	**AR 67101, AR 67102**								
All engines	Qty: 2									9.6068 C10		
All engines												4.8623
2.0 16V Turbo Q4	Petrol	137	01/92-12/97	**AR 67203**								
All engines	Qty: 2									9.6046 C10		
2.0 16V Turbo Q4	Petrol	140	03/92-12/97	**AR 67203**								
All engines	Qty: 2									9.6046 C10		
2.0 T.S.	Petrol	104	02/92-05/95	**AR 67201, AR 67202**								
All engines	Qty: 2									9.6068 C10		
All engines												4.8623
2.0 T.S.	Petrol	106	02/92-01/95	**AR 67201, AR 67202**								
All engines	Qty: 2									9.6068 C10		
All engines												4.8623
2.0 T.S. 16V	Petrol	110	03/95-12/97	**AR 67204, AR 67299**								
All engines	without spark plug connector, Qty: 4									9.6286 C10		
All engines	incl. spark plug connector, Qty: 4									9.6286K C10		
All engines												4.9608
156												
1.6 16V T.SPARK	Petrol	82	09/97-09/05	**AR 32102**								
All engines	x 4, SEMI-DIRECT									9.6287 C10		
All engines												4.9608
1.6 16V T.SPARK	Petrol	88	09/97-09/05	**AR 32102, AR 32103, AR 32104, AR 67601**								
Eng. AR 67601	->VET. 0084340, x 4, SEMI-DIRECT									9.6286 C10		
Eng. AR 32102, AR 67601	VET. 0084341 ->, x 4, SEMI-DIRECT									9.6287 C10		
Eng. AR 32103, AR 32104	x 4, COIL ON PLUG									9.6297 C10		
Eng. AR 32103, AR 32104												4.9607
Eng. AR 32102, AR 67601												4.9608
1.6 16V T.SPARK.	Petrol	81	07/00-07/05	**AR 32103**								
All engines	without spark plug connector, Qty: 4									9.6297 C10		
All engines	incl. spark plug connector, Qty: 4									9.6297K C10		
All engines												4.9607
1.6 16V T.SPARK.	Petrol	88	05/00-05/06	**AR 32102, AR 32103, AR 32104, AR 67601**								
Eng. AR 67601	->VET. 0084340, x 4, SEMI-DIRECT									9.6286 C10		
Eng. AR 32102	without spark plug connector, Qty: 4									9.6287 C10		
Eng. AR 67601	VET. 0084341 ->, x 4, SEMI-DIRECT									9.6287 C10		
Eng. AR 32102	incl. spark plug connector, Qty: 4									9.6287K C10		
Eng. AR 32103	without spark plug connector, Qty: 4									9.6297 C10		
Eng. AR 32104	x 4, COIL ON PLUG									9.6297 C10		
Eng. AR 32103	incl. spark plug connector, Qty: 4									9.6297K C10		
Eng. AR 32103, AR 32104												4.9607
Eng. AR 32102, AR 67601												4.9608

A10	CONDENSER	**A20**	CONTACT SET	**A40**	DISTRIBUTOR CAP	**A50**	ROTOR	**A70**	PICK-UP
C10	COIL	**C20**	IGNITION MODULE	**C30**	ELECTRONIC IGNITION KIT	**E01**	IGNITION CABLE SET		

The present application list is a brief version. For the detailed information about the possibility of installation on a specific vehicle, please refer to our web-catalogue http://catalogo.facet.eu/

Vehicle	alim.	kW	Date	Engine	FUNCTIONS ON THE VEHICLE A10	A20	A40	A50	A70	C10 - C30	C20	E01
1.8 16V T.SPARK	Petrol	103	02/97-05/06	**AR 32205**								

Engine	Information	A10	A20	A40	A50	A70	C10 - C30	C20	E01
All engines	euro 2, x 4, SEMI-DIRECT						9.6287 C10		
All engines	euro 3, x 4, COIL ON PLUG						9.6297 C10		

1.8 16V T.SPARK	Petrol	106	09/97-10/00	**AR 32201**								

Engine	Information	A10	A20	A40	A50	A70	C10 - C30	C20	E01
All engines	euro 2, x 4, SEMI-DIRECT						9.6287 C10		
All engines	euro 3, x 4, COIL ON PLUG						9.6297 C10		
All engines									4.9608

2.0 16V T.SPARK	Petrol	110	10/00-03/02	**AR 32310**								

Engine	Information	A10	A20	A40	A50	A70	C10 - C30	C20	E01
All engines	euro 2, x 4, SEMI-DIRECT						9.6287 C10		
All engines	euro 3, x 4, COIL ON PLUG						9.6297 C10		
All engines									4.9607

2.0 16V T.SPARK	Petrol	114	09/97-06/02	**AR 32301, AR 32310**								

Engine	Information	A10	A20	A40	A50	A70	C10 - C30	C20	E01
Eng. AR 32301	euro 2, x 4, SEMI-DIRECT						9.6287 C10		
Eng. AR 32301	euro 3, x 4, COIL ON PLUG						9.6297 C10		
Eng. AR 32310	without spark plug connector, Qty: 4						9.6297 C10		
Eng. AR 32310	incl. spark plug connector, Qty: 4						9.6297K C10		
Eng. AR 32310									4.9607
Eng. AR 32301									4.9608

2.0 Twin Spark	Petrol	118	11/97-04/00	**AR 32303**								

Engine	Information	A10	A20	A40	A50	A70	C10 - C30	C20	E01
All engines	euro 2, x 4, SEMI-DIRECT						9.6287 C10		
All engines	euro 3, x 4, COIL ON PLUG						9.6297 C10		

2.5 V6 24V	Petrol	140	02/97-08/03	**AR 32401**								

Engine	Information	A10	A20	A40	A50	A70	C10 - C30	C20	E01
All engines	x 6, COIL ON PLUG						9.6213 C10		

2.5 V6 24V	Petrol	141	02/97-05/06	**AR 32405**								

Engine	Information	A10	A20	A40	A50	A70	C10 - C30	C20	E01
All engines	x 6, COIL ON PLUG						9.6213 C10		

2.5 V6 24V [BRA]	Petrol	140	10/97-12/01	**AR 32402**								

Engine	Information	A10	A20	A40	A50	A70	C10 - C30	C20	E01
All engines	Qty: 6						9.6213 C10		

3.2 GTA	Petrol	184	03/02-05/06	**932 A.000**								

Engine	Information	A10	A20	A40	A50	A70	C10 - C30	C20	E01
All engines	x 6, COIL ON PLUG						9.6213 C10		

159

1.8 MPI	Petrol	103	06/05-11/11	**939 A4.000**								

Engine	Information	A10	A20	A40	A50	A70	C10 - C30	C20	E01
All engines	x 4, COIL ON PLUG						9.6350 C10		

1.8 TBi	Petrol	147	05/09-12/12	**939 B1.000**								

Engine	Information	A10	A20	A40	A50	A70	C10 - C30	C20	E01
All engines	x 4, COIL ON PLUG						9.6449 C10		

164

2.0 T.S.	Petrol	105	06/87-09/92	**AR 06416**								

Engine	Information	A10	A20	A40	A50	A70	C10 - C30	C20	E01
All engines	Qty: 2, version Bosch			2.7479PHT					

A10	CONDENSER	**A20**	CONTACT SET	**A40**	DISTRIBUTOR CAP	**A50**	ROTOR	**A70**	PICK-UP
C10	COIL	**C20**	IGNITION MODULE	**C30**	ELECTRONIC IGNITION KIT	**E01**	IGNITION CABLE SET		

The present application list is a brief version. For the detailed information about the possibility of installation on a specific vehicle, please refer to our web-catalogue http://catalogo.facet.eu/

Vehicle	alim.	kW	Date	Engine	FUNCTIONS ON THE VEHICLE							
					A10	A20	A40	A50	A70	C10 - C30	C20	E01
2.0 T.S.	Petrol	106	09/92-09/98	**AR 64103**								
All engines	Qty: 2									9.6068 C10		
2.0 T.S.	Petrol	109	06/87-09/92	**AR 06420**								
All engines	Qty: 2, version Bosch						2.7479PHT					
2.0 Turbo	Petrol	128	10/87-09/98	**AR 06476**								
All engines	version Marelli						2.8215PHT					
All engines	->year 01/07/90, version Marelli							3.8255RS				
All engines	01/07/90 ->, version Marelli							3.8259				
2.0 Turbo	Petrol	129	02/88-10/92	**AR 06476**								
All engines	version Marelli						2.8215PHT					
All engines	->year 01/07/90, version Marelli							3.8255RS				
All engines	01/07/90 ->, version Marelli							3.8259				
2.0 Turbo	Petrol	148	07/90-10/92	**AR 64102**								
All engines	version Bosch						2.7530/6PHT	3.7573/19RS				
All engines												4.8666
2.0 Twin Spark	Petrol	109	06/87-09/92	**AR 06420**								
All engines	Qty: 2, version Bosch						2.7479PHT					
2.0 V6 Turbo	Petrol	148	09/92-09/98	**AR 64102**								
All engines	version Bosch						2.7530/6PHT					
2.0 V6 Turbo	Petrol	150	03/91-09/92	**AR 64101**								
All engines	version Bosch						2.7530/6PHT	3.7573/19RS				
All engines												4.8666
3.0	Petrol	138	11/87-09/91	**AR 06410**								
All engines	version Bosch						2.7530/6PHT	3.7573/19RS				
3.0	Petrol	168	04/93-02/95	**AR 64304**								
All engines	Qty: 6									9.6213 C10		
3.0 24V	Petrol	154	03/95-10/97	**AR 66302**								
All engines	Qty: 6									9.6213 C10		
3.0 24V	Petrol	155	09/92-09/98	**AR 66301, AR 66302**								
All engines	Qty: 6									9.6213 C10		
3.0 24V Q4	Petrol	170	02/94-09/98	**AR 64307, AR 64308**								
All engines	Qty: 6									9.6213 C10		

A10	CONDENSER	**A20**	CONTACT SET	**A40**	DISTRIBUTOR CAP	**A50**	ROTOR	**A70**	PICK-UP
C10	COIL	**C20**	IGNITION MODULE	**C30**	ELECTRONIC IGNITION KIT	**E01**	IGNITION CABLE SET		

The present application list is a brief version. For the detailed information about the possibility of installation on a specific vehicle, please refer to our web-catalogue http://catalogo.facet.eu/

Vehicle	alim.	kW	Date	Engine	FUNCTIONS ON THE VEHICLE A10	A20	A40	A50	A70	C10 - C30	C20	E01
3.0 24V Q4	Petrol	171	09/92-10/98	ENGINE AR 66304								
Engine: All engines	Information: Qty: 6									9.6213 C10		
3.0 24V QV	Petrol	171	09/92-09/98	ENGINE AR 64304								
Engine: All engines	Information: Qty: 6									9.6213 C10		
3.0 24V QV [USA]	Petrol	170	04/93-02/95	ENGINE AR 64308								
Engine: All engines	Information: Qty: 6									9.6213 C10		
3.0 24V QV Trazione integrale	Petrol	171	11/92-10/97	ENGINE AR 64307								
Engine: All engines	Information: Qty: 6									9.6213 C10		
3.0 i.e. QV	Petrol	147	09/90-09/92	ENGINE AR 64301								
Engine: All engines	Information: version Bosch						2.7530/6PHT	3.7573/19RS				
3.0 Lusso [USA] [CAN]	Petrol	135	10/91-03/93	ENGINE AR 06412								
Engine: All engines	Information: version Bosch						2.7530/6PHT	3.7573/19RS				
3.0 Sport [CAN] [USA]	Petrol	147	11/90-03/92	ENGINE AR 64301								
Engine: All engines	Information: version Bosch						2.7530/6PHT	3.7573/19RS				
3.0 V6	Petrol	135	06/87-09/92	ENGINE AR 06412								
Engine: All engines	Information: version Bosch						2.7530/6PHT	3.7573/19RS				
3.0 V6	Petrol	141	06/87-09/92	ENGINE AR 06410								
Engine: All engines	Information: version Bosch						2.7530/6PHT	3.7573/19RS				
3.0i 24V Super [BRA]	Petrol	155	09/92-10/98	ENGINE 64306								
Engine: All engines	Information: Qty: 6									9.6213 C10		
3.0i 24V Super Q4	Petrol	171	03/95-12/98	ENGINE AR 66304								
Engine: All engines	Information: Qty: 6									9.6213 C10		
166												
2.0 T.Spark	Petrol	110	10/00-06/07	ENGINE AR 36301								
Engine: All engines	Information: x 4, COIL ON PLUG									9.6297 C10		
Engine: All engines	Information:											4.9607
2.0 T.Spark	Petrol	114	09/98-10/00	ENGINE AR 34103								
Engine: All engines	Information: x 4, SEMI-DIRECT									9.6287 C10		
Engine: All engines	Information:											4.9608
2.5 V6 24V	Petrol	138	10/00-06/07	ENGINE AR 36201								
Engine: All engines	Information: x 6, COIL ON PLUG									9.6213 C10		

A10	CONDENSER	A20	CONTACT SET	A40	DISTRIBUTOR CAP	A50	ROTOR	A70	PICK-UP
C10	COIL	C20	IGNITION MODULE	C30	ELECTRONIC IGNITION KIT	E01	IGNITION CABLE SET		

The present application list is a brief version. For the detailed information about the possibility of installation on a specific vehicle, please refer to our web-catalogue http://catalogo.facet.eu/

Vehicle	alim.	kW	Date	Engine	FUNCTIONS ON THE VEHICLE A10	A20	A40	A50	A70	C10 - C30	C20	E01
2.5 V6 24V	Petrol	140	09/98-12/06	**AR 34201**								
Engine: All engines — Information: x 6, COIL ON PLUG										9.6213 C10		
3.0 V6 24V	Petrol	162	10/00-06/07	**AR 36101**								
Engine: All engines — Information: x 6, COIL ON PLUG										9.6213 C10		
3.0 V6 24V	Petrol	166	09/98-06/07	**AR 34301**								
Engine: All engines — Information: x 6, COIL ON PLUG										9.6213 C10		
3.2 V6 24V	Petrol	176	10/03-06/07	**936 A.000**								
Engine: All engines — Information: x 6, COIL ON PLUG										9.6213 C10		
1750-2000												
1.7	Petrol	80	04/68-11/71	**AR 10525**								
Engine: All engines — Information:						1.2547						
1750	Petrol	83	03/68-10/72	**AR 00548**								
Engine: All engines — Information:						1.2547						
33 I												
1.2	Petrol	50	06/83-12/89	**AR 30585**								
Engine: All engines — Information: version Bosch							2.7479PHT	3.7561RS				
Engine: All engines — Information: version Ducellier							2.7654PHT					
1.3	Petrol	55	06/83-12/89	**AR 30586**								
Engine: All engines — Information: version Bosch							2.7479PHT	3.7561RS				
Engine: All engines — Information: version Ducellier							2.7654PHT					
1.3	Petrol	63	10/84-12/89	**AR 30168, AR 30587**								
Engine: All engines — Information: version Bosch							2.7479PHT	3.7561RS				
Engine: All engines — Information: version Ducellier							2.7654PHT					
Engine: Eng. AR 30168 — Information: version Marelli								3.8251RS				
Engine: Eng. AR 30168 — Information: version Bosch									8.2653			
Engine: Eng. AR 30168 — Information:											9.4005	
1.3 i.e.	Petrol	66	05/83-12/89	**AR 30168**								
Engine: All engines — Information: version Bosch							2.7479PHT	3.7561RS	8.2653			
Engine: All engines — Information: version Ducellier							2.7654PHT					
Engine: All engines — Information: version Marelli								3.8251RS				
Engine: All engines — Information:											9.4005	
1.4	Petrol	66	01/84-12/88	**AR 30587**								
Engine: All engines — Information: version Bosch							2.7479PHT	3.7561RS				
Engine: All engines — Information: version Ducellier							2.7654PHT					
1.5	Petrol	75	07/86-12/89	**AR 30588**								
Engine: All engines — Information: version Bosch							2.7479PHT	3.7561RS				
Engine: All engines — Information: version Ducellier							2.7654PHT					

A10	CONDENSER	**A20**	CONTACT SET	**A40**	DISTRIBUTOR CAP	**A50**	ROTOR	**A70**	PICK-UP
C10	COIL	**C20**	IGNITION MODULE	**C30**	ELECTRONIC IGNITION KIT	**E01**	IGNITION CABLE SET		

The present application list is a brief version. For the detailed information about the possibility of installation on a specific vehicle, please refer to our web-catalogue http://catalogo.facet.eu/

Vehicle	alim.	kW	Date	Engine	FUNCTIONS ON THE VEHICLE A10	A20	A40	A50	A70	C10 - C30	C20	E01
1.5	Petrol	77	12/86-12/89	AR 30588								
Engine	Information						2.7479PHT	3.7561RS				
All engines	version Bosch						2.7654PHT					
All engines	version Ducellier											
1.5 4x4	Petrol	75	07/86-12/89	AR 30588								
Engine	Information						2.7479PHT	3.7561RS				
All engines	version Bosch						2.7654PHT					
All engines	version Ducellier											
1.5 4x4	Petrol	77	09/86-12/89	AR 30508, AR 30588								
Engine	Information						2.7479PHT	3.7561RS				
All engines	version Bosch						2.7654PHT					
All engines	version Ducellier							3.8251RS				
Eng. AR 30508	version Marelli								8.2653			
Eng. AR 30508	version Bosch										9.4005	
Eng. AR 30508												
1.5 QV	Petrol	77	06/84-12/89	AR 30146, AR 30508, AR 30588								
Engine	Information						2.7479PHT	3.7561RS				
All engines	version Bosch						2.7654PHT					
All engines	version Ducellier											
1.7	Petrol	87	01/86-06/90	AR 30550								
Engine	Information						2.7479PHT	3.7561RS				
All engines	version Bosch						2.7654PHT					
All engines	version Ducellier											
1.7	Petrol	95	01/86-12/89	AR 30550								
Engine	Information						2.7479PHT	3.7561RS				
All engines	version Bosch						2.7654PHT					
All engines	version Ducellier											
1.7 i.e.	Petrol	77	09/88-12/89	AR 30558								
Engine	Information						2.7479PHT	3.7561RS				
All engines	version Bosch							3.7573/21RS				
All engines	for emission-controlled vehicles, version Bosch											
1.7 i.e. 4x4	Petrol	77	09/88-12/89	AR 30558								
Engine	Information						2.7479PHT	3.7561RS				
All engines	version Bosch							3.7573/21RS				
All engines	for emission-controlled vehicles, version Bosch											
1.7 QV	Petrol	84	03/88-12/89	AR 30550								
Engine	Information						2.7479PHT	3.7561RS				
All engines	version Bosch						2.7654PHT					
All engines	version Ducellier											
33 II												
1.2	Petrol	57	01/90-08/91	AR 30743								
Engine	Information						2.7479PHT	3.7561RS				
All engines	version Bosch											
1.3	Petrol	66	09/91-10/94	AR 30732								
Engine	Information						2.7479PHT	3.7561RS				
All engines	version Bosch											
1.4 4x4	Petrol	66	07/90-12/92	AR 30755								
Engine	Information						2.7479PHT	3.7573/21RS				
All engines	version Bosch											

A10	CONDENSER	A20	CONTACT SET	A40	DISTRIBUTOR CAP	A50	ROTOR	A70	PICK-UP
C10	COIL	C20	IGNITION MODULE	C30	ELECTRONIC IGNITION KIT	E01	IGNITION CABLE SET		

The present application list is a brief version. For the detailed information about the possibility of installation on a specific vehicle, please refer to our web-catalogue http://catalogo.facet.eu/

Vehicle	alim.	kW	Date	Engine	FUNCTIONS ON THE VEHICLE							
					A10	A20	A40	A50	A70	C10 - C30	C20	E01
1.4 i.e.	Petrol	65	06/91-09/94	ENGINE AR 30753, AR 30755								
Eng. AR 30755	version Bosch						2.7479PHT	3.7573/21RS				
Eng. AR 30753	Qty: 2									9.6046 C10		
1.4 i.e.	Petrol	66	06/91-09/94	ENGINE AR 30753, AR 30755								
Eng. AR 30755	version Bosch						2.7479PHT	3.7573/21RS				
Eng. AR 30753	Qty: 2									9.6046 C10		
1.4 i.e. 4x4	Petrol	66	07/90-09/94	ENGINE AR 30755								
All engines	version Bosch						2.7479PHT	3.7573/21RS				
1.5	Petrol	77	01/90-04/93	ENGINE AR 30734								
All engines	version Bosch						2.7479PHT	3.7561RS				
1.5 i.e	Petrol	71	01/90-09/94	ENGINE AR 30751								
All engines	version Bosch						2.7479PHT	3.7573/21RS				
1.5 i.e.	Petrol	70	09/91-12/95	ENGINE AR 30738								
All engines										9.6068 C10		
1.5 i.e.	Petrol	74	07/90-08/91	ENGINE AR 30750								
All engines	version Bosch						2.7479PHT	3.7573/21RS				
1.7 16V	Petrol	101	01/90-09/94	ENGINE AR 30746								
All engines	version Bosch						2.7479PHT	3.7573/23RS				
1.7 16V	Petrol	95	01/90-09/94	ENGINE AR 30747								
All engines	version Bosch						2.7479PHT	3.7573/23RS				
1.7 16V	Petrol	97	01/90-09/94	ENGINE AR 30747								
All engines	version Bosch						2.7479PHT	3.7573/23RS				
1.7 16V 4x4	Petrol	101	01/90-09/94	ENGINE AR 30746								
All engines	version Bosch						2.7479PHT	3.7573/23RS				
1.7 16V 4x4	Petrol	95	01/90-09/94	ENGINE AR 30747								
All engines	version Bosch						2.7479PHT	3.7573/23RS				
1.7 16V 4x4	Petrol	97	01/90-09/94	ENGINE AR 30747								
All engines	version Bosch						2.7479PHT	3.7573/23RS				
1.7 i.e.	Petrol	77	09/91-12/95	ENGINE AR 30737, AR 30740								
Eng. AR 30737	version Bosch						2.7479PHT	3.7573/21RS				
Eng. AR 30740										9.6068 C10		

A10	CONDENSER	A20	CONTACT SET	A40	DISTRIBUTOR CAP	A50	ROTOR	A70	PICK-UP
C10	COIL	C20	IGNITION MODULE	C30	ELECTRONIC IGNITION KIT	E01	IGNITION CABLE SET		

The present application list is a brief version. For the detailed information about the possibility of installation on a specific vehicle, please refer to our web-catalogue http://catalogo.facet.eu/

Vehicle	alim.	kW	Date	Engine	FUNCTIONS ON THE VEHICLE							
					A10	A20	A40	A50	A70	C10 - C30	C20	E01
1.7 i.e.	Petrol	79	01/90-09/94	**AR 30736, AR 30737**								
Engine: All engines	Information: version Bosch						2.7479PHT	3.7573/21RS				
1.7 i.e. 4x4	Petrol	79	01/90-09/94	**AR 30736, AR 30737**								
Engine: All engines	Information: version Bosch						2.7479PHT	3.7573/21RS				
4C												
1.8	Petrol	177	03/13-12/20	**960 A1.000**								
Engine: All engines	Information: x 4, COIL ON PLUG, x 4, COIL ON PLUG									9.6449 C10		
6												
2.0	Petrol	99	07/81-12/86	**AR 01932**								
Engine: All engines	Information: version Bosch						2.7481PHT	3.7524RS				
75												
1.6	Petrol	81	05/85-09/89	**AR 06100**								
Engine: All engines	Information: version Bosch						2.7479PHT	3.7555RS	8.2653			
Engine: All engines	Information:											4.8716
1.6 Cat	Petrol	81	05/89-02/92	**AR 61101**								
Engine: All engines	Information: version Bosch						2.7479PHT					
1.8	Petrol	85	09/85-06/89	**AR 06202**								
Engine: All engines	Information: version Bosch						2.7479PHT		8.2653			
Engine: All engines	Information: LHD, version Bosch							3.7561RS				
Engine: All engines	Information: RHD, version Bosch							3.7573/21RS				
Engine: All engines	Information: version Marelli							3.8254RS				
Engine: All engines	Information:											4.8716
1.8	Petrol	88	09/88-02/92	**AR 06168, AR 61102**								
Engine: All engines	Information: version Bosch						2.7479PHT					
Engine: Eng. AR 06168	Information: version Bosch							3.7555RS				
1.8	Petrol	90	08/89-02/92	**AR 61201**								
Engine: All engines	Information: version Bosch						2.7479PHT					
1.8 i.e.	Petrol	88	08/89-02/92	**61202**								
Engine: All engines	Information: version Bosch						2.7479PHT					
1.8 i.e. Turbo America	Petrol	118	02/86-01/90	**61203**								
Engine: All engines	Information: version Bosch						2.7479PHT	3.7573/21RS				
1.8 Turbo	Petrol	110	09/86-02/92	**AR 06134**								
Engine: All engines	Information: version Bosch						2.7479PHT	3.7573/21RS				
2.0 T.S Cat	Petrol	109	05/85-02/92	**AR 06224**								
Engine: All engines	Information: Qty: 2, version Bosch						2.7479PHT					

A10	CONDENSER	**A20**	CONTACT SET	**A40**	DISTRIBUTOR CAP	**A50**	ROTOR	**A70**	PICK-UP
C10	COIL	**C20**	IGNITION MODULE	**C30**	ELECTRONIC IGNITION KIT	**E01**	IGNITION CABLE SET		

The present application list is a brief version. For the detailed information about the possibility of installation on a specific vehicle, please refer to our web-catalogue http://catalogo.facet.eu/

Vehicle	alim.	kW	Date	Engine	FUNCTIONS ON THE VEHICLE A10	A20	A40	A50	A70	C10 - C30	C20	E01
2.0 T.S.	Petrol	107	01/87-02/92	**AR 06166, AR 06224**								
Engine: All engines	Information: Qty: 2, version Bosch						2.7479PHT					
2.0 T.S.	Petrol	109	01/87-12/88	**AR 06224**								
Engine: All engines	Information: Qty: 2, version Bosch						2.7479PHT					
2.5 V6	Petrol	110	05/85-08/86	**AR 01646, AR 01648, AR 01911**								
Engine: All engines	Information: version Bosch						2.7481PHT					
Engine: Eng. AR 01911	Information: version Bosch							3.7573/13RS				
Engine: All engines	Information:											4.8660
3.0 V6	Petrol	136	01/87-12/90	**AR 06120**								
Engine: All engines	Information: version Bosch						2.7481PHT	3.7573/13RS				
Engine: All engines	Information:											4.8660
3.0 V6	Petrol	141	02/90-02/92	**AR 61503**								
Engine: All engines	Information: version Bosch						2.7481PHT	3.7573/13RS				
Engine: All engines	Information:											4.8660
3.0 V6 Cat	Petrol	136	01/87-02/92	**AR 06124**								
Engine: All engines	Information: version Bosch						2.7481PHT	3.7573/13RS				
Engine: All engines	Information:											4.8660
90												
1.8	Petrol	85	10/84-07/87	**AR 06202**								
Engine: All engines	Information: version Bosch						2.7479PHT	3.7561RS	8.2653			
Engine: All engines	Information: FOR: (CH), version Bosch							3.7573/21RS				
Engine: All engines	Information: version Marelli							3.8254RS				
1.8	Petrol	89	10/84-07/87	**AR 06202**								
Engine: All engines	Information: version Bosch						2.7479PHT	3.7561RS	8.2653			
Engine: All engines	Information: FOR: (CH), version Bosch							3.7573/21RS				
Engine: All engines	Information: version Marelli							3.8254RS				
2.0 i.e.	Petrol	97	10/84-07/87	**AR 06210**								
Engine: All engines	Information: version Bosch						2.7479PHT	3.7561RS	8.2653			
Engine: All engines	Information: FOR: (CH), version Bosch							3.7573/21RS				
Engine: All engines	Information: version Marelli							3.8254RS				
2.5 i.e. V6	Petrol	110	10/84-07/87	**AR 01646**								
Engine: All engines	Information: version Bosch						2.7481PHT					
ALFASUD												
1.2	Petrol	46	06/72-09/84	**AR 30102**								
Engine: All engines	Information: version Ducellier				0.0334		2.7649PHT					
Engine: All engines	Information: version Marelli				0.0617							
Engine: All engines	Information: version Bosch					1.2534HDVS	2.7479PHT					
Engine: All engines	Information:									9.6001D C10		

A10	CONDENSER	**A20**	CONTACT SET	**A40**	DISTRIBUTOR CAP	**A50**	ROTOR	**A70**	PICK-UP
C10	COIL	**C20**	IGNITION MODULE	**C30**	ELECTRONIC IGNITION KIT	**E01**	IGNITION CABLE SET		

The present application list is a brief version. For the detailed information about the possibility of installation on a specific vehicle, please refer to our web-catalogue http://catalogo.facet.eu/

Vehicle	alim.	kW	Date	Engine	FUNCTIONS ON THE VEHICLE							
					A10	A20	A40	A50	A70	C10 - C30	C20	E01
1.5 ti	Petrol	70	05/80-06/84	**AR 30128**								
All engines	version Bosch						2.7479PHT		8.2653			
All engines	version Ducellier						2.7654PHT					
All engines	version Marelli							3.8251RS				
ALFETTA												
1.6	Petrol	79	01/75-12/84	**AR 01600**								
All engines	version Bosch						2.7479PHT	3.7561RS	8.2653			
All engines	version Marelli							3.8254RS				
1.8	Petrol	85	07/74-04/82	**AR 01608 X**								
All engines	version Marelli				0.0617			3.8242RS				
All engines	version Bosch					1.2534HDVS	2.7479PHT	3.7525RS				
All engines										9.6001D C10		
1.8	Petrol	89	10/79-12/84	**AR 01608**								
All engines	version Bosch						2.7479PHT	3.7561RS	8.2653			
All engines	version Marelli							3.8254RS				
BRERA												
1.8 TBi	Petrol	147	05/09-06/10	**939 B1.000**								
All engines	x 4, COIL ON PLUG									9.6449 C10		
GIULIA												
1300 Super	Petrol	64	01/74-12/78	**AR 00530**								
All engines						1.2529HDV						
1300 TI	Petrol	62	04/69-07/75	**--**								
All engines						1.2529HDV						
1600 Super	Petrol	71	06/64-08/69	**AR 00526**								
All engines						1.2547						
GIULIETTA I												
1.3	Petrol	66	10/77-06/83	**AR 01644**								
All engines	version Marelli				0.0617			3.8242RS				
All engines	version Bosch					1.2534HDVS	2.7479PHT	3.7525RS				
All engines										9.6001D C10		
1.6	Petrol	79	10/77-04/85	**AR 01600**								
All engines	version Bosch						2.7479PHT	3.7561RS	8.2653			
All engines	version Marelli							3.8254RS				
1.8	Petrol	90	04/79-04/85	**AR 01678**								
All engines	version Bosch						2.7479PHT	3.7561RS	8.2653			
All engines	version Marelli							3.8254RS				
2.0	Petrol	96	06/80-04/85	**AR 01655**								
All engines	version Bosch						2.7479PHT	3.7561RS	8.2653			

A10	CONDENSER	**A20**	CONTACT SET	**A40**	DISTRIBUTOR CAP	**A50**	ROTOR	**A70**	PICK-UP
C10	COIL	**C20**	IGNITION MODULE	**C30**	ELECTRONIC IGNITION KIT	**E01**	IGNITION CABLE SET		

The present application list is a brief version. For the detailed information about the possibility of installation on a specific vehicle, please refer to our web-catalogue http://catalogo.facet.eu/

Vehicle	alim.	kW	Date	Engine	FUNCTIONS ON THE VEHICLE A10	A20	A40	A50	A70	C10 - C30	C20	E01
2.0	Petrol	96	06/80-04/85	ENGINE AR 01655								
Engine: All engines	Information: version Marelli							3.8254RS				
GIULIETTA II												
1.4	Petrol	125	04/11-12/20	ENGINE 940 A2.000								
Engine: All engines	Information: x 4, COIL ON PLUG									9.6449 C10		
1.4 TB	Petrol	110	09/14-10/18	ENGINE 940 C2.000								
Engine: All engines	Information: euro 5, x 4, COIL ON PLUG euro 6, x 4, COIL ON PLUG									9.6449 C10		
1.4 TB	Petrol	120	04/10-10/18	ENGINE 955 A8.000								
Engine: All engines	Information: x 4, COIL ON PLUG									9.6449 C10		
1.4 TB	Petrol	125	04/10-10/18	ENGINE 940 A2.000								
Engine: All engines	Information: x 4, COIL ON PLUG									9.6449 C10		
1.8	Petrol	173	04/11-02/16	ENGINE 940 A1.000								
Engine: All engines	Information: x 4, COIL ON PLUG									9.6449 C10		
1.8 TBi	Petrol	169	04/10-09/13	ENGINE 940 A1.000								
Engine: All engines	Information: x 4, COIL ON PLUG									9.6449 C10		
1.8 TBi	Petrol	173	04/10-02/16	ENGINE 940 A1.000								
Engine: All engines	Information: x 4, COIL ON PLUG									9.6449 C10		
1.8 TBi	Petrol	177	09/13-10/18	ENGINE 940 B2.000, 960 A1.000								
Engine: Eng. 940 B2.000	Information: x 4, COIL ON PLUG									9.6449 C10		
Engine: Eng. 960 A1.000	Information: Qty: 4									9.6449 C10		
GT												
1.8	Petrol	80	04/68-11/71	ENGINE AR 10525								
Engine: All engines	Information:					1.2547						
1.8 TS	Petrol	103	11/03-09/10	ENGINE AR 32205								
Engine: All engines	Information: x 4, COIL ON PLUG									9.6297 C10		
Engine: All engines	Information:											4.9607
1300 Junior	Petrol	64	01/66-12/77	ENGINE AR 00530								
Engine: All engines	Information:					1.2547	2.7462					
Engine: All engines	Information: version BOSCH						2.7476PHT					
1600	Petrol	75	03/63-12/66	ENGINE AR 00526 S								
Engine: All engines	Information: version BOSCH						2.7476PHT					

A10	CONDENSER	A20	CONTACT SET	A40	DISTRIBUTOR CAP	A50	ROTOR	A70	PICK-UP
C10	COIL	C20	IGNITION MODULE	C30	ELECTRONIC IGNITION KIT	E01	IGNITION CABLE SET		

The present application list is a brief version. For the detailed information about the possibility of installation on a specific vehicle, please refer to our web-catalogue http://catalogo.facet.eu/

Vehicle	alim.	kW	Date	Engine	FUNCTIONS ON THE VEHICLE							
					A10	A20	A40	A50	A70	C10 - C30	C20	E01
3.2 GTA	Petrol	176	11/03-09/10	**ENGINE 936 A.000**								
Engine	Information				A10	A20	A40	A50	A70	C10 - C30	C20	E01
All engines	x 6, COIL ON PLUG									9.6213 C10		
A 1600	Petrol	83	01/65-12/70	**ENGINE AR 10538**								
Engine	Information				A10	A20	A40	A50	A70	C10 - C30	C20	E01
All engines	version BOSCH						2.7476PHT					
V 1750	Petrol	83	01/67-12/72	**ENGINE AR 00548**								
Engine	Information				A10	A20	A40	A50	A70	C10 - C30	C20	E01
All engines						1.2547						
GTV												
1.8 16V	Petrol	106	05/98-10/05	**ENGINE AR 32201**								
Engine	Information				A10	A20	A40	A50	A70	C10 - C30	C20	E01
All engines	x 4, SEMI-DIRECT									9.6287 C10		
All engines												4.9608
2.0 T.SPARK 16V	Petrol	110	06/95-10/05	**ENGINE AR 16201, AR 32310**								
Engine	Information				A10	A20	A40	A50	A70	C10 - C30	C20	E01
Eng. AR 16201	->year 01/08/98, x 4, SEMI-DIRECT									9.6286 C10		
Eng. AR 16201	01/09/98 ->, x 4, SEMI-DIRECT									9.6287 C10		
Eng. AR 32310	x 4, COIL ON PLUG									9.6297 C10		
Eng. AR 32310												4.9607
Eng. AR 16201												4.9608
2.0 T.SPARK 16V	Petrol	114	09/97-03/03	**ENGINE AR 32301**								
Engine	Information				A10	A20	A40	A50	A70	C10 - C30	C20	E01
All engines	x 4, SEMI-DIRECT									9.6287 C10		
All engines												4.9608
2.0 V6 Turbo	Petrol	148	06/95-09/98	**ENGINE AR 16202**								
Engine	Information				A10	A20	A40	A50	A70	C10 - C30	C20	E01
All engines	version Bosch						2.7530/6PHT	3.7573/19RS				
3.0 V6 24V	Petrol	160	10/00-10/05	**ENGINE AR 16105**								
Engine	Information				A10	A20	A40	A50	A70	C10 - C30	C20	E01
All engines	x 6, COIL ON PLUG									9.6213 C10		
3.0 V6 24V	Petrol	162	10/96-10/00	**ENGINE AR 16102**								
Engine	Information				A10	A20	A40	A50	A70	C10 - C30	C20	E01
All engines	x 6, COIL ON PLUG									9.6213 C10		
3.2 V6 24V	Petrol	176	04/03-10/05	**ENGINE 936 A6.000**								
Engine	Information				A10	A20	A40	A50	A70	C10 - C30	C20	E01
All engines	x 6, COIL ON PLUG									9.6213 C10		
MITO												
1.4	Petrol	51	05/11-10/18	**ENGINE 955 A9.000**								
Engine	Information				A10	A20	A40	A50	A70	C10 - C30	C20	E01
All engines	x 1, D.I.S.									9.6323 C10		
All engines												4.7170
1.4	Petrol	57	03/11->	**ENGINE 04Y, 350 A1.000**								
Engine	Information				A10	A20	A40	A50	A70	C10 - C30	C20	E01
Eng. 350 A1.000	x 1, D.I.S.									9.6323 C10		
All engines												4.7170

A10	CONDENSER	**A20**	CONTACT SET	**A40**	DISTRIBUTOR CAP	**A50**	ROTOR	**A70**	PICK-UP
C10	COIL	**C20**	IGNITION MODULE	**C30**	ELECTRONIC IGNITION KIT	**E01**	IGNITION CABLE SET		

The present application list is a brief version. For the detailed information about the possibility of installation on a specific vehicle, please refer to our web-catalogue http://catalogo.facet.eu/

Vehicle	alim.	kW	Date	Engine	FUNCTIONS ON THE VEHICLE A10	A20	A40	A50	A70	C10 - C30	C20	E01
1.4	Petrol	58	08/08-08/13	ENGINE 04Y, 955A1000								
Engine: Eng. 955A1000	Information: x 4, COIL ON PLUG, incl. spark plug connector									9.6342 C10		
Engine: Eng. 04Y												4.7170
1.4	Petrol	70	09/08-08/13	ENGINE 199 A6.000								
Engine: All engines	Information: x 4, COIL ON PLUG, incl. spark plug connector									9.6342 C10		
1.4 MultiAir	Petrol	125	09/09-10/18	ENGINE 940 A2.000								
Engine: All engines	Information: x 4, COIL ON PLUG									9.6449 C10		
1.4 TB	Petrol	103	12/13-10/18	ENGINE 955 B1.000								
Engine: All engines	Information: euro 6, euro5/euro6, x 4, COIL ON PLUG									9.6449 C10		
1.4 Turbo MultiAir	Petrol	120	10/09-10/18	ENGINE 955 A8.000								
Engine: All engines	Information: x 4, COIL ON PLUG									9.6449 C10		
1.4 Turbo MultiAir	Petrol	99	10/09-12/14	ENGINE 955 A2.000, 955 A7.000								
Engine: All engines	Information: x 4, COIL ON PLUG									9.6449 C10		
SPIDER I												
1.7	Petrol	80	04/68-11/71	ENGINE AR 10525								
Engine: All engines	Information:					1.2547						
1300	Petrol	64	01/68-12/77	ENGINE AR 00530								
Engine: All engines	Information:					1.2547						
1600	Petrol	76	03/76-12/90	ENGINE AR 00526								
Engine: All engines	Information: version Bosch						2.7479PHT	3.7555RS	8.2653			
1600	Petrol	79	01/90-12/93	ENGINE AR 01563								
Engine: All engines	Information: version Bosch						2.7479PHT	3.7555RS	8.2653			
1600	Petrol	80	03/66-12/68	ENGINE AR 00526, AR 00536, AR 01600								
Engine: All engines	Information:					1.2547						
1750	Petrol	83	01/67-12/71	ENGINE AR 00548								
Engine: All engines	Information:					1.2547						
2.0i [CAN]	Petrol	88	09/90-10/93	ENGINE AR 01588								
Engine: All engines	Information: version Bosch						2.7479PHT	3.7573/23RS				
2.0i [USA]	Petrol	88	09/90-10/93	ENGINE AR 01588								
Engine: All engines	Information: version Bosch						2.7479PHT	3.7573/23RS				

A10	CONDENSER	A20	CONTACT SET	A40	DISTRIBUTOR CAP	A50	ROTOR	A70	PICK-UP
C10	COIL	C20	IGNITION MODULE	C30	ELECTRONIC IGNITION KIT	E01	IGNITION CABLE SET		

The present application list is a brief version. For the detailed information about the possibility of installation on a specific vehicle, please refer to our web-catalogue http://catalogo.facet.eu/

Vehicle	alim.	kW	Date	Engine	FUNCTIONS ON THE VEHICLE							
					A10	A20	A40	A50	A70	C10 - C30	C20	E01
2.0i Veloce [CAN]	Petrol	88	09/90-10/93	AR 01588								
All engines	version Bosch						2.7479PHT	3.7573/23RS				
2.0i Veloce [USA]	Petrol	88	09/90-10/93	AR 01588								
All engines	version Bosch						2.7479PHT	3.7573/23RS				
2000	Petrol	85	08/86-12/90	AR 01544								
All engines	version Bosch						2.7479PHT	3.7555RS				
2000	Petrol	88	01/90-12/93	AR 01588								
All engines	version Bosch						2.7479PHT					
2000	Petrol	93	01/77-12/93	AR 01590								
All engines	version Bosch						2.7479PHT					
SPIDER II												
1.8 16V	Petrol	106	05/98-04/05	AR 32201								
All engines	x 4, SEMI-DIRECT									9.6287 C10		
All engines												4.9608
2.0 T.SPARK 16V	Petrol	110	06/95-04/05	AR 16201, AR 32310								
Eng. AR 16201	x 2, SEMI-DIRECT									9.6286 C10		
Eng. AR 32310	x 4, COIL ON PLUG									9.6297 C10		
Eng. AR 32310												4.9607
Eng. AR 16201												4.9608
2.0 T.SPARK 16V	Petrol	114	05/98-08/00	AR 32301								
All engines	x 4, SEMI-DIRECT									9.6287 C10		
All engines												4.9608
2.0 V6 Turbo	Petrol	148	05/98-04/05	AR 16202								
All engines	version Bosch						2.7530/6PHT	3.7573/19RS				
3.0 V6	Petrol	160	09/94-04/05	AR 16105								
All engines	x 6, COIL ON PLUG									9.6213 C10		
3.0 V6 24V	Petrol	162	01/99-10/03	AR 16102								
All engines	x 6, COIL ON PLUG									9.6213 C10		
3.2 V6 24V	Petrol	176	04/03-04/05	936 A6.000								
All engines	x 6, COIL ON PLUG									9.6213 C10		
SPIDER III												
1.8 TBi	Petrol	147	05/09-03/11	939 B1.000								
All engines	x 4, COIL ON PLUG									9.6449 C10		

A10	CONDENSER	A20	CONTACT SET	A40	DISTRIBUTOR CAP	A50	ROTOR	A70	PICK-UP	
C10	COIL	C20	IGNITION MODULE	C30	ELECTRONIC IGNITION KIT	E01	IGNITION CABLE SET			

The present application list is a brief version. For the detailed information about the possibility of installation on a specific vehicle, please refer to our web-catalogue http://catalogo.facet.eu/

Vehicle	alim.	kW	Date	Engine	FUNCTIONS ON THE VEHICLE							
					A10	A20	A40	A50	A70	C10 - C30	C20	E01

B6

				ENGINE
4.4 Biturbo 4x4 [USA]	Petrol	441	03/14->	N63 M20 A

Engine	Information	A10	A20	A40	A50	A70	C10 - C30		C20	E01
All engines	Qty: 8						9.6375	C10		

B7

				ENGINE
4.4 BiTurbo [USA]	Petrol	441	01/11->	N63 M20 A

Engine	Information	A10	A20	A40	A50	A70	C10 - C30		C20	E01
All engines	Qty: 8						9.6375	C10		

				ENGINE
4.4 BiTurbo 4x4 [USA]	Petrol	441	01/12->	N63 M20 A

Engine	Information	A10	A20	A40	A50	A70	C10 - C30		C20	E01
All engines	Qty: 8						9.6375	C10		

				ENGINE
BITURBO	Petrol	373	03/09-06/12	N63 M10 A

Engine	Information	A10	A20	A40	A50	A70	C10 - C30		C20	E01
All engines	Qty: 8						9.6375	C10		

				ENGINE
BITURBO Trazione integrale	Petrol	373	09/10-06/12	N63 M10 A

Engine	Information	A10	A20	A40	A50	A70	C10 - C30		C20	E01
All engines	Qty: 8						9.6375	C10		

A10	CONDENSER	A20	CONTACT SET	A40	DISTRIBUTOR CAP	A50	ROTOR	A70	PICK-UP
C10	COIL	C20	IGNITION MODULE	C30	ELECTRONIC IGNITION KIT	E01	IGNITION CABLE SET		

The present application list is a brief version. For the detailed information about the possibility of installation on a specific vehicle, please refer to our web-catalogue http://catalogo.facet.eu/

Vehicle	alim.	kW	Date	Engine	FUNCTIONS ON THE VEHICLE							
					A10	A20	A40	A50	A70	C10 - C30	C20	E01

V6

				ENGINE
GT	Petrol	116	01/85-12/90	**Z6W**

Engine	Information	A10	A20	A40	A50	A70	C10 - C30		C20	E01
All engines	version Bosch				3.7523RS					

				ENGINE
TURBO	Petrol	147	01/88-12/90	**Z7U 730, Z7U 732, Z7U 734**

Engine	Information	A10	A20	A40	A50	A70	C10 - C30		C20	E01
All engines	version Bosch			2.7530/6PHT	3.7573/19RS					
All engines							9.6007	C10		

A10	CONDENSER	**A20**	CONTACT SET	**A40**	DISTRIBUTOR CAP	**A50**	ROTOR	**A70**	PICK-UP
C10	COIL	**C20**	IGNITION MODULE	**C30**	ELECTRONIC IGNITION KIT	**E01**	IGNITION CABLE SET		

The present application list is a brief version. For the detailed information about the possibility of installation on a specific vehicle, please refer to our web-catalogue http://catalogo.facet.eu/

Vehicle	alim.	kW	Date	Engine	FUNCTIONS ON THE VEHICLE							
					A10	A20	A40	A50	A70	C10 - C30	C20	E01
CYGNET												
				ENGINE								
1.3	Petrol	72	04/11-10/13	1NR-FE								
Engine	Information											
All engines	x 4, COIL ON PLUG									9.6437 C10		
DB6												
				ENGINE								
4.0	Petrol	210	10/64-12/70	--, AJ6								
Engine	Information											
All engines						1.4683MHDV		3.8107				
				ENGINE								
4.0	Petrol	243	10/64-12/70	--, AJ6								
Engine	Information											
All engines						1.4683MHDV		3.8107				
DBS												
				ENGINE								
4.0	Petrol	210	01/66-12/72	--, AJ6								
Engine	Information											
All engines								3.8107				

A10	CONDENSER	A20	CONTACT SET	A40	DISTRIBUTOR CAP	A50	ROTOR	A70	PICK-UP
C10	COIL	C20	IGNITION MODULE	C30	ELECTRONIC IGNITION KIT	E01	IGNITION CABLE SET		

The present application list is a brief version. For the detailed information about the possibility of installation on a specific vehicle, please refer to our web-catalogue http://catalogo.facet.eu/

Vehicle	alim.	kW	Date	Engine	FUNCTIONS ON THE VEHICLE A10	A20	A40	A50	A70	C10 - C30	C20	E01

100 III

1.8 — Petrol — 55 — 08/82-12/87 — ENGINE: DR, RS

Engine	Information	A10	A20	A40	A50	A70	C10 - C30		C20	E01
Eng. DR	version Bosch			2.7479PHT	3.7555RS					
All engines					3.7521RS					
Eng. DR							9.6032	C10	9.4004	

1.8 — Petrol — 65 — 02/86-07/90 — ENGINE: SH

Engine	Information	A10	A20	A40	A50	A70	C10 - C30		C20	E01
All engines	version Bosch			2.7530/36PHT	3.7555RS	8.2719				
All engines							9.6027	C10	9.4007	4.8768

1.8 — Petrol — 66 — 08/83-12/90 — ENGINE: DS, JW, NP

Engine	Information	A10	A20	A40	A50	A70	C10 - C30		C20	E01
All engines	version Bosch			2.7529PHT	3.7555RS	8.2719				
Eng. NP	version Bosch			2.7530/36PHT						
Eng. DS, NP	version Ducellier			2.7668PHT	3.7699RS					
All engines					3.7521RS		9.6027	C10	9.4007	4.8768

1.8 Cat — Petrol — 66 — 03/85-11/90 — ENGINE: 4B, PH

Engine	Information	A10	A20	A40	A50	A70	C10 - C30		C20	E01
All engines	version Bosch			2.7530/36PHT	3.7555RS	8.2719				
All engines							9.6027	C10	9.4007	4.8768

1.8 Cat quattro — Petrol — 66 — 08/85-11/90 — ENGINE: 4B, PH

Engine	Information	A10	A20	A40	A50	A70	C10 - C30		C20	E01
Eng. 4B	version Bosch			2.7529PHT	3.7555RS	8.2719				
All engines							9.6027	C10		4.8768
Eng. 4B									9.4007	

1.8 quattro — Petrol — 65 — 08/86-07/90 — ENGINE: SH

Engine	Information	A10	A20	A40	A50	A70	C10 - C30		C20	E01
All engines	version Bosch			2.7529PHT	3.7555RS	8.2719				
All engines	version Ducellier			2.7668PHT	3.7699RS					
All engines							9.6027	C10	9.4007	4.8768

1.8 quattro — Petrol — 66 — 10/84-07/88 — ENGINE: JW, NP

Engine	Information	A10	A20	A40	A50	A70	C10 - C30		C20	E01
Eng. NP	version Bosch			2.7529PHT	3.7555RS	8.2719				
Eng. NP	version Ducellier			2.7668PHT	3.7699RS					
All engines					3.7521RS					
Eng. NP							9.6027	C10	9.4007	4.8768

1.9 — Petrol — 74 — 08/82-07/84 — ENGINE: WH

Engine	Information	A10	A20	A40	A50	A70	C10 - C30		C20	E01
All engines	version Bosch			2.7493PHT	3.7559RS					
All engines							9.6032	C10	9.4004	

2.0 — Petrol — 85 — 08/84-12/87 — ENGINE: KP

Engine	Information	A10	A20	A40	A50	A70	C10 - C30		C20	E01
All engines	version Bosch			2.7530/1PHT						
All engines	ch. 44-G-000 001 ->, version Bosch				3.7555RS					
All engines	->ch. 44-F-300 000, version Bosch				3.7573/16RS					
All engines	->ch. 44-F-300 000						9.6025	C10		
All engines	ch. 44-G-000 001 ->						9.6027	C10		
All engines									9.4007	4.9682

2.0 Cat — Petrol — 85 — 01/88-11/90 — ENGINE: RT

Engine	Information	A10	A20	A40	A50	A70	C10 - C30		C20	E01
All engines	version Bosch			2.7530/1PHT						
All engines	version Bosch, distr. num. 034 905 206				3.7555RS	8.2719				

A10	CONDENSER	A20	CONTACT SET	A40	DISTRIBUTOR CAP	A50	ROTOR	A70	PICK-UP
C10	COIL	C20	IGNITION MODULE	C30	ELECTRONIC IGNITION KIT	E01	IGNITION CABLE SET		

The present application list is a brief version. For the detailed information about the possibility of installation on a specific vehicle, please refer to our web-catalogue http://catalogo.facet.eu/

Vehicle	alim.	kW	Date	Engine	FUNCTIONS ON THE VEHICLE A10	A20	A40	A50	A70	C10 - C30	C20	E01
2.0 Cat	Petrol	85	01/88-11/90	**RT**								
All engines	version Bosch, distr. num. 034 905 205 H							3.7573/21RS				
All engines												4.9682
2.0 E	Petrol	85	01/85-12/87	**KP**								
All engines	version Bosch						2.7530/1PHT					
All engines	ch. 44-G-000 001 ->, version Bosch							3.7555RS				
All engines	->ch. 44-F-300 000, version Bosch							3.7573/16RS				
All engines	->ch. 44-F-300 000									9.6025 C10		
All engines	ch. 44-G-000 001 ->									9.6027 C10		
All engines											9.4007	4.9682
2.0 E Cat	Petrol	85	01/88-11/90	**RT**								
All engines	version Bosch						2.7530/1PHT					
All engines	version Bosch, distr. num. 034 905 206							3.7555RS	8.2719			
All engines	version Bosch, distr. num. 034 905 205 H							3.7573/21RS				
All engines												4.9682
2.2	Petrol	85	10/84-09/86	**KZ**								
All engines	version Bosch						2.7493PHT					
All engines	01/01/84 ->, version Bosch							3.7559RS				
All engines	->year 01/01/84, version Bosch							3.7573/16RS				
All engines										9.6025 C10	9.4004	
2.2 Cat	Petrol	101	06/89-11/90	**KU**								
All engines	version Bosch						2.7530/1PHT	3.7555RS				
All engines										9.6027 C10	9.4007	4.9682
2.2 Cat quattro	Petrol	101	06/89-11/90	**KU**								
All engines	version Bosch						2.7530/1PHT	3.7555RS				
All engines										9.6027 C10	9.4007	4.9682
2.2 E Turbo quattro	Petrol	121	08/86-11/90	**MC**								
All engines	version Bosch						2.7530/1PHT	3.7573/21RS				
All engines												4.9682
2.2 Turbo	Petrol	121	08/86-11/90	**MC**								
All engines	version Bosch						2.7530/1PHT	3.7573/21RS				
All engines												4.9682
2.2 Turbo quattro	Petrol	121	08/86-11/90	**MC**								
All engines												4.9682
2.3	Petrol	100	08/86-11/90	**NF**								
All engines	version Bosch						2.7530/1PHT	3.7573/21RS				
All engines												4.9682
2.3	Petrol	98	03/90-11/90	**NF**								
All engines	version Bosch						2.7530/1PHT	3.7573/21RS				
All engines												4.9682

A10	CONDENSER	**A20**	CONTACT SET	**A40**	DISTRIBUTOR CAP	**A50**	ROTOR	**A70**	PICK-UP
C10	COIL	**C20**	IGNITION MODULE	**C30**	ELECTRONIC IGNITION KIT	**E01**	IGNITION CABLE SET		

The present application list is a brief version. For the detailed information about the possibility of installation on a specific vehicle, please refer to our web-catalogue http://catalogo.facet.eu/

FUNCTIONS ON THE VEHICLE

Vehicle	alim.	kW	Date	Engine	A10	A20	A40	A50	A70	C10 - C30	C20	E01
2.3 E	Petrol	100	10/86-11/90	ENGINE NF								
Engine			Information		A10	A20	A40	A50	A70	C10 - C30	C20	E01
All engines			version Bosch				2.7530/1PHT	3.7573/21RS				
All engines												4.9682
2.3 E	Petrol	98	01/90-11/90	ENGINE NF								
Engine			Information		A10	A20	A40	A50	A70	C10 - C30	C20	E01
All engines			version Bosch				2.7530/1PHT	3.7573/21RS				
All engines												4.9682
2.3 E quattro	Petrol	100	08/86-11/90	ENGINE NF								
Engine			Information		A10	A20	A40	A50	A70	C10 - C30	C20	E01
All engines			version Bosch				2.7530/1PHT	3.7573/21RS				
All engines												4.9682
2.3 quattro	Petrol	98	01/90-11/90	ENGINE NF								
Engine			Information		A10	A20	A40	A50	A70	C10 - C30	C20	E01
All engines			version Bosch				2.7530/1PHT	3.7573/21RS				
All engines												4.9682
100 IV												
1.6	Petrol	75	03/92-07/93	ENGINE ABB								
Engine			Information		A10	A20	A40	A50	A70	C10 - C30	C20	E01
All engines			version Bosch				2.7530/36PHT	3.7555RS				
All engines										9.6027 C10	9.4007	4.8768
2.0	Petrol	74	12/90-07/94	ENGINE AAE								
Engine			Information		A10	A20	A40	A50	A70	C10 - C30	C20	E01
All engines			version Bosch				2.7530/36PHT	3.7573/21RS				
All engines												4.8768
2.0 E	Petrol	74	09/91-07/94	ENGINE AAE								
Engine			Information		A10	A20	A40	A50	A70	C10 - C30	C20	E01
All engines			version Bosch				2.7530/36PHT	3.7573/21RS				
All engines												4.8768
2.0 E	Petrol	85	12/90-07/94	ENGINE AAD, ABK								
Engine			Information		A10	A20	A40	A50	A70	C10 - C30	C20	E01
All engines			version Bosch, version Bosch				2.7530/36PHT					
All engines			version Bosch					3.7573/21RS				
All engines												4.8768
2.0 E 16V	Petrol	103	01/92-07/94	ENGINE ACE								
Engine			Information		A10	A20	A40	A50	A70	C10 - C30	C20	E01
All engines			version Bosch				2.7530/18PHT					
All engines												4.9356
2.0 E 16V quattro	Petrol	103	07/92-07/94	ENGINE ACE								
Engine			Information		A10	A20	A40	A50	A70	C10 - C30	C20	E01
All engines			version Bosch				2.7530/18PHT					
All engines												4.9356
2.0 E quattro	Petrol	85	12/90-07/92	ENGINE AAD								
Engine			Information		A10	A20	A40	A50	A70	C10 - C30	C20	E01
All engines			version Bosch				2.7494PHT	3.7573/21RS				
All engines												4.8768
2.3 E	Petrol	98	12/90-07/94	ENGINE 7M15A-FKS								
Engine			Information		A10	A20	A40	A50	A70	C10 - C30	C20	E01
All engines			version Bosch				2.7530/1PHT	3.7573/21RS				
All engines												4.9682

A10	CONDENSER	A20	CONTACT SET	A40	DISTRIBUTOR CAP	A50	ROTOR	A70	PICK-UP
C10	COIL	C20	IGNITION MODULE	C30	ELECTRONIC IGNITION KIT	E01	IGNITION CABLE SET		

The present application list is a brief version. For the detailed information about the possibility of installation on a specific vehicle, please refer to our web-catalogue http://catalogo.facet.eu/

Vehicle	alim.	kW	Date	Engine	FUNCTIONS ON THE VEHICLE A10	A20	A40	A50	A70	C10 - C30	C20	E01
2.3 E quattro	Petrol	98	12/90-07/94	**7M15A-FKS**								
All engines	version Bosch						2.7530/1PHT	3.7573/21RS				
All engines												4.9682
2.6	Petrol	102	07/93-07/94	**ACZ**								
All engines											9.4051	
2.6	Petrol	110	03/92-07/94	**ABC**								
All engines											9.4051	
2.6 E quattro	Petrol	102	08/93-07/94	**ACZ**								
All engines											9.4051	
2.6 quattro	Petrol	110	04/92-07/94	**ABC**								
All engines											9.4051	
2.8 E	Petrol	128	12/90-07/94	**AAH**								
All engines											9.4051	
2.8 E quattro	Petrol	128	12/90-07/94	**AAH**								
All engines											9.4051	
200 II												
2.2	Petrol	101	08/84-07/85	**KU**								
All engines	version Bosch						2.7530/1PHT	3.7559RS				
All engines										9.6025 C10	9.4004	
2.2 Turbo	Petrol	121	08/85-09/91	**MC**								
All engines	version Bosch						2.7530/1PHT	3.7573/21RS				
2.2 Turbo	Petrol	147	02/88-12/90	**1B**								
All engines	version Bosch						2.7530/1PHT	3.7573/21RS				
2.2 Turbo quattro	Petrol	121	01/85-12/91	**MC**								
All engines	version Bosch						2.7530/1PHT					
All engines	01/01/86 ->, version Bosch							3.7555RS				
All engines	->year 01/01/86, version Bosch							3.7559RS				
All engines										9.6026 C10		
2.2 Turbo quattro	Petrol	147	02/88-11/90	**1B**								
All engines	version Bosch						2.7530/1PHT	3.7573/21RS				
80 II												
1.3	Petrol	44	09/78-07/86	**EP**								
All engines	version Bosch						2.7494PHT	3.7555RS	8.2719			
All engines	->ch. 81-F-220 000									9.6025 C10		
All engines	ch. 81-G-000 001 ->									9.6027 C10		

A10	CONDENSER	**A20**	CONTACT SET	**A40**	DISTRIBUTOR CAP	**A50**	ROTOR	**A70**	PICK-UP
C10	COIL	**C20**	IGNITION MODULE	**C30**	ELECTRONIC IGNITION KIT	**E01**	IGNITION CABLE SET		

The present application list is a brief version. For the detailed information about the possibility of installation on a specific vehicle, please refer to our web-catalogue http://catalogo.facet.eu/

Vehicle	alim.	kW	Date	Engine	FUNCTIONS ON THE VEHICLE A10	A20	A40	A50	A70	C10 - C30	C20	E01

80 II

				ENGINE
1.3	Petrol	44	09/78-07/86	EP

Engine	Information	A10	A20	A40	A50	A70	C10 - C30		C20	E01
All engines									9.4007	4.8768

				ENGINE
1.6	Petrol	54	02/86-07/86	SA

Engine	Information	A10	A20	A40	A50	A70	C10 - C30		C20	E01
All engines	version Bosch			2.7530/36PHT	3.7555RS	8.2719				
All engines	->ch. 81-F-220 000						9.6025	C10		
All engines	ch. 81-G-000 001 ->						9.6027	C10		
All engines									9.4007	4.8768

				ENGINE
1.6	Petrol	55	08/78-03/87	DT, JU, WV

Engine	Information	A10	A20	A40	A50	A70	C10 - C30		C20	E01
Eng. WV	version Bosch, ->year 01/01/85			2.7479PHT						
All engines	version Bosch, 01/01/85 ->			2.7494PHT						
Eng. DT	version Ducellier			2.7668PHT	3.7699RS					
All engines	version Bosch				3.7555RS					
All engines	version Bosch, 01/01/83 ->, ->year 01/01/85					8.2719				
Eng. WV	version Bosch, 01/01/85 ->					8.2731				
All engines	01/01/85 ->, ->ch. 81-F-220 000						9.6025	C10		
Eng. DT, JU	ch. 81-G-000 001 ->						9.6027	C10		
Eng. WV	->year 01/01/85						9.6032	C10		
Eng. WV									9.4004	
Eng. DT, JU									9.4007	
All engines										4.8768

				ENGINE
1.8	Petrol	65	02/86-07/86	SF

Engine	Information	A10	A20	A40	A50	A70	C10 - C30		C20	E01
All engines	version Bosch			2.7530/36PHT	3.7555RS	8.2719				
All engines	->ch. 81-F-220 000						9.6025	C10		
All engines	ch. 81-G-000 001 ->						9.6027	C10		
All engines									9.4007	4.8768

				ENGINE
1.8	Petrol	66	01/83-08/86	DS

Engine	Information	A10	A20	A40	A50	A70	C10 - C30		C20	E01
All engines	version Bosch			2.7494PHT	3.7555RS	8.2719				
All engines	version Ducellier			2.7668PHT	3.7699RS					
All engines	->ch. 81-F-220 000						9.6025	C10		
All engines	ch. 81-G-000 001 ->						9.6027	C10		
All engines									9.4007	4.8768

				ENGINE
1.8	Petrol	68	08/83-08/86	JN

Engine	Information	A10	A20	A40	A50	A70	C10 - C30		C20	E01
All engines	version Bosch			2.7494PHT	3.7555RS	8.2719				
All engines	->ch. 81-F-220 000						9.6025	C10		
All engines	ch. 81-G-000 001 ->						9.6027	C10		
All engines									9.4007	4.8768

				ENGINE
1.8 CC quattro	Petrol	66	08/84-08/86	JV

Engine	Information	A10	A20	A40	A50	A70	C10 - C30		C20	E01
All engines	ch. 81-G-000 001 ->, version Bosch			2.7494PHT						
All engines	->ch. 81-F-220 000, version Bosch				3.7555RS					
All engines	version Bosch					8.2719				
All engines	->ch. 81-F-220 000						9.6025	C10		
All engines	ch. 81-G-000 001 ->						9.6027	C10		
All engines									9.4007	4.8768

				ENGINE
1.8 CC quattro	Petrol	68	08/85-08/86	JN

Engine	Information	A10	A20	A40	A50	A70	C10 - C30		C20	E01
All engines	version Bosch			2.7494PHT	3.7555RS	8.2719				
All engines	->ch. 81-F-220 000						9.6025	C10		

A10	CONDENSER	A20	CONTACT SET	A40	DISTRIBUTOR CAP	A50	ROTOR	A70	PICK-UP
C10	COIL	C20	IGNITION MODULE	C30	ELECTRONIC IGNITION KIT	E01	IGNITION CABLE SET		

The present application list is a brief version. For the detailed information about the possibility of installation on a specific vehicle, please refer to our web-catalogue http://catalogo.facet.eu/

Vehicle	alim.	kW	Date	Engine	FUNCTIONS ON THE VEHICLE A10	A20	A40	A50	A70	C10 - C30	C20	E01

1.8 CC quattro | Petrol | 68 | 08/85-08/86 | ENGINE: JN

Engine	Information	A10	A20	A40	A50	A70	C10 - C30		C20	E01
All engines	ch. 81-G-000 001 ->						9.6027	C10		
All engines									9.4007	4.8768

1.8 GTE | Petrol | 81 | 08/85-07/86 | ENGINE: PV

Engine	Information	A10	A20	A40	A50	A70	C10 - C30		C20	E01
All engines	version Bosch			2.7530/36PHT	3.7573/21RS					
All engines	->ch. 81-F-220 000						9.6025	C10		
All engines	ch. 81-G-000 001 ->						9.6027	C10		
All engines									9.4007	4.8768

1.8 GTE | Petrol | 82 | 06/84-03/87 | ENGINE: DZ, MU

Engine	Information	A10	A20	A40	A50	A70	C10 - C30		C20	E01
Eng. DZ	->ch. 81-F-220 000, version Bosch			2.7494PHT	3.7573/16RS					
All engines	ch. 81-G-000 001 ->, version Bosch			2.7530/36PHT	3.7555RS	8.2719				
All engines	->ch. 81-F-220 000						9.6025	C10		
All engines	ch. 81-G-000 001 ->						9.6027	C10		
All engines									9.4007	4.8768

2.0 | Petrol | 85 | 10/83-09/84 | ENGINE: HP, JS

Engine	Information	A10	A20	A40	A50	A70	C10 - C30		C20	E01
All engines	version Bosch			2.7530/1PHT						
All engines	ch. 81-G-000 001 ->, version Bosch				3.7555RS					
All engines	->ch. 81-F-220 000, version Bosch				3.7573/16RS					
Eng. JS	version Bosch					8.2719				
All engines	->ch. 81-F-220 000						9.6025	C10		
All engines	ch. 81-G-000 001 ->						9.6027	C10		
All engines									9.4007	4.9682

2.0 quattro | Petrol | 85 | 10/83-09/84 | ENGINE: JS

Engine	Information	A10	A20	A40	A50	A70	C10 - C30		C20	E01
All engines	version Bosch			2.7530/1PHT		8.2719				
All engines	ch. 81-G-000 001 ->, version Bosch				3.7555RS					
All engines	->ch. 81-F-220 000, version Bosch				3.7573/16RS					
All engines	->ch. 81-F-220 000						9.6025	C10		
All engines	ch. 81-G-000 001 ->						9.6027	C10		
All engines									9.4007	4.9682

80 III

1.4 | Petrol | 48 | 08/86-07/88 | ENGINE: SE

Engine	Information	A10	A20	A40	A50	A70	C10 - C30		C20	E01
All engines	version Bosch			2.7530/36PHT	3.7555RS	8.2719				
All engines	version Ducellier			2.7668PHT	3.7699RS					
All engines							9.6027	C10	9.4007	4.8768

1.6 | Petrol | 51 | 09/86-09/91 | ENGINE: PP, RNA

Engine	Information	A10	A20	A40	A50	A70	C10 - C30		C20	E01
All engines	version Bosch			2.7530/36PHT	3.7555RS	8.2719				
All engines	version Ducellier			2.7668PHT	3.7699RS					
All engines							9.6027	C10	9.4007	4.8768

1.6 | Petrol | 55 | 09/86-08/91 | ENGINE: RN

Engine	Information	A10	A20	A40	A50	A70	C10 - C30		C20	E01
All engines	version Bosch			2.7530/36PHT	3.7555RS	8.2719				
All engines	version Ducellier			2.7668PHT	3.7699RS					
All engines							9.6027	C10	9.4007	4.8768

1.6 | Petrol | 75 | 08/90-10/91 | ENGINE: ABB

Engine	Information	A10	A20	A40	A50	A70	C10 - C30		C20	E01
All engines	version Bosch			2.7530/36PHT	3.7555RS					

A10	CONDENSER	A20	CONTACT SET	A40	DISTRIBUTOR CAP	A50	ROTOR	A70	PICK-UP
C10	COIL	C20	IGNITION MODULE	C30	ELECTRONIC IGNITION KIT	E01	IGNITION CABLE SET		

The present application list is a brief version. For the detailed information about the possibility of installation on a specific vehicle, please refer to our web-catalogue http://catalogo.facet.eu/

Vehicle	alim.	kW	Date	Engine	FUNCTIONS ON THE VEHICLE							
					A10	A20	A40	A50	A70	C10 - C30	C20	E01
1.6	Petrol	75	08/90-10/91	ENGINE ABB								
Engine: All engines	Information: version Bosch, MODEL TO: 1991								8.2719			
Engine: All engines										9.6027 C10	9.4007	4.8768
1.8	Petrol	55	10/86-01/90	ENGINE RU								
Engine: All engines	Information: version Bosch						2.7530/36PHT	3.7555RS	8.2719			
Engine: All engines	Information: version Ducellier						2.7668PHT	3.7699RS				
Engine: All engines										9.6027 C10	9.4007	4.8768
1.8	Petrol	83	09/86-07/88	ENGINE SD								
Engine: All engines	Information: version Bosch						2.7530/36PHT	3.7573/21RS				
Engine: All engines										9.6027 C10	9.4007	4.8768
1.8 E	Petrol	82	06/86-08/91	ENGINE DZ								
Engine: All engines	Information: version Bosch						2.7530/36PHT	3.7555RS	8.2719			
Engine: All engines										9.6027 C10	9.4007	4.8768
1.8 E quattro	Petrol	82	09/86-08/91	ENGINE DZ								
Engine: All engines	Information:									9.6027 C10		4.8768
1.8 quattro	Petrol	83	09/86-08/90	ENGINE SD								
Engine: All engines	Information: version Bosch						2.7529PHT	3.7573/21RS	8.2731			
Engine: All engines										9.6027 C10	9.4004	4.8768
1.8 S	Petrol	65	08/86-01/90	ENGINE SF								
Engine: All engines	Information: version Bosch						2.7530/36PHT	3.7555RS	8.2719			
Engine: All engines										9.6027 C10	9.4007	4.8768
1.8 S	Petrol	66	09/86-10/91	ENGINE JN, JV, NE, PM								
Engine: All engines	Information: version Bosch						2.7530/36PHT					
Engine: Eng. NE	Information: version Ducellier						2.7668PHT	3.7699RS				
Engine: All engines	Information: ->ch. 8A-L-500000, version Bosch							3.7555RS	8.2719			
Engine: Eng. PM	Information: ch. 8A-M-000001 ->, version Bosch							3.7573/21RS				
Engine: All engines	Information: ->ch. 8A-L-500000									9.6027 C10		
Engine: All engines											9.4007	4.8768
1.8 S quattro	Petrol	65	09/86-07/90	ENGINE SF								
Engine: All engines	Information:									9.6027 C10		4.8768
1.8 S quattro	Petrol	66	09/86-09/91	ENGINE JN, NE, PM								
Engine: Eng. JN	Information: version Bosch						2.7529PHT	3.7555RS	8.2731			
Engine: All engines	Information:									9.6027 C10		4.8768
Engine: Eng. JN	Information:										9.4004	
2.0	Petrol	82	10/90-08/91	ENGINE AAD								
Engine: All engines	Information: version Bosch						2.7530/36PHT	3.7573/21RS				
Engine: All engines	Information:									9.6027 C10	9.4007	4.8768

A10	CONDENSER	A20	CONTACT SET	A40	DISTRIBUTOR CAP	A50	ROTOR	A70	PICK-UP
C10	COIL	C20	IGNITION MODULE	C30	ELECTRONIC IGNITION KIT	E01	IGNITION CABLE SET		

The present application list is a brief version. For the detailed information about the possibility of installation on a specific vehicle, please refer to our web-catalogue http://catalogo.facet.eu/

Vehicle	alim.	kW	Date	Engine	FUNCTIONS ON THE VEHICLE A10	A20	A40	A50	A70	C10 - C30	C20	E01
2.0 E	Petrol	83	08/88-10/90	ENGINE 3A								
All engines	version Bosch						2.7530/36PHT	3.7573/21RS				
All engines											9.4007	4.8768
2.0 E 16V	Petrol	101	03/90-09/91	ENGINE 6A								
All engines	version Bosch						2.7530/18PHT					
All engines											9.4007	
2.0 E 16V quattro	Petrol	101	03/90-08/91	ENGINE 6A								
All engines	version Bosch						2.7530/18PHT					
2.0 E quattro	Petrol	83	08/88-09/90	ENGINE 3A								
All engines	version Bosch						2.7529PHT	3.7573/21RS				
All engines												4.8768
2.0 quattro	Petrol	82	08/88-07/90	ENGINE 3A								
All engines												4.8768
2.0 quattro	Petrol	85	10/90-08/91	ENGINE AAD								
All engines												4.8768
80 IV												
1.6	Petrol	52	09/91-12/94	ENGINE ABM								
All engines	version Bosch						2.7530/36PHT	3.7573/21RS				
All engines												4.8768
1.6	Petrol	75	03/92-05/93	ENGINE ABB								
All engines	version Bosch						2.7530/36PHT	3.7555RS				
All engines										9.6027 C10	9.4007	4.8768
1.6 E	Petrol	74	06/93-01/96	ENGINE ADA								
All engines	version Bosch						2.7530/36PHT	3.7573/21RS	8.2723			
All engines												4.8768
2.0	Petrol	66	09/91-01/96	ENGINE ABT								
All engines	version Bosch						2.7530/36PHT	3.7573/21RS				
All engines												4.8768
2.0 E	Petrol	85	09/91-01/96	ENGINE ABK								
All engines	version Bosch						2.7530/36PHT	3.7573/21RS				
All engines	->year 01/07/93									9.8114 C30		
All engines												4.8768
2.0 E 16V	Petrol	101	09/91-07/92	ENGINE 6A								
All engines	version Bosch						2.7530/18PHT					

A10	CONDENSER	**A20**	CONTACT SET	**A40**	DISTRIBUTOR CAP	**A50**	ROTOR	**A70**	PICK-UP
C10	COIL	**C20**	IGNITION MODULE	**C30**	ELECTRONIC IGNITION KIT	**E01**	IGNITION CABLE SET		

The present application list is a brief version. For the detailed information about the possibility of installation on a specific vehicle, please refer to our web-catalogue http://catalogo.facet.eu/

Vehicle	alim.	kW	Date	Engine	FUNCTIONS ON THE VEHICLE A10	A20	A40	A50	A70	C10 - C30	C20	E01
2.0 E 16V	Petrol	103	08/92-01/96	ACE								

Engine	Information	A10	A20	A40	A50	A70	C10 - C30	C20	E01
All engines	version Bosch			2.7530/18PHT					

2.0 E quattro	Petrol	85	09/91-12/94	ABK								

Engine	Information	A10	A20	A40	A50	A70	C10 - C30	C20	E01
All engines	version Bosch			2.7494PHT	3.7573/21RS				
All engines	->ch. 8C-P-300 000						9.8114 C30		
All engines									4.8768

2.0 quattro	Petrol	79	11/93-01/96	ADW								

Engine	Information	A10	A20	A40	A50	A70	C10 - C30	C20	E01
All engines	version Bosch			2.7530/36PHT	3.7573/21RS				
All engines									4.8768

2.3 E	Petrol	98	09/91-01/96	NG								

Engine	Information	A10	A20	A40	A50	A70	C10 - C30	C20	E01
All engines	version Bosch			2.7530/1PHT	3.7573/21RS				
All engines									4.9682

2.3 E quattro	Petrol	98	09/91-12/94	NG								

Engine	Information	A10	A20	A40	A50	A70	C10 - C30	C20	E01
All engines				2.7530/1PHT	3.7573/21RS				4.9682

2.6	Petrol	110	07/92-01/96	ABC								

Engine	Information	A10	A20	A40	A50	A70	C10 - C30	C20	E01
All engines								9.4051	

2.6 E	Petrol	102	05/93-05/95	ACZ								

Engine	Information	A10	A20	A40	A50	A70	C10 - C30	C20	E01
All engines								9.4051	

2.6 E quattro	Petrol	102	11/93-05/95	ACZ								

Engine	Information	A10	A20	A40	A50	A70	C10 - C30	C20	E01
All engines								9.4051	

2.6 quattro	Petrol	102	08/94-01/96	ACZ								

Engine	Information	A10	A20	A40	A50	A70	C10 - C30	C20	E01
All engines								9.4051	

2.6 quattro	Petrol	110	06/92-07/95	ABC								

Engine	Information	A10	A20	A40	A50	A70	C10 - C30	C20	E01
All engines								9.4051	

2.8	Petrol	128	09/91-01/96	AAH								

Engine	Information	A10	A20	A40	A50	A70	C10 - C30	C20	E01
All engines								9.4051	

2.8 quattro	Petrol	128	09/91-07/95	AAH								

Engine	Information	A10	A20	A40	A50	A70	C10 - C30	C20	E01
All engines								9.4051	

90 I

1.8	Petrol	66	06/84-03/87	JN								

Engine	Information	A10	A20	A40	A50	A70	C10 - C30	C20	E01
All engines	version Bosch			2.7494PHT	3.7555RS	8.2719			
All engines	->ch. 81-F-220 000						9.6025 C10		
All engines	ch. 81-G-000 001 ->						9.6027 C10		
All engines								9.4007	4.8768

A10 CONDENSER	A20 CONTACT SET	A40 DISTRIBUTOR CAP	A50 ROTOR	A70 PICK-UP
C10 COIL	C20 IGNITION MODULE	C30 ELECTRONIC IGNITION KIT	E01 IGNITION CABLE SET	

The present application list is a brief version. For the detailed information about the possibility of installation on a specific vehicle, please refer to our web-catalogue http://catalogo.facet.eu/

Vehicle	alim.	kW	Date	Engine	FUNCTIONS ON THE VEHICLE							
					A10	A20	A40	A50	A70	C10 - C30	C20	E01
2.0	Petrol	81	10/84-03/87	ENGINE JL								
All engines	version Bosch						2.7530/1PHT	3.7555RS	8.2719			
All engines	->ch. 81-F-220 000									9.6025 C10		
All engines	ch. 81-G-000 001 ->									9.6027 C10		
All engines											9.4007	4.9682
2.0	Petrol	83	03/86-03/87	ENGINE SK								
All engines	version Bosch						2.7530/1PHT	3.7573/21RS				
All engines	->ch. 81-F-220 000									9.6025 C10		
All engines	ch. 81-G-000 001 ->									9.6027 C10		
All engines											9.4007	4.9682
2.0	Petrol	85	10/84-03/87	ENGINE HP, JS								
All engines	version Bosch						2.7530/1PHT					
All engines	ch. 81-G-000 001 ->, version Bosch							3.7555RS				
All engines	->ch. 81-F-220 000, version Bosch							3.7573/16RS				
Eng. JS	version Bosch								8.2719			
All engines	->ch. 81-F-220 000									9.6025 C10		
All engines	ch. 81-G-000 001 ->									9.6027 C10		
All engines											9.4007	4.9682
2.0 quattro	Petrol	85	08/84-08/86	ENGINE JS								
All engines	version Bosch						2.7530/1PHT		8.2719			
All engines	ch. 81-G-000 001 ->, version Bosch							3.7555RS				
All engines	->ch. 81-F-220 000, version Bosch							3.7573/16RS				
All engines	->ch. 81-F-220 000									9.6025 C10		
All engines	ch. 81-G-000 001 ->									9.6027 C10		
All engines											9.4007	4.9682
2.2	Petrol	100	10/84-03/87	ENGINE 9C54, HY								
All engines	version Bosch						2.7530/1PHT	3.7573/16RS				
Eng. 9C54	version Bosch								8.2719			
All engines	->ch. 81-F-220 000									9.6025 C10		
All engines	ch. 81-G-000 001 ->									9.6027 C10		
All engines											9.4007	4.9682
2.2	Petrol	85	01/85-03/87	ENGINE KX								
All engines	version Bosch						2.7530/1PHT	3.7555RS	8.2719			
All engines	->ch. 81-F-220 000									9.6025 C10		
All engines	ch. 81-G-000 001 ->									9.6027 C10		
All engines											9.4007	
2.2 E quattro	Petrol	100	11/84-03/87	ENGINE 9C54								
All engines	version Bosch						2.7530/1PHT	3.7573/16RS	8.2719			
All engines	->ch. 81-F-220 000									9.6025 C10		
All engines	ch. 81-G-000 001 ->									9.6027 C10		
All engines											9.4007	4.9682
90 II												
2.0	Petrol	85	07/88-09/91	ENGINE PS								
All engines	version Bosch						2.7530/1PHT					
All engines	version Bosch, distr. num. 034 905 206							3.7555RS	8.2719			
All engines	version Bosch, distr. num. 034 905 205 H							3.7573/21RS				
All engines	-catalytic converter									9.6027 C10		

A10	CONDENSER	A20	CONTACT SET	A40	DISTRIBUTOR CAP	A50	ROTOR	A70	PICK-UP
C10	COIL	C20	IGNITION MODULE	C30	ELECTRONIC IGNITION KIT	E01	IGNITION CABLE SET		

The present application list is a brief version. For the detailed information about the possibility of installation on a specific vehicle, please refer to our web-catalogue http://catalogo.facet.eu/

Vehicle	alim.	kW	Date	Engine	FUNCTIONS ON THE VEHICLE A10	A20	A40	A50	A70	C10 - C30	C20	E01
90 II												
2.0	Petrol	85	07/88-09/91	ENGINE PS								
Engine: All engines	Information:										9.4007	4.9682
2.0 20 V	Petrol	118	08/89-07/91	ENGINE NM								
Engine: All engines	Information:										9.4007	
2.0 20 V quattro	Petrol	118	08/88-09/91	ENGINE NM								
Engine: All engines	Information: version Bosch						2.7530/1PHT					
2.2 E	Petrol	100	04/87-07/91	ENGINE 9C54								
Engine: All engines	Information: version Bosch						2.7530/1PHT	3.7555RS	8.2719			
Engine: All engines	Information:									9.6027 C10	9.4007	4.9682
2.2 E quattro	Petrol	100	04/87-09/91	ENGINE 9C54								
Engine: All engines	Information: version Bosch						2.7530/1PHT	3.7555RS	8.2719			
Engine: All engines	Information: ->ch. 81-F-220 000									9.6025 C10		
Engine: All engines	Information: ch. 81-G-000 001 ->									9.6027 C10		
Engine: All engines	Information:										9.4004	4.9682
2.3 E	Petrol	100	04/87-07/91	ENGINE NG								
Engine: All engines	Information: version Bosch						2.7530/1PHT	3.7573/21RS				
Engine: All engines	Information:										9.4007	4.9682
2.3 E	Petrol	98	04/87-09/91	ENGINE NG								
Engine: All engines	Information: version Bosch						2.7530/1PHT	3.7573/21RS				
Engine: All engines	Information:										9.4007	4.9682
2.3 E 20V	Petrol	123	04/90-07/91	ENGINE 7A								
Engine: All engines	Information:										9.4007	
2.3 E 20V	Petrol	125	08/88-07/91	ENGINE 7A								
Engine: All engines	Information:										9.4007	
2.3 E 20V quattro	Petrol	125	06/88-09/91	ENGINE 7A								
Engine: All engines	Information: version Bosch						2.7530/1PHT	3.7573/21RS				
2.3 E quattro	Petrol	100	04/87-07/91	ENGINE NG								
Engine: All engines	Information:											4.9682
2.3 E quattro	Petrol	98	04/87-09/91	ENGINE NG								
Engine: All engines	Information: version Bosch						2.7530/1PHT	3.7573/21RS				
Engine: All engines	Information:											4.9682
90 SUPER												
1.8	Petrol	66	09/66-08/71	ENGINE 21, 8921								
Engine: All engines	Information:					1.2529HDV						

A10	CONDENSER	**A20**	CONTACT SET	**A40**	DISTRIBUTOR CAP	**A50**	ROTOR	**A70**	PICK-UP
C10	COIL	**C20**	IGNITION MODULE	**C30**	ELECTRONIC IGNITION KIT	**E01**	IGNITION CABLE SET		

The present application list is a brief version. For the detailed information about the possibility of installation on a specific vehicle, please refer to our web-catalogue http://catalogo.facet.eu/

Vehicle	alim.	kW	Date	Engine	FUNCTIONS ON THE VEHICLE							
					A10	A20	A40	A50	A70	C10 - C30	C20	E01
A1												
1.0 TFSI	Petrol	60	01/16-10/18	**CHZE**						9.6499 C10		
All engines				x 3, BERU, ELDOR, COIL ON PLUG, incl. spark plug connector, Number of pins:4, incl. spark plug connector								
1.0 TFSI	Petrol	70	03/15-10/18	**CHZB, DKLD**						9.6499 C10		
All engines				x 3, BERU, ELDOR, COIL ON PLUG, incl. spark plug connector, Number of pins:4, incl. spark plug connector								
1.2 TFSI	Petrol	63	05/10-04/15	**CBZA**						9.8120 C30		4.7248
All engines												
1.4 TFSI	Petrol	103	04/12-04/15	**CPTA**						9.6499 C10		
All engines				x 4, BERU, ELDOR, COIL ON PLUG, incl. spark plug connector, Number of pins:4, incl. spark plug connector								
1.4 TFSI	Petrol	136	01/11-04/15	**CAVG, CTHG**						9.6374 C10		
All engines				x 4, COIL ON PLUG, incl. spark plug connector								
1.4 TFSI	Petrol	90	05/10-04/15	**CAXA, CNVA**						9.6374 C10		
All engines				x 4, COIL ON PLUG, incl. spark plug connector								
1.4 TFSI	Petrol	92	11/14-10/18	**CZCA, CZDD**						9.6499 C10		
All engines				x 4, BERU, ELDOR, COIL ON PLUG, incl. spark plug connector, Number of pins:4, incl. spark plug connector								
1.4 TSI	Petrol	110	11/14-10/18	**CZEA**						9.6499 C10		
All engines				x 4, BERU, ELDOR, COIL ON PLUG, incl. spark plug connector, Number of pins:4, incl. spark plug connector								
1.8 TFSI	Petrol	141	02/15-10/18	**DAJB**						9.6536 C10		
All engines				x 4, HITACHI, COIL ON PLUG, incl. spark plug connector								
2.0 TFSI quattro	Petrol	188	03/12-11/12	**CDLH**						9.6326 C10		
All engines				x 4, ELDOR, Housing Colour:Black, COIL ON PLUG, incl. spark plug connector								
25 TFSI	Petrol	70	11/18->	**DKLA, DLAC**						9.6499 C10		
All engines				x 3, BERU, ELDOR, COIL ON PLUG, incl. spark plug connector, Number of pins:4, incl. spark plug connector								
30 TFSI	Petrol	81	09/20->	**DLAA**						9.6499 C10		
All engines				x 3, ELDOR, COIL ON PLUG, incl. spark plug connector, Number of pins:4, incl. spark plug connector								
30 TFSI	Petrol	85	07/18->	**DKJA, DKRF**						9.6499 C10		
All engines				x 3, ELDOR, COIL ON PLUG, incl. spark plug connector, Number of pins:4, incl. spark plug connector								
40 TFSI	Petrol	147	09/18->	**CZPC, DKZC**						9.6536 C10		
All engines				x 4, HITACHI, COIL ON PLUG, incl. spark plug connector								

A10	CONDENSER	**A20**	CONTACT SET	**A40**	DISTRIBUTOR CAP	**A50**	ROTOR	**A70**	PICK-UP
C10	COIL	**C20**	IGNITION MODULE	**C30**	ELECTRONIC IGNITION KIT	**E01**	IGNITION CABLE SET		

The present application list is a brief version. For the detailed information about the possibility of installation on a specific vehicle, please refer to our web-catalogue http://catalogo.facet.eu/

Vehicle	alim.	kW	Date	Engine	FUNCTIONS ON THE VEHICLE: A10	A20	A40	A50	A70	C10 - C30	C20	E01
40 TFSI	Petrol	152	04/21->	DNND								

Engine	Information	A10	A20	A40	A50	A70	C10 - C30		C20	E01
All engines	x 4, HITACHI, COIL ON PLUG, incl. spark plug connector						9.6536	C10		

A2

1.4	Petrol	55	02/00-08/05	AUA, BBY

Engine	Information	A10	A20	A40	A50	A70	C10 - C30		C20	E01
Eng. BBY	x 4, COIL ON PLUG, incl. spark plug connector						9.6374	C10		
Eng. AUA							9.8120	C30		4.9575

1.6 FSI	Petrol	81	05/02-08/05	BAD

Engine	Information	A10	A20	A40	A50	A70	C10 - C30		C20	E01
All engines	x 4, COIL ON PLUG, incl. spark plug connector						9.6374	C10		

A3 I

1.6	Petrol	74	09/96-05/03	AEH, AKL, APF

Engine	Information	A10	A20	A40	A50	A70	C10 - C30		C20	E01
All engines							9.8120	C30		
Eng. AEH, AKL	ch. 8L-V-080 001 ->, ->ch. 8L-W-070 000									4.9479
All engines	ch. 8L-W-070 001 ->									4.9484
Eng. AEH	->ch. 8L-V-080 000									4.9585

1.6	Petrol	75	08/00-05/03	AVU, BFQ

Engine	Information	A10	A20	A40	A50	A70	C10 - C30		C20	E01
All engines							9.8120	C30		4.9585

1.8	Petrol	92	09/96-05/03	AGN, APG

Engine	Information	A10	A20	A40	A50	A70	C10 - C30		C20	E01
All engines							9.8120	C30		
All engines	ch. 8L-V-140 001 ->									4.9489

1.8 T	Petrol	110	12/96-05/03	AGU, ARZ, AUM

Engine	Information	A10	A20	A40	A50	A70	C10 - C30		C20	E01
Eng. AGU	x 4, COIL ON PLUG						9.6254S	C10		
Eng. AGU, AUM	x 4, COIL ON PLUG, incl. spark plug connector						9.6329	C10		
Eng. ARZ	x 4, COIL ON PLUG, incl. spark plug connector						9.6345	C10		
Eng. AGU									9.4076	

1.8 T	Petrol	132	12/98-05/03	AJQ, APP, ARY, AUQ

Engine	Information	A10	A20	A40	A50	A70	C10 - C30		C20	E01
Eng. ARY, AUQ	x 4, COIL ON PLUG, incl. spark plug connector						9.6329	C10		
Eng. AJQ, APP	x 4, COIL ON PLUG, incl. spark plug connector						9.6345	C10		

1.8 T quattro	Petrol	110	12/96-05/03	AGU, AQA, ARX

Engine	Information	A10	A20	A40	A50	A70	C10 - C30		C20	E01
Eng. AGU	x 4, COIL ON PLUG						9.6254S	C10		
Eng. ARX	x 4, COIL ON PLUG, incl. spark plug connector						9.6329	C10		
Eng. AQA	x 4, COIL ON PLUG, incl. spark plug connector						9.6345	C10		
Eng. AGU									9.4076	

1.8 T quattro	Petrol	132	10/98-05/03	AJQ, ARY

Engine	Information	A10	A20	A40	A50	A70	C10 - C30		C20	E01
Eng. ARY	x 4, COIL ON PLUG, incl. spark plug connector						9.6329	C10		
Eng. AJQ	x 4, COIL ON PLUG, incl. spark plug connector						9.6345	C10		

S3 quattro	Petrol	154	03/99-04/02	AMK, APY, AUL

Engine	Information	A10	A20	A40	A50	A70	C10 - C30		C20	E01
All engines	S3 Quattro, 01/01/01 ->, x 4, COIL ON PLUG, incl. spark plug connector						9.6329	C10		
All engines	S3 Quattro, ->year 01/12/00, x 4, COIL ON PLUG, incl. spark plug connector						9.6345	C10		

A10	CONDENSER	**A20**	CONTACT SET	**A40**	DISTRIBUTOR CAP	**A50**	ROTOR	**A70**	PICK-UP
C10	COIL	**C20**	IGNITION MODULE	**C30**	ELECTRONIC IGNITION KIT	**E01**	IGNITION CABLE SET		

The present application list is a brief version. For the detailed information about the possibility of installation on a specific vehicle, please refer to our web-catalogue http://catalogo.facet.eu/

Vehicle	alim.	kW	Date	Engine	FUNCTIONS ON THE VEHICLE A10	A20	A40	A50	A70	C10 - C30	C20	E01
S3 quattro	Petrol	165	10/01-05/03	**BAM**						9.6329 C10		
All engines	S3 Quattro, x 4, COIL ON PLUG, incl. spark plug connector											
A3 II												
1.2 TFSI	Petrol	77	03/10-05/13	**CBZB**						9.8120 C30		4.7248
All engines												
1.2 TSI	Petrol	77	04/10-03/13	**CBZB**						9.8120 C30		4.7248
All engines												
1.4 TFSI	Petrol	92	09/07-05/13	**CAXC, CMSA**						9.6374 C10		
All engines	x 4, COIL ON PLUG, incl. spark plug connector											
1.6	Petrol	75	05/03-03/13	**BGU, BSE, BSF, CCSA**						9.8120 C30		
All engines												
Eng. BGU, BSE, BSF												4.9585
1.6 E-Power	Petrol/ Ethanol	75	01/11-03/13	**CCSA, CMXA**						9.8120 C30		4.9585
All engines												
1.6 FSI	Petrol	85	08/03-09/07	**BAG, BLF, BLP**						9.6374 C10		
All engines	x 4, COIL ON PLUG, incl. spark plug connector											
1.8 TFSI	Petrol	118	11/06-05/13	**BYT, BZB, CDAA**						9.6326 C10		
All engines	x 4, ELDOR, Housing Colour:Black, COIL ON PLUG, incl. spark plug connector											
1.8 TFSI quattro	Petrol	118	07/08-03/13	**CDAA**						9.6326 C10		
All engines	x 4, ELDOR, Housing Colour:Black, COIL ON PLUG, incl. spark plug connector											
2.0 FSI	Petrol	110	05/03-06/08	**AXW, BLR, BLX, BLY, BMB, BVY, BVZ**						9.6326 C10		
All engines	x 4, ELDOR, Housing Colour:Black, COIL ON PLUG, incl. spark plug connector											
2.0 TFSI	Petrol	147	09/04-05/13	**AXX, BPY, BWA, CAWB, CBFA, CCZA**						9.6326 C10		
All engines	x 4, ELDOR, Housing Colour:Black, COIL ON PLUG, incl. spark plug connector											
2.0 TFSI quattro	Petrol	147	09/04-03/13	**AXX, BPY, BWA, CCTA, CCZA**						9.6326 C10		
Eng. AXX, BPY, BWA, CCZA	x 4, ELDOR, Housing Colour:Black, COIL ON PLUG, incl. spark plug connector											
Eng. CCTA	Qty: 4									9.6326 C10		
3.2 V6 quattro	Petrol	184	07/03-05/09	**BDB, BMJ, BUB**						9.6334 C10		
All engines	x 6, COIL ON PLUG											

A10	CONDENSER	**A20**	CONTACT SET	**A40**	DISTRIBUTOR CAP	**A50**	ROTOR	**A70**	PICK-UP
C10	COIL	**C20**	IGNITION MODULE	**C30**	ELECTRONIC IGNITION KIT	**E01**	IGNITION CABLE SET		

The present application list is a brief version. For the detailed information about the possibility of installation on a specific vehicle, please refer to our web-catalogue http://catalogo.facet.eu/

Vehicle	alim.	kW	Date	Engine	FUNCTIONS ON THE VEHICLE A10	A20	A40	A50	A70	C10 - C30	C20	E01
RS3 quattro	Petrol	250	01/11-12/12	**CEPA**								

Engine	Information	A10	A20	A40	A50	A70	C10 - C30		C20	E01
All engines	RS3 Sportback Quattro, x 5, ELDOR, Housing Colour:-Black, COIL ON PLUG, incl. spark plug connector						9.6326	C10		

S3 quattro	Petrol	188	02/07-03/13	**BZC, CDLC**								

Engine	Information	A10	A20	A40	A50	A70	C10 - C30		C20	E01
All engines	S3 Quattro, S3 Sportback Quattro, x 4, ELDOR, Housing Colour:Black, COIL ON PLUG, incl. spark plug connector						9.6326	C10		

S3 quattro	Petrol	195	11/06-03/13	**BHZ, CDLA**								

Engine	Information	A10	A20	A40	A50	A70	C10 - C30		C20	E01
All engines	S3 Quattro, S3 Sportback Quattro, x 4, ELDOR, Housing Colour:Black, COIL ON PLUG, incl. spark plug connector						9.6326	C10		
Eng. BHZ	Qty: 4						9.6326	C10		

A3 III

1.0 TFSI	Petrol	85	07/16-10/20	**CHZD, DKRF**								

Engine	Information	A10	A20	A40	A50	A70	C10 - C30		C20	E01
All engines	x 3, BERU, ELDOR, COIL ON PLUG, incl. spark plug connector, Number of pins:4, incl. spark plug connector						9.6499	C10		

1.2 TFSI	Petrol	77	02/13->	**CJZA**								

Engine	Information	A10	A20	A40	A50	A70	C10 - C30		C20	E01
All engines	x 4, BERU, ELDOR, COIL ON PLUG, incl. spark plug connector, Number of pins:4, incl. spark plug connector						9.6499	C10		

1.2 TFSI	Petrol	81	05/14->	**CYVB**								

Engine	Information	A10	A20	A40	A50	A70	C10 - C30		C20	E01
All engines	x 4, BERU, ELDOR, HITACHI, COIL ON PLUG, incl. spark plug connector, Number of pins:4, incl. spark plug connector						9.6499	C10		

1.4 TFSI	Petrol	103	03/13->	**CPTA**								

Engine	Information	A10	A20	A40	A50	A70	C10 - C30		C20	E01
All engines	x 4, BERU, ELDOR, COIL ON PLUG, incl. spark plug connector, Number of pins:4, incl. spark plug connector						9.6499	C10		

1.4 TFSI	Petrol	85	02/16-10/20	**CZCC**								

Engine	Information	A10	A20	A40	A50	A70	C10 - C30		C20	E01
All engines	x 4, BERU, ELDOR, COIL ON PLUG, incl. spark plug connector, Number of pins:4, incl. spark plug connector						9.6499	C10		

1.4 TFSI	Petrol	90	04/12-10/20	**CMBA, CXSA**								

Engine	Information	A10	A20	A40	A50	A70	C10 - C30		C20	E01
All engines	x 4, BERU, ELDOR, COIL ON PLUG, incl. spark plug connector, Number of pins:4, incl. spark plug connector						9.6499	C10		
Eng. CMBA	Qty: 4						9.6499	C10		

1.4 TFSI	Petrol	92	09/13->	**CXSB, CZCA**								

Engine	Information	A10	A20	A40	A50	A70	C10 - C30		C20	E01
All engines	x 4, BERU, ELDOR, COIL ON PLUG, incl. spark plug connector, Number of pins:4, incl. spark plug connector						9.6499	C10		

1.4 TFSI e-tron	Petrol/ Electric	110	05/14-10/20	**CUKB, CXUA, DGEA**								

Engine	Information	A10	A20	A40	A50	A70	C10 - C30		C20	E01
All engines	x 4, BERU, ELDOR, COIL ON PLUG, incl. spark plug connector, Number of pins:4, incl. spark plug connector						9.6499	C10		

1.4 TFSI g-tron	Petrol/ Compressed Natural Gas (CNG)	81	11/13-10/20	**CPWA**								

Engine	Information	A10	A20	A40	A50	A70	C10 - C30		C20	E01
All engines	x 4, BERU, ELDOR, COIL ON PLUG, incl. spark plug connector, Number of pins:4, incl. spark plug connector						9.6499	C10		

A10	CONDENSER	**A20**	CONTACT SET	**A40**	DISTRIBUTOR CAP	**A50**	ROTOR	**A70**	PICK-UP
C10	COIL	**C20**	IGNITION MODULE	**C30**	ELECTRONIC IGNITION KIT	**E01**	IGNITION CABLE SET		

The present application list is a brief version. For the detailed information about the possibility of installation on a specific vehicle, please refer to our web-catalogue http://catalogo.facet.eu/

Vehicle	alim.	kW	Date	Engine	FUNCTIONS ON THE VEHICLE							
					A10	A20	A40	A50	A70	C10 - C30	C20	E01
1.4 TSI	Petrol	110	05/14-10/20	**CZEA**						9.6499 C10		
All engines				x 4, BERU, ELDOR, HITACHI, COIL ON PLUG, incl. spark plug connector, Number of pins:4, incl. spark plug connector								
1.8 TFSI	Petrol	125	11/13-10/20	**CNSB**						9.6536 C10		
All engines				x 4, HITACHI, COIL ON PLUG, incl. spark plug connector								
1.8 TFSI	Petrol	132	04/12->	**CJSA, CJSB**						9.6536 C10		
All engines				x 4, HITACHI, COIL ON PLUG, incl. spark plug connector								
1.8 TFSI quattro	Petrol	132	08/12->	**CJSB**						9.6536 C10		
All engines				x 4, HITACHI, COIL ON PLUG, incl. spark plug connector								
2.0 TFSI	Petrol	140	05/16-10/20	**CZPB, DKZA**						9.6536 C10		
All engines				01/11/18 ->, x 4, HITACHI, x 4, COIL ON PLUG, HITACHI, COIL ON PLUG, incl. spark plug connector, incl. spark plug connector								
2.0 TFSI quattro	Petrol	140	05/16-10/20	**CZPB, DKZA**						9.6536 C10		
All engines				01/11/18 ->, x 4, HITACHI, x 4, COIL ON PLUG, HITACHI, COIL ON PLUG, incl. spark plug connector, incl. spark plug connector								
30 TFSI	Petrol	85	07/18-10/20	**CHZD, DKRF**						9.6499 C10		
All engines				x 3, BERU, ELDOR, COIL ON PLUG, incl. spark plug connector, Number of pins:4, incl. spark plug connector								
40 TFSI	Petrol	140	07/18-10/20	**CZPB, DKZA**						9.6536 C10		
All engines				01/11/18 ->, x 4, HITACHI, COIL ON PLUG, incl. spark plug connector								
40 TFSI quattro	Petrol	140	07/18-10/20	**CZPB, DKZA**						9.6536 C10		
All engines				x 4, HITACHI, x 4, COIL ON PLUG, HITACHI, COIL ON PLUG, incl. spark plug connector, incl. spark plug connector								
RS3 quattro	Petrol	270	03/15->	**CZGB**						9.6326 C10		
All engines				RS3 Sportback Quattro, x 5, ELDOR, Housing Colour:-Black, COIL ON PLUG, incl. spark plug connector								
S3 quattro	Petrol	213	07/16-10/20	**CJXD, DJHB**						9.6536 C10		
All engines				S3 Cabrio Quattro, S3 Quattro, S3 Sportback Quattro, x 4, HITACHI, COIL ON PLUG, incl. spark plug connector								
S3 quattro	Petrol	221	11/12-10/20	**DNUE**						9.6536 C10		
All engines				S3 Cabrio Quattro, S3 Quattro, S3 Sportback Quattro, 01/12/19 ->, x 4, HITACHI, COIL ON PLUG, incl. spark plug connector								
S3 quattro	Petrol	228	06/16-10/20	**CJXG, DJHA**						9.6536 C10		
All engines				S3 Cabrio Quattro, S3 Quattro, S3 Sportback Quattro, x 4, HITACHI, COIL ON PLUG, incl. spark plug connector								

A10	CONDENSER	**A20**	CONTACT SET	**A40**	DISTRIBUTOR CAP	**A50**	ROTOR	**A70**	PICK-UP
C10	COIL	**C20**	IGNITION MODULE	**C30**	ELECTRONIC IGNITION KIT	**E01**	IGNITION CABLE SET		

The present application list is a brief version. For the detailed information about the possibility of installation on a specific vehicle, please refer to our web-catalogue http://catalogo.facet.eu/

Vehicle	alim.	kW	Date	Engine	FUNCTIONS ON THE VEHICLE: A10	A20	A40	A50	A70	C10 - C30	C20	E01

A3 IV

				ENGINE
30 TFSI	Petrol	81	06/20->	DLAA

Engine	Information	A10	A20	A40	A50	A70	C10 - C30		C20	E01
All engines	x 3, ELDOR, COIL ON PLUG, Number of pins:4, incl. spark plug connector						9.6499	C10		

				ENGINE
30 TFSI Mild Hybrid	Petrol/ Electric	81	06/20->	DLAA

Engine	Information	A10	A20	A40	A50	A70	C10 - C30		C20	E01
All engines	x 3, ELDOR, COIL ON PLUG, Number of pins:4, incl. spark plug connector						9.6499	C10		

				ENGINE
40 TFSIe	Petrol/ Electric	110	06/20->	DGEA

Engine	Information	A10	A20	A40	A50	A70	C10 - C30		C20	E01
All engines	x 4, ELDOR, COIL ON PLUG, Number of pins:4, incl. spark plug connector						9.6499	C10		

				ENGINE
45 TFSIe	Petrol/ Electric	110	07/21->	DGEA

Engine	Information	A10	A20	A40	A50	A70	C10 - C30		C20	E01
All engines	x 4, ELDOR, COIL ON PLUG, Number of pins:4, incl. spark plug connector						9.6499	C10		

				ENGINE
S3 quattro	Petrol	228	06/20->	DNFB

Engine	Information	A10	A20	A40	A50	A70	C10 - C30		C20	E01
All engines	S3 Quattro, S3 Sportback Quattro, x 4, HITACHI, COIL ON PLUG, incl. spark plug connector						9.6536	C10		

A4 I

				ENGINE
1.6	Petrol	74	11/94-09/01	0D6-280 I-A, ADP, AHL, ANA, ARM

Engine	Information	A10	A20	A40	A50	A70	C10 - C30		C20	E01
Eng. ADP	version Bosch			2.7530/36PHT	3.7573/21RS					
Eng. ADP	version Ducellier			2.7668PHT	3.7699RS					
Eng. ADP						8.2723				4.9353
Eng. AHL, ANA, ARM							9.8120	C30		
Eng. 0D6-280 I-A, AHL, ANA										4.9585

				ENGINE
1.6	Petrol	75	07/00-09/01	ALZ

Engine	Information	A10	A20	A40	A50	A70	C10 - C30		C20	E01
All engines							9.8120	C30		4.9585

				ENGINE
1.8	Petrol	85	04/95-09/01	AFY

Engine	Information	A10	A20	A40	A50	A70	C10 - C30		C20	E01
All engines										4.9491

				ENGINE
1.8	Petrol	92	11/94-09/01	ADR, APT, ARG, AVV

Engine	Information	A10	A20	A40	A50	A70	C10 - C30		C20	E01
All engines										4.9491

				ENGINE
1.8 quattro	Petrol	85	07/95-09/01	AFY

Engine	Information	A10	A20	A40	A50	A70	C10 - C30		C20	E01
All engines										4.9491

				ENGINE
1.8 quattro	Petrol	92	01/95-09/01	ADR, APT, ARG

Engine	Information	A10	A20	A40	A50	A70	C10 - C30		C20	E01
All engines										4.9491

				ENGINE
1.8 T	Petrol	110	01/95-09/01	1HN9, AEB, ANB, APU, ARK, AWT

Engine	Information	A10	A20	A40	A50	A70	C10 - C30		C20	E01
Eng. AEB, ANB, APU, ARK	x 4, COIL ON PLUG						9.6254S	C10		
Eng. AWT	x 4, COIL ON PLUG, incl. spark plug connector						9.6329	C10		
Eng. 1HN9, ANB, APU, ARK	ch. 8D-V-244 484 ->								9.4072	

A10	CONDENSER	A20	CONTACT SET	A40	DISTRIBUTOR CAP	A50	ROTOR	A70	PICK-UP
C10	COIL	C20	IGNITION MODULE	C30	ELECTRONIC IGNITION KIT	E01	IGNITION CABLE SET		

The present application list is a brief version. For the detailed information about the possibility of installation on a specific vehicle, please refer to our web-catalogue http://catalogo.facet.eu/

Vehicle	alim.	kW	Date	Engine	FUNCTIONS ON THE VEHICLE A10	A20	A40	A50	A70	C10 - C30	C20	E01
1.8 T	Petrol	110	01/95-09/01	ENGINE 1HN9, AEB, ANB, APU, ARK, AWT								
Eng. 1HN9	->ch. 8D-V-244 483										9.4076	
1.8 T	Petrol	132	12/97-09/01	ENGINE AJL								
All engines	x 4, COIL ON PLUG									9.6254S C10		
All engines											9.4072	
1.8 T quattro	Petrol	110	01/95-09/01	ENGINE 1HN9, AEB, ANB, APU, ARK, AWT								
Eng. AEB, ANB, APU, ARK, AWT	x 4, COIL ON PLUG									9.6254S C10		
Eng. AWT	Qty: 4									9.6329 C10		
Eng. 1HN9, ANB, APU, ARK	ch. 8D-V-244 484 ->										9.4072	
Eng. 1HN9	->ch. 8D-V-244 483										9.4076	
1.8 T quattro	Petrol	132	12/97-09/01	ENGINE AJL								
All engines	x 4, COIL ON PLUG									9.6254S C10		
All engines											9.4072	
2.4	Petrol	110	07/95-07/97	ENGINE AFM								
All engines											9.4051	
2.6	Petrol	110	01/95-09/01	ENGINE ABC								
All engines											9.4051	
2.6 quattro	Petrol	110	01/95-09/01	ENGINE ABC								
All engines											9.4051	
2.8	Petrol	128	09/95-07/97	ENGINE AAH								
All engines											9.4051	
2.8 quattro	Petrol	128	01/95-07/97	ENGINE AAH								
All engines											9.4051	
RS4 quattro	Petrol	280	05/00-09/01	ENGINE ASJ, AZR								
All engines	RS4 Quattro, x 6, COIL ON PLUG									9.6254S C10		
Eng. AZR												4.8768
S4 quattro	Petrol	195	09/97-09/01	ENGINE AGB, AZB								
All engines	S4 Quattro, x 6, COIL ON PLUG									9.6254S C10		
A4 II												
1.6	Petrol	75	11/00-12/04	ENGINE ALZ								
All engines										9.8120 C30		4.9585
1.8 T	Petrol	110	11/00-07/02	ENGINE AVJ								
All engines	x 4, COIL ON PLUG, incl. spark plug connector									9.6329 C10		
All engines											9.4076	

A10	CONDENSER	**A20**	CONTACT SET	**A40**	DISTRIBUTOR CAP	**A50**	ROTOR	**A70**	PICK-UP
C10	COIL	**C20**	IGNITION MODULE	**C30**	ELECTRONIC IGNITION KIT	**E01**	IGNITION CABLE SET		

The present application list is a brief version. For the detailed information about the possibility of installation on a specific vehicle, please refer to our web-catalogue http://catalogo.facet.eu/

Vehicle	alim.	kW	Date	Engine	FUNCTIONS ON THE VEHICLE A10	A20	A40	A50	A70	C10 - C30	C20	E01
1.8 T	Petrol	120	07/02-12/04	BFB						9.6329 C10		
Engine: All engines — Information: x 4, COIL ON PLUG, incl. spark plug connector												
1.8 T	Petrol	125	07/01-12/04	AMB						9.6329 C10		
Engine: All engines — Information: x 4, COIL ON PLUG, incl. spark plug connector												
1.8 T	Petrol	140	11/02-12/04	BEX						9.6329 C10		
Engine: All engines — Information: x 4, COIL ON PLUG, incl. spark plug connector												
1.8 T quattro	Petrol	110	11/00-07/02	AVJ						9.6329 C10		
Engine: All engines — Information: x 4, COIL ON PLUG, incl. spark plug connector												
Engine: All engines — Information:											9.4076	
1.8 T quattro	Petrol	120	07/02-12/04	BFB						9.6329 C10		
Engine: All engines — Information: x 4, COIL ON PLUG, incl. spark plug connector												
1.8 T quattro	Petrol	125	07/01-12/04	AMB						9.6329 C10		
Engine: All engines — Information: x 4, COIL ON PLUG, incl. spark plug connector												
1.8 T quattro	Petrol	140	11/02-12/04	BEX						9.6329 C10		
Engine: All engines — Information: x 4, COIL ON PLUG, incl. spark plug connector												
2.0	Petrol	96	11/00-12/04	ALT						9.6336 C10		
Engine: All engines — Information: x 4, Colour:Red, COIL ON PLUG, incl. spark plug connector												
2.0 FSI	Petrol	110	07/02-12/04	AWA						9.6327 C10		
Engine: All engines — Information: x 4, Colour:Red, COIL ON PLUG, incl. spark plug connector												
3.0	Petrol	160	04/01-12/04	BBJ						9.6336 C10		
Engine: All engines — Information: x 6, Colour:Red, COIL ON PLUG, incl. spark plug connector												
3.0	Petrol	162	11/00-12/04	ASN, AVK						9.6336 C10		
Engine: Eng. ASN — Information: x 6, Colour:Red, COIL ON PLUG, incl. spark plug connector												
Engine: Eng. AVK — Information: Qty: 6												
3.0 quattro	Petrol	160	04/01-12/04	BBJ						9.6336 C10		
Engine: All engines — Information: x 6, Colour:Red, COIL ON PLUG, incl. spark plug connector												
3.0 quattro	Petrol	162	11/00-12/04	ASN, AVK						9.6336 C10		
Engine: All engines — Information: x 6, Colour:Red, COIL ON PLUG, incl. spark plug connector												
Engine: Eng. AVK — Information: Qty: 6												
S4 quattro	Petrol	253	03/03-12/04	BBK						9.6333 C10		
Engine: All engines — Information: S4 Quattro, x 8, Colour:Red, COIL ON PLUG, incl. spark plug connector												

A10	CONDENSER	A20	CONTACT SET	A40	DISTRIBUTOR CAP	A50	ROTOR	A70	PICK-UP
C10	COIL	C20	IGNITION MODULE	C30	ELECTRONIC IGNITION KIT	E01	IGNITION CABLE SET		

The present application list is a brief version. For the detailed information about the possibility of installation on a specific vehicle, please refer to our web-catalogue http://catalogo.facet.eu/

Vehicle	alim.	kW	Date	Engine	FUNCTIONS ON THE VEHICLE							
					A10	A20	A40	A50	A70	C10 - C30	C20	E01
A4 III												
1.6	Petrol	75	11/04-06/08	ENGINE: ALZ								
All engines										9.8120 C30		4.9585
1.8 T	Petrol	120	07/02-03/09	ENGINE: BFB								
All engines				x 4, COIL ON PLUG, incl. spark plug connector						9.6329 C10		
1.8 T quattro	Petrol	120	05/03-06/08	ENGINE: BFB								
All engines				x 4, COIL ON PLUG, incl. spark plug connector						9.6329 C10		
2.0	Petrol	96	09/04-06/08	ENGINE: ALT								
All engines				x 4, COIL ON PLUG, incl. spark plug connector						9.6329 C10		
All engines				x 4, Colour:Red, COIL ON PLUG, incl. spark plug connector						9.6336 C10		
2.0 TFSI	Petrol	125	10/06-06/08	ENGINE: BPJ, BYK								
Eng. BPJ				x 4, ELDOR, Housing Colour:Black, COIL ON PLUG, incl. spark plug connector						9.6326 C10		
Eng. BYK				Qty: 4						9.6326 C10		
2.0 TFSI	Petrol	147	11/04-06/08	ENGINE: BGB, BPG, BWE, BWT								
All engines				x 4, ELDOR, Housing Colour:Black, COIL ON PLUG, incl. spark plug connector						9.6326 C10		
2.0 TFSI	Petrol	162	06/05-06/08	ENGINE: BUL								
All engines				x 4, ELDOR, Housing Colour:Black, COIL ON PLUG, incl. spark plug connector						9.6326 C10		
2.0 TFSI 16V	Petrol	147	01/06-03/09	ENGINE: BWE, BWT								
All engines				x 4, ELDOR, Housing Colour:Black, COIL ON PLUG, incl. spark plug connector						9.6326 C10		
2.0 TFSI quattro	Petrol	147	11/04-03/09	ENGINE: BGB, BWE, BWT								
All engines				x 4, ELDOR, Housing Colour:Black, COIL ON PLUG, incl. spark plug connector						9.6326 C10		
Eng. BWT				Qty: 4						9.6326 C10		
2.0 TFSI quattro	Petrol	162	06/05-06/08	ENGINE: BUL								
All engines				x 4, ELDOR, Housing Colour:Black, COIL ON PLUG, incl. spark plug connector						9.6326 C10		
3.0	Petrol	160	04/02-05/06	ENGINE: BBJ								
All engines				x 6, Colour:Red, COIL ON PLUG, incl. spark plug connector						9.6336 C10		
3.0	Petrol	162	04/02-12/05	ENGINE: ASN								
All engines				x 6, Colour:Red, COIL ON PLUG, incl. spark plug connector						9.6336 C10		
3.0 quattro	Petrol	160	11/04-07/06	ENGINE: BBJ								
All engines				x 6, Colour:Red, COIL ON PLUG, incl. spark plug connector						9.6336 C10		

A10	CONDENSER	**A20**	CONTACT SET	**A40**	DISTRIBUTOR CAP	**A50**	ROTOR	**A70**	PICK-UP
C10	COIL	**C20**	IGNITION MODULE	**C30**	ELECTRONIC IGNITION KIT	**E01**	IGNITION CABLE SET		

The present application list is a brief version. For the detailed information about the possibility of installation on a specific vehicle, please refer to our web-catalogue http://catalogo.facet.eu/

Vehicle	alim.	kW	Date	Engine	FUNCTIONS ON THE VEHICLE: A10	A20	A40	A50	A70	C10 - C30	C20	E01
3.0 quattro	Petrol	162	05/03-12/05	ASN								
All engines	x 6, Colour:Red, COIL ON PLUG, incl. spark plug connector									9.6336 C10		
3.2 FSI	Petrol	188	01/05-03/09	AUK								
All engines	x 6, Colour:Red, COIL ON PLUG, incl. spark plug connector									9.6327 C10		
3.2 FSI quattro	Petrol	188	01/05-03/09	AUK, BKH								
Eng. AUK	x 6, Colour:Red, COIL ON PLUG, incl. spark plug connector									9.6327 C10		
Eng. BKH	Qty: 6									9.6327 C10		
RS4 quattro	Petrol	309	09/05-12/08	BNS								
All engines	RS4 Cabrio Quattro, RS4 Quattro, x 8, ELDOR, Housing Colour:Black, COIL ON PLUG, incl. spark plug connector									9.6326 C10		
S4 quattro	Petrol	253	03/04-03/09	BBK, BHF								
All engines	S4 Cabrio Quattro, S4 Quattro, x 8, Colour:Red, x 8, COIL ON PLUG, Colour:Red, COIL ON PLUG, incl. spark plug connector, incl. spark plug connector									9.6333 C10		
A4 IV												
1.8 TFSI	Petrol	118	11/07-03/12	CABB, CDHB								
All engines	x 4, ELDOR, Housing Colour:Black, COIL ON PLUG, incl. spark plug connector									9.6326 C10		
1.8 TFSI	Petrol	125	11/11-12/15	CJEB								
All engines	x 4, ELDOR, Colour:Black, COIL ON PLUG									9.6536 C10		
1.8 TFSI	Petrol	88	01/08-12/15	CABA, CDHA								
All engines	x 4, ELDOR, Housing Colour:Black, COIL ON PLUG, incl. spark plug connector									9.6326 C10		
1.8 TFSI quattro	Petrol	118	09/08-03/12	CDHB								
All engines	x 4, ELDOR, Housing Colour:Black, COIL ON PLUG, incl. spark plug connector									9.6326 C10		
1.8 TFSI quattro	Petrol	125	11/11-12/15	CJEB								
All engines	x 4, ELDOR, Colour:Black, COIL ON PLUG									9.6536 C10		
2.0 TFSI	Petrol	132	06/08-12/15	CAEA, CDNB, CFKA								
Eng. CAEA	Qty: 4									9.6326 C10		
Eng. CDNB, CFKA	x 4, ELDOR, Housing Colour:Black, COIL ON PLUG, incl. spark plug connector									9.6326 C10		
2.0 TFSI	Petrol	155	06/08-05/13	CAEB, CDNC								
All engines	x 4, ELDOR, Housing Colour:Black, COIL ON PLUG, incl. spark plug connector									9.6326 C10		
Eng. CAEB	Qty: 4									9.6326 C10		
2.0 TFSI	Petrol	162	05/13-12/15	CAED								
All engines	Qty: 4									9.6326 C10		
All engines	x 4, ELDOR, Housing Colour:Black, COIL ON PLUG, incl. spark plug connector									9.6326 C10		

A10	CONDENSER	**A20**	CONTACT SET	**A40**	DISTRIBUTOR CAP	**A50**	ROTOR	**A70**	PICK-UP
C10	COIL	**C20**	IGNITION MODULE	**C30**	ELECTRONIC IGNITION KIT	**E01**	IGNITION CABLE SET		

The present application list is a brief version. For the detailed information about the possibility of installation on a specific vehicle, please refer to our web-catalogue http://catalogo.facet.eu/

Vehicle	alim.	kW	Date	Engine	FUNCTIONS ON THE VEHICLE A10	A20	A40	A50	A70	C10 - C30	C20	E01
2.0 TFSI	Petrol	165	05/13-12/15	**CNCD**								
Engine: All engines	Information: ->year 01/05/15, x 4, HITACHI, COIL ON PLUG, incl. spark plug connector									9.6536 C10		
2.0 TFSI flexible fuel	Petrol/ Ethanol	132	11/09-12/15	**CFKA**								
Engine: All engines	Information: x 4, ELDOR, Housing Colour:Black, COIL ON PLUG, incl. spark plug connector									9.6326 C10		
2.0 TFSI flexible fuel quattro	Petrol/ Ethanol	132	11/09-12/15	**CFKA**								
Engine: All engines	Information: x 4, ELDOR, Housing Colour:Black, COIL ON PLUG, incl. spark plug connector									9.6326 C10		
2.0 TFSI quattro	Petrol	132	11/09-03/12	**CFKA**								
Engine: All engines	Information: x 4, ELDOR, Housing Colour:Black, COIL ON PLUG, incl. spark plug connector									9.6326 C10		
2.0 TFSI quattro	Petrol	155	06/08-12/15	**CAEB, CDNC, CPMA**								
Engine: All engines	Information: x 4, ELDOR, Housing Colour:Black, COIL ON PLUG, incl. spark plug connector									9.6326 C10		
Engine: Eng. CAEB	Information: Qty: 4									9.6326 C10		
2.0 TFSI quattro	Petrol	162	05/13-12/15	**CAED, CPMB**								
Engine: All engines	Information: x 4, ELDOR, Housing Colour:Black, COIL ON PLUG, incl. spark plug connector									9.6326 C10		
2.0 TFSI quattro	Petrol	165	05/13-12/15	**CNCD**								
Engine: All engines	Information: ->year 01/05/15, x 4, HITACHI, COIL ON PLUG, incl. spark plug connector									9.6536 C10		
3.0 TFSI quattro	Petrol	200	02/12-12/15	**CMUA, CRED**								
Engine: All engines	Information: x 6, Colour:Red, COIL ON PLUG, incl. spark plug connector									9.6327 C10		
3.2 FSI	Petrol	195	09/08-03/12	**CALA**								
Engine: All engines	Information: x 6, Colour:Red, COIL ON PLUG, incl. spark plug connector									9.6327 C10		
3.2 FSI quattro	Petrol	195	11/07-03/12	**CALA**								
Engine: All engines	Information: x 6, Colour:Red, COIL ON PLUG, incl. spark plug connector									9.6327 C10		
RS4 quattro	Petrol	331	05/12-08/15	**CFSA**								
Engine: All engines	Information: RS4 Quattro, x 8, ELDOR, Housing Colour:Black, COIL ON PLUG, incl. spark plug connector									9.6326 C10		
S4 quattro	Petrol	245	11/08-12/15	**CAKA, CCBA, CGWC, CGXC, CREC, CTUB**								
Engine: All engines	Information: S4 Quattro, x 6, Colour:Red, COIL ON PLUG, incl. spark plug connector									9.6327 C10		
A4 IV ALLROAD												
2.0 TFSI quattro	Petrol	155	04/09-05/16	**CDNC, CPMA**								
Engine: All engines	Information: x 4, ELDOR, Housing Colour:Black, COIL ON PLUG, incl. spark plug connector									9.6326 C10		

A10	CONDENSER	**A20**	CONTACT SET	**A40**	DISTRIBUTOR CAP	**A50**	ROTOR	**A70**	PICK-UP
C10	COIL	**C20**	IGNITION MODULE	**C30**	ELECTRONIC IGNITION KIT	**E01**	IGNITION CABLE SET		

The present application list is a brief version. For the detailed information about the possibility of installation on a specific vehicle, please refer to our web-catalogue http://catalogo.facet.eu/

Vehicle	alim.	kW	Date	Engine	FUNCTIONS ON THE VEHICLE							
					A10	A20	A40	A50	A70	C10 - C30	C20	E01
2.0 TFSI quattro	Petrol	162	05/13-05/16	ENGINE **CPMB**								

Engine	Information	A10	A20	A40	A50	A70	C10 - C30		C20	E01
All engines	x 4, ELDOR, Housing Colour:Black, COIL ON PLUG, incl. spark plug connector						9.6326	C10		

2.0 TFSI quattro	Petrol	165	05/13-05/16	ENGINE **CNCD**								

Engine	Information	A10	A20	A40	A50	A70	C10 - C30		C20	E01
All engines	->year 01/05/15, x 4, HITACHI, COIL ON PLUG, incl. spark plug connector						9.6536	C10		

A4 V

1.4 TFSI	Petrol	110	08/15-11/19	ENGINE **CVNA**								

Engine	Information	A10	A20	A40	A50	A70	C10 - C30		C20	E01
All engines	x 4, BERU, ELDOR, COIL ON PLUG, incl. spark plug connector, Number of pins:4, incl. spark plug connector						9.6499	C10		

2.0 TFSI	Petrol	183	11/15-11/19	ENGINE **CYRC**								

Engine	Information	A10	A20	A40	A50	A70	C10 - C30		C20	E01
All engines	x 4, HITACHI, COIL ON PLUG, incl. spark plug connector						9.6536	C10		

2.0 TFSI	Petrol	185	05/15-11/19	ENGINE **CYMC, CYRB**								

Engine	Information	A10	A20	A40	A50	A70	C10 - C30		C20	E01
All engines	x 4, HITACHI, COIL ON PLUG, incl. spark plug connector						9.6536	C10		

2.0 TFSI Mild Hybrid	Petrol/ Electric	185	05/17-11/19	ENGINE **DDWA**								

Engine	Information	A10	A20	A40	A50	A70	C10 - C30		C20	E01
All engines	x 4, HITACHI, COIL ON PLUG, incl. spark plug connector						9.6536	C10		

2.0 TFSI Mild Hybrid quattro	Petrol/ Electric	185	05/17->	ENGINE **DDWA**								

Engine	Information	A10	A20	A40	A50	A70	C10 - C30		C20	E01
All engines	x 4, HITACHI, COIL ON PLUG, incl. spark plug connector						9.6536	C10		

2.0 TFSI quattro	Petrol	183	11/15-11/19	ENGINE **CYRC**								

Engine	Information	A10	A20	A40	A50	A70	C10 - C30		C20	E01
All engines	x 4, HITACHI, COIL ON PLUG, incl. spark plug connector						9.6536	C10		

2.0 TFSI quattro	Petrol	185	05/15->	ENGINE **CYMC, CYRB**								

Engine	Information	A10	A20	A40	A50	A70	C10 - C30		C20	E01
All engines	x 4, HITACHI, COIL ON PLUG, incl. spark plug connector						9.6536	C10		

35 TFSI Mild Hybrid	Petrol/ Electric	110	12/18->	ENGINE **DLVB, DMSB**								

Engine	Information	A10	A20	A40	A50	A70	C10 - C30		C20	E01
All engines	x 4, HITACHI, COIL ON PLUG, incl. spark plug connector						9.6536	C10		

40 TFSI Mild Hybrid	Petrol/ Electric	150	06/20->	ENGINE **DMSA**								

Engine	Information	A10	A20	A40	A50	A70	C10 - C30		C20	E01
All engines	x 4, HITACHI, COIL ON PLUG, incl. spark plug connector						9.6536	C10		

40 TFSI Mild Hybrid quattro	Petrol/ Electric	150	06/20->	ENGINE **DMSA**								

Engine	Information	A10	A20	A40	A50	A70	C10 - C30		C20	E01
All engines	x 4, HITACHI, COIL ON PLUG, incl. spark plug connector						9.6536	C10		

45 TFSI Mild Hybrid	Petrol/ Electric	180	07/18-11/19	ENGINE **DKNA**								

Engine	Information	A10	A20	A40	A50	A70	C10 - C30		C20	E01
All engines	x 4, HITACHI, COIL ON PLUG, incl. spark plug connector						9.6536	C10		

A10	CONDENSER	**A20**	CONTACT SET	**A40**	DISTRIBUTOR CAP	**A50**	ROTOR	**A70**	PICK-UP
C10	COIL	**C20**	IGNITION MODULE	**C30**	ELECTRONIC IGNITION KIT	**E01**	IGNITION CABLE SET		

The present application list is a brief version. For the detailed information about the possibility of installation on a specific vehicle, please refer to our web-catalogue http://catalogo.facet.eu/

Vehicle	alim.	kW	Date	Engine	FUNCTIONS ON THE VEHICLE A10	A20	A40	A50	A70	C10 - C30	C20	E01
45 TFSI Mild Hybrid quattro	Petrol/ Electric	180	07/18-11/19	**DKNA**								
All engines	x 4, HITACHI, COIL ON PLUG, incl. spark plug connector									9.6536 C10		
45 TFSI Mild Hybrid quattro	Petrol/ Electric	195	08/20->	**DMTA**								
All engines	x 4, HITACHI, COIL ON PLUG, incl. spark plug connector									9.6536 C10		

A4 V ALLROAD

2.0 TFSI Mild Hybrid quattro	Petrol/ Electric	185	11/18-10/19	**DDWA**								
All engines	x 4, HITACHI, COIL ON PLUG, incl. spark plug connector									9.6536 C10		
2.0 TFSI quattro	Petrol	183	05/16-10/19	**CYRC**								
All engines	x 4, HITACHI, COIL ON PLUG, incl. spark plug connector									9.6536 C10		
2.0 TFSI quattro	Petrol	185	01/16->	**CYMC, CYRB**								
All engines	x 4, HITACHI, COIL ON PLUG, incl. spark plug connector									9.6536 C10		
45 TFSI Mild Hybrid quattro	Petrol/ Electric	180	07/18->	**DKNA**								
All engines	x 4, HITACHI, COIL ON PLUG, incl. spark plug connector									9.6536 C10		
45 TFSI Mild Hybrid quattro	Petrol/ Electric	195	08/20->	**DMTA**								
All engines	x 4, HITACHI, COIL ON PLUG, incl. spark plug connector									9.6536 C10		

A5 I

1.8 TFSI	Petrol	106	09/14-01/17	**CJED**								
All engines	->year 01/03/15, x 4, Colour:Black, COIL ON PLUG, incl. spark plug connector									9.6536 C10		
1.8 TFSI	Petrol	118	05/09-03/12	**CDHB**								
All engines	x 4, ELDOR, Housing Colour:Black, COIL ON PLUG, incl. spark plug connector									9.6326 C10		
1.8 TFSI	Petrol	125	10/07-01/17	**CABD, CJEB**								
Eng. CABD	Qty: 4									9.6326 C10		
Eng. CABD	x 4, ELDOR, Housing Colour:Black, COIL ON PLUG, incl. spark plug connector									9.6326 C10		
Eng. CJEB	->year 01/04/15, x 4, ELDOR, x 4, Colour:Black, ELDOR, x 4, COIL ON PLUG, Colour:Black, COIL ON PLUG, incl. spark plug connector, incl. spark plug connector									9.6536 C10		
1.8 TFSI	Petrol	130	05/15-01/17	**CJEE**								
All engines	->year 01/05/15, x 4, Colour:Black, COIL ON PLUG, incl. spark plug connector									9.6536 C10		
2.0 TFSI	Petrol	132	11/08-06/14	**CAEA, CDNB**								
All engines	x 4, ELDOR, Housing Colour:Black, COIL ON PLUG, incl. spark plug connector									9.6326 C10		

A10	CONDENSER	**A20**	CONTACT SET	**A40**	DISTRIBUTOR CAP	**A50**	ROTOR	**A70**	PICK-UP
C10	COIL	**C20**	IGNITION MODULE	**C30**	ELECTRONIC IGNITION KIT	**E01**	IGNITION CABLE SET		

The present application list is a brief version. For the detailed information about the possibility of installation on a specific vehicle, please refer to our web-catalogue http://catalogo.facet.eu/

Vehicle	alim.	kW	Date	Engine	FUNCTIONS ON THE VEHICLE: A10	A20	A40	A50	A70	C10 - C30	C20	E01
2.0 TFSI	Petrol	155	06/08-06/14	CAEB, CDNC								
All engines	x 4, ELDOR, Housing Colour:Black, COIL ON PLUG, incl. spark plug connector									9.6326 C10		
2.0 TFSI	Petrol	162	05/13-12/14	CAED								
All engines	x 4, ELDOR, Housing Colour:Black, COIL ON PLUG, incl. spark plug connector									9.6326 C10		
2.0 TFSI	Petrol	165	05/13-05/16	CNCD								
All engines	->year 01/05/15, x 4, HITACHI, COIL ON PLUG, incl. spark plug connector									9.6536 C10		
2.0 TFSI quattro	Petrol	155	06/08-01/17	CAEB, CDNC, CPMA								
All engines	x 4, ELDOR, Housing Colour:Black, COIL ON PLUG, incl. spark plug connector									9.6326 C10		
Eng. CAEB	Qty: 4									9.6326 C10		
2.0 TFSI quattro	Petrol	162	03/12-01/17	CAED, CPMB								
All engines	x 4, ELDOR, Housing Colour:Black, COIL ON PLUG, incl. spark plug connector									9.6326 C10		
Eng. CPMB	Qty: 4									9.6326 C10		
2.0 TFSI quattro	Petrol	165	05/13-05/16	CNCD								
All engines	->year 01/05/15, x 4, HITACHI, COIL ON PLUG, incl. spark plug connector									9.6536 C10		
3.0 TFSI quattro	Petrol	200	08/11->	CHMB, CMUA, CRED								
All engines	x 6, Colour:Red, COIL ON PLUG, incl. spark plug connector									9.6327 C10		
Eng. CHMB	Qty: 6									9.6327 C10		
3.2 FSI	Petrol	195	06/07-03/12	CALA								
All engines	x 6, Colour:Red, COIL ON PLUG, incl. spark plug connector									9.6327 C10		
3.2 FSI quattro	Petrol	195	06/07-03/12	CALA								
All engines	x 6, Colour:Red, COIL ON PLUG, incl. spark plug connector									9.6327 C10		
RS5 quattro	Petrol	331	03/10-01/17	CFSA								
All engines	RS5 Cabrio Quattro, RS5 Quattro, x 8, ELDOR, Housing Colour:Black, COIL ON PLUG, incl. spark plug connector									9.6326 C10		
S5 quattro	Petrol	245	06/09-01/17	CAKA, CCBA, CGWC, CGXC, CREC, CTDA, CTUB								
All engines	S5 Cabrio Quattro, S5 Quattro, S5 Sportback Quattro, x 6, Colour:Red, COIL ON PLUG, incl. spark plug connector									9.6327 C10		
Eng. CGXC, CTUB	Qty: 6									9.6327 C10		
S5 quattro	Petrol	260	06/07-03/12	CAUA								
All engines	S5 Quattro, x 8, Colour:Red, COIL ON PLUG, incl. spark plug connector									9.6327 C10		
A5 II												
1.4 TFSI	Petrol	110	11/16-02/20	CVNA								
All engines	x 4, HITACHI, COIL ON PLUG, incl. spark plug connector									9.6499 C10		

A10	CONDENSER	A20	CONTACT SET	A40	DISTRIBUTOR CAP	A50	ROTOR	A70	PICK-UP
C10	COIL	C20	IGNITION MODULE	C30	ELECTRONIC IGNITION KIT	E01	IGNITION CABLE SET		

The present application list is a brief version. For the detailed information about the possibility of installation on a specific vehicle, please refer to our web-catalogue http://catalogo.facet.eu/

Vehicle	alim.	kW	Date	Engine	FUNCTIONS ON THE VEHICLE A10	A20	A40	A50	A70	C10 - C30	C20	E01
2.0 TFSI	Petrol	185	11/16-02/20	CYRB								
All engines	x 4, HITACHI, COIL ON PLUG, incl. spark plug connector									9.6536 C10		
2.0 TFSI Mild Hybrid	Petrol/ Electric	185	05/17-02/20	DDWA								
All engines	x 4, HITACHI, COIL ON PLUG, incl. spark plug connector									9.6536 C10		
2.0 TFSI Mild Hybrid quattro	Petrol/ Electric	185	05/17->	DDWA, DLHB								
All engines	x 4, HITACHI, COIL ON PLUG, incl. spark plug connector									9.6536 C10		
2.0 TFSI quattro	Petrol	183	06/16-02/20	CYRC								
All engines	x 4, HITACHI, COIL ON PLUG, incl. spark plug connector									9.6536 C10		
2.0 TFSI quattro	Petrol	185	06/16->	CYMC, CYRB								
All engines	x 4, HITACHI, COIL ON PLUG, incl. spark plug connector									9.6536 C10		
35 TFSI Mild Hybrid	Petrol/ Electric	110	08/18->	DLVB, DMSB								
All engines	x 4, HITACHI, COIL ON PLUG, incl. spark plug connector									9.6536 C10		
40 TFSI Mild Hybrid	Petrol/ Electric	150	05/20->	DMSA								
All engines	x 4, HITACHI, COIL ON PLUG, incl. spark plug connector									9.6536 C10		
40 TFSI Mild Hybrid quattro	Petrol/ Electric	150	06/20->	DMSA								
All engines	x 4, HITACHI, COIL ON PLUG, incl. spark plug connector									9.6536 C10		
45 TFSI Mild Hybrid	Petrol/ Electric	180	07/18-02/20	DKNA								
All engines	x 4, HITACHI, COIL ON PLUG, incl. spark plug connector									9.6536 C10		
45 TFSI Mild Hybrid quattro	Petrol/ Electric	180	07/18-02/20	DKNA								
All engines	x 4, HITACHI, COIL ON PLUG, incl. spark plug connector									9.6536 C10		
45 TFSI Mild Hybrid quattro	Petrol/ Electric	195	10/19->	DMTA, DPAA								
All engines	x 4, HITACHI, COIL ON PLUG, incl. spark plug connector									9.6536 C10		
A6 I												
1.8 quattro	Petrol	92	12/95-12/97	ADR								
All engines												4.9491
2.0	Petrol	74	06/94-12/97	AAE								
All engines	version Bosch						2.7530/36PHT	3.7573/21RS				
All engines												4.8768

A10	CONDENSER	**A20**	CONTACT SET	**A40**	DISTRIBUTOR CAP	**A50**	ROTOR	**A70**	PICK-UP
C10	COIL	**C20**	IGNITION MODULE	**C30**	ELECTRONIC IGNITION KIT	**E01**	IGNITION CABLE SET		

The present application list is a brief version. For the detailed information about the possibility of installation on a specific vehicle, please refer to our web-catalogue http://catalogo.facet.eu/

Vehicle	alim.	kW	Date	Engine	FUNCTIONS ON THE VEHICLE							
					A10	A20	A40	A50	A70	C10 - C30	C20	E01
2.0	Petrol	79	06/94-07/96	ENGINE ADW								
All engines	version Bosch						2.7530/36PHT	3.7573/21RS				
All engines												4.8768
2.0	Petrol	85	06/94-12/97	ENGINE ABK								
All engines	version Bosch						2.7530/36PHT	3.7573/21RS				
All engines												4.8768
2.0 16V	Petrol	103	06/94-12/97	ENGINE ACE								
All engines	version Bosch						2.7530/18PHT					
All engines												4.9356
2.0 16V quattro	Petrol	103	06/94-12/97	ENGINE ACE								
All engines	version Bosch						2.7530/18PHT					
All engines												4.9356
2.3	Petrol	98	06/94-12/95	ENGINE 7M15A-FKS								
All engines	version Bosch						2.7530/1PHT	3.7573/21RS				
All engines	ch. 4A-T-000 001 ->											4.9682
2.3 quattro	Petrol	98	06/94-12/95	ENGINE 7M15A-FKS								
All engines	version Bosch						2.7530/1PHT	3.7573/21RS				
2.4	Petrol	110	07/95-12/97	ENGINE AFM								
All engines											9.4051	
2.6	Petrol	102	06/94-10/97	ENGINE ACZ								
All engines											9.4051	
2.6	Petrol	110	06/94-12/97	ENGINE ABC								
All engines											9.4051	
2.6 quattro	Petrol	102	06/94-04/97	ENGINE ACZ								
All engines											9.4051	
2.6 quattro	Petrol	110	06/94-12/97	ENGINE ABC								
All engines											9.4051	
2.8	Petrol	120	08/95-07/96	ENGINE AEJ								
All engines											9.4051	
2.8	Petrol	128	06/94-12/97	ENGINE AAH, AEJ								
All engines											9.4051	
2.8 quattro	Petrol	128	06/94-12/97	ENGINE AAH, AEJ								
All engines											9.4051	

A10	CONDENSER	A20	CONTACT SET	A40	DISTRIBUTOR CAP	A50	ROTOR	A70	PICK-UP
C10	COIL	C20	IGNITION MODULE	C30	ELECTRONIC IGNITION KIT	E01	IGNITION CABLE SET		

The present application list is a brief version. For the detailed information about the possibility of installation on a specific vehicle, please refer to our web-catalogue http://catalogo.facet.eu/

Vehicle	alim.	kW	Date	Engine	FUNCTIONS ON THE VEHICLE: A10	A20	A40	A50	A70	C10 - C30	C20	E01
S6 4.2 quattro	Petrol	213	06/94-12/97	AEC			2.7530/18PHT					
S6 Plus quattro	Petrol	240	04/96-12/97	AHK						9.6254S C10 9.6322 C10	9.4076	

A6 II

Vehicle	alim.	kW	Date	Engine	A10	A20	A40	A50	A70	C10 - C30	C20	E01
1.8	Petrol	85	05/97-01/05	AFY								4.9491
1.8	Petrol	92	07/97-01/05	AJP, AQE, ARH						9.6345 C10		
1.8 T	Petrol	110	01/97-01/05	1HN9, AEB, ANB, APU, ARK, AWT						9.6254S C10 9.6329 C10	9.4072 9.4076	
1.8 T	Petrol	132	12/97-01/05	AJL						9.6254S C10	9.4072	
1.8 T quattro	Petrol	110	02/97-01/05	1HN9, AEB, ANB, APU, ARK, AWT						9.6254S C10 9.6329 C10	9.4072 9.4076	
1.8 T quattro	Petrol	132	12/97-01/05	AJL						9.6254S C10	9.4072	
2.0	Petrol	96	08/01-01/05	ALT						9.6336 C10		
2.7 T	Petrol	169	02/99-01/05	AJK						9.6254S C10		
2.7 T quattro	Petrol	169	12/97-01/05	AJK, AZA						9.6254S C10		
2.7 T quattro	Petrol	184	08/01-01/05	1457L77, ARE						9.6254S C10 9.6329 C10		

Engine	Information
All engines	Qty: 2, version Bosch
All engines	without spark plug connector, Qty: 8
All engines	incl. spark plug connector, Qty: 8
All engines	Qty: 2
All engines	
All engines	x 4, COIL ON PLUG, incl. spark plug connector
Eng. AEB, ANB, APU, ARK	x 4, COIL ON PLUG
Eng. AWT	x 4, COIL ON PLUG, incl. spark plug connector
Eng. 1HN9, ANB, APU, ARK	ch. 4B-W-014 501 ->
Eng. 1HN9	->ch. 4B-W-014 500
All engines	x 4, COIL ON PLUG
All engines	
All engines	x 4, Colour:Red, COIL ON PLUG, incl. spark plug connector
All engines	x 6, COIL ON PLUG
All engines	x 6, COIL ON PLUG
Eng. ARE	x 6, COIL ON PLUG
Eng. 1457L77	x 6, COIL ON PLUG, incl. spark plug connector

A10	CONDENSER	A20	CONTACT SET	A40	DISTRIBUTOR CAP	A50	ROTOR	A70	PICK-UP
C10	COIL	C20	IGNITION MODULE	C30	ELECTRONIC IGNITION KIT	E01	IGNITION CABLE SET		

The present application list is a brief version. For the detailed information about the possibility of installation on a specific vehicle, please refer to our web-catalogue http://catalogo.facet.eu/

Vehicle	alim.	kW	Date	Engine	FUNCTIONS ON THE VEHICLE							
					A10	A20	A40	A50	A70	C10 - C30	C20	E01
3.0	Petrol	160	06/01-01/05	BBJ								
All engines	x 6, Colour:Red, COIL ON PLUG, incl. spark plug connector									9.6336 C10		
3.0	Petrol	162	08/01-01/05	ASN								
All engines	x 6, Colour:Red, COIL ON PLUG, incl. spark plug connector									9.6336 C10		
3.0 quattro	Petrol	160	06/01-01/05	BBJ								
All engines	x 6, Colour:Red, COIL ON PLUG, incl. spark plug connector									9.6336 C10		
3.0 quattro	Petrol	162	08/01-01/05	ASN								
All engines	x 6, Colour:Red, COIL ON PLUG, incl. spark plug connector									9.6336 C10		
4.2 quattro	Petrol	220	11/98-01/05	ARS, ASG								
All engines	x 8, COIL ON PLUG, incl. spark plug connector									9.6345 C10		
RS6 plus quattro	Petrol	353	04/04-01/05	BRV								
All engines	RS6 Quattro, x 8, COIL ON PLUG, incl. spark plug connector									9.6345 C10		
RS6 quattro	Petrol	331	07/02-01/05	BCY								
All engines	RS6 Quattro, x 8, COIL ON PLUG, incl. spark plug connector									9.6345 C10		
S6 quattro	Petrol	250	09/99-01/05	ANK, AQJ								
All engines	S6 Quattro, x 8, COIL ON PLUG, incl. spark plug connector									9.6345 C10		
A6 III												
2.0 TFSI	Petrol	125	06/05-08/11	BPJ, BYK								
Eng. BPJ	x 4, ELDOR, Housing Colour:Black, COIL ON PLUG, incl. spark plug connector									9.6326 C10		
Eng. BYK	Qty: 4									9.6326 C10		
2.4	Petrol	130	05/04-10/08	BDW								
All engines	x 6, Colour:Red, COIL ON PLUG, incl. spark plug connector									9.6327 C10		
2.4 [CHN]	Petrol	130	04/05->	BDW								
All engines	Qty: 6									9.6327 C10		
2.4 quattro	Petrol	130	01/05-10/08	BDW								
All engines	x 6, Colour:Red, COIL ON PLUG, incl. spark plug connector									9.6327 C10		
2.8 FSI	Petrol	140	10/08-08/11	CCDA								
All engines	x 6, Colour:Red, COIL ON PLUG, incl. spark plug connector									9.6327 C10		
2.8 FSI	Petrol	154	11/06-10/08	BDX								
All engines	x 6, Colour:Red, COIL ON PLUG, incl. spark plug connector									9.6327 C10		

A10	CONDENSER	A20	CONTACT SET	A40	DISTRIBUTOR CAP	A50	ROTOR	A70	PICK-UP
C10	COIL	C20	IGNITION MODULE	C30	ELECTRONIC IGNITION KIT	E01	IGNITION CABLE SET		

The present application list is a brief version. For the detailed information about the possibility of installation on a specific vehicle, please refer to our web-catalogue http://catalogo.facet.eu/

Vehicle	alim.	kW	Date	Engine	FUNCTIONS ON THE VEHICLE							
					A10	A20	A40	A50	A70	C10 - C30	C20	E01
2.8 FSI	Petrol	162	10/08-08/11	ENGINE CCEA								
Engine: All engines — Information: x 6, Colour:Red, COIL ON PLUG, incl. spark plug connector										9.6327 C10		
2.8 FSI quattro	Petrol	140	10/08-08/11	ENGINE CCDA								
Engine: All engines — Information: x 6, Colour:Red, COIL ON PLUG, incl. spark plug connector										9.6327 C10		
2.8 FSI quattro	Petrol	154	06/07-10/08	ENGINE BDX								
Engine: All engines — Information: x 6, Colour:Red, COIL ON PLUG, incl. spark plug connector										9.6327 C10		
2.8 FSI quattro	Petrol	162	10/08-08/11	ENGINE CCEA								
Engine: All engines — Information: x 6, Colour:Red, COIL ON PLUG, incl. spark plug connector										9.6327 C10		
3.0	Petrol	160	08/04-05/06	ENGINE BBJ								
Engine: All engines — Information: x 6, Colour:Red, COIL ON PLUG, incl. spark plug connector										9.6336 C10		
3.0 [CHN]	Petrol	160	04/05->	ENGINE BBJ								
Engine: All engines — Information: Qty: 6										9.6336 C10		
3.0 quattro	Petrol	160	05/04-05/06	ENGINE BBJ								
Engine: All engines — Information: x 6, Colour:Red, COIL ON PLUG, incl. spark plug connector										9.6336 C10		
3.0 TFSI quattro	Petrol	213	10/08-08/11	ENGINE CAJA								
Engine: All engines — Information: x 6, Colour:Red, COIL ON PLUG, incl. spark plug connector										9.6327 C10		
3.0 TFSI quattro	Petrol	220	10/08-08/11	ENGINE CCAA								
Engine: All engines — Information: x 6, Colour:Red, COIL ON PLUG, incl. spark plug connector										9.6327 C10		
3.2 FSI	Petrol	188	05/04-05/09	ENGINE AUK, BKH								
Engine: All engines — Information: x 6, Colour:Red, COIL ON PLUG, incl. spark plug connector										9.6327 C10		
3.2 FSI	Petrol	195	05/09-03/11	ENGINE CALA								
Engine: All engines — Information: x 6, Colour:Red, COIL ON PLUG, incl. spark plug connector										9.6327 C10		
3.2 FSI quattro	Petrol	183	09/06-10/08	ENGINE BYU								
Engine: All engines — Information: x 6, Colour:Red, COIL ON PLUG, incl. spark plug connector										9.6327 C10		
3.2 FSI quattro	Petrol	188	05/04-10/08	ENGINE AUK, BKH								
Engine: All engines — Information: x 6, Colour:Red, COIL ON PLUG, incl. spark plug connector										9.6327 C10		
4.2 FSI quattro	Petrol	257	05/06-08/11	ENGINE BVJ								
Engine: All engines — Information: x 8, Colour:Red, COIL ON PLUG, incl. spark plug connector										9.6327 C10		
4.2 quattro	Petrol	246	05/04-05/06	ENGINE BAT								
Engine: All engines — Information: x 8, Colour:Red, COIL ON PLUG, incl. spark plug connector										9.6333 C10		

A10	CONDENSER	A20	CONTACT SET	A40	DISTRIBUTOR CAP	A50	ROTOR	A70	PICK-UP
C10	COIL	C20	IGNITION MODULE	C30	ELECTRONIC IGNITION KIT	E01	IGNITION CABLE SET		

The present application list is a brief version. For the detailed information about the possibility of installation on a specific vehicle, please refer to our web-catalogue http://catalogo.facet.eu/

Vehicle	alim.	kW	Date	Engine	FUNCTIONS ON THE VEHICLE: A10	A20	A40	A50	A70	C10 - C30	C20	E01
RS6 quattro	Petrol	426	04/08-08/10	**BUH**								
All engines	RS6 Quattro, x 10, Colour:Red, COIL ON PLUG, incl. spark plug connector									9.6327 C10		
S6 quattro	Petrol	320	03/06-08/11	**BXA**								
All engines	S6 Quattro, x 10, Colour:Red, COIL ON PLUG, incl. spark plug connector									9.6327 C10		
A6 IV												
1.8 TFSI	Petrol	140	09/14-09/18	**CYGA**								
All engines	->year 01/05/15, x 4, Colour:Black, COIL ON PLUG, incl. spark plug connector									9.6536 C10		
2.0 TFSI	Petrol	132	05/11-09/18	**CDNB**								
All engines	x 4, ELDOR, Housing Colour:Black, COIL ON PLUG, incl. spark plug connector									9.6326 C10		
2.0 TFSI	Petrol	155	03/11-05/13	**CAEB**								
All engines	x 4, ELDOR, Housing Colour:Black, COIL ON PLUG, incl. spark plug connector									9.6326 C10		
2.0 TFSI	Petrol	162	05/13->	**CAED**								
All engines	Qty: 4									9.6326 C10		
All engines	x 4, ELDOR, Housing Colour:Black, COIL ON PLUG, incl. spark plug connector									9.6326 C10		
2.0 TFSI	Petrol	185	09/14-09/18	**CYNB, CYPA**								
All engines	->year 01/05/15, x 4, HITACHI, COIL ON PLUG, incl. spark plug connector ---------- 01/02/18 ->, x 4, HITACHI, COIL ON PLUG, incl. spark plug connector									9.6536 C10		
2.0 TFSI hybrid	Petrol/ Electric	155	11/11-09/18	**CHJA**								
All engines	x 4, ELDOR, Housing Colour:Black, COIL ON PLUG, incl. spark plug connector									9.6326 C10		
2.0 TFSI quattro	Petrol	155	05/12-05/13	**CAEB**								
All engines	x 4, ELDOR, Housing Colour:Black, COIL ON PLUG, incl. spark plug connector									9.6326 C10		
2.0 TFSI quattro	Petrol	185	05/14-09/18	**CYNB, CYPA**								
All engines	->year 01/05/15, x 4, HITACHI, COIL ON PLUG, incl. spark plug connector									9.6536 C10		
2.8 FSI	Petrol	150	11/10-04/15	**CHVA**								
All engines	x 6, Colour:Red, COIL ON PLUG, incl. spark plug connector									9.6327 C10		
2.8 FSI quattro	Petrol	150	11/10-04/15	**CHVA**								
All engines	x 6, Colour:Red, COIL ON PLUG, incl. spark plug connector									9.6327 C10		
2.8 FSI quattro	Petrol	162	09/14-09/18	**CVPA**								
All engines	x 6, Colour:Red, COIL ON PLUG, incl. spark plug connector									9.6327 C10		

A10	CONDENSER	**A20**	CONTACT SET	**A40**	DISTRIBUTOR CAP	**A50**	ROTOR	**A70**	PICK-UP
C10	COIL	**C20**	IGNITION MODULE	**C30**	ELECTRONIC IGNITION KIT	**E01**	IGNITION CABLE SET		

The present application list is a brief version. For the detailed information about the possibility of installation on a specific vehicle, please refer to our web-catalogue http://catalogo.facet.eu/

Vehicle	alim.	kW	Date	Engine	FUNCTIONS ON THE VEHICLE A10	A20	A40	A50	A70	C10 - C30	C20	E01
3.0 TFSI	Petrol	250	09/14->	ENGINE: CREH								
Engine: All engines	Information: Qty: 6									9.6327 C10		
3.0 TFSI quattro	Petrol	220	11/10-05/12	ENGINE: CGWB								
Engine: All engines	Information: x 6, Colour:Red, COIL ON PLUG, incl. spark plug connector									9.6327 C10		
3.0 TFSI quattro	Petrol	228	03/11-09/18	ENGINE: CGWD, CGXB, CTUA								
Engine: All engines	Information: x 6, Colour:Red, COIL ON PLUG, incl. spark plug connector									9.6327 C10		
3.0 TFSI quattro	Petrol	245	09/14-09/18	ENGINE: CREC								
Engine: All engines	Information: x 6, Colour:Red, COIL ON PLUG, incl. spark plug connector									9.6327 C10		
3.0 TFSI quattro	Petrol	250	09/16-09/18	ENGINE: CREH								
Engine: All engines	Information: x 6, Colour:Red, COIL ON PLUG, incl. spark plug connector									9.6327 C10		
A6 V												
40 TFSI	Petrol	150	09/20->	ENGINE: DMTC								
Engine: All engines	Information: x 4, HITACHI, COIL ON PLUG, incl. spark plug connector									9.6536 C10		
45 TFSI Mild Hybrid	Petrol/ Electric	180	08/18->	ENGINE: DKNA, DLHA								
Engine: All engines	Information: x 4, HITACHI, COIL ON PLUG, incl. spark plug connector									9.6536 C10		
45 TFSI Mild Hybrid	Petrol/ Electric	195	05/20->	ENGINE: DMTA								
Engine: All engines	Information: x 4, HITACHI, COIL ON PLUG, incl. spark plug connector									9.6536 C10		
45 TFSI Mild Hybrid quattro	Petrol/ Electric	180	08/18->	ENGINE: DKNA, DLHA								
Engine: All engines	Information: x 4, HITACHI, COIL ON PLUG, incl. spark plug connector									9.6536 C10		
45 TFSI Mild Hybrid quattro	Petrol/ Electric	195	05/20->	ENGINE: DMTA								
Engine: All engines	Information: x 4, HITACHI, COIL ON PLUG, incl. spark plug connector									9.6536 C10		
50 TFSI e quattro	Petrol/ Electric	185	11/19->	ENGINE: DLGA								
Engine: All engines	Information: x 4, HITACHI, COIL ON PLUG, incl. spark plug connector									9.6536 C10		
50 TFSi e quattro	Petrol/ Electric	195	02/21->	ENGINE: DRYA								
Engine: All engines	Information: x 4, HITACHI, COIL ON PLUG, incl. spark plug connector									9.6536 C10		
50 TFSI e quattro	Petrol/ Electric	220	11/19->	ENGINE: DLGA, DRYA								
Engine: All engines	Information: x 4, HITACHI, COIL ON PLUG, incl. spark plug connector									9.6536 C10		

A10	CONDENSER	**A20**	CONTACT SET	**A40**	DISTRIBUTOR CAP	**A50**	ROTOR	**A70**	PICK-UP
C10	COIL	**C20**	IGNITION MODULE	**C30**	ELECTRONIC IGNITION KIT	**E01**	IGNITION CABLE SET		

The present application list is a brief version. For the detailed information about the possibility of installation on a specific vehicle, please refer to our web-catalogue http://catalogo.facet.eu/

Vehicle	alim.	kW	Date	Engine	FUNCTIONS ON THE VEHICLE A10	A20	A40	A50	A70	C10 - C30	C20	E01
55 TFSI e quattro	Petrol/ Electric	185	11/19->	**DLGA**						9.6536 C10		
All engines	x 4, HITACHI, COIL ON PLUG, incl. spark plug connector											
55 TFSI e quattro	Petrol/ Electric	195	02/21->	**DRYA**						9.6536 C10		
All engines	x 4, HITACHI, COIL ON PLUG, incl. spark plug connector											
55 TFSI e quattro	Petrol/ Electric	270	11/19->	**DLGA**						9.6536 C10		
All engines	x 4, HITACHI, COIL ON PLUG, incl. spark plug connector											
A7												
2.0 50 TFSi e	Diesel/ Electro	220	11/19->	**DLGA**						9.6536 C10		
All engines	x 4, HITACHI, COIL ON PLUG, incl. spark plug connector											
45 TFSI Mild Hybrid	Petrol/ Electric	180	07/18->	**DKNA, DLHA**						9.6536 C10		
All engines	x 4, HITACHI, COIL ON PLUG, incl. spark plug connector											
45 TFSI Mild hybrid quattro	Petrol/ Electric	180	07/18->	**DKNA, DLHA**						9.6536 C10		
All engines	x 4, HITACHI, COIL ON PLUG, incl. spark plug connector											
55 TFSI e quattro	Petrol/ Electric	185	07/19->	**DLGA**						9.6536 C10		
All engines	x 4, HITACHI, COIL ON PLUG, incl. spark plug connector											
55 TFSI e quattro	Petrol/ Electric	270	07/19->	**DLGA**						9.6536 C10		
All engines	x 4, HITACHI, COIL ON PLUG, incl. spark plug connector											
A7 SPORTBACK												
2.0 TFSI	Petrol	185	09/14-05/18	**CYPA**						9.6536 C10		
All engines	->year 01/03/15, x 4, HITACHI, COIL ON PLUG, incl. spark plug connector											
2.0 TFSI quattro	Petrol	185	05/15-05/18	**CYNB**						9.6327 C10		
All engines	15/04/16 ->, Qty: 4											
2.5 FSI	Petrol	150	05/12->	**CLXB**						9.6327 C10		
All engines	Qty: 6											
2.8 FSI	Petrol	150	02/11-03/15	**CHVA**						9.6327 C10		
All engines	x 6, Colour:Red, COIL ON PLUG, incl. spark plug connector											
2.8 FSI quattro	Petrol	150	10/10-03/15	**CHVA, CNYA**								
Eng. CHVA	x 6, Colour:Red, COIL ON PLUG, incl. spark plug connector									9.6327 C10		
Eng. CNYA	Qty: 6									9.6327 C10		

A10	CONDENSER	**A20**	CONTACT SET	**A40**	DISTRIBUTOR CAP	**A50**	ROTOR	**A70**	PICK-UP
C10	COIL	**C20**	IGNITION MODULE	**C30**	ELECTRONIC IGNITION KIT	**E01**	IGNITION CABLE SET		

The present application list is a brief version. For the detailed information about the possibility of installation on a specific vehicle, please refer to our web-catalogue http://catalogo.facet.eu/

Vehicle	alim.	kW	Date	Engine	FUNCTIONS ON THE VEHICLE A10	A20	A40	A50	A70	C10 - C30	C20	E01
2.8 FSI quattro	Petrol	162	09/14-05/18	**CVPA**								
Engine: All engines — Information: x 6, Colour:Red, COIL ON PLUG, incl. spark plug connector										9.6327 C10		
2.8 TFSI	Petrol	162	09/14->	**CVPA**								
Engine: All engines — Information: Qty: 6										9.6327 C10		
3.0 TFSI	Petrol	250	05/14->	**CREH**								
Engine: All engines — Information: Qty: 6										9.6327 C10		
3.0 TFSI quattro	Petrol	220	10/10-05/12	**CGWB, CHMA**								
Engine: Eng. CGWB — Information: x 6, Colour:Red, COIL ON PLUG, incl. spark plug connector										9.6327 C10		
Engine: Eng. CHMA — Information: Qty: 6										9.6327 C10		
3.0 TFSI quattro	Petrol	228	01/11-03/15	**CGWD, CGXB, CTTA, CTUA**								
Engine: Eng. CGWD, CGXB, CTTA — Information: x 6, Colour:Red, COIL ON PLUG, incl. spark plug connector										9.6327 C10		
Engine: Eng. CTUA — Information: Qty: 6										9.6327 C10		
3.0 TFSI quattro	Petrol	245	05/14-05/18	**CREC**								
Engine: All engines — Information: x 6, Colour:Red, COIL ON PLUG, incl. spark plug connector										9.6327 C10		
A8 I												
2.8	Petrol	120	07/95-03/96	**AEJ**								
Engine: All engines — Information:											9.4051	
2.8	Petrol	128	03/94-03/96	**AAH**								
Engine: All engines — Information:											9.4051	
2.8 quattro	Petrol	120	07/95-03/96	**AEJ**								
Engine: All engines — Information:											9.4051	
2.8 quattro	Petrol	128	03/94-03/96	**AAH**								
Engine: All engines — Information:											9.4051	
3.7	Petrol	169	07/95-12/98	**AEW, AKJ**								
Engine: Eng. AKJ — Information: without spark plug connector, Qty: 8										9.6254S C10		
Engine: Eng. AKJ — Information: incl. spark plug connector, Qty: 8										9.6322 C10		
Engine: All engines — Information: Qty: 2											9.4076	
3.7	Petrol	191	11/98-09/02	**AKC, AQG**								
Engine: All engines — Information: x 8, COIL ON PLUG, incl. spark plug connector										9.6345 C10		
3.7 quattro	Petrol	169	07/95-11/98	**AEW, AKJ**								
Engine: All engines — Information: Qty: 2											9.4076	
3.7 quattro	Petrol	191	11/98-09/02	**AKC, AQG**								
Engine: All engines — Information: x 8, COIL ON PLUG, incl. spark plug connector										9.6345 C10		

A10	CONDENSER	**A20**	CONTACT SET	**A40**	DISTRIBUTOR CAP	**A50**	ROTOR	**A70**	PICK-UP
C10	COIL	**C20**	IGNITION MODULE	**C30**	ELECTRONIC IGNITION KIT	**E01**	IGNITION CABLE SET		

The present application list is a brief version. For the detailed information about the possibility of installation on a specific vehicle, please refer to our web-catalogue http://catalogo.facet.eu/

Vehicle	alim.	kW	Date	Engine	FUNCTIONS ON THE VEHICLE: A10	A20	A40	A50	A70	C10 - C30	C20	E01
4.2 quattro	Petrol	175	02/99-04/00	ENGINE: ARU								
All engines	x 8, COIL ON PLUG, incl. spark plug connector									9.6345 C10		
4.2 quattro	Petrol	180	03/94-07/96	ENGINE: AEM								
All engines	01/08/95 ->, ch. 4DT000221 ->, x 8, COIL ON PLUG									9.6254S C10		
All engines	Qty: 2										9.4076	
4.2 quattro	Petrol	210	07/95-09/98	ENGINE: AGH								
All engines	ch. 4D-T-000 221 ->, without spark plug connector, Qty: 8									9.6254S C10		
All engines	ch. 4D-T-000 221 ->, incl. spark plug connector, Qty: 8									9.6322 C10		
All engines	Qty: 2										9.4076	
4.2 quattro	Petrol	220	03/94-11/98	ENGINE: ABZ, AKG								
All engines	01/08/95 ->, ch. 4DT000221 ->, ->ch. 4DX004999, x 8, COIL ON PLUG									9.6254S C10		
All engines	01/01/99 ->, ch. DX005001 ->, x 8, COIL ON PLUG, incl. spark plug connector									9.6345 C10		
All engines	Qty: 2										9.4076	
4.2 quattro	Petrol	224	09/96-12/99	ENGINE: ABZ								
All engines	ch. 4D-X-005 001 ->, Qty: 8									9.6345 C10		
4.2 quattro	Petrol	228	11/98-09/02	ENGINE: AQF, AUW								
All engines	->year 01/12/98, ->ch. 4DX004999, x 8, COIL ON PLUG									9.6254S C10		
All engines	01/01/99 ->, ch. DX005001 ->, x 8, COIL ON PLUG, incl. spark plug connector									9.6345 C10		
S8 quattro	Petrol	250	07/96-06/99	ENGINE: 2C2CNG, AHC, AKH								
Eng. AHC, AKH	S8 Quattro, x 8, COIL ON PLUG									9.6254S C10		
Eng. 2C2CNG, AKH	Qty: 2										9.4076	
S8 quattro	Petrol	265	06/99-09/02	ENGINE: AQH, AVP, AYS, BCS								
All engines	S8 Quattro, x 8, COIL ON PLUG, incl. spark plug connector									9.6345 C10		
Eng. AYS, BCS	Qty: 8									9.6345 C10		
A8 II												
2.8 FSI	Petrol	154	08/07-07/10	ENGINE: BDX								
All engines	x 6, Colour:Red, COIL ON PLUG, incl. spark plug connector									9.6327 C10		
2.8 FSI	Petrol	170	01/09-07/10	ENGINE: CJBA								
All engines	Qty: 6									9.6327 C10		
3.0	Petrol	160	07/03-05/06	ENGINE: BBJ								
All engines	x 6, Colour:Red, COIL ON PLUG, incl. spark plug connector									9.6336 C10		
3.0	Petrol	162	07/03-05/05	ENGINE: ASN								
All engines	x 6, Colour:Red, COIL ON PLUG, incl. spark plug connector									9.6336 C10		

A10	CONDENSER	A20	CONTACT SET	A40	DISTRIBUTOR CAP	A50	ROTOR	A70	PICK-UP
C10	COIL	C20	IGNITION MODULE	C30	ELECTRONIC IGNITION KIT	E01	IGNITION CABLE SET		

The present application list is a brief version. For the detailed information about the possibility of installation on a specific vehicle, please refer to our web-catalogue http://catalogo.facet.eu/

Vehicle	alim.	kW	Date	Engine	FUNCTIONS ON THE VEHICLE A10	A20	A40	A50	A70	C10 - C30	C20	E01
3.0 quattro	Petrol	160	11/03-05/04	BBJ						9.6336 C10		
3.0 quattro	Petrol	162	07/03-05/05	ASN						9.6336 C10		
3.2 FSI	Petrol	191	06/05-07/10	BPK						9.6327 C10		
3.2 FSI quattro	Petrol	191	06/05-07/10	BPK						9.6327 C10		
3.7 quattro	Petrol	206	10/02-05/06	BFL						9.6333 C10		
4.2 FSI quattro	Petrol	257	06/06-07/10	BVJ						9.6327 C10		
4.2 quattro	Petrol	246	10/02-07/10	BFM						9.6333 C10		
S8 quattro	Petrol	324	09/06-07/10	BSM						9.6327 C10		
S8 quattro	Petrol	331	06/06-07/10	BSM						9.6327 C10		
A8 III												
2.0 TFSI hybrid	Petrol/ Electric	155	02/12-11/15	CHJA						9.6326 C10		
2.5 TFSI	Petrol	150	07/12-06/16	CPAA, CVBA						9.6327 C10		
3.0 TDI quattro	Diesel	176	11/12-06/16	CPNA, CPNB						9.6327 C10		
3.0 TFSI quattro	Petrol	213	07/10-04/14	CGWA, CREG						9.6327 C10		
3.0 TFSI quattro	Petrol	228	11/11-01/18	CGWD, CREA						9.6327 C10		

Engine	Information
All engines	x 6, Colour:Red, COIL ON PLUG, incl. spark plug connector
All engines	x 8, Colour:Red, COIL ON PLUG, incl. spark plug connector
All engines	S8 Quattro, x 10, Colour:Red, COIL ON PLUG, incl. spark plug connector
All engines	x 4, ELDOR, Housing Colour:Black, COIL ON PLUG, incl. spark plug connector

A10	CONDENSER	A20	CONTACT SET	A40	DISTRIBUTOR CAP	A50	ROTOR	A70	PICK-UP
C10	COIL	C20	IGNITION MODULE	C30	ELECTRONIC IGNITION KIT	E01	IGNITION CABLE SET		

The present application list is a brief version. For the detailed information about the possibility of installation on a specific vehicle, please refer to our web-catalogue http://catalogo.facet.eu/

Vehicle	alim.	kW	Date	Engine	FUNCTIONS ON THE VEHICLE A10	A20	A40	A50	A70	C10 - C30	C20	E01
3.0 TFSI quattro	Petrol	245	06/10-01/18	**CGXC, CMDA, CREC, CTDA, CTUB**								
Eng. CGXC, CMDA	x 6, Colour:Red, COIL ON PLUG, incl. spark plug connector									9.6327 C10		
Eng. CREC, CTDA, CTUB	Qty: 6									9.6327 C10		
4.2 FSI quattro	Petrol	273	11/09-12/12	**CDRA**								
All engines	x 8, Colour:Red, COIL ON PLUG, incl. spark plug connector									9.6327 C10		
ALLROAD												
2.7 T quattro	Petrol	184	05/00-08/05	**1457L77, ARE**								
All engines	x 6, COIL ON PLUG									9.6254S C10		
All engines	x 6, COIL ON PLUG, incl. spark plug connector									9.6329 C10		
4.2 V8 quattro	Petrol	220	07/02-08/05	**BAS**								
All engines	x 8, Colour:Red, COIL ON PLUG, incl. spark plug connector									9.6333 C10		
CABRIOLET												
1.8	Petrol	92	01/97-08/00	**ADR**								
All engines												4.9491
2.0 16V	Petrol	103	06/95-07/96	**ACE**								
All engines	version Bosch						2.7530/18PHT					
2.0 E	Petrol	85	01/93-07/98	**ABK**								
All engines	version Bosch						2.7530/36PHT	3.7573/21RS				
All engines	->ch. 8G-P-015 000									9.8114 C30		
All engines												4.8768
2.3 E	Petrol	98	05/91-07/94	**NG**								
All engines	version Bosch						2.7530/1PHT	3.7573/21RS				
All engines												4.9682
2.6	Petrol	102	05/95-08/00	**ACZ**								
All engines											9.4051	
2.6	Petrol	110	06/93-08/00	**ABC**								
All engines											9.4051	
2.8	Petrol	128	11/92-08/00	**AAH**								
All engines											9.4051	
COUPE												
1.8	Petrol	82	08/89-07/91	**DZ**								
All engines	version Bosch						2.7530/36PHT	3.7555RS	8.2719			
All engines										9.6027 C10	9.4007	4.8768
2.0	Petrol	82	03/90-07/90	**3A**								
All engines	version Bosch						2.7530/36PHT	3.7573/21RS				

A10	CONDENSER	**A20**	CONTACT SET	**A40**	DISTRIBUTOR CAP	**A50**	ROTOR	**A70**	PICK-UP
C10	COIL	**C20**	IGNITION MODULE	**C30**	ELECTRONIC IGNITION KIT	**E01**	IGNITION CABLE SET		

The present application list is a brief version. For the detailed information about the possibility of installation on a specific vehicle, please refer to our web-catalogue http://catalogo.facet.eu/

Vehicle	alim.	kW	Date	Engine	FUNCTIONS ON THE VEHICLE A10	A20	A40	A50	A70	C10 - C30	C20	E01
2.0	Petrol	82	03/90-07/90	**3A**								
All engines												4.8768
2.0	Petrol	83	05/89-03/90	**3A**								
All engines	version Bosch						2.7530/36PHT	3.7573/21RS				
All engines												4.8768
2.0	Petrol	85	05/89-12/96	**AAD, ABK**								
All engines	version Bosch						2.7530/36PHT	3.7573/21RS				
Eng. ABK	->ch. 8B-P-015 000									9.8114 C30		
All engines												4.8768
2.0 16 V	Petrol	101	01/92-07/92	**6A**								
All engines	version Bosch						2.7530/18PHT					
2.0 16 V	Petrol	103	08/92-12/96	**ACE**								
All engines	version Bosch						2.7530/18PHT					
2.0 20 V	Petrol	118	08/89-07/91	**NM**								
All engines	version Bosch						2.7530/1PHT					
2.0 20 V quattro	Petrol	118	08/89-07/91	**NM**								
All engines	version Bosch						2.7530/1PHT					
2.2	Petrol	100	11/88-07/91	**9C54**								
All engines	version Bosch						2.7530/1PHT	3.7555RS	8.2719			
All engines										9.6027 C10	9.4007	4.9682
2.2 GT	Petrol	100	09/84-10/88	**9C54**								
All engines	version Bosch						2.7530/1PHT					
All engines	ch. 85-H-000 001 ->, version Bosch							3.7555RS				
All engines	->ch. 85-G-220 000, version Bosch							3.7573/16RS				
All engines	->ch. 85-F-220 000									9.6025 C10		
All engines	ch. 85-G-000 001 ->									9.6027 C10		
All engines	->ch. 85-H-070 000										9.4004	
All engines	ch. 85-J-000 001 ->										9.4007	
2.2 quattro	Petrol	100	10/84-07/91	**9C54**								
All engines	version Bosch						2.7530/1PHT					
All engines	ch. 85-H-000 001 ->, version Bosch							3.7555RS				
All engines	->ch. 85-G-220 000, version Bosch							3.7573/16RS				
All engines	01/11/88 ->, version Bosch								8.2719			
All engines	->ch. 85-F-220 000									9.6025 C10		
All engines	ch. 85-G-000 001 ->									9.6027 C10		
All engines	->ch. 85-H-070 000										9.4004	
All engines	ch. 85-J-000 001 ->										9.4007	
All engines												4.9682
2.2 quattro	Petrol	88	08/85-10/88	**JT**								
All engines	version Bosch						2.7530/1PHT	3.7555RS				

A10	CONDENSER	**A20**	CONTACT SET	**A40**	DISTRIBUTOR CAP	**A50**	ROTOR	**A70**	PICK-UP
C10	COIL	**C20**	IGNITION MODULE	**C30**	ELECTRONIC IGNITION KIT	**E01**	IGNITION CABLE SET		

The present application list is a brief version. For the detailed information about the possibility of installation on a specific vehicle, please refer to our web-catalogue http://catalogo.facet.eu/

Vehicle	alim.	kW	Date	Engine	FUNCTIONS ON THE VEHICLE							
					A10	A20	A40	A50	A70	C10 - C30	C20	E01
2.2 quattro	Petrol	88	08/85-10/88	ENGINE JT								
All engines			->ch. 85-F-220 000							9.6025 C10		
All engines			ch. 85-G-000 001 ->							9.6027 C10		
All engines			->ch. 85-H-070 000								9.4004	
All engines			ch. 85-J-000 001 ->								9.4007	
2.3	Petrol	100	10/88-07/94	ENGINE NG								
All engines			version Bosch				2.7530/1PHT	3.7573/21RS				
All engines												4.9682
2.3	Petrol	98	03/90-12/96	ENGINE NG								
All engines			version Bosch				2.7530/1PHT	3.7573/21RS				
All engines												4.9682
2.3 20V	Petrol	123	08/90-07/91	ENGINE 7A								
All engines			version Bosch				2.7530/1PHT					
2.3 20V	Petrol	125	08/89-07/91	ENGINE 7A								
All engines			version Bosch				2.7530/1PHT					
2.3 20V quattro	Petrol	123	05/90-12/96	ENGINE 7A								
All engines			version Bosch				2.7530/1PHT					
2.3 20V quattro	Petrol	125	11/88-07/91	ENGINE 7A								
All engines			version Bosch				2.7530/1PHT					
2.3 quattro	Petrol	100	11/88-12/92	ENGINE NG								
All engines			version Bosch				2.7530/1PHT	3.7573/21RS				
All engines												4.9682
2.3 quattro	Petrol	98	01/87-12/96	ENGINE NG								
All engines			version Bosch				2.7530/1PHT	3.7573/21RS	8.2719			
All engines												4.9682
2.6	Petrol	110	08/92-12/96	ENGINE ABC								
All engines											9.4051	
2.6 quattro	Petrol	110	08/92-12/96	ENGINE ABC								
All engines											9.4051	
2.8	Petrol	128	09/91-12/96	ENGINE AAH								
All engines											9.4051	
2.8 quattro	Petrol	128	08/91-12/96	ENGINE AAH								
All engines											9.4051	

A10	CONDENSER	**A20**	CONTACT SET	**A40**	DISTRIBUTOR CAP	**A50**	ROTOR	**A70**	PICK-UP
C10	COIL	**C20**	IGNITION MODULE	**C30**	ELECTRONIC IGNITION KIT	**E01**	IGNITION CABLE SET		

The present application list is a brief version. For the detailed information about the possibility of installation on a specific vehicle, please refer to our web-catalogue http://catalogo.facet.eu/

Vehicle	alim.	kW	Date	Engine	FUNCTIONS ON THE VEHICLE A10	A20	A40	A50	A70	C10 - C30	C20	E01
S2	Petrol	162	09/90-09/92	3B								
Engine: All engines	Information: version Bosch						2.7530/1PHT					
S2 quattro	Petrol	162	09/90-09/92	3B								
Engine: All engines	Information: version Bosch						2.7530/1PHT					
Q2												
1.0 TFSI	Petrol	85	10/16-10/20	CHZJ, DKRF								
Engine: All engines	Information: x 3, ELDOR, COIL ON PLUG, incl. spark plug connector, Number of pins:4, incl. spark plug connector									9.6499 C10		
1.4 TFSI	Petrol	110	06/16-08/18	CZEA								
Engine: All engines	Information: x 4, BERU, version 1, version 2, COIL ON PLUG, ELDOR, COIL ON PLUG, incl. spark plug connector, incl. spark plug connector, Number of pins:4, incl. spark plug connector									9.6499 C10		
2.0 TFSI quattro	Petrol	140	05/17->	CZPB, DKZA								
Engine: All engines	Information: 01/04/18 ->, x 4, HITACHI, COIL ON PLUG, incl. spark plug connector									9.6536 C10		
30 TFSI	Petrol	81	08/20->	DLAA								
Engine: All engines	Information: x 3, ELDOR, COIL ON PLUG, incl. spark plug connector, Number of pins:4, incl. spark plug connector									9.6499 C10		
30 TFSI	Petrol	85	07/18-10/20	CHZJ, DKRF								
Engine: All engines	Information: x 3, ELDOR, COIL ON PLUG, incl. spark plug connector, Number of pins:4, incl. spark plug connector									9.6499 C10		
SQ2 TFSI quattro	Petrol	221	08/18->	DNFC, DNUE								
Engine: All engines	Information: SQ2 Quattro, x 4, HITACHI, COIL ON PLUG, incl. spark plug connector									9.6536 C10		
Q3												
1.4 TFSI	Petrol	92	07/16-10/18	CZDB								
Engine: All engines	Information: x 4, ELDOR, COIL ON PLUG, Number of pins:4, incl. spark plug connector									9.6499 C10		
1.4 TSI	Petrol	110	10/13-10/18	CHPB, CZDA, CZEA								
Engine: All engines	Information: x 4, BERU, ELDOR, COIL ON PLUG, incl. spark plug connector, Number of pins:4, incl. spark plug connector									9.6499 C10		
2.0 TFSI	Petrol	147	10/13->	CCTA								
Engine: All engines	Information: Qty: 4									9.6326 C10		
2.0 TFSI quattro	Petrol	125	06/11-04/15	CCZC								
Engine: All engines	Information: x 4, ELDOR, Housing Colour:Black, COIL ON PLUG, incl. spark plug connector									9.6326 C10		
2.0 TFSI quattro	Petrol	147	09/14-10/18	CCTA								
Engine: All engines	Information: x 4, ELDOR, Housing Colour:Black, COIL ON PLUG, incl. spark plug connector									9.6326 C10		

A10	CONDENSER	A20	CONTACT SET	A40	DISTRIBUTOR CAP	A50	ROTOR	A70	PICK-UP
C10	COIL	C20	IGNITION MODULE	C30	ELECTRONIC IGNITION KIT	E01	IGNITION CABLE SET		

The present application list is a brief version. For the detailed information about the possibility of installation on a specific vehicle, please refer to our web-catalogue http://catalogo.facet.eu/

Vehicle	alim.	kW	Date	Engine	FUNCTIONS ON THE VEHICLE: A10	A20	A40	A50	A70	C10 - C30	C20	E01
2.0 TFSI quattro	Petrol	155	06/11-04/15	CPSA								

Engine	Information	A10	A20	A40	A50	A70	C10 - C30	C20	E01
All engines	x 4, ELDOR, Housing Colour:Black, COIL ON PLUG, incl. spark plug connector						9.6326 C10		

RS 2.5 quattro	Petrol	228	10/13-10/18	CTSA

Engine	Information	A10	A20	A40	A50	A70	C10 - C30	C20	E01
All engines	RSQ3 Quattro, x 5, ELDOR, Housing Colour:Black, COIL ON PLUG, incl. spark plug connector						9.6326 C10		

RS 2.5 quattro	Petrol	250	05/13-10/18	CZGA

Engine	Information	A10	A20	A40	A50	A70	C10 - C30	C20	E01
All engines	RSQ3 Quattro, x 5, ELDOR, Housing Colour:Black, COIL ON PLUG, incl. spark plug connector						9.6326 C10		

RS performance 2.5 quattro	Petrol	270	01/15-10/18	CZGB

Engine	Information	A10	A20	A40	A50	A70	C10 - C30	C20	E01
All engines	RSQ3 Quattro, x 5, ELDOR, Housing Colour:Black, COIL ON PLUG, incl. spark plug connector						9.6326 C10		

Q5 I

2.0 Hybrid quattro	Petrol/ Electric	180	09/12-05/16	CHJA

Engine	Information	A10	A20	A40	A50	A70	C10 - C30	C20	E01
All engines	x 4, ELDOR, Housing Colour:Black, COIL ON PLUG, incl. spark plug connector						9.6326 C10		

2.0 TFSI	Petrol	130	11/08->	CDNA

Engine	Information	A10	A20	A40	A50	A70	C10 - C30	C20	E01
All engines	Qty: 6						9.6326 C10		

2.0 TFSI Hybrid quattro	Petrol/ Electric	155	06/11-06/16	CHJA

Engine	Information	A10	A20	A40	A50	A70	C10 - C30	C20	E01
All engines	x 4, ELDOR, Housing Colour:Black, COIL ON PLUG, incl. spark plug connector						9.6326 C10		

2.0 TFSI quattro	Petrol	132	08/09-05/17	CDNB, CNCB

Engine	Information	A10	A20	A40	A50	A70	C10 - C30	C20	E01
Eng. CDNB	x 4, ELDOR, Housing Colour:Black, COIL ON PLUG, incl. spark plug connector						9.6326 C10		
Eng. CNCB	x 4, HITACHI, COIL ON PLUG, incl. spark plug connector						9.6536 C10		

2.0 TFSI quattro	Petrol	155	11/08-09/12	CAEB, CDNC, CPMA

Engine	Information	A10	A20	A40	A50	A70	C10 - C30	C20	E01
Eng. CAEB, CDNC	x 4, ELDOR, Housing Colour:Black, COIL ON PLUG, incl. spark plug connector						9.6326 C10		
Eng. CPMA	Qty: 4						9.6326 C10		

2.0 TFSI quattro	Petrol	162	05/13-05/17	CPMB

Engine	Information	A10	A20	A40	A50	A70	C10 - C30	C20	E01
All engines	x 4, ELDOR, Housing Colour:Black, COIL ON PLUG, incl. spark plug connector						9.6326 C10		

2.0 TFSI quattro	Petrol	165	06/12-05/16	CNCD

Engine	Information	A10	A20	A40	A50	A70	C10 - C30	C20	E01
All engines	->year 01/05/15, x 4, HITACHI, COIL ON PLUG, incl. spark plug connector						9.6536 C10		

2.0 TFSI quattro [CHN]	Petrol	155	09/09->	CADA

Engine	Information	A10	A20	A40	A50	A70	C10 - C30	C20	E01
All engines	Qty: 4						9.6326 C10		

A10	CONDENSER	A20	CONTACT SET	A40	DISTRIBUTOR CAP	A50	ROTOR	A70	PICK-UP
C10	COIL	C20	IGNITION MODULE	C30	ELECTRONIC IGNITION KIT	E01	IGNITION CABLE SET		

The present application list is a brief version. For the detailed information about the possibility of installation on a specific vehicle, please refer to our web-catalogue http://catalogo.facet.eu/

Vehicle	alim.	kW	Date	Engine	FUNCTIONS ON THE VEHICLE A10	A20	A40	A50	A70	C10 - C30	C20	E01
3.0 TFSI quattro	Petrol	200	06/12-05/17	**CTUC, CTVA**								
All engines	x 6, Colour:Red, COIL ON PLUG, incl. spark plug connector									9.6327 C10		
3.2 FSI quattro	Petrol	199	11/08-12/12	**CALB**								
All engines	x 6, Colour:Red, COIL ON PLUG, incl. spark plug connector									9.6327 C10		
SQ5 TFSI quattro	Petrol	260	05/13-05/17	**CTUD, CTXA**								
All engines	SQ5 Quattro, x 6, Colour:Red, COIL ON PLUG, incl. spark plug connector									9.6327 C10		
Q5 II												
2.0 TFSI quattro	Petrol	183	01/17-11/20	**DAXC**								
All engines	x 4, BERU, HITACHI, COIL ON PLUG, incl. spark plug connector									9.6536 C10		
2.0 TFSI quattro	Petrol	185	06/16->	**DAXB, DAYB**								
All engines	x 4, BERU, HITACHI, COIL ON PLUG, incl. spark plug connector									9.6536 C10		
35 TDI	Diesel	120	10/21->	**DTNA**								
All engines	x 4, HITACHI, COIL ON PLUG, incl. spark plug connector									9.6536 C10		
45 TFSI Mild Hybrid quattro	Petrol/ Electric	180	12/18->	**DNTA**								
All engines	x 4, HITACHI, COIL ON PLUG, incl. spark plug connector									9.6536 C10		
45 TFSI Mild Hybrid quattro	Petrol/ Electric	195	08/20->	**DPUA, DPVA**								
All engines	x 4, HITACHI, COIL ON PLUG, incl. spark plug connector									9.6536 C10		
45 TFSI quattro	Petrol/ Electric	195	11/20->	**DPVA**								
All engines	x 4, HITACHI, COIL ON PLUG, incl. spark plug connector									9.6536 C10		
50 TFSI e quattro	Petrol/ Electric	185	04/19-11/20	**DLGA**								
All engines	x 4, HITACHI, COIL ON PLUG, incl. spark plug connector									9.6536 C10		
50 TFSI e quattro	Petrol/ Electric	220	04/19->	**DLGA**								
All engines	x 4, HITACHI, COIL ON PLUG, incl. spark plug connector									9.6536 C10		
55 TFSI e quattro	Petrol/ Electric	185	08/19-11/20	**DLGA**								
All engines	x 4, HITACHI, COIL ON PLUG, incl. spark plug connector									9.6536 C10		
Q7 I												
3.0 TFSI quattro	Petrol	200	05/10-08/15	**CJTC, CJWC**								
All engines	x 6, Colour:Red, COIL ON PLUG, incl. spark plug connector									9.6327 C10		

A10	CONDENSER	**A20**	CONTACT SET	**A40**	DISTRIBUTOR CAP	**A50**	ROTOR	**A70**	PICK-UP
C10	COIL	**C20**	IGNITION MODULE	**C30**	ELECTRONIC IGNITION KIT	**E01**	IGNITION CABLE SET		

The present application list is a brief version. For the detailed information about the possibility of installation on a specific vehicle, please refer to our web-catalogue http://catalogo.facet.eu/

Vehicle	alim.	kW	Date	Engine	FUNCTIONS ON THE VEHICLE							
					A10	A20	A40	A50	A70	C10 - C30	C20	E01
3.0 TFSI quattro	Petrol	206	05/11-08/15	**CJWE, CTWB**						9.6327 C10		
3.0 TFSI quattro	Petrol	245	05/10-08/15	**CJTB, CJWB, CNAA, CTWA**						9.6327 C10		
4.2 FSI quattro	Petrol	257	03/06-05/10	**BAR**						9.6327 C10		
4.2 quattro	Petrol	231	03/06-12/10	**BAR**						9.6327 C10		
Q7 II												
2.0 TFSI	Petrol	185	08/15->	**CVJA**						9.6536 C10		
2.0 TFSI quattro	Petrol	185	08/15->	**CYRB**						9.6536 C10		
3.0 TFSI quattro	Petrol	245	01/15-12/19	**CREC**						9.6327 C10		
Q8												
45 TFSI	Petrol	180	07/20->	**DMFA, DNEA**						9.6536 C10		
45 TFSI quattro	Petrol	180	10/19->	**DMFA, DNEA**						9.6536 C10		
R8												
4.2 FSI quattro	Petrol	309	04/07-09/10	**BYH**						9.6327 C10		
4.2 FSI quattro	Petrol	316	07/10-07/15	**CNDA**						9.6327 C10		
5.2 FSI	Petrol	397	09/17->	**DKAB**						9.6327 C10		
5.2 FSI	Petrol	404	07/12-07/15	**CTPA**						9.6327 C10		
5.2 FSI	Petrol	419	07/12->	**CTPB, DKAC**						9.6327 C10		

Engine	Information
All engines	x 6, Colour:Red, COIL ON PLUG, incl. spark plug connector
All engines	x 8, Colour:Red, COIL ON PLUG, incl. spark plug connector
All engines	Qty: 4
All engines	x 4, HITACHI, COIL ON PLUG, incl. spark plug connector
All engines	x 10, Colour:Red, COIL ON PLUG
All engines	x 10, Colour:Red, COIL ON PLUG, incl. spark plug connector

A10	CONDENSER	**A20**	CONTACT SET	**A40**	DISTRIBUTOR CAP	**A50**	ROTOR	**A70**	PICK-UP
C10	COIL	**C20**	IGNITION MODULE	**C30**	ELECTRONIC IGNITION KIT	**E01**	IGNITION CABLE SET		

The present application list is a brief version. For the detailed information about the possibility of installation on a specific vehicle, please refer to our web-catalogue http://catalogo.facet.eu/

Vehicle	alim.	kW	Date	Engine	FUNCTIONS ON THE VEHICLE							
					A10	A20	A40	A50	A70	C10 - C30	C20	E01
5.2 FSI quattro	Petrol	386	04/09-07/15	**ENGINE** BUJ, CTYA								

Engine	Information	A10	A20	A40	A50	A70	C10 - C30		C20	E01
All engines	x 10, Colour:Red, COIL ON PLUG, incl. spark plug connector						9.6327	C10		

5.2 FSI quattro	Petrol	397	07/15->	**ENGINE** CSPB

Engine	Information	A10	A20	A40	A50	A70	C10 - C30		C20	E01
All engines	x 10, Colour:Red, COIL ON PLUG						9.6327	C10		

5.2 FSI quattro	Petrol	404	05/12-07/15	**ENGINE** CTPA

Engine	Information	A10	A20	A40	A50	A70	C10 - C30		C20	E01
All engines	x 10, Colour:Red, COIL ON PLUG, incl. spark plug connector						9.6327	C10		

5.2 FSI quattro	Petrol	412	11/10-07/15	**ENGINE** CMPA

Engine	Information	A10	A20	A40	A50	A70	C10 - C30		C20	E01
All engines	x 10, ELDOR, Housing Colour:Black, COIL ON PLUG, incl. spark plug connector						9.6326	C10		

5.2 FSI quattro	Petrol	419	07/14->	**ENGINE** CTPB, DKAC

Engine	Information	A10	A20	A40	A50	A70	C10 - C30		C20	E01
All engines	x 10, Colour:Red, COIL ON PLUG, incl. spark plug connector						9.6327	C10		

5.2 FSI quattro	Petrol	449	07/15->	**ENGINE** CSPA, DKAA

Engine	Information	A10	A20	A40	A50	A70	C10 - C30		C20	E01
All engines	x 10, Colour:Red, COIL ON PLUG						9.6327	C10		

5.2 FSI quattro	Petrol	456	09/18->	**ENGINE** DMWA

Engine	Information	A10	A20	A40	A50	A70	C10 - C30		C20	E01
All engines	x 10, Colour:Red, COIL ON PLUG						9.6327	C10		

TT I

1.8 T	Petrol	110	01/01-06/06	**ENGINE** AUM

Engine	Information	A10	A20	A40	A50	A70	C10 - C30		C20	E01
All engines	x 4, COIL ON PLUG, incl. spark plug connector						9.6329	C10		

1.8 T	Petrol	120	09/05-06/06	**ENGINE** BVP

Engine	Information	A10	A20	A40	A50	A70	C10 - C30		C20	E01
All engines	x 4, COIL ON PLUG, incl. spark plug connector						9.6329	C10		

1.8 T	Petrol	132	10/98-06/06	**ENGINE** AJQ, APP, ATC, AUQ

Engine	Information	A10	A20	A40	A50	A70	C10 - C30		C20	E01
All engines	01/08/00 ->, ch. 8N1010001 ->, x 4, COIL ON PLUG, incl. spark plug connector						9.6329	C10		
All engines	->year 01/07/00, ->ch. 8N1010000, x 4, COIL ON PLUG, incl. spark plug connector						9.6345	C10		

1.8 T	Petrol	140	09/05-06/06	**ENGINE** BVR

Engine	Information	A10	A20	A40	A50	A70	C10 - C30		C20	E01
All engines	x 4, COIL ON PLUG, incl. spark plug connector						9.6329	C10		

1.8 T quattro	Petrol	132	10/98-06/06	**ENGINE** AJQ, ARY, ATC, AUQ

Engine	Information	A10	A20	A40	A50	A70	C10 - C30		C20	E01
All engines	01/08/00 ->, ch. 8N1010001 ->, x 4, COIL ON PLUG, incl. spark plug connector						9.6329	C10		
All engines	->year 01/07/00, ->ch. 8N1010000, x 4, COIL ON PLUG, incl. spark plug connector						9.6345	C10		

1.8 T quattro	Petrol	140	09/05-06/06	**ENGINE** BVR

Engine	Information	A10	A20	A40	A50	A70	C10 - C30		C20	E01
All engines	x 4, COIL ON PLUG, incl. spark plug connector						9.6329	C10		

A10	CONDENSER	**A20**	CONTACT SET	**A40**	DISTRIBUTOR CAP	**A50**	ROTOR	**A70**	PICK-UP
C10	COIL	**C20**	IGNITION MODULE	**C30**	ELECTRONIC IGNITION KIT	**E01**	IGNITION CABLE SET		

The present application list is a brief version. For the detailed information about the possibility of installation on a specific vehicle, please refer to our web-catalogue http://catalogo.facet.eu/

Vehicle	alim.	kW	Date	Engine	FUNCTIONS ON THE VEHICLE: A10	A20	A40	A50	A70	C10 - C30	C20	E01
1.8 T quattro	Petrol	165	10/98-06/06	**APX, BAM**								
All engines	01/08/00 ->, x 4, COIL ON PLUG, incl. spark plug connector									9.6329 C10		
All engines	->year 01/07/00, x 4, COIL ON PLUG, incl. spark plug connector									9.6345 C10		
1.8 T quattro	Petrol	180	03/05-06/06	**BFV**								
All engines	x 4, COIL ON PLUG, incl. spark plug connector									9.6329 C10		
3.2 VR6 quattro	Petrol	184	07/03-06/06	**BHE, BPF**								
All engines	x 6, COIL ON PLUG									9.6334 C10		
TT II												
1.8 TFSI	Petrol	118	06/08-06/14	**CDAA**								
All engines	x 4, ELDOR, Housing Colour:Black, COIL ON PLUG, incl. spark plug connector									9.6326 C10		
2.0 TFSI	Petrol	147	08/06-06/10	**BPY, BWA, CCTA**								
Eng. BPY, CCTA	Qty: 4									9.6326 C10		
Eng. BWA	x 4, ELDOR, Housing Colour:Black, COIL ON PLUG, incl. spark plug connector									9.6326 C10		
2.0 TFSI	Petrol	155	05/10-06/14	**CESA**								
All engines	x 4, ELDOR, Housing Colour:Black, COIL ON PLUG, incl. spark plug connector									9.6326 C10		
2.0 TFSI quattro	Petrol	147	06/08-06/10	**BWA, CCZA**								
Eng. BWA	Qty: 4									9.6326 C10		
Eng. CCZA	x 4, ELDOR, Housing Colour:Black, COIL ON PLUG, incl. spark plug connector									9.6326 C10		
2.0 TFSI quattro	Petrol	155	05/10-06/14	**CESA, CETA**								
All engines	x 4, ELDOR, Housing Colour:Black, COIL ON PLUG, incl. spark plug connector									9.6326 C10		
2.0 TTS quattro	Petrol	195	05/08-06/14	**CDLA, CDMA**								
All engines	TTS Quattro, x 4, ELDOR, Housing Colour:Black, COIL ON PLUG, incl. spark plug connector									9.6326 C10		
2.0 TTS quattro	Petrol	200	05/08-06/14	**CDLB**								
All engines	TTS Quattro, x 4, ELDOR, Housing Colour:Black, COIL ON PLUG, incl. spark plug connector									9.6326 C10		
2.5 RS quattro	Petrol	250	07/09-06/14	**CEPA**								
All engines	TTRS Quattro, x 5, ELDOR, Housing Colour:Black, COIL ON PLUG, incl. spark plug connector									9.6326 C10		
2.5 RS quattro	Petrol	265	05/11-06/14	**CEPB**								
All engines	TTRS Quattro, x 5, ELDOR, Housing Colour:Black, COIL ON PLUG, incl. spark plug connector									9.6326 C10		
3.2 V6 quattro	Petrol	184	08/06-06/10	**BUB**								
All engines	x 6, COIL ON PLUG									9.6334 C10		

A10	CONDENSER	**A20**	CONTACT SET	**A40**	DISTRIBUTOR CAP	**A50**	ROTOR	**A70**	PICK-UP
C10	COIL	**C20**	IGNITION MODULE	**C30**	ELECTRONIC IGNITION KIT	**E01**	IGNITION CABLE SET		

The present application list is a brief version. For the detailed information about the possibility of installation on a specific vehicle, please refer to our web-catalogue http://catalogo.facet.eu/

Vehicle	alim.	kW	Date	Engine	FUNCTIONS ON THE VEHICLE							
					A10	A20	A40	A50	A70	C10 - C30	C20	E01

TT III

				ENGINE
1.8 TFSI	Petrol	**132**	07/15-08/18	**CJSA, CJSB**

Engine	Information	A10	A20	A40	A50	A70	C10 - C30		C20	E01
All engines	x 4, HITACHI, COIL ON PLUG, incl. spark plug connector						9.6536	C10		

				ENGINE
2.0 TTS quattro	Petrol	**210**	02/15->	**CJXF**

Engine	Information	A10	A20	A40	A50	A70	C10 - C30		C20	E01
All engines	TTS Quattro, x 4, HITACHI, COIL ON PLUG, incl. spark plug connector						9.6536	C10		

				ENGINE
2.0 TTS quattro	Petrol	**215**	07/15->	**CYFB**

Engine	Information	A10	A20	A40	A50	A70	C10 - C30		C20	E01
All engines	TTS Quattro, x 4, HITACHI, COIL ON PLUG, incl. spark plug connector						9.6536	C10		

				ENGINE
2.0 TTS quattro	Petrol	**225**	08/18->	**DNUF**

Engine	Information	A10	A20	A40	A50	A70	C10 - C30		C20	E01
All engines	x 4, HITACHI, COIL ON PLUG, incl. spark plug connector						9.6536	C10		

				ENGINE
2.0 TTS quattro	Petrol	**228**	11/14->	**CJXG**

Engine	Information	A10	A20	A40	A50	A70	C10 - C30		C20	E01
All engines	TTS Quattro, x 4, HITACHI, COIL ON PLUG, incl. spark plug connector						9.6536	C10		

				ENGINE
40 TFSI	Petrol	**145**	07/18->	**DKZB, DNNB**

Engine	Information	A10	A20	A40	A50	A70	C10 - C30		C20	E01
All engines	01/11/18 ->, x 4, HITACHI, COIL ON PLUG, incl. spark plug connector						9.6536	C10		

V8

				ENGINE
3.6 quattro	Petrol	**180**	04/93-02/94	**PT**

Engine	Information	A10	A20	A40	A50	A70	C10 - C30		C20	E01
All engines	Qty: 2			2.7530/18PHT						

				ENGINE
3.6 quattro	Petrol	**184**	10/88-02/94	**PT**

Engine	Information	A10	A20	A40	A50	A70	C10 - C30		C20	E01
All engines	Qty: 2			2.7530/18PHT						

				ENGINE
4.2 quattro	Petrol	**206**	10/91-02/94	**ABH**

Engine	Information	A10	A20	A40	A50	A70	C10 - C30		C20	E01
All engines	Qty: 2			2.7530/18PHT						

A10	CONDENSER	**A20**	CONTACT SET	**A40**	DISTRIBUTOR CAP	**A50**	ROTOR	**A70**	PICK-UP
C10	COIL	**C20**	IGNITION MODULE	**C30**	ELECTRONIC IGNITION KIT	**E01**	IGNITION CABLE SET		

The present application list is a brief version. For the detailed information about the possibility of installation on a specific vehicle, please refer to our web-catalogue http://catalogo.facet.eu/

Vehicle	alim.	kW	Date	Engine	FUNCTIONS ON THE VEHICLE							
					A10	A20	A40	A50	A70	C10 - C30	C20	E01
1000-SERIES												
				ENGINE								
1100	Petrol	32	01/70-12/74	--								
Engine	Information				A10	A20	A40	A50	A70	C10 - C30	C20	E01
All engines						1.4683MHDV	2.8075	3.8106				
				ENGINE								
1300	Petrol	39	01/70-12/74	--								
Engine	Information				A10	A20	A40	A50	A70	C10 - C30	C20	E01
All engines						1.4683MHDV	2.8075	3.8106				
				ENGINE								
1300 GT	Petrol	50	01/70-12/74	--								
Engine	Information				A10	A20	A40	A50	A70	C10 - C30	C20	E01
All engines						1.4683MHDV	2.8075	3.8106				
ALLEGRO												
				ENGINE								
1.1	Petrol	33	05/73-10/81	10 H								
Engine	Information				A10	A20	A40	A50	A70	C10 - C30	C20	E01
All engines							2.8075	3.8106				
				ENGINE								
1.3	Petrol	40	05/73-03/82	12 H								
Engine	Information				A10	A20	A40	A50	A70	C10 - C30	C20	E01
All engines						1.4683MHDV	2.8075	3.8106				
				ENGINE								
1.5 Super	Petrol	50	05/73-03/82	14 H								
Engine	Information				A10	A20	A40	A50	A70	C10 - C30	C20	E01
All engines						1.4683MHDV	2.8075	3.8106				
APACHE												
				ENGINE								
1300	Petrol	44	11/71-10/74	--								
Engine	Information				A10	A20	A40	A50	A70	C10 - C30	C20	E01
All engines							2.8075	3.8106				
				ENGINE								
1300 TC	Petrol	52	11/71-10/74	--								
Engine	Information				A10	A20	A40	A50	A70	C10 - C30	C20	E01
All engines							2.8075	3.8106				
MAXI												
				ENGINE								
1500	Petrol	50	04/69-07/80	--, 14 H								
Engine	Information				A10	A20	A40	A50	A70	C10 - C30	C20	E01
All engines						1.4683MHDV	2.8075	3.8106				
				ENGINE								
1750	Petrol	53	04/69-10/80	17 H								
Engine	Information				A10	A20	A40	A50	A70	C10 - C30	C20	E01
All engines						1.4683MHDV	2.8075	3.8106				
				ENGINE								
1750 HL	Petrol	66	10/72-10/80	--, 17 LA								
Engine	Information				A10	A20	A40	A50	A70	C10 - C30	C20	E01
All engines						1.4683MHDV	2.8075	3.8106				
MINI												
				ENGINE								
1.3	Petrol	53	09/69-09/80	12 HC								
Engine	Information				A10	A20	A40	A50	A70	C10 - C30	C20	E01
All engines							2.8075	3.8106				
				ENGINE								
1000	Petrol	26	10/67-09/84	--								
Engine	Information				A10	A20	A40	A50	A70	C10 - C30	C20	E01
All engines							2.8075	3.8106				
				ENGINE								
1000	Petrol	28	01/69-08/81	--, 99 H								
Engine	Information				A10	A20	A40	A50	A70	C10 - C30	C20	E01
All engines							2.8075	3.8106				

A10	CONDENSER	**A20**	CONTACT SET	**A40**	DISTRIBUTOR CAP	**A50**	ROTOR	**A70**	PICK-UP
C10	COIL	**C20**	IGNITION MODULE	**C30**	ELECTRONIC IGNITION KIT	**E01**	IGNITION CABLE SET		

The present application list is a brief version. For the detailed information about the possibility of installation on a specific vehicle, please refer to our web-catalogue http://catalogo.facet.eu/

Vehicle	alim.	kW	Date	Engine	FUNCTIONS ON THE VEHICLE A10	A20	A40	A50	A70	C10 - C30	C20	E01
1000	Petrol	29	10/67-09/84	99 H								
Engine: All engines	Information:					1.4683MHDV	2.8075	3.8106				
1275 GT	Petrol	39	10/69-08/80	12 H								
Engine: All engines	Information:					1.4683MHDV	2.8075	3.8106				
850	Petrol	25	01/60-12/69	--								
Engine: All engines	Information:							3.8106				
MINI I												
1.0	Petrol	44	09/62-08/69	--								
Engine: All engines	Information:							3.8106				
1.1	Petrol	46	11/62-08/64	--								
Engine: All engines	Information:							3.8106				
1.3	Petrol	57	09/62-08/69	--								
Engine: All engines	Information:							3.8106				
850	Petrol	25	06/59-08/69	781Y								
Engine: All engines	Information:						2.8075	3.8106				
Cooper	Petrol	41	01/61-12/67	99 H								
Engine: All engines	Information:							3.8106				
Cooper S	Petrol	57	09/62-12/71	--								
Engine: All engines	Information:						2.8075	3.8106				
MONTEGO												
1.3	Petrol	50	10/84-08/88	--, 12 HL								
Engine: All engines	Information: version Lucas						2.8094PHT	3.8125				
1.6 LS	Petrol	61	10/84-08/88	16 HC37								
Engine: All engines	Information: version Lucas						2.8093PHT	3.8124RS				
1.6 LS, HL	Petrol	61	04/84-08/88	16 HC37								
Engine: All engines	Information: version Lucas						2.8093PHT	3.8124RS				
2.0	Petrol	74	04/84-08/88	20 HSC								
Engine: All engines	Information: version Lucas						2.8093PHT	3.8124RS				
2.0 Turbo	Petrol	110	04/84-08/88	20 HC85								
Engine: All engines	Information: version Lucas						2.8093PHT	3.8124RS				

A10	CONDENSER	A20	CONTACT SET	A40	DISTRIBUTOR CAP	A50	ROTOR	A70	PICK-UP
C10	COIL	C20	IGNITION MODULE	C30	ELECTRONIC IGNITION KIT	E01	IGNITION CABLE SET		

The present application list is a brief version. For the detailed information about the possibility of installation on a specific vehicle, please refer to our web-catalogue http://catalogo.facet.eu/

Vehicle	alim.	kW	Date	Engine	FUNCTIONS ON THE VEHICLE							
					A10	A20	A40	A50	A70	C10 - C30	C20	E01
3000												
				ENGINE								
3.0 Sport	Petrol	110	03/64-10/68	--								
Engine	Information				A10	A20	A40	A50	A70	C10 - C30	C20	E01
All engines								3.8107				
SPRITE												
				ENGINE								
1.3	Petrol	48	03/66-10/71	--, 12CC								
Engine	Information				A10	A20	A40	A50	A70	C10 - C30	C20	E01
All engines								3.8106				
SPRITE MK.III												
				ENGINE								
1.1	Petrol	41	03/64-09/66	--								
Engine	Information				A10	A20	A40	A50	A70	C10 - C30	C20	E01
All engines								3.8106				

A10	CONDENSER	**A20**	CONTACT SET	**A40**	DISTRIBUTOR CAP	**A50**	ROTOR	**A70**	PICK-UP
C10	COIL	**C20**	IGNITION MODULE	**C30**	ELECTRONIC IGNITION KIT	**E01**	IGNITION CABLE SET		

The present application list is a brief version. For the detailed information about the possibility of installation on a specific vehicle, please refer to our web-catalogue http://catalogo.facet.eu/

Vehicle	alim.	kW	Date	Engine	FUNCTIONS ON THE VEHICLE							
					A10	A20	A40	A50	A70	C10 - C30	C20	E01

CHEVANNE

				ENGINE
1.3	Petrol	39	06/76-02/80	13D

Engine	Information	A10	A20	A40	A50	A70	C10 - C30	C20	E01
All engines					3.7590				

				ENGINE
1.3	Petrol	40	03/80-12/82	LW4

Engine	Information	A10	A20	A40	A50	A70	C10 - C30	C20	E01
All engines					3.7590				

A10	CONDENSER	A20	CONTACT SET	A40	DISTRIBUTOR CAP	A50	ROTOR	A70	PICK-UP
C10	COIL	C20	IGNITION MODULE	C30	ELECTRONIC IGNITION KIT	E01	IGNITION CABLE SET		

The present application list is a brief version. For the detailed information about the possibility of installation on a specific vehicle, please refer to our web-catalogue http://catalogo.facet.eu/

Vehicle	alim.	kW	Date	Engine	FUNCTIONS ON THE VEHICLE							
					A10	A20	A40	A50	A70	C10 - C30	C20	E01

BENTAYGA

				ENGINE
3.0 Hybrid	Petrol/ Electric	250	08/18->	**DCBE**

Engine	Information	A10	A20	A40	A50	A70	C10 - C30		C20	E01
All engines	x 6, ELDOR, COIL ON PLUG						9.6536	C10		

				ENGINE
4.0	Petrol	404	01/18->	**DCUA**

Engine	Information	A10	A20	A40	A50	A70	C10 - C30		C20	E01
All engines	x 8, COIL ON PLUG						9.6536	C10		

A10	CONDENSER	**A20**	CONTACT SET	**A40**	DISTRIBUTOR CAP	**A50**	ROTOR	**A70**	PICK-UP
C10	COIL	**C20**	IGNITION MODULE	**C30**	ELECTRONIC IGNITION KIT	**E01**	IGNITION CABLE SET		

The present application list is a brief version. For the detailed information about the possibility of installation on a specific vehicle, please refer to our web-catalogue http://catalogo.facet.eu/

Vehicle	alim.	kW	Date	Engine	FUNCTIONS ON THE VEHICLE: A10	A20	A40	A50	A70	C10 - C30	C20	E01
1 I												
116 i	Petrol	85	06/04-12/11	ENGINE: N43 B16 A, N45 B16 A								
Engine: Eng. N45 B16 A	Information: x 4, DELPHI, ELDOR, COIL ON PLUG									9.6375 C10		
Engine: Eng. N43 B16 A	Information: Qty: 4									9.6507 C10		
116 i	Petrol	90	03/07-12/11	ENGINE: N43 B16 AA, N43 B20 A								
Engine: All engines	Information: x 4, BOSCH, COIL ON PLUG									9.6507 C10		
118 d	Diesel	90	06/04-02/07	ENGINE: M47 D20 (204D4)								
Engine: All engines	Information: Qty: 4									9.6507 C10		
118 i	Petrol	100	09/06-12/13	ENGINE: N46 B20 B								
Engine: All engines	Information: x 4, DELPHI, ELDOR, COIL ON PLUG									9.6375 C10		
118 i	Petrol	105	09/06-12/13	ENGINE: N43 B20 A								
Engine: All engines	Information: x 4, BOSCH, COIL ON PLUG									9.6507 C10		
118 i	Petrol	125	03/07-12/07	ENGINE: N43 B20 A								
Engine: All engines	Information: x 4, BOSCH, COIL ON PLUG									9.6507 C10		
118 i	Petrol	95	07/04-02/08	ENGINE: N46 B20 B								
Engine: All engines	Information: x 4, DELPHI, COIL ON PLUG									9.6375 C10		
120 i	Petrol	110	06/04-02/07	ENGINE: N46 B20 B, N46 B20 BD, N46 B20 C								
Engine: All engines	Information: x 4, DELPHI, COIL ON PLUG									9.6375 C10		
120 i	Petrol	115	03/07-12/13	ENGINE: N46 B20 B, N46 B20 BD, N46 B20 C								
Engine: Eng. N46 B20 B, N46 B20 C	Information: x 4, DELPHI, COIL ON PLUG									9.6375 C10		
Engine: Eng. N46 B20 BD	Information: Qty: 4									9.6507 C10		
120 i	Petrol	120	03/07-12/13	ENGINE: N43 B20 A, N46 B20 C								
Engine: Eng. N46 B20 C	Information: Qty: 4									9.6375 C10		
Engine: Eng. N43 B20 A	Information: x 4, BOSCH, COIL ON PLUG									9.6507 C10		
120 i	Petrol	125	03/07-10/13	ENGINE: N43 B20 A								
Engine: All engines	Information: x 4, BOSCH, COIL ON PLUG									9.6507 C10		
125 i	Petrol	160	10/07->	ENGINE: N52 B30 A, N52 B30 B, N52 B30 BF								
Engine: All engines	Information: x 6, DELPHI, COIL ON PLUG									9.6375 C10		
Engine: Eng. N52 B30 B, N52 B30 BF	Information: Qty: 6									9.6375 C10		
128 i	Petrol	172	12/07->	ENGINE: N51 B30 A, N52 B30 A								
Engine: All engines	Information: Qty: 6									9.6375 C10		

A10	CONDENSER	**A20**	CONTACT SET	**A40**	DISTRIBUTOR CAP	**A50**	ROTOR	**A70**	PICK-UP
C10	COIL	**C20**	IGNITION MODULE	**C30**	ELECTRONIC IGNITION KIT	**E01**	IGNITION CABLE SET		

The present application list is a brief version. For the detailed information about the possibility of installation on a specific vehicle, please refer to our web-catalogue http://catalogo.facet.eu/

Vehicle	alim.	kW	Date	Engine	FUNCTIONS ON THE VEHICLE							
					A10	A20	A40	A50	A70	C10 - C30	C20	E01
130 i	Petrol	190	09/06-12/11	N52 B30 A, N52 B30 B, N52 B30 BF								
All engines				x 6, DELPHI, COIL ON PLUG						9.6375 C10		
130 i	Petrol	195	09/05-12/11	N52 B30 A, N52 B30 B, N52 B30 BF								
All engines				x 6, DELPHI, COIL ON PLUG						9.6375 C10		
135 i	Petrol	225	10/07-10/13	N54 B30 A, N55 B30 A								
All engines				x 6, DELPHI, ELDOR, COIL ON PLUG						9.6375 C10		
135 i	Petrol	240	10/07-12/13	N54 B30 A, N55 B30 A								
Eng. N54 B30 A				Qty: 6						9.6375 C10		
Eng. N55 B30 A				x 6, DELPHI, COIL ON PLUG						9.6375 C10		
M	Petrol	250	03/11-06/12	N54 B30 A								
All engines				x 6, DELPHI, ELDOR, COIL ON PLUG						9.6375 C10		
1 II												
114 i	Petrol	75	12/11->	N13 B16 A								
All engines				x 4, DELPHI, COIL ON PLUG						9.6375 C10		
116 i	Petrol	100	07/11->	N13 B16 A								
All engines				x 4, DELPHI, COIL ON PLUG						9.6375 C10		
116 i	Petrol	80	03/15->	B38 B15 A								
All engines				x 3, COIL ON PLUG						9.6532 C10		
118 i	Petrol	100	03/15->	B38 B15 A, N13 B16 A								
Eng. N13 B16 A				x 4, DELPHI, COIL ON PLUG						9.6375 C10		
Eng. B38 B15 A				x 3, COIL ON PLUG						9.6532 C10		
118 i	Petrol	125	07/11->	N13 B16 A								
All engines				x 4, DELPHI, COIL ON PLUG						9.6375 C10		
120 i	Petrol	130	03/15->	N13 B16 A								
All engines				x 4, DELPHI, COIL ON PLUG						9.6375 C10		
120 i	Petrol	135	07/16->	B48 B20 A								
All engines				x 4, COIL ON PLUG						9.6532 C10		
125 i	Petrol	160	12/11-12/19	N20 B20 A								
All engines				x 4, DELPHI, COIL ON PLUG						9.6375 C10		
125 i	Petrol	165	10/15->	B48 B20 B								
All engines				x 4, COIL ON PLUG						9.6532 C10		

A10	CONDENSER	A20	CONTACT SET	A40	DISTRIBUTOR CAP	A50	ROTOR	A70	PICK-UP
C10	COIL	C20	IGNITION MODULE	C30	ELECTRONIC IGNITION KIT	E01	IGNITION CABLE SET		

The present application list is a brief version. For the detailed information about the possibility of installation on a specific vehicle, please refer to our web-catalogue http://catalogo.facet.eu/

Vehicle	alim.	kW	Date	Engine	FUNCTIONS ON THE VEHICLE							
					A10	A20	A40	A50	A70	C10 - C30	C20	E01
125 i	Petrol	175	03/12->	N20 B20 A						9.6375 C10		
125 i Active Flex	Petrol/ Ethanol	160	11/14-11/17	N20 B20 A						9.6375 C10		
M 135 i	Petrol	235	12/11->	N55 B30 A						9.6375 C10		
M 135 i	Petrol	240	03/15->	N55 B30 A						9.6375 C10		
M 135 i xDrive	Petrol	235	02/12->	N55 B30 A						9.6375 C10		
M 135 i xDrive	Petrol	240	03/15->	N55 B30 A						9.6375 C10		
M 140 i	Petrol	250	10/15->	B58 B30 A						9.6532 C10		
M 140 i xDrive	Petrol	250	09/15->	B58 B30 A						9.6532 C10		
1 III												
116 i	Petrol	80	11/20->	B38 A15 A						9.6532 C10		
118 i	Petrol	100	11/20->	B38 A15 A						9.6532 C10		
118 i	Petrol	103	07/19->	B38 A15 A						9.6532 C10		
120 i	Petrol	131	11/20->	B48 A20 A, B48 A20 F						9.6532 C10		
128 ti	Petrol	180	11/20->	B48 A20 B						9.6532 C10		
128 ti	Petrol	195	11/20->	B48 A20 E						9.6532 C10		

Engine	Information
All engines	x 4, DELPHI, COIL ON PLUG
All engines	x 6, DELPHI, COIL ON PLUG
All engines	x 6, COIL ON PLUG
All engines	x 3, COIL ON PLUG
All engines	x 4, COIL ON PLUG

A10	CONDENSER	A20	CONTACT SET	A40	DISTRIBUTOR CAP	A50	ROTOR	A70	PICK-UP
C10	COIL	C20	IGNITION MODULE	C30	ELECTRONIC IGNITION KIT	E01	IGNITION CABLE SET		

The present application list is a brief version. For the detailed information about the possibility of installation on a specific vehicle, please refer to our web-catalogue http://catalogo.facet.eu/

Vehicle	alim.	kW	Date	Engine	FUNCTIONS ON THE VEHICLE							
					A10	A20	A40	A50	A70	C10 - C30	C20	E01
M 135 i xDrive	Petrol	225	07/19->	**B48 A20 E**								
Engine: All engines — Information: x 4, COIL ON PLUG										9.6532 C10		
1500-2000												
1600	Petrol	61	04/64-04/68	**M10 B16 (16A)**								
Engine: All engines						1.2529HDV						
1800	Petrol	66	08/63-09/69	**M118**								
Engine: All engines						1.2529HDV						
1800 Ti	Petrol	81	10/63-04/68	**M118**								
Engine: All engines						1.2529HDV						
1800 Ti	Petrol	96	10/63-04/68	**M118**								
Engine: All engines						1.2529HDV						
2000	Petrol	74	09/68-07/72	**18F209**								
Engine: All engines								3.7518RS				
2000 Ti / Tilux	Petrol	88	01/66-07/72	**18F209**								
Engine: All engines						1.2529HDV						
1502-2002												
1600 Ti	Petrol	77	09/67-11/69	**M10 B16 (16A)**								
Engine: All engines						1.2529HDV						
1602	Petrol	63	04/71-07/75	**M10 B16 A**								
Engine: All engines							2.7462					
2002	Petrol	74	02/68-07/75	**18F209, M10 B20 A**								
Engine: All engines						1.2529HDV						
Engine: Eng. M10 B20 A								3.7518RS				
2002 Ti	Petrol	88	06/68-04/72	**18F209**								
Engine: All engines						1.2529HDV						
2002 Tii	Petrol	96	01/71-07/75	**18F209, M10 B20 (23EA)**								
Engine: All engines						1.2529HDV						
1600 GT												
1.6	Petrol	77	10/67-05/69	**M10 B16 (16A)**								
Engine: All engines						1.2529HDV						
2												
216 i	Petrol	75	09/14-02/18	**B38 A15 A**								
Engine: All engines — Information: x 3, COIL ON PLUG										9.6532 C10		

A10	CONDENSER	**A20**	CONTACT SET	**A40**	DISTRIBUTOR CAP	**A50**	ROTOR	**A70**	PICK-UP
C10	COIL	**C20**	IGNITION MODULE	**C30**	ELECTRONIC IGNITION KIT	**E01**	IGNITION CABLE SET		

The present application list is a brief version. For the detailed information about the possibility of installation on a specific vehicle, please refer to our web-catalogue http://catalogo.facet.eu/

Vehicle	alim.	kW	Date	Engine	FUNCTIONS ON THE VEHICLE A10	A20	A40	A50	A70	C10 - C30	C20	E01
216 i	Petrol	80	03/18->	B38 A15 A								
Engine: All engines	Information: x 3, COIL ON PLUG									9.6532 C10		
218 i	Petrol	100	07/14->	B38 A15 A, B38 B15 A								
Engine: All engines	Information: x 3, COIL ON PLUG									9.6532 C10		
218 i	Petrol	103	04/17->	B38 A15 A								
Engine: All engines	Information: x 3, COIL ON PLUG									9.6532 C10		
220 i	Petrol	120	03/14->	B48 A20 A								
Engine: All engines	Information: x 4, COIL ON PLUG									9.6532 C10		
220 i	Petrol	131	11/20->	B48 A20 A, B48 A20 F								
Engine: All engines	Information: x 4, COIL ON PLUG									9.6532 C10		
220 i	Petrol	135	10/13->	B48 B20 A, N20 B20 A, N20 B20 B								
Engine: Eng. N20 B20 A, N20 B20 B	Information: x 4, DELPHI, COIL ON PLUG									9.6375 C10		
Engine: Eng. B48 B20 A	Information: x 4, COIL ON PLUG									9.6532 C10		
220 i	Petrol	141	03/14->	B48 A20 A, B48 A20 F								
Engine: All engines	Information: x 4, COIL ON PLUG									9.6532 C10		
220 i xDrive	Petrol	131	03/21->	B48 A20 A								
Engine: All engines	Information: x 4, COIL ON PLUG									9.6532 C10		
225 i	Petrol	170	11/13->	B48 A20 B								
Engine: All engines	Information: x 4, COIL ON PLUG									9.6532 C10		
225 i xDrive	Petrol	170	03/14->	B48 A20 B								
Engine: All engines	Information: x 4, COIL ON PLUG									9.6532 C10		
225 xe Plug-in-Hybrid	Petrol/ Electric	100	11/14->	B38 A15 A								
Engine: All engines	Information: x 3, COIL ON PLUG									9.6532 C10		
225 xe Plug-in-Hybrid	Petrol/ Electric	162	11/20->	B38 A15 A								
Engine: All engines	Information: x 3, COIL ON PLUG									9.6532 C10		
225 xe Plug-in-Hybrid	Petrol/ Electric	165	11/14->	B38 A15 A								
Engine: All engines	Information: x 3, COIL ON PLUG									9.6532 C10		
225 xe Plug-in-Hybrid	Petrol/ Electric	92	11/20->	B38 A15 A								
Engine: All engines	Information: x 3, COIL ON PLUG									9.6532 C10		

A10	CONDENSER	A20	CONTACT SET	A40	DISTRIBUTOR CAP	A50	ROTOR	A70	PICK-UP
C10	COIL	C20	IGNITION MODULE	C30	ELECTRONIC IGNITION KIT	E01	IGNITION CABLE SET		

The present application list is a brief version. For the detailed information about the possibility of installation on a specific vehicle, please refer to our web-catalogue http://catalogo.facet.eu/

Vehicle	alim.	kW	Date	Engine	FUNCTIONS ON THE VEHICLE							
					A10	A20	A40	A50	A70	C10 - C30	C20	E01
228 i	Petrol	180	07/14->	ENGINE N20 B20 A								
Engine: All engines	Information: x 4, DELPHI, COIL ON PLUG									9.6375 C10		
230 i	Petrol	185	07/16->	ENGINE B48 B20 B								
Engine: All engines	Information: x 4, COIL ON PLUG									9.6532 C10		
M 235 i	Petrol	240	10/13->	ENGINE N55 B30 A								
Engine: All engines	Information: x 6, DELPHI, COIL ON PLUG									9.6375 C10		
M 235 i xDrive	Petrol	225	11/19->	ENGINE B48 A20 E								
Engine: All engines	Information: x 4, COIL ON PLUG									9.6532 C10		
M 235 i xDrive	Petrol	240	07/14->	ENGINE N55 B30 A								
Engine: All engines	Information: x 6, DELPHI, COIL ON PLUG									9.6375 C10		
M 240 i	Petrol	250	09/15->	ENGINE B58 B30 A								
Engine: All engines	Information: x 6, COIL ON PLUG									9.6532 C10		
M 240 i xDrive	Petrol	250	09/15->	ENGINE B58 B30 A								
Engine: All engines	Information: x 6, COIL ON PLUG									9.6532 C10		
M2	Petrol	272	11/15-06/18	ENGINE N55 B30 A								
Engine: All engines	Information: x 6, DELPHI, COIL ON PLUG									9.6375 C10		
M2 Competition	Petrol	302	06/18->	ENGINE S55 B30 A								
Engine: All engines	Information: x 6, DELPHI, COIL ON PLUG									9.6375 C10		
M2 CS	Petrol	331	11/19->	ENGINE S55 B30 A								
Engine: All engines	Information: x 6, DELPHI, COIL ON PLUG									9.6375 C10		
2000												
CS	Petrol	88	10/65-06/70	ENGINE 18F209								
Engine: All engines	Information:					1.2529HDV						
2500-3.3												
3.0 S	Petrol	132	05/71-04/77	ENGINE M30 B30								
Engine: All engines	Information:					1.2562						
3 I												
315	Petrol	55	03/81-03/84	ENGINE M10 B16 (164VB)								
Engine: All engines	Information: version Bosch						2.7494PHT	3.7573/15RS				
Engine: All engines	Information:										9.4005	
320 i	Petrol	92	06/75-08/82	ENGINE 18F209								
Engine: All engines	Information:					1.2562						

A10	CONDENSER	A20	CONTACT SET	A40	DISTRIBUTOR CAP	A50	ROTOR	A70	PICK-UP
C10	COIL	C20	IGNITION MODULE	C30	ELECTRONIC IGNITION KIT	E01	IGNITION CABLE SET		

The present application list is a brief version. For the detailed information about the possibility of installation on a specific vehicle, please refer to our web-catalogue http://catalogo.facet.eu/

Vehicle	alim.	kW	Date	Engine	FUNCTIONS ON THE VEHICLE							
					A10	A20	A40	A50	A70	C10 - C30	C20	E01

3 II

				ENGINE
316	Petrol	66	09/83-06/88	M10 B18 (184VC), M10 B18 (184VD)

Engine	Information	A10	A20	A40	A50	A70	C10 - C30	C20	E01
All engines	version Bosch			2.7494PHT	3.7573/15RS				
All engines	->year 30/09/83							9.4005	
All engines	without marten protection								4.8572

				ENGINE
316 i	Petrol	73	09/87-06/94	M40 B16 (164E1)

Engine	Information	A10	A20	A40	A50	A70	C10 - C30	C20	E01
All engines	version Bosch			2.7530/17PHT	3.7573/19RS				
All engines	without marten protection								4.8573

				ENGINE
316 i	Petrol	75	08/87-06/94	M10 B18 (184KA), M40 B16 (164E1)

Engine	Information	A10	A20	A40	A50	A70	C10 - C30	C20	E01
Eng. M10 B18 (184KA)	version Bosch			2.7494PHT	3.7555RS				
Eng. M40 B16 (164E1)	version Bosch			2.7530/17PHT	3.7573/19RS				
Eng. M10 B18 (184KA)	without marten protection								4.8572
Eng. M40 B16 (164E1)	without marten protection								4.8573

				ENGINE
318 i	Petrol	75	12/84-08/88	M10 B18 (184KA)

Engine	Information	A10	A20	A40	A50	A70	C10 - C30	C20	E01
All engines	version Bosch			2.7494PHT	3.7555RS, 3.7573/15RS				
All engines	without marten protection								4.8572

				ENGINE
318 i	Petrol	77	09/82-08/87	M10 B18 (184EA)

Engine	Information	A10	A20	A40	A50	A70	C10 - C30	C20	E01
All engines	version Bosch			2.7494PHT	3.7555RS, 3.7573/15RS				
All engines	without marten protection								4.8572

				ENGINE
318 i	Petrol	83	06/87-06/94	M40 B18 (184E1)

Engine	Information	A10	A20	A40	A50	A70	C10 - C30	C20	E01
All engines	version Bosch			2.7530/17PHT	3.7573/19RS				
All engines	without marten protection								4.8573

				ENGINE
318 i	Petrol	85	09/87-06/91	M40 B18 (184E1)

Engine	Information	A10	A20	A40	A50	A70	C10 - C30	C20	E01
All engines	version Bosch			2.7530/17PHT	3.7573/19RS				
All engines	without marten protection								4.8573

				ENGINE
318 is	Petrol	100	09/89-08/91	M42 B18 (184S1)

Engine	Information	A10	A20	A40	A50	A70	C10 - C30	C20	E01
All engines	Qty: 4						9.6062S C10		

				ENGINE
320 i	Petrol	110	12/85-06/90	M20 B20 (206KA)

Engine	Information	A10	A20	A40	A50	A70	C10 - C30	C20	E01
All engines	version Bosch			2.7530/8PHT	3.7573/19RS				
All engines	+automatic transmission								4.8587
All engines	+manual transmission								4.8597

				ENGINE
320 i	Petrol	92	09/82-12/91	M20 B20 (206EB)

Engine	Information	A10	A20	A40	A50	A70	C10 - C30	C20	E01
All engines	version Bosch			2.7530/8PHT	3.7573/19RS				
All engines	+automatic transmission								4.8587
All engines	+manual transmission								4.8597

				ENGINE
320 i	Petrol	93	07/87-10/93	M20 B20 (206KA)

Engine	Information	A10	A20	A40	A50	A70	C10 - C30	C20	E01
All engines	version Bosch			2.7530/8PHT	3.7573/19RS				

A10	CONDENSER	**A20**	CONTACT SET	**A40**	DISTRIBUTOR CAP	**A50**	ROTOR	**A70**	PICK-UP
C10	COIL	**C20**	IGNITION MODULE	**C30**	ELECTRONIC IGNITION KIT	**E01**	IGNITION CABLE SET		

The present application list is a brief version. For the detailed information about the possibility of installation on a specific vehicle, please refer to our web-catalogue http://catalogo.facet.eu/

Vehicle	alim.	kW	Date	Engine	FUNCTIONS ON THE VEHICLE							
					A10	A20	A40	A50	A70	C10 - C30	C20	E01
320 i	Petrol	**93**	07/87-10/93	**ENGINE** M20 B20 (206KA)								

Engine	Information	A10	A20	A40	A50	A70	C10 - C30	C20	E01
All engines	+automatic transmission								4.8587
All engines	+manual transmission								4.8597

320 i	Petrol	**95**	05/86-11/93	**ENGINE** M20 B20 (206KA)

Engine	Information	A10	A20	A40	A50	A70	C10 - C30	C20	E01
All engines	version Bosch			2.7530/8PHT	3.7573/19RS				
All engines	+automatic transmission								4.8587
All engines	+manual transmission								4.8597

323 i	Petrol	**102**	09/82-08/83	**ENGINE** M20 B23 (236EC)

Engine	Information	A10	A20	A40	A50	A70	C10 - C30	C20	E01
All engines	version Bosch			2.7521PHT	3.7560RS, 3.7573/12RS				
All engines	->year 30/09/84							9.4005	

323 i	Petrol	**110**	09/83-09/86	**ENGINE** M20 B23 (236EC)

Engine	Information	A10	A20	A40	A50	A70	C10 - C30	C20	E01
All engines	version Bosch			2.7521PHT	3.7560RS, 3.7573/12RS				
All engines	->year 30/09/84							9.4005	

325 e 2.7	Petrol	**90**	10/83-12/88	**ENGINE** M20 B27 (276KA), M20 B27 (276KB)

Engine	Information	A10	A20	A40	A50	A70	C10 - C30	C20	E01
All engines	version Bosch			2.7530/8PHT	3.7573/19RS				

325 e 2.7	Petrol	**95**	01/85-08/87	**ENGINE** M20 B27 (276KB)

Engine	Information	A10	A20	A40	A50	A70	C10 - C30	C20	E01
All engines	version Bosch			2.7530/8PHT	3.7573/19RS				

325 i	Petrol	**125**	12/86-11/93	**ENGINE** M20 B25 (256E1), M20 B25 (256E2), M20 B25 (256EX), M20 B25 (256K1)

Engine	Information	A10	A20	A40	A50	A70	C10 - C30	C20	E01
All engines	version Bosch			2.7530/8PHT	3.7573/19RS				
All engines	+automatic transmission, 01/10/87 ->								4.8587
All engines	->year 30/09/87								4.8597

325 i	Petrol	**126**	09/83-11/89	**ENGINE** M20 B25 (256E2)

Engine	Information	A10	A20	A40	A50	A70	C10 - C30	C20	E01
All engines	version Bosch			2.7530/8PHT	3.7573/19RS				
All engines	+automatic transmission, 01/10/87 ->								4.8587
All engines	->year 30/09/87								4.8597

325 i X	Petrol	**125**	09/86-10/93	**ENGINE** M20 B25 (256E1), M20 B25 (256E2), M20 B25 (256EX), M20 B25 (256K1)

Engine	Information	A10	A20	A40	A50	A70	C10 - C30	C20	E01
All engines	version Bosch			2.7530/8PHT	3.7573/19RS				

325 i X	Petrol	**126**	03/86-12/87	**ENGINE** M20 B25 (256E1), M20 B25 (256E2), M20 B25 (256EX), M20 B25 (256K1)

Engine	Information	A10	A20	A40	A50	A70	C10 - C30	C20	E01
All engines	version Bosch			2.7530/8PHT	3.7573/19RS				

A10	CONDENSER	**A20**	CONTACT SET	**A40**	DISTRIBUTOR CAP	**A50**	ROTOR	**A70**	PICK-UP
C10	COIL	**C20**	IGNITION MODULE	**C30**	ELECTRONIC IGNITION KIT	**E01**	IGNITION CABLE SET		

The present application list is a brief version. For the detailed information about the possibility of installation on a specific vehicle, please refer to our web-catalogue http://catalogo.facet.eu/

Vehicle	alim.	kW	Date	Engine	FUNCTIONS ON THE VEHICLE A10	A20	A40	A50	A70	C10 - C30	C20	E01

3 III

				ENGINE
316 g	Petrol/ Com- pressed Natural Gas (CNG)	**75**	02/96-08/00	**M43 B16 (164E2)**

Engine	Information	A10	A20	A40	A50	A70	C10 - C30		C20	E01
All engines	without marten protection									4.8900

				ENGINE
316 i	Petrol	**73**	03/91-08/93	**M40 B16 (164E1)**

Engine	Information	A10	A20	A40	A50	A70	C10 - C30		C20	E01
All engines	version Bosch			2.7530/17PHT	3.7573/19RS					
All engines	E36, without marten protection									4.8605

				ENGINE
316 i	Petrol	**75**	09/90-08/00	**M43 B16 (164E2)**

Engine	Information	A10	A20	A40	A50	A70	C10 - C30		C20	E01
All engines	version Bosch			2.7530/17PHT	3.7573/19RS					
All engines	E36, without marten protection									4.8605
All engines	without marten protection									4.8900

				ENGINE
316 i	Petrol	**77**	01/99-08/00	**M43 B19 (194E1)**

Engine	Information	A10	A20	A40	A50	A70	C10 - C30		C20	E01
All engines	without marten protection									4.8900

				ENGINE
318 i	Petrol	**83**	09/90-08/93	**M40 B18 (184E1)**

Engine	Information	A10	A20	A40	A50	A70	C10 - C30		C20	E01
All engines	version Bosch			2.7530/17PHT	3.7573/19RS					
All engines	E36, without marten protection									4.8605

				ENGINE
318 i	Petrol	**85**	09/93-11/99	**M43 B18 (184E2)**

Engine	Information	A10	A20	A40	A50	A70	C10 - C30		C20	E01
All engines	without marten protection									4.8900

				ENGINE
318 is	Petrol	**103**	01/92-04/99	**M42 B18 (184S1), M44 B19 (194S1)**

Engine	Information	A10	A20	A40	A50	A70	C10 - C30		C20	E01
Eng. M42 B18 (184S1)	->year 30/09/93, Qty: 4						9.6062S	C10		
All engines	01/10/93 ->									4.9921

				ENGINE
318 ti	Petrol	**103**	09/94-08/99	**M42 B18 (184S1), M44 B19 (194S1)**

Engine	Information	A10	A20	A40	A50	A70	C10 - C30		C20	E01
All engines										4.9921

				ENGINE
320 i	Petrol	**110**	01/91-11/99	**M50 B20 (206S1), M50 B20 (206S2), M52 B20 (206S3)**

Engine	Information	A10	A20	A40	A50	A70	C10 - C30		C20	E01
All engines	without spark plug connector, Qty: 6						9.6062S	C10		
All engines	+automatic transmission, RHD, without spark plug connector, Qty: 6						9.6252	C10		
All engines	incl. spark plug connector, Qty: 6						9.6312	C10		
All engines	+automatic transmission, RHD, incl. spark plug connector, Qty: 6						9.6313	C10		

				ENGINE
320 i	Petrol	**135**	11/19->	**B46 B20 B, B48 B20 A**

Engine	Information	A10	A20	A40	A50	A70	C10 - C30		C20	E01
All engines	x 4, COIL ON PLUG						9.6532	C10		

				ENGINE
323 i	Petrol	**125**	05/95-11/99	**M52 B25 (256S3)**

Engine	Information	A10	A20	A40	A50	A70	C10 - C30		C20	E01
All engines	without spark plug connector, Qty: 6						9.6252	C10		
All engines	incl. spark plug connector, Qty: 6						9.6313	C10		

A10	CONDENSER	**A20**	CONTACT SET	**A40**	DISTRIBUTOR CAP	**A50**	ROTOR	**A70**	PICK-UP
C10	COIL	**C20**	IGNITION MODULE	**C30**	ELECTRONIC IGNITION KIT	**E01**	IGNITION CABLE SET		

The present application list is a brief version. For the detailed information about the possibility of installation on a specific vehicle, please refer to our web-catalogue http://catalogo.facet.eu/

Vehicle	alim.	kW	Date	Engine	FUNCTIONS ON THE VEHICLE							
					A10	A20	A40	A50	A70	C10 - C30	C20	E01
323 ti	Petrol	120	01/99-08/00	**M52 B25 (256S3)**								
All engines	without spark plug connector, Qty: 6									9.6252 C10		
All engines	incl. spark plug connector, Qty: 6									9.6313 C10		
323 ti	Petrol	125	09/97-08/00	**M52 B25 (256S3)**								
All engines	without spark plug connector, Qty: 6									9.6252 C10		
All engines	incl. spark plug connector, Qty: 6									9.6313 C10		
325 i	Petrol	141	09/90-12/95	**M50 B25 (256S1), M50 B25 (256S2)**								
All engines	without spark plug connector, Qty: 6									9.6062S C10		
All engines	incl. spark plug connector, Qty: 6									9.6312 C10		
328 i	Petrol	142	01/95-11/99	**M52 B28 (286S1)**								
All engines	without spark plug connector, Qty: 6									9.6252 C10		
All engines	incl. spark plug connector, Qty: 6									9.6313 C10		
330 i	Petrol	190	07/19->	**B48 B20 B**								
All engines	x 4, COIL ON PLUG									9.6532 C10		
M 340 i xDrive	Petrol	275	11/19->	**B58 B30 B**								
All engines	x 6, COIL ON PLUG									9.6532 C10		
M3 3.0	Petrol	210	11/92-07/95	**S50 B30 (306S1)**								
All engines	without spark plug connector, Qty: 6									9.6062S C10		
All engines	incl. spark plug connector, Qty: 6									9.6312 C10		
M3 3.0	Petrol	217	09/93-05/95	**S50 B30 (306S1)**								
All engines	without spark plug connector, Qty: 6									9.6062S C10		
All engines	incl. spark plug connector, Qty: 6									9.6312 C10		
M3 3.2	Petrol	236	10/95-09/99	**S50 B32 (326S1)**								
All engines	without spark plug connector, Qty: 6									9.6252 C10		
All engines	incl. spark plug connector, Qty: 6									9.6313 C10		
3 IV												
316 Ci	Petrol	77	04/00-07/06	**M43 B16 (164E3)**								
All engines												4.7069
316 Ci	Petrol	85	10/01->	**N40 B16 A, N45 B16 A**								
Eng. N40 B16 A	Qty: 4									9.6375 C10		
Eng. N45 B16 A	x 4, DELPHI, ELDOR, COIL ON PLUG									9.6375 C10		
316 i	Petrol	77	12/98-02/05	**M43 B16 (164E3), M43 B19 (194E1)**								
All engines												4.7069

A10	CONDENSER	**A20**	CONTACT SET	**A40**	DISTRIBUTOR CAP	**A50**	ROTOR	**A70**	PICK-UP
C10	COIL	**C20**	IGNITION MODULE	**C30**	ELECTRONIC IGNITION KIT	**E01**	IGNITION CABLE SET		

The present application list is a brief version. For the detailed information about the possibility of installation on a specific vehicle, please refer to our web-catalogue http://catalogo.facet.eu/

Vehicle	alim.	kW	Date	Engine	FUNCTIONS ON THE VEHICLE A10	A20	A40	A50	A70	C10 - C30	C20	E01
316 i	Petrol	85	02/02-02/05	ENGINE: N40 B16 A, N42 B18 A, N45 B16 A, N46 B18 A								
Engine	Information											
All engines	01/04/03 ->, x 4, BREMI, x 4, COIL ON PLUG, DELPHI, ELDOR, x 4, COIL ON PLUG, DELPHI, COIL ON PLUG						9.6375 C10				
Eng. N45 B16 A	Qty: 4						9.6375 C10				
316 ti	Petrol	85	06/01-02/05	ENGINE: N40 B16 A, N42 B18 A, N45 B16 A, N46 B18 A								
Engine	Information											
All engines	01/04/03 ->, x 4, BREMI, x 4, COIL ON PLUG, DELPHI, ELDOR, x 4, COIL ON PLUG, DELPHI, COIL ON PLUG						9.6375 C10				
318 Ci	Petrol	100	12/00-08/06	ENGINE: N42 B20 A, N46 B20 A								
Engine	Information											
All engines	01/04/03 ->, x 4, DELPHI, x 4, COIL ON PLUG, DELPHI, COIL ON PLUG						9.6375 C10				
Eng. N46 B20 A	Qty: 4						9.6375 C10				
318 Ci	Petrol	105	09/01-12/07	ENGINE: N42 B20 A, N46 B20 A								
Engine	Information											
All engines	01/04/03 ->, x 4, BREMI, x 4, COIL ON PLUG, DELPHI, x 4, COIL ON PLUG, DELPHI, COIL ON PLUG						9.6375 C10				
Eng. N46 B20 A	Qty: 4						9.6375 C10				
318 Ci	Petrol	110	03/04-08/06	ENGINE: N46 B20 A, N46 B20 B, N46 B20 C								
Engine	Information											
Eng. N46 B20 A, N46 B20 C	x 4, DELPHI, COIL ON PLUG						9.6375 C10				
Eng. N46 B20 B	Qty: 4						9.6375 C10				
318 Ci	Petrol	85	12/99-08/01	ENGINE: M43 B19 (194E1)								
Engine	Information											
All engines												4.7069
318 Ci	Petrol	87	12/99-08/01	ENGINE: M43 B19 (194E1)								
Engine	Information											
All engines												4.7069
318 i	Petrol	100	09/01-02/05	ENGINE: N42 B20 A								
Engine	Information											
All engines	01/03/03 ->, x 4, DELPHI, COIL ON PLUG						9.6375 C10				
318 i	Petrol	105	09/01-07/05	ENGINE: N42 B20 A, N46 B20 A, N46 B20 C								
Engine	Information											
All engines	01/04/03 ->, x 4, BREMI, x 4, COIL ON PLUG, DELPHI, x 4, COIL ON PLUG, DELPHI, COIL ON PLUG						9.6375 C10				
318 i	Petrol	85	10/99-09/01	ENGINE: M43 B19 (194E1)								
Engine	Information											
All engines												4.7069
318 i	Petrol	87	12/97-09/01	ENGINE: M43 B19 (194E1)								
Engine	Information											
All engines												4.7069
318 ti	Petrol	100	03/01-12/04	ENGINE: N42 B20 A, N46 B20 A								
Engine	Information											
All engines	01/03/03 ->, x 4, DELPHI, COIL ON PLUG						9.6375 C10				
318 ti	Petrol	105	03/01-12/04	ENGINE: N42 B20 A, N46 B20 A								
Engine	Information											
All engines	01/04/03 ->, x 4, BREMI, COIL ON PLUG, x 4, DELPHI, COIL ON PLUG						9.6375 C10				

A10	CONDENSER	**A20**	CONTACT SET	**A40**	DISTRIBUTOR CAP	**A50**	ROTOR	**A70**	PICK-UP
C10	COIL	**C20**	IGNITION MODULE	**C30**	ELECTRONIC IGNITION KIT	**E01**	IGNITION CABLE SET		

The present application list is a brief version. For the detailed information about the possibility of installation on a specific vehicle, please refer to our web-catalogue http://catalogo.facet.eu/

Vehicle	alim.	kW	Date	Engine	FUNCTIONS ON THE VEHICLE A10	A20	A40	A50	A70	C10 - C30	C20	E01
320 Ci	Petrol	110	02/99-08/01	ENGINE M52 B20 (206S4), M52B206S4								

Engine	Information	A10	A20	A40	A50	A70	C10 - C30		C20	E01
Eng. M52 B20 (206S4)	->year 30/09/02, without spark plug connector, Qty: 6						9.6252	C10		
Eng. M52B206S4	x 6, BOSCH, BREMI, COIL ON PLUG, incl. spark plug connector						9.6252	C10		
Eng. M52 B20 (206S4)	->year 30/09/02, incl. spark plug connector, Qty: 6						9.6313	C10		
Eng. M52 B20 (206S4)	01/10/02 ->, Qty: 6						9.6375	C10		

320 Ci	Petrol	120	01/00-12/07	ENGINE M54 B22 (226S1), M54B226S1

Engine	Information	A10	A20	A40	A50	A70	C10 - C30		C20	E01
Eng. M54 B22 (226S1)	->year 30/09/02, without spark plug connector, Qty: 6						9.6252	C10		
Eng. M54B226S1	->year 01/09/02, x 6, BREMI, COIL ON PLUG						9.6252	C10		
Eng. M54 B22 (226S1)	->year 30/09/02, incl. spark plug connector, Qty: 6						9.6313	C10		
Eng. M54 B22 (226S1)	01/10/02 ->, Qty: 6						9.6375	C10		
Eng. M54B226S1	01/09/02 ->, x 6, DELPHI, COIL ON PLUG ---------- 01/10/02 ->, x 6, DELPHI, COIL ON PLUG						9.6375	C10		

320 Ci	Petrol	125	01/00-12/07	ENGINE M54 B22 (226S1), M54B226S1

Engine	Information	A10	A20	A40	A50	A70	C10 - C30		C20	E01
Eng. M54 B22 (226S1)	->year 30/09/02, without spark plug connector, Qty: 6						9.6252	C10		
Eng. M54B226S1	->year 01/09/02, x 6, BOSCH, BREMI, COIL ON PLUG, incl. spark plug connector						9.6252	C10		
Eng. M54 B22 (226S1)	->year 30/09/02, incl. spark plug connector, Qty: 6						9.6313	C10		
Eng. M54 B22 (226S1)	01/10/02 ->, Qty: 6						9.6375	C10		
Eng. M54B226S1	01/10/02 ->, x 6, DELPHI, COIL ON PLUG						9.6375	C10		

320 i	Petrol	110	03/98-09/00	ENGINE M52 B20 (206S4), M52B206S4

Engine	Information	A10	A20	A40	A50	A70	C10 - C30		C20	E01
Eng. M52 B20 (206S4)	->year 30/09/02, without spark plug connector, Qty: 6						9.6252	C10		
Eng. M52B206S4	x 6, BOSCH, BREMI, COIL ON PLUG, incl. spark plug connector						9.6252	C10		
Eng. M52 B20 (206S4)	->year 30/09/02, incl. spark plug connector, Qty: 6						9.6313	C10		
Eng. M52 B20 (206S4)	01/10/02 ->, Qty: 6						9.6375	C10		

320 i	Petrol	120	09/00-02/05	ENGINE 4F8Q 636, M54 B22 (226S1), M54B226S1

Engine	Information	A10	A20	A40	A50	A70	C10 - C30		C20	E01
Eng. 4F8Q 636, M54B226S1	->year 01/08/02, x 6, BREMI, COIL ON PLUG						9.6252	C10		
Eng. M54 B22 (226S1)	->year 30/09/02, without spark plug connector, Qty: 6						9.6252	C10		
Eng. M54 B22 (226S1)	->year 30/09/02, incl. spark plug connector, Qty: 6						9.6313	C10		
Eng. 4F8Q 636, M54B226S1	01/09/02 ->, x 6, DELPHI, COIL ON PLUG						9.6375	C10		
Eng. M54 B22 (226S1)	01/10/02 ->, Qty: 6						9.6375	C10		

320 i	Petrol	125	09/00-02/05	ENGINE 4F8Q 636, M54 B22 (226S1), M54B226S1

Engine	Information	A10	A20	A40	A50	A70	C10 - C30		C20	E01
Eng. 4F8Q 636, M54B226S1	->year 01/09/02, x 6, BOSCH, BREMI, COIL ON PLUG, incl. spark plug connector						9.6252	C10		
Eng. M54 B22 (226S1)	->year 30/09/02, without spark plug connector, Qty: 6						9.6252	C10		
Eng. M54 B22 (226S1)	->year 30/09/02, incl. spark plug connector, Qty: 6						9.6313	C10		
Eng. 4F8Q 636, M54B226S1	01/10/02 ->, x 6, DELPHI, COIL ON PLUG						9.6375	C10		
Eng. M54 B22 (226S1)	01/10/02 ->, Qty: 6						9.6375	C10		

323 Ci	Petrol	120	04/99-09/00	ENGINE 8CLS, M52 B25 (256S4), M52B256S4

Engine	Information	A10	A20	A40	A50	A70	C10 - C30		C20	E01
Eng. 8CLS, M52B256S4	x 6, BREMI, COIL ON PLUG						9.6252	C10		
Eng. M52 B25 (256S4)	without spark plug connector, Qty: 6						9.6252	C10		
Eng. M52 B25 (256S4)	incl. spark plug connector, Qty: 6						9.6313	C10		

A10	CONDENSER	A20	CONTACT SET	A40	DISTRIBUTOR CAP	A50	ROTOR	A70	PICK-UP
C10	COIL	C20	IGNITION MODULE	C30	ELECTRONIC IGNITION KIT	E01	IGNITION CABLE SET		

The present application list is a brief version. For the detailed information about the possibility of installation on a specific vehicle, please refer to our web-catalogue http://catalogo.facet.eu/

Vehicle	alim.	kW	Date	Engine	FUNCTIONS ON THE VEHICLE A10	A20	A40	A50	A70	C10 - C30	C20	E01
323 Ci	Petrol	125	04/99-09/00	ENGINE: 0LF8, M52 B25 (256S4), M52B256S4								

Engine	Information	A10	A20	A40	A50	A70	C10 - C30		C20	E01
Eng. 0LF8, M52B256S4	x 6, BOSCH, BREMI, COIL ON PLUG, incl. spark plug connector						9.6252	C10		
Eng. M52 B25 (256S4)	without spark plug connector, Qty: 6						9.6252	C10		
Eng. M52 B25 (256S4)	incl. spark plug connector, Qty: 6						9.6313	C10		

323 i	Petrol	120	03/98-09/00	ENGINE: M52 B25 (256S4), M52B256S4								

Engine	Information	A10	A20	A40	A50	A70	C10 - C30		C20	E01
Eng. M52 B25 (256S4)	without spark plug connector, Qty: 6						9.6252	C10		
Eng. M52B256S4	x 6, BREMI, COIL ON PLUG						9.6252	C10		
Eng. M52 B25 (256S4)	incl. spark plug connector, Qty: 6						9.6313	C10		

323 i	Petrol	125	03/98-09/00	ENGINE: M52 B25 (256S4), M52B256S4								

Engine	Information	A10	A20	A40	A50	A70	C10 - C30		C20	E01
Eng. M52 B25 (256S4)	without spark plug connector, Qty: 6						9.6252	C10		
Eng. M52B256S4	x 6, BOSCH, BREMI, COIL ON PLUG, incl. spark plug connector						9.6252	C10		
Eng. M52 B25 (256S4)	incl. spark plug connector, Qty: 6						9.6313	C10		

323 i	Petrol	135	03/99-12/03	ENGINE: - (24 6 S3)								

Engine	Information	A10	A20	A40	A50	A70	C10 - C30		C20	E01
All engines	without spark plug connector, Qty: 6						9.6252	C10		
All engines	incl. spark plug connector, Qty: 6						9.6313	C10		

325 Ci	Petrol	137	01/01->	ENGINE: M56256S6								

Engine	Information	A10	A20	A40	A50	A70	C10 - C30		C20	E01
All engines	->year 30/09/02, without spark plug connector, Qty: 6						9.6252	C10		
All engines	->year 30/09/02, incl. spark plug connector, Qty: 6						9.6313	C10		
All engines	01/10/02 ->, Qty: 6						9.6375	C10		

325 Ci	Petrol	141	09/00-08/06	ENGINE: 4CSS, M54 B25 (256S5), M54B256S5								

Engine	Information	A10	A20	A40	A50	A70	C10 - C30		C20	E01
Eng. 4CSS, M54B256S5	x 6, BOSCH, BREMI, COIL ON PLUG, incl. spark plug connector						9.6252	C10		
Eng. M54 B25 (256S5)	->year 30/09/02, without spark plug connector, Qty: 6						9.6252	C10		
Eng. M54 B25 (256S5)	->year 30/09/02, incl. spark plug connector, Qty: 6						9.6313	C10		
Eng. 4CSS, M54B256S5	01/10/02 ->, x 6, DELPHI, COIL ON PLUG						9.6375	C10		
Eng. M54 B25 (256S5)	01/10/02 ->, Qty: 6						9.6375	C10		

325 i	Petrol	137	01/01->	ENGINE: M56256S6								

Engine	Information	A10	A20	A40	A50	A70	C10 - C30		C20	E01
All engines	->year 30/09/02, without spark plug connector, Qty: 6						9.6252	C10		
All engines	->year 30/09/02, incl. spark plug connector, Qty: 6						9.6313	C10		
All engines	01/10/02 ->, Qty: 6						9.6375	C10		

325 i	Petrol	141	09/00->	ENGINE: - (24 6 S4), M54 B25 (256S5), M54B256S5								

Engine	Information	A10	A20	A40	A50	A70	C10 - C30		C20	E01
Eng. - (24 6 S4), M54 B25 (256S5)	->year 30/09/02, without spark plug connector, Qty: 6						9.6252	C10		
Eng. M54B256S5	->year 01/09/02, x 6, BREMI, COIL ON PLUG						9.6252	C10		
Eng. - (24 6 S4), M54 B25 (256S5)	->year 30/09/02, incl. spark plug connector, Qty: 6						9.6313	C10		
Eng. - (24 6 S4), M54 B25 (256S5)	01/10/02 ->, Qty: 6						9.6375	C10		
Eng. M54B256S5	01/10/02 ->, x 6, DELPHI, COIL ON PLUG						9.6375	C10		

325 ti	Petrol	141	04/01-12/04	ENGINE: M54 B25 (256S5), M54B256S5								

Engine	Information	A10	A20	A40	A50	A70	C10 - C30		C20	E01
Eng. M54 B25 (256S5)	->year 30/09/02, without spark plug connector, Qty: 6						9.6252	C10		

A10	CONDENSER	A20	CONTACT SET	A40	DISTRIBUTOR CAP	A50	ROTOR	A70	PICK-UP
C10	COIL	C20	IGNITION MODULE	C30	ELECTRONIC IGNITION KIT	E01	IGNITION CABLE SET		

The present application list is a brief version. For the detailed information about the possibility of installation on a specific vehicle, please refer to our web-catalogue http://catalogo.facet.eu/

Vehicle	alim.	kW	Date	Engine	FUNCTIONS ON THE VEHICLE A10	A20	A40	A50	A70	C10 - C30	C20	E01
325 ti	Petrol	141	04/01-12/04	ENGINE M54 B25 (256S5), M54B256S5								

Engine	Information	A10	A20	A40	A50	A70	C10 - C30		C20	E01
Eng. M54B256S5	x 6, BOSCH, BREMI, COIL ON PLUG, incl. spark plug connector						9.6252	C10		
Eng. M54 B25 (256S5)	->year 30/09/02, incl. spark plug connector, Qty: 6						9.6313	C10		
Eng. M54 B25 (256S5)	01/10/02 ->, Qty: 6						9.6375	C10		
Eng. M54B256S5	01/10/02 ->, x 6, DELPHI, COIL ON PLUG						9.6375	C10		

325 xi	Petrol	141	09/00-02/05	ENGINE M54 B25 (256S5), M54B256S5								

Engine	Information	A10	A20	A40	A50	A70	C10 - C30		C20	E01
Eng. M54 B25 (256S5)	->year 30/09/02, without spark plug connector, Qty: 6						9.6252	C10		
Eng. M54B256S5	->year 01/09/02, x 6, BREMI, COIL ON PLUG						9.6252	C10		
Eng. M54 B25 (256S5)	->year 30/09/02, incl. spark plug connector, Qty: 6						9.6313	C10		
Eng. M54 B25 (256S5)	01/10/02 ->, Qty: 6						9.6375	C10		
Eng. M54B256S5	01/10/02 ->, x 6, DELPHI, COIL ON PLUG						9.6375	C10		

328 Ci	Petrol	142	12/98-05/00	ENGINE M52 B28 (286S2), M52B286S2								

Engine	Information	A10	A20	A40	A50	A70	C10 - C30		C20	E01
Eng. M52 B28 (286S2)	without spark plug connector, Qty: 6						9.6252	C10		
Eng. M52B286S2	x 6, BOSCH, BREMI, COIL ON PLUG, incl. spark plug connector						9.6252	C10		
Eng. M52 B28 (286S2)	incl. spark plug connector, Qty: 6						9.6313	C10		

328 i	Petrol	142	02/98-06/00	ENGINE 1LGX, M52 B28 (286S2), M52B286S2								

Engine	Information	A10	A20	A40	A50	A70	C10 - C30		C20	E01
Eng. 1LGX, M52B286S2	x 6, BOSCH, BREMI, COIL ON PLUG, incl. spark plug connector						9.6252	C10		
Eng. M52 B28 (286S2)	without spark plug connector, Qty: 6						9.6252	C10		
Eng. M52 B28 (286S2)	incl. spark plug connector, Qty: 6						9.6313	C10		

330 Ci	Petrol	170	06/00-08/06	ENGINE 7ACR, M54 B30 (306S3), M54B306S3								

Engine	Information	A10	A20	A40	A50	A70	C10 - C30		C20	E01
Eng. 7ACR, M54B306S3	x 6, BOSCH, BREMI, COIL ON PLUG, incl. spark plug connector						9.6252	C10		
Eng. M54 B30 (306S3)	->year 30/09/02, without spark plug connector, Qty: 6						9.6252	C10		
Eng. M54 B30 (306S3)	->year 30/09/02, incl. spark plug connector, Qty: 6						9.6313	C10		
Eng. 7ACR, M54B306S3	01/10/02 ->, x 6, DELPHI, COIL ON PLUG						9.6375	C10		
Eng. M54 B30 (306S3)	01/10/02 ->, Qty: 6						9.6375	C10		

330 i	Petrol	168	01/01-04/05	ENGINE M54B306S3								

Engine	Information	A10	A20	A40	A50	A70	C10 - C30		C20	E01
All engines	->year 01/09/02, x 6, BREMI, COIL ON PLUG						9.6252	C10		
All engines	01/10/02 ->, x 6, DELPHI, COIL ON PLUG						9.6375	C10		

330 i	Petrol	170	06/00-02/05	ENGINE M54 B30 (306S3), M54B306S3								

Engine	Information	A10	A20	A40	A50	A70	C10 - C30		C20	E01
Eng. M54 B30 (306S3)	->year 30/09/02, without spark plug connector, Qty: 6						9.6252	C10		
Eng. M54B306S3	->year 01/09/02, x 6, BREMI, COIL ON PLUG						9.6252	C10		
Eng. M54 B30 (306S3)	->year 30/09/02, incl. spark plug connector, Qty: 6						9.6313	C10		
Eng. M54 B30 (306S3)	01/10/02 ->, Qty: 6						9.6375	C10		
Eng. M54B306S3	01/10/02 ->, x 6, DELPHI, COIL ON PLUG						9.6375	C10		

330 xi	Petrol	170	06/00-07/06	ENGINE M54 B30 (306S3), M54B306S3								

Engine	Information	A10	A20	A40	A50	A70	C10 - C30		C20	E01
Eng. M54 B30 (306S3)	->year 30/09/02, without spark plug connector, Qty: 6						9.6252	C10		
Eng. M54B306S3	->year 01/09/02, x 6, BREMI, COIL ON PLUG						9.6252	C10		
Eng. M54 B30 (306S3)	->year 30/09/02, incl. spark plug connector, Qty: 6						9.6313	C10		
Eng. M54 B30 (306S3)	01/10/02 ->, Qty: 6						9.6375	C10		
Eng. M54B306S3	01/10/02 ->, x 6, DELPHI, COIL ON PLUG						9.6375	C10		

A10	CONDENSER	A20	CONTACT SET	A40	DISTRIBUTOR CAP	A50	ROTOR	A70	PICK-UP
C10	COIL	C20	IGNITION MODULE	C30	ELECTRONIC IGNITION KIT	E01	IGNITION CABLE SET		

The present application list is a brief version. For the detailed information about the possibility of installation on a specific vehicle, please refer to our web-catalogue http://catalogo.facet.eu/

Vehicle	alim.	kW	Date	Engine	FUNCTIONS ON THE VEHICLE A10	A20	A40	A50	A70	C10 - C30	C20	E01
M3	Petrol	252	07/00-08/06	S54 B32 (326S4), S54B326S4								
Engine	Information											
Eng. S54 B32 (326S4)	Qty: 6									9.6375 C10		
Eng. S54B326S4	x 6, BREMI, DELPHI, ELDOR, COIL ON PLUG									9.6375 C10		
M3 CSL	Petrol	265	05/03-12/03	S54 B32 (326S4), S54B326S4								
Engine	Information											
Eng. S54 B32 (326S4)	Qty: 6									9.6375 C10		
Eng. S54B326S4	x 6, BREMI, DELPHI, ELDOR, COIL ON PLUG									9.6375 C10		
3 SERIES												
325i xDrive	Petrol	160	09/08-10/11	N52 B25 A								
Engine	Information											
All engines	x 6, DELPHI, COIL ON PLUG									9.6375 C10		
3 V												
316 i	Petrol	85	09/05-10/11	N45 B16 A								
Engine	Information											
All engines	x 4, DELPHI, ELDOR, COIL ON PLUG									9.6375 C10		
316 i	Petrol	90	09/07-06/13	N43 B16 A, N43 B16 AA								
Engine	Information											
All engines	x 4, BOSCH, COIL ON PLUG									9.6507 C10		
318 i	Petrol	100	09/07-03/12	N43 B20 A, N46 B20 B								
Engine	Information											
Eng. N46 B20 B	Qty: 4									9.6375 C10		
Eng. N46 B20 B	x 4, DELPHI, COIL ON PLUG									9.6375 C10		
Eng. N43 B20 A	x 4, BOSCH, COIL ON PLUG									9.6507 C10		
318 i	Petrol	105	05/07-12/13	N43 B20 A								
Engine	Information											
All engines	x 4, BOSCH, COIL ON PLUG									9.6507 C10		
318 i	Petrol	95	09/05-08/07	N46 B20 B								
Engine	Information											
All engines	x 4, DELPHI, COIL ON PLUG									9.6375 C10		
320 i	Petrol	110	12/04-06/12	N46 B20 A, N46 B20 B, N46 B20 C, N46 B20 CB								
Engine	Information											
Eng. N46 B20 A	Qty: 4									9.6375 C10		
Eng. N46 B20 B, N46 B20 C, N46 B20 CB	x 4, DELPHI, COIL ON PLUG									9.6375 C10		
320 i	Petrol	115	09/05-12/13	N43 B20 A, N46 B20 B, N46 B20 C								
Engine	Information											
Eng. N46 B20 B, N46 B20 C	x 4, DELPHI, COIL ON PLUG									9.6375 C10		
Eng. N43 B20 A	x 4, BOSCH, COIL ON PLUG									9.6507 C10		
320 i	Petrol	120	09/06-12/13	N43 B20 A								
Engine	Information											
All engines	x 4, BOSCH, COIL ON PLUG									9.6507 C10		
320 i	Petrol	125	02/07-12/13	N43 B20 A								
Engine	Information											
All engines	x 4, BOSCH, COIL ON PLUG									9.6507 C10		

A10	CONDENSER	A20	CONTACT SET	A40	DISTRIBUTOR CAP	A50	ROTOR	A70	PICK-UP
C10	COIL	C20	IGNITION MODULE	C30	ELECTRONIC IGNITION KIT	E01	IGNITION CABLE SET		

The present application list is a brief version. For the detailed information about the possibility of installation on a specific vehicle, please refer to our web-catalogue http://catalogo.facet.eu/

Vehicle	alim.	kW	Date	Engine	FUNCTIONS ON THE VEHICLE A10	A20	A40	A50	A70	C10 - C30	C20	E01
320 si	Petrol	127	09/05-08/06	N45 B20 A						9.6375 C10		
323 i	Petrol	130	09/05->	N52 B25 A, N52 B25 B, N52 B25 BE, N52 B25 BF, N52B25B, N52B25BE, N52N B25 A, N52NB-25BF						9.6375 C10		
323 i	Petrol	140	04/06-02/12	N52 B25 A, N52 B25 BF						9.6375 C10		
325 i	Petrol	150	05/05-10/13	N52 B25 A, N52 B25 AF, N52 B25 BF						9.6375 C10		
325 i	Petrol	155	12/04-12/13	N52 B25 A, N52 B25 AF, N52 B25 BF, N53 B30 A						9.6375 C10 9.6507 C10		
325 i	Petrol	160	12/04->	N52 B25 A, N52 B25 AF, N52 B25 B, N52 B25 BF, N52B25B, N53 B30 A						9.6375 C10 9.6507 C10		
325 i xDrive	Petrol	150	03/10-04/13	N52 B25 A						9.6375 C10		
325 i xDrive	Petrol	155	09/08-06/13	N53 B30 A						9.6507 C10		
325 i xDrive	Petrol	160	09/08-12/13	N53 B30 A						9.6507 C10		
325 xi	Petrol	155	09/07-08/08	N53 B30 A						9.6507 C10		
325 xi	Petrol	160	01/05->	N52 B25 A, N52 B30 A, N53 B30 A						9.6375 C10 9.6507 C10		

Engine	Information
All engines	x 4, DELPHI, ELDOR, COIL ON PLUG
Eng. N52 B25 A, N52 B25 B, N52 B25 BE, N52 B25 BF	x 6, BOSCH, DELPHI, COIL ON PLUG
Eng. N52 B25 A, N52B25B, N52B25BE, N52N B25 A, N52NB25BF	Qty: 6, Qty: 6
All engines	x 6, DELPHI, ELDOR, COIL ON PLUG
All engines	x 6, DELPHI, COIL ON PLUG
Eng. N52 B25 A	Qty: 6
Eng. N52 B25 A, N52 B25 AF, N52 B25 BF	x 6, DELPHI, x 6, BOSCH, COIL ON PLUG, DELPHI, x 6, BOSCH, COIL ON PLUG, DELPHI, COIL ON PLUG --- x 6, DELPHI, COIL ON PLUG
Eng. N53 B30 A	x 6, BOSCH, COIL ON PLUG
Eng. N52 B25 A, N52 B25 AF, N52 B25 B, N52 B25 BF	x 6, DELPHI, x 6, BOSCH, COIL ON PLUG, DELPHI, COIL ON PLUG
Eng. N52 B25 BF, N52B25B	Qty: 6
Eng. N53 B30 A	x 6, BOSCH, COIL ON PLUG
All engines	x 6, DELPHI, ELDOR, COIL ON PLUG
All engines	x 6, BOSCH, COIL ON PLUG
All engines	x 6, BOSCH, COIL ON PLUG
All engines	x 6, BOSCH, COIL ON PLUG
Eng. N52 B25 A	x 6, DELPHI, x 6, BOSCH, COIL ON PLUG, DELPHI, COIL ON PLUG --- x 6, BOSCH, DELPHI, COIL ON PLUG
Eng. N52 B30 A	Qty: 6

A10	CONDENSER	A20	CONTACT SET	A40	DISTRIBUTOR CAP	A50	ROTOR	A70	PICK-UP
C10	COIL	C20	IGNITION MODULE	C30	ELECTRONIC IGNITION KIT	E01	IGNITION CABLE SET		

The present application list is a brief version. For the detailed information about the possibility of installation on a specific vehicle, please refer to our web-catalogue http://catalogo.facet.eu/

Vehicle	alim.	kW	Date	Engine	FUNCTIONS ON THE VEHICLE: A10	A20	A40	A50	A70	C10 - C30	C20	E01
325 xi	Petrol	160	01/05->	N52 B25 A, N52 B30 A, N53 B30 A								
Eng. N53 B30 A	x 6, BOSCH, COIL ON PLUG									9.6507 C10		
328 i	Petrol	172	06/06->	N51 B30 A, N52 B30 A								
All engines	Qty: 6									9.6375 C10		
Eng. N51 B30 A	x 6, DELPHI, COIL ON PLUG									9.6375 C10		
328 i	Petrol	187	07/05-11/07	N52N B30 A								
All engines	Qty: 6									9.6375 C10		
328 xi	Petrol	172	09/06->	N51 B30 A, N52 B30 A								
All engines	Qty: 6									9.6375 C10		
330 i	Petrol	190	12/04-10/13	N52 B30 A, N52 B30 BF								
All engines	x 6, DELPHI, x 6, BOSCH, COIL ON PLUG, DELPHI, COIL ON PLUG									9.6375 C10		
330 i	Petrol	200	09/06-10/13	N52 B30 A, N52 B30 B, N52 B30 BF, N53 B30 A								
Eng. N52 B30 A, N52 B30 BF, N53 B30 A	-eng. N53B30A, x 6, DELPHI, x 6, COIL ON PLUG, DELPHI, COIL ON PLUG									9.6375 C10		
Eng. N52 B30 B	Qty: 6									9.6375 C10		
Eng. N52 B30 A, N52 B30 BF, N53 B30 A	x 6, BOSCH, x 6, BOSCH, COIL ON PLUG, COIL ON PLUG									9.6507 C10		
330 i xDrive	Petrol	200	09/07-06/13	N53 B30 A								
All engines	->year 01/12/08, x 6, BOSCH, x 6, BOSCH, COIL ON PLUG, COIL ON PLUG ---------- 01/04/12 ->, x 6, BOSCH, COIL ON PLUG									9.6507 C10		
330 xi	Petrol	190	09/05-08/07	N52 B30 A								
All engines	x 6, DELPHI, x 6, BOSCH, COIL ON PLUG, DELPHI, COIL ON PLUG									9.6375 C10		
330 xi	Petrol	200	09/06-06/12	N52 B30 A, N53 B30 A								
Eng. N52 B30 A	x 6, DELPHI, ELDOR, COIL ON PLUG									9.6375 C10		
Eng. N53 B30 A	x 6, BOSCH, x 6, BOSCH, COIL ON PLUG, COIL ON PLUG									9.6507 C10		
335 i	Petrol	220	03/06-12/11	N54 B30 A, N55 B30 A								
All engines	x 6, DELPHI, ELDOR, COIL ON PLUG									9.6375 C10		
335 i	Petrol	224	03/06-12/11	N54 B30 A, N55 B30 A								
All engines	x 6, DELPHI, ELDOR, COIL ON PLUG									9.6375 C10		
335 i	Petrol	225	06/06-10/13	N54 B30 A, N54 B30 B, N55 B30 A								
Eng. N54 B30 A, N55 B30 A	x 6, DELPHI, ELDOR, COIL ON PLUG									9.6375 C10		
Eng. N54 B30 B	Qty: 6									9.6375 C10		

A10	CONDENSER	A20	CONTACT SET	A40	DISTRIBUTOR CAP	A50	ROTOR	A70	PICK-UP
C10	COIL	C20	IGNITION MODULE	C30	ELECTRONIC IGNITION KIT	E01	IGNITION CABLE SET		

The present application list is a brief version. For the detailed information about the possibility of installation on a specific vehicle, please refer to our web-catalogue http://catalogo.facet.eu/

Vehicle	alim.	kW	Date	Engine	FUNCTIONS ON THE VEHICLE							
					A10	A20	A40	A50	A70	C10 - C30	C20	E01
335 i	Petrol	240	03/06-10/13	**N54 B30 A, N55 B30 A**								
All engines				x 6, DELPHI, ELDOR, COIL ON PLUG						9.6375 C10		
335 i xDrive	Petrol	224	05/08-06/13	**N54 B30 A, N55 B30 A**								
All engines				x 6, DELPHI, ELDOR, x 6, COIL ON PLUG, DELPHI, COIL ON PLUG						9.6375 C10		
335 i xDrive	Petrol	225	09/08-12/13	**N54 B30 A, N55 B30 A**								
All engines				x 6, DELPHI, ELDOR, COIL ON PLUG						9.6375 C10		
335 i xDrive	Petrol	240	05/08-06/13	**N54 B30 A, N55 B30 A**								
All engines				x 6, DELPHI, ELDOR, COIL ON PLUG						9.6375 C10		
335 xi	Petrol	224	09/06-06/08	**N54 B30 A, N55 B30 A**								
All engines				x 6, ELDOR, x 6, COIL ON PLUG, DELPHI, COIL ON PLUG						9.6375 C10		
335 xi	Petrol	225	03/07-02/10	**N54 B30 A, N55 B30 A**								
Eng. N54 B30 A				x 6, DELPHI, ELDOR, COIL ON PLUG						9.6375 C10		
Eng. N55 B30 A				Qty: 6						9.6375 C10		
335 xi	Petrol	240	09/06-02/10	**N54 B30 A, N55 B30 A**								
All engines				x 6, DELPHI, ELDOR, x 6, COIL ON PLUG, DELPHI, ELDOR, COIL ON PLUG						9.6375 C10		
3 VI												
316 i	Petrol	100	07/12-08/16	**N13 B16 A**								
All engines				x 4, DELPHI, COIL ON PLUG						9.6375 C10		
316 Li [CHN]	Petrol	100	10/12->	**N13 B16 A**								
All engines				Qty: 4						9.6375 C10		
318 i	Petrol	100	07/15-06/19	**B38 B15 A**								
All engines				x 3, COIL ON PLUG						9.6532 C10		
320 i	Petrol	120	11/12->	**B48 B20 A, N20 B20 A, N20 B20 B**								
Eng. N20 B20 A, N20 B20 B				x 4, DELPHI, COIL ON PLUG						9.6375 C10		
Eng. N20 B20 B				Qty: 4						9.6375 C10		
Eng. B48 B20 A				x 4, COIL ON PLUG						9.6532 C10		
320 i	Petrol	125	11/12-06/16	**N13 B16 A**								
All engines				x 4, DELPHI, COIL ON PLUG						9.6375 C10		
320 i	Petrol	135	03/12->	**B48 B20 A, N20 B20 A, N20 B20 B**								
Eng. N20 B20 A, N20 B20 B				x 4, DELPHI, COIL ON PLUG						9.6375 C10		
Eng. B48 B20 A				x 4, COIL ON PLUG						9.6532 C10		

A10	CONDENSER	**A20**	CONTACT SET	**A40**	DISTRIBUTOR CAP	**A50**	ROTOR	**A70**	PICK-UP
C10	COIL	**C20**	IGNITION MODULE	**C30**	ELECTRONIC IGNITION KIT	**E01**	IGNITION CABLE SET		

The present application list is a brief version. For the detailed information about the possibility of installation on a specific vehicle, please refer to our web-catalogue http://catalogo.facet.eu/

Vehicle	alim.	kW	Date	Engine	FUNCTIONS ON THE VEHICLE A10	A20	A40	A50	A70	C10 - C30	C20	E01
320 i xDrive	Petrol	120	03/13->	B48 B20 A, N20 B20 A, N20 B20 B								
Eng. N20 B20 A, N20 B20 B	x 4, DELPHI, COIL ON PLUG									9.6375	C10	
Eng. N20 B20 B	Qty: 4									9.6375	C10	
Eng. B48 B20 A	x 4, COIL ON PLUG									9.6532	C10	
320 i xDrive	Petrol	135	07/12->	B48 B20 A, N20 B20 A, N20 B20 B								
Eng. N20 B20 A, N20 B20 B	x 4, DELPHI, COIL ON PLUG									9.6375	C10	
Eng. N20 B20 B	Qty: 4									9.6375	C10	
Eng. B48 B20 A	x 4, COIL ON PLUG									9.6532	C10	
320 Li [CHN]	Petrol	0	02/12->	--								
All engines	Qty: 4									9.6375	C10	
328 i	Petrol	180	11/11-10/18	N20 B20 A, N26 B20 A								
All engines	x 4, DELPHI, COIL ON PLUG									9.6375	C10	
Eng. N26 B20 A	Qty: 4									9.6375	C10	
328 i xDrive	Petrol	180	07/12-08/16	N20 B20 A, N26 B20 A								
Eng. N20 B20 A	x 4, DELPHI, COIL ON PLUG									9.6375	C10	
Eng. N26 B20 A	Qty: 4									9.6375	C10	
328 i xDrive [USA]	Petrol	0	10/11->	--								
All engines	Qty: 4									9.6375	C10	
328 Li [CHN]	Petrol	180	10/11->	N20 B20 A								
All engines	Qty: 4									9.6375	C10	
328 Li xDrive [CHN]	Petrol	0	10/11->	--								
All engines	Qty: 4									9.6375	C10	
328i	Petrol	160	11/11-06/15	N20 B20 A								
All engines	x 4, DELPHI, COIL ON PLUG									9.6375	C10	
330 e	Petrol/ Electric	135	11/15-10/18	B48 B20 A								
All engines	x 4, COIL ON PLUG									9.6532	C10	
330 e	Petrol/ Electric	185	11/15-10/18	B48 B20 A								
All engines	x 4, COIL ON PLUG									9.6532	C10	
330 i	Petrol	185	07/15->	B46 B20 B, B48 B20 B								
All engines	x 4, COIL ON PLUG									9.6532	C10	
330 i xDrive	Petrol	183	07/16->	B48 B20 B								
All engines	x 4, COIL ON PLUG									9.6532	C10	

A10	CONDENSER	A20	CONTACT SET	A40	DISTRIBUTOR CAP	A50	ROTOR	A70	PICK-UP
C10	COIL	C20	IGNITION MODULE	C30	ELECTRONIC IGNITION KIT	E01	IGNITION CABLE SET		

The present application list is a brief version. For the detailed information about the possibility of installation on a specific vehicle, please refer to our web-catalogue http://catalogo.facet.eu/

Vehicle	alim.	kW	Date	Engine	FUNCTIONS ON THE VEHICLE							
					A10	A20	A40	A50	A70	C10 - C30	C20	E01
330 i xDrive	Petrol	185	07/15->	ENGINE B48 B20 B								
Engine: All engines	Information: x 4, COIL ON PLUG									9.6532 C10		
335 i	Petrol	225	11/11-06/16	ENGINE N55 B30 A								
Engine: All engines	Information: x 6, DELPHI, COIL ON PLUG									9.6375 C10		
335 i	Petrol	240	11/11-03/14	ENGINE N55 B30 A								
Engine: All engines	Information: x 6, DELPHI, COIL ON PLUG									9.6375 C10		
335 i	Petrol	250	07/13-06/16	ENGINE N55 B30 A								
Engine: All engines	Information: x 6, DELPHI, COIL ON PLUG									9.6375 C10		
335 i xDrive	Petrol	225	07/12-06/16	ENGINE N55 B30 A								
Engine: All engines	Information: x 6, DELPHI, COIL ON PLUG									9.6375 C10		
335 i xDrive	Petrol	240	07/12-03/14	ENGINE N55 B30 A								
Engine: All engines	Information: x 6, DELPHI, COIL ON PLUG									9.6375 C10		
335 i xDrive	Petrol	250	07/13-06/16	ENGINE N55 B30 A								
Engine: All engines	Information: x 6, DELPHI, COIL ON PLUG									9.6375 C10		
340 i	Petrol	240	07/15->	ENGINE B58 B30 A								
Engine: All engines	Information: x 6, COIL ON PLUG									9.6532 C10		
340 i	Petrol	265	07/15->	ENGINE B58 B30 A								
Engine: All engines	Information: x 6, COIL ON PLUG									9.6532 C10		
340 i xDrive	Petrol	240	07/15->	ENGINE B58 B30 A								
Engine: All engines	Information: x 6, COIL ON PLUG									9.6532 C10		
340 i xDrive	Petrol	265	07/15->	ENGINE B58 B30 A								
Engine: All engines	Information: x 6, COIL ON PLUG									9.6532 C10		
ActiveHybrid	Petrol/ Electric	225	07/12-06/15	ENGINE N55 B30 A								
Engine: All engines	Information: x 6, DELPHI, COIL ON PLUG									9.6375 C10		
ActiveHybrid	Petrol/ Electric	250	07/12-06/15	ENGINE N55 B30 A								
Engine: All engines	Information: x 6, DELPHI, COIL ON PLUG									9.6375 C10		
M3	Petrol	317	03/14-10/18	ENGINE S55 B30 A								
Engine: All engines	Information: x 6, DELPHI, COIL ON PLUG									9.6375 C10		

A10	CONDENSER	**A20**	CONTACT SET	**A40**	DISTRIBUTOR CAP	**A50**	ROTOR	**A70**	PICK-UP
C10	COIL	**C20**	IGNITION MODULE	**C30**	ELECTRONIC IGNITION KIT	**E01**	IGNITION CABLE SET		

The present application list is a brief version. For the detailed information about the possibility of installation on a specific vehicle, please refer to our web-catalogue http://catalogo.facet.eu/

Vehicle	alim.	kW	Date	Engine	FUNCTIONS ON THE VEHICLE							
					A10	A20	A40	A50	A70	C10 - C30	C20	E01
M3 Competition	Petrol	331	03/16-10/18	**S55 B30 A**								
All engines	x 6, DELPHI, COIL ON PLUG									9.6375 C10		
M3 CS	Petrol	338	01/18-10/18	**S55 B30 A**								
All engines	x 6, DELPHI, COIL ON PLUG									9.6375 C10		
3 VII												
318 i	Petrol	115	03/20->	**B48 B20 A**								
All engines	x 4, COIL ON PLUG									9.6532 C10		
320 e Plug-in-Hybrid	Petrol/ Electric	120	07/20->	**B48 B20 A**								
All engines	x 4, COIL ON PLUG									9.6532 C10		
320 e Plug-in-Hybrid	Petrol/ Electric	150	07/20->	**B48 B20 A**								
All engines	x 4, COIL ON PLUG									9.6532 C10		
320 e Plug-in-Hybrid xDrive	Petrol/ Electric	120	03/21->	**B48 B20 A**								
All engines	x 4, COIL ON PLUG									9.6532 C10		
320 e Plug-in-Hybrid xDrive	Petrol/ Electric	150	03/21->	**B48 B20 A**								
All engines	x 4, COIL ON PLUG									9.6532 C10		
320 i	Petrol	135	03/19->	**B46 B20 B, B48 B20 A, B48 B20 B**								
All engines	x 4, COIL ON PLUG									9.6532 C10		
320 i 1.6	Petrol	125	03/19->	**B48 B16 A**								
All engines	x 4, COIL ON PLUG									9.6532 C10		
320 i xDrive	Petrol	135	07/19->	**B48 B20 A**								
All engines	x 4, COIL ON PLUG									9.6532 C10		
330 e Plug-in-Hybrid	Petrol/ Electric	135	07/19->	**B46 B20 B, B48 B20 A**								
All engines	x 4, COIL ON PLUG									9.6532 C10		
330 e Plug-in-Hybrid	Petrol/ Electric	185	07/19-02/20	**B46 B20 B, B48 B20 A**								
All engines	x 4, COIL ON PLUG									9.6532 C10		
330 e Plug-in-Hybrid	Petrol/ Electric	215	03/20->	**B46 B20 B, B48 B20 A**								
All engines	x 4, COIL ON PLUG									9.6532 C10		

A10	CONDENSER	**A20**	CONTACT SET	**A40**	DISTRIBUTOR CAP	**A50**	ROTOR	**A70**	PICK-UP
C10	COIL	**C20**	IGNITION MODULE	**C30**	ELECTRONIC IGNITION KIT	**E01**	IGNITION CABLE SET		

The present application list is a brief version. For the detailed information about the possibility of installation on a specific vehicle, please refer to our web-catalogue http://catalogo.facet.eu/

Vehicle	alim.	kW	Date	Engine	FUNCTIONS ON THE VEHICLE							
					A10	A20	A40	A50	A70	C10 - C30	C20	E01
330 e Plug-in-Hybrid xDrive	Petrol/ Electric	135	07/20->	**ENGINE** B48 B20 A								

Engine	Information	A10	A20	A40	A50	A70	C10 - C30		C20	E01
All engines	x 4, COIL ON PLUG						9.6532	C10		

330 e Plug-in-Hybrid xDrive	Petrol/ Electric	215	07/20->	**ENGINE** B48 B20 A

Engine	Information	A10	A20	A40	A50	A70	C10 - C30		C20	E01
All engines	x 4, COIL ON PLUG						9.6532	C10		

330 i	Petrol	190	11/18->	**ENGINE** B48 B20 B

Engine	Information	A10	A20	A40	A50	A70	C10 - C30		C20	E01
All engines	x 4, COIL ON PLUG						9.6532	C10		

330 i xDrive	Petrol	190	11/18->	**ENGINE** B46 B20 B, B48 B20 B

Engine	Information	A10	A20	A40	A50	A70	C10 - C30		C20	E01
All engines	x 4, COIL ON PLUG						9.6532	C10		

M 340 i Mild-Hybrid xDrive	Petrol/ Electric	275	11/20->	**ENGINE** B58 B30 B

Engine	Information	A10	A20	A40	A50	A70	C10 - C30		C20	E01
All engines	x 6, COIL ON PLUG						9.6532	C10		

M 340 i xDrive	Petrol	275	07/19->	**ENGINE** B58 B30 B

Engine	Information	A10	A20	A40	A50	A70	C10 - C30		C20	E01
All engines	x 6, COIL ON PLUG						9.6532	C10		

M 340 i xDrive	Petrol	285	03/19->	**ENGINE** B58 B30 B

Engine	Information	A10	A20	A40	A50	A70	C10 - C30		C20	E01
All engines	x 6, COIL ON PLUG						9.6532	C10		

M3	Petrol	353	11/20->	**ENGINE** S58B30B

Engine	Information	A10	A20	A40	A50	A70	C10 - C30		C20	E01
All engines	x 6, COIL ON PLUG						9.6532	C10		

M3 Competition	Petrol	375	11/20->	**ENGINE** S58 B30 A

Engine	Information	A10	A20	A40	A50	A70	C10 - C30		C20	E01
All engines	x 6, COIL ON PLUG						9.6532	C10		

M3 Competition xDrive	Petrol	375	05/21->	**ENGINE** S58 B30 A

Engine	Information	A10	A20	A40	A50	A70	C10 - C30		C20	E01
All engines	x 6, COIL ON PLUG						9.6532	C10		

4

418 i	Petrol	100	07/15->	**ENGINE** B38 B15 A

Engine	Information	A10	A20	A40	A50	A70	C10 - C30		C20	E01
All engines	x 3, COIL ON PLUG						9.6532	C10		

420 i	Petrol	120	11/13->	**ENGINE** B48 B20 A, N20 B20 A, N20 B20 B

Engine	Information	A10	A20	A40	A50	A70	C10 - C30		C20	E01
Eng. N20 B20 A, N20 B20 B	x 4, DELPHI, COIL ON PLUG						9.6375	C10		
Eng. B48 B20 A	x 4, COIL ON PLUG						9.6532	C10		

420 i	Petrol	135	11/13->	**ENGINE** B46 B20 B, B48 B20 A, N20 B20 A, N20 B20 B

Engine	Information	A10	A20	A40	A50	A70	C10 - C30		C20	E01
Eng. N20 B20 A, N20 B20 B	x 4, DELPHI, COIL ON PLUG						9.6375	C10		
Eng. B46 B20 B, B48 B20 A	x 4, COIL ON PLUG						9.6532	C10		

A10	CONDENSER	**A20**	CONTACT SET	**A40**	DISTRIBUTOR CAP	**A50**	ROTOR	**A70**	PICK-UP
C10	COIL	**C20**	IGNITION MODULE	**C30**	ELECTRONIC IGNITION KIT	**E01**	IGNITION CABLE SET		

The present application list is a brief version. For the detailed information about the possibility of installation on a specific vehicle, please refer to our web-catalogue http://catalogo.facet.eu/

Vehicle	alim.	kW	Date	Engine	FUNCTIONS ON THE VEHICLE							
					A10	A20	A40	A50	A70	C10 - C30	C20	E01
420 i 1.6	Petrol	**125**	11/20->	ENGINE **B48 B16 A**								

Engine	Information	A10	A20	A40	A50	A70	C10 - C30		C20	E01
All engines	x 4, COIL ON PLUG						9.6532	C10		

420 i xDrive	Petrol	**120**	11/13->	ENGINE **B48 B20 A, N20 B20 A, N20 B20 B**

Engine	Information	A10	A20	A40	A50	A70	C10 - C30		C20	E01
Eng. N20 B20 A	Qty: 4						9.6375	C10		
Eng. N20 B20 B	x 4, DELPHI, COIL ON PLUG						9.6375	C10		
Eng. B48 B20 A	x 4, COIL ON PLUG						9.6532	C10		

420 i xDrive	Petrol	**135**	11/13->	ENGINE **B48 B20 A, N20 B20 A, N20 B20 B**

Engine	Information	A10	A20	A40	A50	A70	C10 - C30		C20	E01
Eng. N20 B20 A	Qty: 4						9.6375	C10		
Eng. N20 B20 B	x 4, DELPHI, COIL ON PLUG						9.6375	C10		
Eng. B48 B20 A	x 4, COIL ON PLUG						9.6532	C10		

428 i	Petrol	**180**	07/13-02/17	ENGINE **N20 B20 A, N26 B20 A**

Engine	Information	A10	A20	A40	A50	A70	C10 - C30		C20	E01
All engines	x 4, DELPHI, COIL ON PLUG						9.6375	C10		
Eng. N26 B20 A	Qty: 4						9.6375	C10		

428 i xDrive	Petrol	**180**	07/13-02/16	ENGINE **N20 B20 A, N26 B20 A**

Engine	Information	A10	A20	A40	A50	A70	C10 - C30		C20	E01
Eng. N20 B20 A	x 4, DELPHI, COIL ON PLUG						9.6375	C10		
Eng. N26 B20 A	Qty: 4						9.6375	C10		

430 i	Petrol	**180**	07/21->	ENGINE **B46 B20 B, B48 B20 B**

Engine	Information	A10	A20	A40	A50	A70	C10 - C30		C20	E01
All engines	x 4, COIL ON PLUG						9.6532	C10		

430 i	Petrol	**183**	03/16->	ENGINE **B48 B20 B**

Engine	Information	A10	A20	A40	A50	A70	C10 - C30		C20	E01
All engines	x 4, COIL ON PLUG						9.6532	C10		

430 i	Petrol	**185**	03/16->	ENGINE **B46 B20 B, B48 B20 B**

Engine	Information	A10	A20	A40	A50	A70	C10 - C30		C20	E01
All engines	x 4, COIL ON PLUG						9.6532	C10		

430 i	Petrol	**190**	07/20->	ENGINE **B46 B20 B, B48 B20 B**

Engine	Information	A10	A20	A40	A50	A70	C10 - C30		C20	E01
All engines	x 4, COIL ON PLUG						9.6532	C10		

430 i xDrive	Petrol	**180**	07/21->	ENGINE **B48 B20 B**

Engine	Information	A10	A20	A40	A50	A70	C10 - C30		C20	E01
All engines	x 4, COIL ON PLUG						9.6532	C10		

430 i xDrive	Petrol	**183**	03/16->	ENGINE **B48 B20 B**

Engine	Information	A10	A20	A40	A50	A70	C10 - C30		C20	E01
All engines	x 4, COIL ON PLUG						9.6532	C10		

430 i xDrive	Petrol	**185**	03/16->	ENGINE **B48 B20 B**

Engine	Information	A10	A20	A40	A50	A70	C10 - C30		C20	E01
All engines	x 4, COIL ON PLUG						9.6532	C10		

430 i xDrive	Petrol	**190**	07/21->	ENGINE **B48 B20 B**

Engine	Information	A10	A20	A40	A50	A70	C10 - C30		C20	E01
All engines	x 4, COIL ON PLUG						9.6532	C10		

A10	CONDENSER	**A20**	CONTACT SET	**A40**	DISTRIBUTOR CAP	**A50**	ROTOR	**A70**	PICK-UP
C10	COIL	**C20**	IGNITION MODULE	**C30**	ELECTRONIC IGNITION KIT	**E01**	IGNITION CABLE SET		

The present application list is a brief version. For the detailed information about the possibility of installation on a specific vehicle, please refer to our web-catalogue http://catalogo.facet.eu/

Vehicle	alim.	kW	Date	Engine	FUNCTIONS ON THE VEHICLE							
					A10	A20	A40	A50	A70	C10 - C30	C20	E01
435 i	Petrol	225	07/13-02/16	**ENGINE** N55 B30 A								
Engine: All engines	Information: x 6, DELPHI, COIL ON PLUG									9.6375 C10		
435 i	Petrol	250	07/13-02/16	**ENGINE** N55 B30 A								
Engine: All engines	Information: x 6, DELPHI, COIL ON PLUG									9.6375 C10		
435 i xDrive	Petrol	225	07/13-02/16	**ENGINE** N55 B30 A								
Engine: All engines	Information: x 6, DELPHI, COIL ON PLUG									9.6375 C10		
435 i xDrive	Petrol	250	07/13-02/16	**ENGINE** N55 B30 A								
Engine: All engines	Information: x 6, DELPHI, COIL ON PLUG									9.6375 C10		
440 i	Petrol	240	03/16->	**ENGINE** B58 B30 A								
Engine: All engines	Information: x 6, COIL ON PLUG									9.6532 C10		
440 i	Petrol	265	03/16->	**ENGINE** B58 B30 A								
Engine: All engines	Information: x 6, COIL ON PLUG									9.6532 C10		
440 i xDrive	Petrol	240	03/16->	**ENGINE** B58 B30 A								
Engine: All engines	Information: x 6, COIL ON PLUG									9.6532 C10		
440 i xDrive	Petrol	265	03/16->	**ENGINE** B58 B30 A								
Engine: All engines	Information: x 6, COIL ON PLUG									9.6532 C10		
M 440 i Mild-Hybrid	Petrol/ Electric	275	07/21->	**ENGINE** B58 B30 B								
Engine: All engines	Information: x 6, COIL ON PLUG									9.6532 C10		
M 440 i Mild-Hybrid xDrive	Petrol/ Electric	275	11/20->	**ENGINE** B58 B30 B								
Engine: All engines	Information: x 6, COIL ON PLUG									9.6532 C10		
M 440 i Mild-Hybrid xDrive	Petrol/ Electric	285	07/20->	**ENGINE** B58 B30 B								
Engine: All engines	Information: x 6, COIL ON PLUG									9.6532 C10		
M4	Petrol	317	03/14->	**ENGINE** S55 B30 A								
Engine: All engines	Information: x 6, DELPHI, COIL ON PLUG									9.6375 C10		
M4	Petrol	353	11/20->	**ENGINE** S58B30B								
Engine: All engines	Information: x 6, COIL ON PLUG									9.6532 C10		
M4 Competition	Petrol	331	03/16->	**ENGINE** S55 B30 A								
Engine: All engines	Information: x 6, DELPHI, COIL ON PLUG									9.6375 C10		

A10	CONDENSER	**A20**	CONTACT SET	**A40**	DISTRIBUTOR CAP	**A50**	ROTOR	**A70**	PICK-UP
C10	COIL	**C20**	IGNITION MODULE	**C30**	ELECTRONIC IGNITION KIT	**E01**	IGNITION CABLE SET		

The present application list is a brief version. For the detailed information about the possibility of installation on a specific vehicle, please refer to our web-catalogue http://catalogo.facet.eu/

Vehicle	alim.	kW	Date	Engine	FUNCTIONS ON THE VEHICLE A10	A20	A40	A50	A70	C10 - C30	C20	E01
M4 Competition	Petrol	375	11/20->	**S58 B30 A**								
Engine: All engines — Information: x 6, COIL ON PLUG										9.6532 C10		
M4 Competition M xDrive	Petrol	375	07/21->	**S58 B30 A**								
Engine: All engines — Information: x 6, COIL ON PLUG										9.6532 C10		
M4 CS	Petrol	338	07/17-06/19	**S55 B30 A**								
Engine: All engines — Information: x 6, DELPHI, COIL ON PLUG										9.6375 C10		
M4 GTS	Petrol	368	03/16-02/17	**S55 B30 A**								
Engine: All engines — Information: x 6, DELPHI, COIL ON PLUG										9.6375 C10		
4 SERIES												
M440i xDrive Coupe Mild-Hybrid	Petrol/ Electric	275	11/20->	**B58 B30 B**								
Engine: All engines — Information: x 6, COIL ON PLUG										9.6532 C10		
5 I												
518	Petrol	66	07/74-05/81	**M10 B18 (184VB)**								
Engine: All engines — Information:							2.7462				9.4005	4.8572
Engine: All engines — Information: version Bosch							2.7494PHT	3.7573/15RS				
5 II												
518	Petrol	66	06/81-09/84	**M10 B18 (184VC), M10 B18 (184VD)**								
Engine: All engines — Information: version Bosch							2.7494PHT	3.7573/15RS				
Engine: All engines — Information: ->year 30/09/83											9.4005	
Engine: All engines — Information: without marten protection												4.8572
518 i	Petrol	75	05/81-12/87	**M10 B18 (184EB)**								
Engine: All engines — Information: version Bosch							2.7494PHT	3.7555RS, 3.7573/15RS				
Engine: All engines — Information: without marten protection												4.8572
518 i	Petrol	77	05/81-12/87	**M10 B18 (184EB)**								
Engine: All engines — Information: version Bosch							2.7494PHT	3.7555RS, 3.7573/15RS				
Engine: All engines — Information: without marten protection												4.8572
520 i	Petrol	110	12/86-12/87	**M20 B20 (206KA)**								
Engine: All engines — Information: version Bosch							2.7530/8PHT	3.7573/19RS				
Engine: All engines — Information: ->year 30/09/83											9.4005	
520 i	Petrol	92	06/81-12/87	**M20 B20 (206EA)**								
Engine: All engines — Information: version Bosch							2.7521PHT	3.7560RS, 3.7573/12RS				
Engine: All engines — Information: ->year 30/09/83											9.4005	
520 i	Petrol	95	08/85-12/87	**M20 B20 (206KA)**								
Engine: All engines — Information: version Bosch							2.7530/8PHT	3.7573/19RS				

A10	CONDENSER	**A20**	CONTACT SET	**A40**	DISTRIBUTOR CAP	**A50**	ROTOR	**A70**	PICK-UP
C10	COIL	**C20**	IGNITION MODULE	**C30**	ELECTRONIC IGNITION KIT	**E01**	IGNITION CABLE SET		

The present application list is a brief version. For the detailed information about the possibility of installation on a specific vehicle, please refer to our web-catalogue http://catalogo.facet.eu/

Vehicle	alim.	kW	Date	Engine	FUNCTIONS ON THE VEHICLE A10	A20	A40	A50	A70	C10 - C30	C20	E01
520 i	Petrol	95	08/85-12/87	M20 B20 (206KA)								
Engine: All engines — Information: ->year 30/09/83											9.4005	
525 e	Petrol	90	09/81-12/87	M20 B27 (276EB), M20 B27 (276KA), M20 B27 (276KB)								
Engine: All engines — Information: version Bosch							2.7530/8PHT	3.7573/19RS				
525 e	Petrol	92	03/83-12/87	M20 B27 (276EA)								
Engine: All engines — Information: version Bosch							2.7530/8PHT	3.7573/19RS				
525 e	Petrol	95	09/85-12/87	M20 B27 (276KB)								
Engine: All engines — Information: version Bosch							2.7530/8PHT	3.7573/19RS				
525 i	Petrol	110	06/81-12/87	M30 B25 (256EA)								
Engine: All engines — Information: version Bosch							2.7481PHT	3.7560RS, 3.7573/12RS				
Engine: All engines — Information:											9.4005	
528 i	Petrol	135	06/81-12/87	M30 B28 (286EA)								
Engine: All engines — Information: version Bosch							2.7481PHT	3.7560RS, 3.7573/12RS				
Engine: All engines — Information:											9.4005	
528 i [USA]	Petrol	0	01/81-12/87	--								
Engine: All engines — Information: 01/01/85 ->, version Bosch							2.7530/8PHT	3.7573/19RS				
Engine: All engines — Information:											9.4005	
530 i	Petrol	0	01/84-12/88	--								
Engine: All engines — Information: version Bosch							2.7530/8PHT	3.7573/19RS				
Engine: All engines — Information:										9.6012 C10		4.8578
535 i	Petrol	162	01/85-12/87	M30 B34 (346EC)								
Engine: All engines — Information: version Bosch							2.7530/8PHT	3.7573/19RS				
535 i, M 535 i	Petrol	136	01/85-12/87	M30 B34 (346KA)								
Engine: All engines — Information: version Bosch							2.7530/8PHT	3.7573/19RS				
535 i, M 535 i	Petrol	141	01/85-12/87	M30 B35 (Motronic)								
Engine: All engines — Information: version Bosch							2.7530/8PHT	3.7573/19RS				
M5	Petrol	210	08/85-12/87	S38 B35 (356ED)								
Engine: All engines — Information: version Bosch							2.7530/8PHT	3.7573/19RS				
5 III												
518 i	Petrol	83	09/89-04/94	M40 B18 (184E1), M43 B18 (184E2)								
Engine: All engines — Information: version Bosch							2.7530/17PHT	3.7573/19RS				

A10	CONDENSER	A20	CONTACT SET	A40	DISTRIBUTOR CAP	A50	ROTOR	A70	PICK-UP
C10	COIL	C20	IGNITION MODULE	C30	ELECTRONIC IGNITION KIT	E01	IGNITION CABLE SET		

The present application list is a brief version. For the detailed information about the possibility of installation on a specific vehicle, please refer to our web-catalogue http://catalogo.facet.eu/

Vehicle	alim.	kW	Date	Engine	FUNCTIONS ON THE VEHICLE							
					A10	A20	A40	A50	A70	C10 - C30	C20	E01
520 i	Petrol	110	07/91-07/96	ENGINE M50 B20 (206S1), M50 B20 (206S2)								
All engines	without spark plug connector, Qty: 6									9.6062S C10		
All engines	incl. spark plug connector, Qty: 6									9.6312 C10		
520 i	Petrol	95	06/87-09/90	ENGINE M20 B20 (206KA)								
All engines	version Bosch						2.7530/8PHT	3.7573/19RS				
All engines	01/10/88 ->, without marten protection											4.8597
520 i 24V	Petrol	110	04/90-08/95	ENGINE M50 B20 (206S1), M50 B20 (206S2)								
All engines	without spark plug connector, Qty: 6									9.6062S C10		
All engines	incl. spark plug connector, Qty: 6									9.6312 C10		
525 i	Petrol	125	02/88-08/90	ENGINE M20 B25 (256K1)								
All engines	version Bosch						2.7530/8PHT	3.7573/19RS				
All engines	01/10/88 ->, without marten protection											4.8597
525 i	Petrol	141	07/91-07/96	ENGINE M50 B25 (256S1), M50 B25 (256S2)								
All engines	without spark plug connector, Qty: 6									9.6062S C10		
All engines	incl. spark plug connector, Qty: 6									9.6312 C10		
525 i 24V	Petrol	141	03/90-08/95	ENGINE M50 B25 (256S2)								
All engines	without spark plug connector, Qty: 6									9.6062S C10		
All engines	incl. spark plug connector, Qty: 6									9.6312 C10		
525 ix	Petrol	141	01/92-03/96	ENGINE M50 B25 (256S1)								
All engines	without spark plug connector, Qty: 6									9.6062S C10		
All engines	incl. spark plug connector, Qty: 6									9.6312 C10		
525 iX 24V	Petrol	141	10/91-08/95	ENGINE M50 B25 (256S1), M50 B25 (256S2)								
All engines	without spark plug connector, Qty: 6									9.6062S C10		
All engines	incl. spark plug connector, Qty: 6									9.6312 C10		
530 i	Petrol	138	01/88-04/90	ENGINE M30 B30 (306KA)								
All engines	version Bosch						2.7530/8PHT	3.7573/19RS				
All engines	->year 31/10/88											4.8578
530 i	Petrol	160	09/92-07/96	ENGINE M60 B30 (308S1)								
All engines	without spark plug connector, Qty: 8									9.6062S C10		
All engines	incl. spark plug connector, Qty: 8									9.6312 C10		
530 i V8	Petrol	160	09/92-12/95	ENGINE M60 B30 (308S1)								
All engines	without spark plug connector, Qty: 8									9.6062S C10		
All engines	incl. spark plug connector, Qty: 8									9.6312 C10		

A10	CONDENSER	**A20**	CONTACT SET	**A40**	DISTRIBUTOR CAP	**A50**	ROTOR	**A70**	PICK-UP
C10	COIL	**C20**	IGNITION MODULE	**C30**	ELECTRONIC IGNITION KIT	**E01**	IGNITION CABLE SET		

The present application list is a brief version. For the detailed information about the possibility of installation on a specific vehicle, please refer to our web-catalogue http://catalogo.facet.eu/

Vehicle	alim.	kW	Date	Engine	FUNCTIONS ON THE VEHICLE: A10	A20	A40	A50	A70	C10 - C30	C20	E01
535 i	Petrol	155	11/87-02/93	**M30 B34 (346KB)**								
All engines	version Bosch						2.7530/8PHT	3.7573/19RS				
All engines	->year 31/10/88											4.8578
540 i	Petrol	210	09/93-07/96	**M60 B40 (408S1)**								
All engines	without spark plug connector, Qty: 8									9.6062S C10		
All engines	incl. spark plug connector, Qty: 8									9.6312 C10		
540 i V8	Petrol	210	09/92-12/95	**M60 B40 (408S1)**								
All engines	without spark plug connector, Qty: 8									9.6062S C10		
All engines	incl. spark plug connector, Qty: 8									9.6312 C10		
M5	Petrol	232	09/88-03/92	**S38 B36 (366S1)**								
All engines	version Bosch						2.7530/8PHT	3.7573/19RS				
All engines										9.6012 C10		
M5	Petrol	250	01/92-07/95	**S38 B38 (386S1)**								
All engines	without spark plug connector, Qty: 6									9.6062S C10		
M5 Cat	Petrol	232	09/88-03/92	**S38 B36 (366S1)**								
All engines	version Bosch						2.7530/8PHT	3.7573/19RS				
All engines										9.6012 C10		
5 IV												
520 i	Petrol	100	01/96-06/03	**6BJT, 8TJ376QE, M52B206S3, M52B206S4**								
All engines	x 6, BOSCH, BREMI, COIL ON PLUG, incl. spark plug connector									9.6252 C10		
520 i	Petrol	110	01/96-06/03	**6BJT, 8TJ376QE, M52B206S3, M52B206S4**								
All engines	x 6, BOSCH, BREMI, COIL ON PLUG, incl. spark plug connector									9.6252 C10		
520 i	Petrol	120	09/00-12/03	**M54 B22 (226S1), M54B226S1**								
Eng. M54 B22 (226S1)	->year 30/09/02, without spark plug connector, Qty: 6									9.6252 C10		
Eng. M54B226S1	->year 01/08/02, x 6, BREMI, COIL ON PLUG									9.6252 C10		
Eng. M54 B22 (226S1)	->year 30/09/02, incl. spark plug connector, Qty: 6									9.6313 C10		
Eng. M54 B22 (226S1)	01/10/02 ->, Qty: 6									9.6375 C10		
Eng. M54B226S1	01/09/02 ->, x 6, DELPHI, COIL ON PLUG									9.6375 C10		
520 i	Petrol	125	09/00-12/03	**M54 B22 (226S1), M54B226S1**								
Eng. M54 B22 (226S1)	->year 30/09/02, without spark plug connector, Qty: 6									9.6252 C10		
Eng. M54B226S1	->year 01/09/02, x 6, BREMI, x 6, BOSCH, COIL ON PLUG, COIL ON PLUG, incl. spark plug connector									9.6252 C10		
Eng. M54 B22 (226S1)	->year 30/09/02, incl. spark plug connector, Qty: 6									9.6313 C10		
Eng. M54 B22 (226S1)	01/10/02 ->, Qty: 6									9.6375 C10		
Eng. M54B226S1	01/09/02 ->, x 6, DELPHI, COIL ON PLUG									9.6375 C10		

A10	CONDENSER	A20	CONTACT SET	A40	DISTRIBUTOR CAP	A50	ROTOR	A70	PICK-UP
C10	COIL	C20	IGNITION MODULE	C30	ELECTRONIC IGNITION KIT	E01	IGNITION CABLE SET		

The present application list is a brief version. For the detailed information about the possibility of installation on a specific vehicle, please refer to our web-catalogue http://catalogo.facet.eu/

Vehicle	alim.	kW	Date	Engine	FUNCTIONS ON THE VEHICLE: A10	A20	A40	A50	A70	C10 - C30	C20	E01
523 i	Petrol	120	09/98-08/00	8K7M 818								

Engine	Information	A10	A20	A40	A50	A70	C10 - C30		C20	E01
All engines	x 6, BREMI, COIL ON PLUG						9.6252	C10		

Vehicle	alim.	kW	Date	Engine
523 i	Petrol	125	09/95-08/00	1LD5, 4M18A, 6GW491Q-E, M52 B25 (256S3), M52B256S3

Engine	Information	A10	A20	A40	A50	A70	C10 - C30		C20	E01
Eng. 1LD5, 4M18A, 6GW491Q-E, M52B256S3	x 6, BOSCH, BREMI, COIL ON PLUG, incl. spark plug connector						9.6252	C10		
Eng. M52 B25 (256S3)	without spark plug connector, Qty: 6						9.6252	C10		
Eng. M52 B25 (256S3)	incl. spark plug connector, Qty: 6						9.6313	C10		

Vehicle	alim.	kW	Date	Engine
525 i	Petrol	141	09/00-05/04	8CUG, M54 B25 (256S5), M54B256S5

Engine	Information	A10	A20	A40	A50	A70	C10 - C30		C20	E01
Eng. 8CUG, M54B256S5	->year 01/09/02, x 6, BREMI, x 6, BOSCH, COIL ON PLUG, COIL ON PLUG, incl. spark plug connector						9.6252	C10		
Eng. M54 B25 (256S5)	->year 30/09/02, without spark plug connector, Qty: 6						9.6252	C10		
Eng. M54 B25 (256S5)	->year 30/09/02, incl. spark plug connector, Qty: 6						9.6313	C10		
Eng. 8CUG, M54B256S5	01/10/02 ->, x 6, DELPHI, COIL ON PLUG						9.6375	C10		
Eng. M54 B25 (256S5)	01/10/02 ->, Qty: 6						9.6375	C10		

Vehicle	alim.	kW	Date	Engine
528 i	Petrol	142	09/95-08/00	9D 0836 LE 501, M52 B28 (286S1), M52 B28 (286S2), M52B286S1, M52B286S2

Engine	Information	A10	A20	A40	A50	A70	C10 - C30		C20	E01
Eng. 9D 0836 LE 501, M52B286S1, M52B286S2	x 6, BOSCH, BREMI, COIL ON PLUG, incl. spark plug connector						9.6252	C10		
Eng. M52 B28 (286S1), M52 B28 (286S2)	without spark plug connector, Qty: 6						9.6252	C10		
Eng. M52 B28 (286S1), M52 B28 (286S2)	incl. spark plug connector, Qty: 6						9.6313	C10		

Vehicle	alim.	kW	Date	Engine
530 i	Petrol	170	09/00-12/03	2CBL, M54 B30 (306S3), M54B306S3

Engine	Information	A10	A20	A40	A50	A70	C10 - C30		C20	E01
Eng. 2CBL, M54B306S3	->year 01/09/02, x 6, BREMI, x 6, BOSCH, COIL ON PLUG, COIL ON PLUG, incl. spark plug connector						9.6252	C10		
Eng. M54 B30 (306S3)	->year 30/09/02, without spark plug connector, Qty: 6						9.6252	C10		
Eng. M54 B30 (306S3)	->year 30/09/02, incl. spark plug connector, Qty: 6						9.6313	C10		
Eng. 2CBL, M54B306S3	01/10/02 ->, x 6, DELPHI, COIL ON PLUG						9.6375	C10		
Eng. M54 B30 (306S3)	01/10/02 ->, Qty: 6						9.6375	C10		

Vehicle	alim.	kW	Date	Engine
535 i	Petrol	173	06/96-08/98	1H4B 410, M62 B35 (358S2)

Engine	Information	A10	A20	A40	A50	A70	C10 - C30		C20	E01
Eng. 1H4B 410	x 8, BOSCH, BREMI, COIL ON PLUG, incl. spark plug connector						9.6252	C10		
Eng. M62 B35 (358S2)	without spark plug connector, Qty: 8						9.6252	C10		
Eng. M62 B35 (358S2)	incl. spark plug connector, Qty: 8						9.6313	C10		

Vehicle	alim.	kW	Date	Engine
535 i	Petrol	180	09/98-06/03	6DAM15B

Engine	Information	A10	A20	A40	A50	A70	C10 - C30		C20	E01
All engines	x 8, BOSCH, BREMI, COIL ON PLUG, incl. spark plug connector						9.6252	C10		

Vehicle	alim.	kW	Date	Engine
540 i	Petrol	210	03/96-12/03	0JL465QH, 54A91S, 9K20C3, M62 B44 (448S1), M62 B44 (448S2), M62B448S2

Engine	Information	A10	A20	A40	A50	A70	C10 - C30		C20	E01
Eng. 0JL465QH, 54A91S, 9K20C3, M62B448S2	x 8, BOSCH, BREMI, COIL ON PLUG, incl. spark plug connector						9.6252	C10		
Eng. M62 B44 (448S1), M62 B44 (448S2)	without spark plug connector, Qty: 8						9.6252	C10		
Eng. M62 B44 (448S1), M62 B44 (448S2)	incl. spark plug connector, Qty: 8						9.6313	C10		

A10	CONDENSER	A20	CONTACT SET	A40	DISTRIBUTOR CAP	A50	ROTOR	A70	PICK-UP
C10	COIL	C20	IGNITION MODULE	C30	ELECTRONIC IGNITION KIT	E01	IGNITION CABLE SET		

The present application list is a brief version. For the detailed information about the possibility of installation on a specific vehicle, please refer to our web-catalogue http://catalogo.facet.eu/

Vehicle	alim.	kW	Date	Engine	FUNCTIONS ON THE VEHICLE A10	A20	A40	A50	A70	C10 - C30	C20	E01
M5	Petrol	294	10/98-06/03	ENGINE 8D 0836 LF 40, S62 B50 (508S1)								

Engine	Information	A10	A20	A40	A50	A70	C10 - C30		C20	E01
Eng. 8D 0836 LF 40	x 8, BOSCH, BREMI, COIL ON PLUG, incl. spark plug connector						9.6252	C10		
Eng. S62 B50 (508S1)	without spark plug connector, Qty: 8						9.6252	C10		
Eng. S62 B50 (508S1)	incl. spark plug connector, Qty: 8						9.6313	C10		

5 V

520 i	Petrol	115	09/07-02/10	ENGINE N46 B20 B

Engine	Information	A10	A20	A40	A50	A70	C10 - C30		C20	E01
All engines	x 4, DELPHI, COIL ON PLUG						9.6375	C10		

520 i	Petrol	120	12/06-08/10	ENGINE N43 B20 A

Engine	Information	A10	A20	A40	A50	A70	C10 - C30		C20	E01
All engines	x 4, BOSCH, COIL ON PLUG						9.6507	C10		

520 i	Petrol	125	07/03->	ENGINE M54 226 S1, M54 B22 (226S1), M54B226S1, N43 B20 A

Engine	Information	A10	A20	A40	A50	A70	C10 - C30		C20	E01
Eng. M54 226 S1, M54 B22 (226S1)	Qty: 6						9.6375	C10		
Eng. M54B226S1	x 6, DELPHI, COIL ON PLUG						9.6375	C10		
Eng. N43 B20 A	x 4, BOSCH, COIL ON PLUG						9.6507	C10		

520Li	Petrol	115	09/07->	ENGINE N46 B20 B, N46 B20 C

Engine	Information	A10	A20	A40	A50	A70	C10 - C30		C20	E01
All engines	Qty: 4						9.6375	C10		

523 i	Petrol	0	07/05->	ENGINE N52B25B

Engine	Information	A10	A20	A40	A50	A70	C10 - C30		C20	E01
All engines	Qty: 6						9.6375	C10		

523 i	Petrol	130	10/04->	ENGINE N52 B25 A, N52 B25 B, N52 B25 BE, N52 B25 BF, N52B25B

Engine	Information	A10	A20	A40	A50	A70	C10 - C30		C20	E01
Eng. N52 B25 A, N52 B25 B, N52 B25 BE	x 6, BOSCH, DELPHI, COIL ON PLUG						9.6375	C10		
Eng. N52 B25 BF, N52B25B	Qty: 6						9.6375	C10		

523 i	Petrol	140	01/07-12/10	ENGINE N52 B25 A, N52 B25 BE, N53 B25 A

Engine	Information	A10	A20	A40	A50	A70	C10 - C30		C20	E01
Eng. N52 B25 A, N52 B25 BE	x 6, DELPHI, COIL ON PLUG						9.6375	C10		
Eng. N53 B25 A	x 6, BOSCH, COIL ON PLUG						9.6507	C10		

523Li	Petrol	130	07/05->	ENGINE N52 B25 A, N52B25B, N52B25BE

Engine	Information	A10	A20	A40	A50	A70	C10 - C30		C20	E01
All engines	Qty: 6						9.6375	C10		

525 i	Petrol	141	09/03-12/10	ENGINE M54 B25 (256S5), M54B256S5

Engine	Information	A10	A20	A40	A50	A70	C10 - C30		C20	E01
Eng. M54 B25 (256S5)	Qty: 6						9.6375	C10		
Eng. M54B256S5	x 6, DELPHI, COIL ON PLUG						9.6375	C10		

525 i	Petrol	155	03/05-12/10	ENGINE N52 B25 A, N53 B30 A

Engine	Information	A10	A20	A40	A50	A70	C10 - C30		C20	E01
Eng. N52 B25 A	x 6, DELPHI, x 6, BOSCH, COIL ON PLUG, DELPHI, COIL ON PLUG ---------- x 6, DELPHI, COIL ON PLUG						9.6375	C10		
Eng. N53 B30 A	x 6, BOSCH, COIL ON PLUG						9.6507	C10		

A10	CONDENSER	A20	CONTACT SET	A40	DISTRIBUTOR CAP	A50	ROTOR	A70	PICK-UP
C10	COIL	C20	IGNITION MODULE	C30	ELECTRONIC IGNITION KIT	E01	IGNITION CABLE SET		

The present application list is a brief version. For the detailed information about the possibility of installation on a specific vehicle, please refer to our web-catalogue http://catalogo.facet.eu/

Vehicle	alim.	kW	Date	Engine	FUNCTIONS ON THE VEHICLE A10	A20	A40	A50	A70	C10 - C30	C20	E01
525 i	Petrol	160	03/05->	N52 B25 A, N52 B25 B, N52 B25 BF, N52 B30 A, N52 B30 B, N52 B30 BF, N52B25B, N53 B30 A								

Engine	Information	A10	A20	A40	A50	A70	C10 - C30		C20	E01
Eng. N52 B25 A, N52 B25 B, N52 B25 BF	x 6, BOSCH, DELPHI, COIL ON PLUG, x 6, BOSCH, DELPHI, COIL ON PLUG						9.6375	C10		
Eng. N52 B25 BF, N52 B30 A, N52 B30 B, N52 B30 BF, N52B25B	Qty: 6						9.6375	C10		
Eng. N53 B30 A	x 6, BOSCH, COIL ON PLUG						9.6507	C10		

525 i xDrive	Petrol	160	09/08-12/10	N53 B30 A

Engine	Information	A10	A20	A40	A50	A70	C10 - C30		C20	E01
All engines	x 6, BOSCH, COIL ON PLUG						9.6507	C10		

525 xi	Petrol	160	04/05-12/10	N52 B25 A, N53 B30 A

Engine	Information	A10	A20	A40	A50	A70	C10 - C30		C20	E01
All engines	x 6, DELPHI, x 6, BOSCH, COIL ON PLUG, DELPHI, COIL ON PLUG						9.6375	C10		
Eng. N53 B30 A	x 6, BOSCH, COIL ON PLUG						9.6507	C10		

525 xi	Petrol	218	07/05->	N52 B30 A

Engine	Information	A10	A20	A40	A50	A70	C10 - C30		C20	E01
All engines	Qty: 6						9.6375	C10		

525Li	Petrol	160	07/05->	N52 B25 A, N52 B25 BF, N52B25B

Engine	Information	A10	A20	A40	A50	A70	C10 - C30		C20	E01
All engines	Qty: 6						9.6375	C10		

528 xi	Petrol	172	03/07->	N52 B30 A

Engine	Information	A10	A20	A40	A50	A70	C10 - C30		C20	E01
All engines	Qty: 6						9.6375	C10		

530 i	Petrol	170	12/01->	3CA4GB16, M54 306 S3, M54 B30 (306S3)

Engine	Information	A10	A20	A40	A50	A70	C10 - C30		C20	E01
Eng. 3CA4GB16	x 6, DELPHI, COIL ON PLUG						9.6375	C10		
Eng. M54 306 S3, M54 B30 (306S3)	Qty: 6						9.6375	C10		

530 i	Petrol	187	03/05-03/10	N52 B30 A

Engine	Information	A10	A20	A40	A50	A70	C10 - C30		C20	E01
All engines	x 6, DELPHI, ELDOR, COIL ON PLUG						9.6375	C10		

530 i	Petrol	190	09/04-03/07	N52 B30 A, N52 B30 BF

Engine	Information	A10	A20	A40	A50	A70	C10 - C30		C20	E01
All engines	x 6, BOSCH, DELPHI, COIL ON PLUG						9.6375	C10		

530 i	Petrol	200	09/06-12/10	N52 B30 A, N52 B30 BF, N53 B30 A

Engine	Information	A10	A20	A40	A50	A70	C10 - C30		C20	E01
All engines	-eng. N53B30A, x 6, DELPHI, COIL ON PLUG						9.6375	C10		
Eng. N53 B30 A	x 6, BOSCH, COIL ON PLUG						9.6507	C10		

530 i xDrive	Petrol	200	09/08-05/10	N53 B30 A

Engine	Information	A10	A20	A40	A50	A70	C10 - C30		C20	E01
All engines	x 6, BOSCH, COIL ON PLUG						9.6507	C10		

530 xi	Petrol	190	09/04-02/07	N52 B30 A

Engine	Information	A10	A20	A40	A50	A70	C10 - C30		C20	E01
All engines	x 6, BOSCH, DELPHI, x 6, BOSCH, COIL ON PLUG, DELPHI, COIL ON PLUG						9.6375	C10		

A10	CONDENSER	A20	CONTACT SET	A40	DISTRIBUTOR CAP	A50	ROTOR	A70	PICK-UP
C10	COIL	C20	IGNITION MODULE	C30	ELECTRONIC IGNITION KIT	E01	IGNITION CABLE SET		

The present application list is a brief version. For the detailed information about the possibility of installation on a specific vehicle, please refer to our web-catalogue http://catalogo.facet.eu/

Vehicle	alim.	kW	Date	Engine	FUNCTIONS ON THE VEHICLE							
					A10	A20	A40	A50	A70	C10 - C30	C20	E01
530 xi	Petrol	200	09/06-05/10	**N52 B30 A, N53 B30 A**								
Eng. N52 B30 A	x 6, DELPHI, COIL ON PLUG									9.6375 C10		
Eng. N53 B30 A	x 6, BOSCH, COIL ON PLUG									9.6507 C10		
530Li	Petrol	190	07/05->	**N52 B30 A, N52 B30 B, N52 B30 BF**								
All engines	Qty: 6									9.6375 C10		
535 i	Petrol	225	04/06-12/09	**N54 B30 A**								
All engines	Qty: 6									9.6375 C10		
535xi	Petrol	225	03/07->	**N54 B30 A**								
All engines	Qty: 6									9.6375 C10		
540 i	Petrol	220	09/05-02/07	**N62 B40 A**								
All engines	x 8, DELPHI, COIL ON PLUG									9.6375 C10		
540 i	Petrol	225	03/07-12/09	**N62 B40 A**								
All engines	x 8, DELPHI, COIL ON PLUG									9.6375 C10		
545 i	Petrol	245	09/03-12/10	**N62 B44 A**								
All engines	x 8, DELPHI, ELDOR, COIL ON PLUG									9.6375 C10		
550 i	Petrol	270	07/05-12/10	**N62 B48 A, N62 B48 B**								
Eng. N62 B48 A	Qty: 8									9.6375 C10		
Eng. N62 B48 B	x 8, DELPHI, COIL ON PLUG									9.6375 C10		
5 VI												
520 i	Petrol	120	09/11-02/17	**N20 B20 A, N20 B20 B**								
All engines	x 4, DELPHI, COIL ON PLUG									9.6375 C10		
520 i	Petrol	125	07/13-10/16	**N20 B16 A**								
All engines	x 4, DELPHI, COIL ON PLUG									9.6375 C10		
520 i	Petrol	135	10/10-02/17	**N20 B20 A, N20 B20 B**								
All engines	x 4, DELPHI, COIL ON PLUG									9.6375 C10		
520Li [CHN]	Petrol	0	01/11->	**N20 B20 D**								
All engines	pole nr. 4									9.6375 C10		
520Li [CHN]	Petrol	115	01/09->	**N52 B25 AF**								
All engines	Qty: 6									9.6375 C10		

A10	CONDENSER	**A20**	CONTACT SET	**A40**	DISTRIBUTOR CAP	**A50**	ROTOR	**A70**	PICK-UP
C10	COIL	**C20**	IGNITION MODULE	**C30**	ELECTRONIC IGNITION KIT	**E01**	IGNITION CABLE SET		

The present application list is a brief version. For the detailed information about the possibility of installation on a specific vehicle, please refer to our web-catalogue http://catalogo.facet.eu/

Vehicle	alim.	kW	Date	Engine	FUNCTIONS ON THE VEHICLE A10	A20	A40	A50	A70	C10 - C30	C20	E01
523 i	Petrol	150	06/09-08/11	**N52 B25 A, N52 B25 AF, N52 B25 B, N52 B25 BF, N53 B30 A**								
Eng. N52 B25 A, N52 B25 AF, N52 B25 B, N52 B25 BF	x 6, DELPHI, COIL ON PLUG									9.6375 C10		
Eng. N53 B30 A	x 6, BOSCH, COIL ON PLUG									9.6507 C10		
523 i	Petrol	155	01/10-08/11	**N53 B30 A**								
All engines	x 6, BOSCH, COIL ON PLUG									9.6507 C10		
523 i	Petrol	160	06/09-08/11	**N53 B30 A**								
All engines	Qty: 6									9.6507 C10		
523Li [CHN]	Petrol	130	01/09->	**N52 B25 AF**								
All engines	Qty: 6									9.6375 C10		
525 d	Diesel	155	09/11-10/16	**N47D20D(N47S1)**								
All engines	Qty: 4									9.6375 C10		
525Li [CHN]	Petrol	120	09/11->	**N20 B20 A**								
All engines	Qty: 4									9.6375 C10		
528 i	Petrol	180	09/11-02/17	**N20 B20 A**								
All engines	x 4, DELPHI, COIL ON PLUG									9.6375 C10		
528 i	Petrol	190	11/09->	**N52 B30 BF, N53 B30 A**								
Eng. N52 B30 BF	Qty: 6									9.6375 C10		
Eng. N53 B30 A	x 6, BOSCH, COIL ON PLUG									9.6507 C10		
528 i xDrive	Petrol	180	09/11-02/17	**N20 B20 A**								
All engines	x 4, DELPHI, COIL ON PLUG									9.6375 C10		
528Li [CHN]	Petrol	0	01/13->	**N20 B20 C**								
All engines	Qty: 4									9.6375 C10		
528Li [CHN]	Petrol	190	09/10->	**N52 B30 AF**								
All engines	Qty: 6									9.6375 C10		
530 Hybrid [CHN]	Petrol/ Electric	0	01/13->	--								
All engines	Qty: 2									9.6375 C10		
530 i	Petrol	190	03/10-06/13	**N52 B30 A, N52 B30 AF, N52 B30 BF**								
All engines	x 6, DELPHI, COIL ON PLUG									9.6375 C10		

A10	CONDENSER	**A20**	CONTACT SET	**A40**	DISTRIBUTOR CAP	**A50**	ROTOR	**A70**	PICK-UP
C10	COIL	**C20**	IGNITION MODULE	**C30**	ELECTRONIC IGNITION KIT	**E01**	IGNITION CABLE SET		

The present application list is a brief version. For the detailed information about the possibility of installation on a specific vehicle, please refer to our web-catalogue http://catalogo.facet.eu/

Vehicle	alim.	kW	Date	Engine	FUNCTIONS ON THE VEHICLE							
					A10	A20	A40	A50	A70	C10 - C30	C20	E01
530 i	Petrol	200	05/11-06/13	**N53 B30 A**								
Engine: All engines	Information: x 6, BOSCH, COIL ON PLUG									9.6507 C10		
530Li [CHN]	Petrol	190	09/10->	**N52 B30 AF**								
Engine: All engines	Information: Qty: 6									9.6375 C10		
535 i	Petrol	225	01/10-02/17	**N55 B30 A**								
Engine: All engines	Information: x 6, DELPHI, COIL ON PLUG									9.6375 C10		
535 i	Petrol	240	07/13-02/17	**N55 B30 A**								
Engine: All engines	Information: x 6, DELPHI, COIL ON PLUG									9.6375 C10		
535 i xDrive	Petrol	225	03/11-02/17	**N55 B30 A**								
Engine: All engines	Information: x 6, DELPHI, COIL ON PLUG									9.6375 C10		
535 i xDrive	Petrol	240	07/13-02/17	**N55 B30 A**								
Engine: All engines	Information: x 6, DELPHI, COIL ON PLUG									9.6375 C10		
535Li [CHN]	Petrol	225	01/09->	**N55 B30 A**								
Engine: All engines	Information: Qty: 6									9.6375 C10		
550 i	Petrol	300	03/10-06/13	**N63 B44 A**								
Engine: All engines	Information: x 8, DELPHI, ELDOR, COIL ON PLUG									9.6375 C10		
550 i	Petrol	330	07/13-02/17	**N63 B44 B**								
Engine: All engines	Information: x 8, BOSCH, DELPHI, COIL ON PLUG									9.6375 C10		
550 i xDrive	Petrol	300	08/10-06/13	**N63 B44 A**								
Engine: All engines	Information: x 8, DELPHI, ELDOR, COIL ON PLUG									9.6375 C10		
550 i xDrive	Petrol	330	07/13-10/16	**N63 B44 B**								
Engine: All engines	Information: x 8, BOSCH, DELPHI, COIL ON PLUG									9.6375 C10		
ActiveHybrid	Petrol/ Electric	225	12/11-10/16	**N55 B30 A**								
Engine: All engines	Information: x 6, DELPHI, COIL ON PLUG									9.6375 C10		
ActiveHybrid	Petrol/ Electric	250	12/11-10/16	**N55 B30 A**								
Engine: All engines	Information: x 6, DELPHI, COIL ON PLUG									9.6375 C10		
M5	Petrol	412	09/11-10/16	**S63 B44 B**								
Engine: All engines	Information: x 8, BOSCH, DELPHI, COIL ON PLUG									9.6375 C10		

A10	CONDENSER	**A20**	CONTACT SET	**A40**	DISTRIBUTOR CAP	**A50**	ROTOR	**A70**	PICK-UP
C10	COIL	**C20**	IGNITION MODULE	**C30**	ELECTRONIC IGNITION KIT	**E01**	IGNITION CABLE SET		

The present application list is a brief version. For the detailed information about the possibility of installation on a specific vehicle, please refer to our web-catalogue http://catalogo.facet.eu/

Vehicle	alim.	kW	Date	Engine	FUNCTIONS ON THE VEHICLE A10	A20	A40	A50	A70	C10 - C30	C20	E01
M5 30th Anniversary	Petrol	441	07/14-10/16	**S63 B44 B**								
All engines	x 8, BOSCH, DELPHI, COIL ON PLUG									9.6375 C10		
M5 Competition	Petrol	423	02/13-10/16	**S63 B44 B**								
All engines	x 8, BOSCH, DELPHI, COIL ON PLUG									9.6375 C10		
5 VI GT												
528 i	Petrol	180	07/13-02/17	**N20 B20 A**								
All engines	x 4, DELPHI, COIL ON PLUG									9.6375 C10		
535 i	Petrol	225	01/09-02/17	**N55 B30 A**								
All engines	x 6, DELPHI, COIL ON PLUG									9.6375 C10		
535 i xDrive	Petrol	225	09/10-02/17	**N55 B30 A**								
All engines	x 6, DELPHI, COIL ON PLUG									9.6375 C10		
550 i	Petrol	298	10/09-06/12	**N63 B44 A**								
All engines	Qty: 8									9.6375 C10		
550 i	Petrol	300	08/09-06/12	**N63 B44 A**								
All engines	x 8, DELPHI, ELDOR, COIL ON PLUG									9.6375 C10		
550 i	Petrol	330	07/12-02/17	**N63 B44 B**								
All engines	x 8, BOSCH, DELPHI, COIL ON PLUG									9.6375 C10		
550 i xDrive	Petrol	300	06/10-03/14	**N63 B40 A, N63 B44 A**								
Eng. N63 B40 A	Qty: 8									9.6375 C10		
Eng. N63 B44 A	x 8, DELPHI, ELDOR, COIL ON PLUG									9.6375 C10		
550 i xDrive	Petrol	330	07/12-02/17	**N63 B44 B**								
All engines	x 8, BOSCH, DELPHI, COIL ON PLUG									9.6375 C10		
5 VII												
520 E PLUG-IN-HYBRID	Petrol/ Electric	120	03/21->	**B48 B20 A**								
All engines	x 4, COIL ON PLUG									9.6532 C10		
520 E PLUG-IN-HYBRID	Petrol/ Electric	150	03/21->	**B48 B20 A**								
All engines	x 4, COIL ON PLUG									9.6532 C10		
520 i	Petrol	120	07/17-06/20	**B48 B20 A, B48 B20 B**								
All engines	x 4, COIL ON PLUG									9.6532 C10		
520 i	Petrol	125	07/17->	**B48 B16 A**								
All engines	x 4, COIL ON PLUG									9.6532 C10		

A10	CONDENSER	**A20**	CONTACT SET	**A40**	DISTRIBUTOR CAP	**A50**	ROTOR	**A70**	PICK-UP
C10	COIL	**C20**	IGNITION MODULE	**C30**	ELECTRONIC IGNITION KIT	**E01**	IGNITION CABLE SET		

The present application list is a brief version. For the detailed information about the possibility of installation on a specific vehicle, please refer to our web-catalogue http://catalogo.facet.eu/

Vehicle	alim.	kW	Date	Engine	FUNCTIONS ON THE VEHICLE							
					A10	A20	A40	A50	A70	C10 - C30	C20	E01
520 i	Petrol	135	07/17->	**B48 B20 A, B48 B20 B**						9.6532 C10		
520 i	Petrol	155	07/17-06/20	**B48 B20 A, B48 B20 B**						9.6532 C10		
520 i Mild-Hybrid	Petrol/ Electric	120	07/20->	**B48 B20 A**						9.6532 C10		
520 i Mild-Hybrid	Petrol/ Electric	135	07/20->	**B48 B20 A**						9.6532 C10		
530 e Plug-in-Hybrid	Petrol/ Electric	120	07/19->	**B48 B20 A**						9.6532 C10		
530 e Plug-in-Hybrid	Petrol/ Electric	135	03/17->	**B46 B20 B, B48 B20 A**						9.6532 C10		
530 e Plug-in-Hybrid	Petrol/ Electric	170	07/19-06/20	**B48 B20 A**						9.6532 C10		
530 e Plug-in-Hybrid	Petrol/ Electric	200	07/20->	**B48 B20 A**						9.6532 C10		
530 e Plug-in-Hybrid	Petrol/ Electric	215	07/20->	**B46 B20 B, B48 B20 A**						9.6532 C10		
530 e Plug-in-Hybrid xDrive	Petrol/ Electric	120	07/19->	**B48 B20 A**						9.6532 C10		
530 e Plug-in-Hybrid xDrive	Petrol/ Electric	135	03/17->	**B46 B20 B, B48 B20 A**						9.6532 C10		
530 e Plug-in-Hybrid xDrive	Petrol/ Electric	170	07/19-06/20	**B48 B20 A**						9.6532 C10		
530 e Plug-in-Hybrid xDrive	Petrol/ Electric	185	03/17-06/20	**B46 B20 B, B48 B20 A**						9.6532 C10		

Engine	Information
All engines	x 4, COIL ON PLUG

A10	CONDENSER	**A20**	CONTACT SET	**A40**	DISTRIBUTOR CAP	**A50**	ROTOR	**A70**	PICK-UP
C10	COIL	**C20**	IGNITION MODULE	**C30**	ELECTRONIC IGNITION KIT	**E01**	IGNITION CABLE SET		

The present application list is a brief version. For the detailed information about the possibility of installation on a specific vehicle, please refer to our web-catalogue http://catalogo.facet.eu/

Vehicle	alim.	kW	Date	Engine	FUNCTIONS ON THE VEHICLE							
					A10	A20	A40	A50	A70	C10 - C30	C20	E01
530 e Plug-in-Hybrid xDrive	Petrol/ Electric	200	07/20->	B48 B20 A						9.6532 C10		
530 e Plug-in-Hybrid xDrive	Petrol/ Electric	215	07/20->	B46 B20 B, B48 B20 A						9.6532 C10		
530 i	Petrol	185	09/16->	B46 B20 B, B48 B20 B						9.6532 C10		
530 i Mild-Hybrid	Petrol/ Electric	185	07/20->	B48 B20 B						9.6532 C10		
530 i Mild-Hybrid xDrive	Petrol/ Electric	185	07/20->	B48 B20 B						9.6532 C10		
530 i xDrive	Petrol	183	09/16->	B46 B20 B						9.6532 C10		
530 i xDrive	Petrol	185	09/16->	B46 B20 B, B48 B20 B						9.6532 C10		
540 i	Petrol	250	09/16-06/20	B58 B30 A						9.6532 C10		
540 i	Petrol	265	09/16-06/20	B58 B30 A						9.6532 C10		
540 i Mild-Hybrid	Petrol/ Electric	245	07/20->	B58 B30 C						9.6532 C10		
540 i Mild-Hybrid xDrive	Petrol/ Electric	245	07/20->	B58 B30 C						9.6532 C10		
540 i xDrive	Petrol	250	09/16->	B58 B30 A						9.6532 C10		
540 i xDrive	Petrol	265	09/16-06/20	B58 B30 A						9.6532 C10		

Engine	Information
All engines	x 4, COIL ON PLUG
All engines	x 6, COIL ON PLUG
All engines	->year 01/06/19, x 4, COIL ON PLUG ---------- 01/07/19 ->, x 4, COIL ON PLUG

A10	CONDENSER	**A20**	CONTACT SET	**A40**	DISTRIBUTOR CAP	**A50**	ROTOR	**A70**	PICK-UP
C10	COIL	**C20**	IGNITION MODULE	**C30**	ELECTRONIC IGNITION KIT	**E01**	IGNITION CABLE SET		

The present application list is a brief version. For the detailed information about the possibility of installation on a specific vehicle, please refer to our web-catalogue http://catalogo.facet.eu/

Vehicle	alim.	kW	Date	Engine	FUNCTIONS ON THE VEHICLE A10	A20	A40	A50	A70	C10 - C30	C20	E01
545 e Plug-in-Hybrid xDrive	Petrol/ Electric	210	11/20->	**B58 B30 C**								

Engine	Information	A10	A20	A40	A50	A70	C10 - C30		C20	E01
All engines	x 4, COIL ON PLUG						9.6532	C10		

545 e Plug-in-Hybrid xDrive	Petrol/ Electric	290	11/20->	**B58 B30 C**

Engine	Information	A10	A20	A40	A50	A70	C10 - C30		C20	E01
All engines	x 4, COIL ON PLUG						9.6532	C10		

M 550 i xDrive	Petrol	340	03/17-06/19	**N63 B44 C**

Engine	Information	A10	A20	A40	A50	A70	C10 - C30		C20	E01
All engines	x 8, DELPHI, COIL ON PLUG						9.6375	C10		

M5	Petrol	441	09/17->	**S63 B44 B**

Engine	Information	A10	A20	A40	A50	A70	C10 - C30		C20	E01
All engines	x 8, DELPHI, COIL ON PLUG						9.6375	C10		

M5 Competition	Petrol	460	07/18->	**S63 B44 B**

Engine	Information	A10	A20	A40	A50	A70	C10 - C30		C20	E01
All engines	x 8, DELPHI, COIL ON PLUG						9.6375	C10		

M5 CS	Petrol	467	03/21->	**S63 B44 B**

Engine	Information	A10	A20	A40	A50	A70	C10 - C30		C20	E01
All engines	x 8, DELPHI, COIL ON PLUG						9.6375	C10		

6 I

628 CSi	Petrol	135	09/79-08/87	**M30 B28**

Engine	Information	A10	A20	A40	A50	A70	C10 - C30		C20	E01
All engines	version Bosch			2.7481PHT	3.7573/12RS					
All engines									9.4005	

633 CSi	Petrol	145	09/78-08/84	**0SU18**

Engine	Information	A10	A20	A40	A50	A70	C10 - C30		C20	E01
All engines									9.4005	

633 CSi	Petrol	147	10/75-12/81	**0SU18**

Engine	Information	A10	A20	A40	A50	A70	C10 - C30		C20	E01
All engines									9.4005	

635 CSi	Petrol	160	06/78-04/82	**M30 B35 (Motronic, 9.3:1)**

Engine	Information	A10	A20	A40	A50	A70	C10 - C30		C20	E01
All engines	01/01/85 ->, version Bosch			2.7530/8PHT	3.7573/19RS					
All engines									9.4005	

M 635 CSi	Petrol	191	04/86-02/89	**S38 B35 (356ED)**

Engine	Information	A10	A20	A40	A50	A70	C10 - C30		C20	E01
All engines	version Bosch			2.7530/8PHT	3.7573/19RS					

M 635 CSi	Petrol	210	04/84-12/88	**M88 B35 (356ED)**

Engine	Information	A10	A20	A40	A50	A70	C10 - C30		C20	E01
All engines	version Bosch			2.7530/8PHT	3.7573/19RS					

6 II

630 i	Petrol	190	09/04-08/07	**N52 B30 A, N52 B30 B, N52 B30 BF**

Engine	Information	A10	A20	A40	A50	A70	C10 - C30		C20	E01
All engines	x 6, ELDOR, x 6, BOSCH, COIL ON PLUG, DELPHI, COIL ON PLUG						9.6375	C10		

A10	CONDENSER	**A20**	CONTACT SET	**A40**	DISTRIBUTOR CAP	**A50**	ROTOR	**A70**	PICK-UP
C10	COIL	**C20**	IGNITION MODULE	**C30**	ELECTRONIC IGNITION KIT	**E01**	IGNITION CABLE SET		

The present application list is a brief version. For the detailed information about the possibility of installation on a specific vehicle, please refer to our web-catalogue http://catalogo.facet.eu/

Vehicle	alim.	kW	Date	Engine	FUNCTIONS ON THE VEHICLE A10	A20	A40	A50	A70	C10 - C30	C20	E01
630 i	Petrol	200	09/07-08/10	N52 B30 A, N52 B30 B, N52 B30 BF, N53 B30 A								
Eng. N52 B30 A, N52 B30 B, N52 B30 BF	x 6, DELPHI, COIL ON PLUG									9.6375 C10		
Eng. N53 B30 A	x 6, BOSCH, COIL ON PLUG									9.6507 C10		
645 Ci	Petrol	245	09/03-08/05	N62 B44 A								
All engines	x 8, ELDOR, COIL ON PLUG									9.6375 C10		
650 i	Petrol	270	09/05-08/10	N62 B48 B								
All engines	x 8, DELPHI, ELDOR, COIL ON PLUG									9.6375 C10		
6 III												
640 i	Petrol	235	07/11-10/18	N55 B30 A								
All engines	x 6, DELPHI, COIL ON PLUG									9.6375 C10		
640 i xDrive	Petrol	235	03/13-10/18	N55 B30 A								
All engines	x 6, DELPHI, COIL ON PLUG									9.6375 C10		
650 i	Petrol	298	09/11-12/12	N63 B44 A								
All engines	x 8, ELDOR, COIL ON PLUG									9.6375 C10		
650 i	Petrol	300	12/10-06/12	N63 B44 A								
All engines	x 8, DELPHI, ELDOR, COIL ON PLUG									9.6375 C10		
650 i	Petrol	330	07/12-10/18	N63 B44 A, N63 B44 B								
Eng. N63 B44 A	Qty: 8									9.6375 C10		
Eng. N63 B44 B	x 8, BOSCH, DELPHI, COIL ON PLUG									9.6375 C10		
650 i xDrive	Petrol	0	11/11->	N63 B40 A								
All engines	Qty: 8									9.6375 C10		
650 i xDrive	Petrol	300	09/11-02/15	N63 B44 A								
All engines	x 8, DELPHI, ELDOR, COIL ON PLUG									9.6375 C10		
650 i xDrive	Petrol	330	07/12-10/18	N63 B44 A, N63 B44 B								
Eng. N63 B44 A	Qty: 8									9.6375 C10		
Eng. N63 B44 B	x 8, BOSCH, DELPHI, COIL ON PLUG									9.6375 C10		
650 i xDrive 4.0	Petrol	330	06/11->	N63 B40 A								
All engines	Qty: 8									9.6375 C10		
M6	Petrol	412	03/12-10/18	S63 B44 B								
All engines	x 8, BOSCH, DELPHI, COIL ON PLUG									9.6375 C10		
M6 Competition	Petrol	423	07/13-02/15	S63 B44 B								
All engines	x 8, BOSCH, COIL ON PLUG									9.6375 C10		

A10	CONDENSER	A20	CONTACT SET	A40	DISTRIBUTOR CAP	A50	ROTOR	A70	PICK-UP
C10	COIL	C20	IGNITION MODULE	C30	ELECTRONIC IGNITION KIT	E01	IGNITION CABLE SET		

The present application list is a brief version. For the detailed information about the possibility of installation on a specific vehicle, please refer to our web-catalogue http://catalogo.facet.eu/

Vehicle	alim.	kW	Date	Engine	FUNCTIONS ON THE VEHICLE: A10	A20	A40	A50	A70	C10 - C30	C20	E01
M6 Competition	Petrol	441	03/15-10/18	**S63 B44 B**								

Engine	Information	A10	A20	A40	A50	A70	C10 - C30	C20	E01
All engines	x 8, BOSCH, DELPHI, COIL ON PLUG						9.6375 C10		

6 IV GT

630 i	Petrol	183	06/17-06/20	**B48 B20 B**

Engine	Information	A10	A20	A40	A50	A70	C10 - C30	C20	E01
All engines	->year 01/06/19, x 4, COIL ON PLUG 01/07/19 ->, x 4, COIL ON PLUG						9.6532 C10		

630 i	Petrol	190	07/17-06/20	**B48 B20 B**

Engine	Information	A10	A20	A40	A50	A70	C10 - C30	C20	E01
All engines	x 4, COIL ON PLUG						9.6532 C10		

630 i Mild-Hybrid	Petrol/ Electric	190	07/20->	**B48 B20 B**

Engine	Information	A10	A20	A40	A50	A70	C10 - C30	C20	E01
All engines	x 4, COIL ON PLUG						9.6532 C10		

630 i xDrive	Petrol	190	07/19->	**B58 B30 C**

Engine	Information	A10	A20	A40	A50	A70	C10 - C30	C20	E01
All engines	x 6, COIL ON PLUG						9.6532 C10		

640 i	Petrol	250	06/17-06/20	**B58 B30 A, B58 B30 C**

Engine	Information	A10	A20	A40	A50	A70	C10 - C30	C20	E01
All engines	x 6, COIL ON PLUG						9.6532 C10		

640 i	Petrol	265	06/17-06/20	**B58 B30 A, B58 B30 C**

Engine	Information	A10	A20	A40	A50	A70	C10 - C30	C20	E01
All engines	x 6, COIL ON PLUG						9.6532 C10		

640 i Mild-Hybrid	Petrol/ Electric	245	07/20->	**B58 B30 C**

Engine	Information	A10	A20	A40	A50	A70	C10 - C30	C20	E01
All engines	x 6, COIL ON PLUG						9.6532 C10		

640 i Mild-Hybrid xDrive	Petrol/ Electric	245	07/20->	**B58 B30 C**

Engine	Information	A10	A20	A40	A50	A70	C10 - C30	C20	E01
All engines	x 6, COIL ON PLUG						9.6532 C10		

640 i xDrive	Petrol	250	06/17-06/20	**B58 B30 A, B58 B30 C**

Engine	Information	A10	A20	A40	A50	A70	C10 - C30	C20	E01
All engines	x 6, COIL ON PLUG						9.6532 C10		

640 i xDrive	Petrol	265	06/17-06/20	**B58 B30 A, B58 B30 C**

Engine	Information	A10	A20	A40	A50	A70	C10 - C30	C20	E01
All engines	x 6, COIL ON PLUG						9.6532 C10		

7 I

728	Petrol	125	05/77-08/79	**M30 B28**

Engine	Information	A10	A20	A40	A50	A70	C10 - C30	C20	E01
All engines	version Bosch			2.7481PHT					
All engines								9.4005	

728 i	Petrol	135	09/77-08/86	**M30 B28**

Engine	Information	A10	A20	A40	A50	A70	C10 - C30	C20	E01
All engines	->year 31/12/80, version Bosch			2.7481PHT					
All engines								9.4005	

A10	CONDENSER	**A20**	CONTACT SET	**A40**	DISTRIBUTOR CAP	**A50**	ROTOR	**A70**	PICK-UP
C10	COIL	**C20**	IGNITION MODULE	**C30**	ELECTRONIC IGNITION KIT	**E01**	IGNITION CABLE SET		

The present application list is a brief version. For the detailed information about the possibility of installation on a specific vehicle, please refer to our web-catalogue http://catalogo.facet.eu/

Vehicle	alim.	kW	Date	Engine	FUNCTIONS ON THE VEHICLE A10	A20	A40	A50	A70	C10 - C30	C20	E01
730	Petrol	135	05/77-08/79	**M30 B30**								
All engines	version Bosch						2.7481PHT					
All engines											9.4005	
735 i	Petrol	141	04/85-08/86	**M30 B35 (Motronic)**								
All engines	version Bosch						2.7530/8PHT	3.7573/19RS				
7 II												
730 i, iL	Petrol	138	03/87-03/94	**M30 B30 (306KA)**								
All engines	version Bosch						2.7530/8PHT	3.7573/19RS				
All engines	->year 30/09/88, 01/03/88 ->											4.8578
730 i, iL	Petrol	145	03/85-01/89	**M30 B30 (306EA)**								
All engines	version Bosch						2.7530/8PHT	3.7573/19RS				
All engines	->year 30/09/88, 01/03/88 ->											4.8578
730 i, iL V8	Petrol	160	04/92-09/94	**M60 B30 (308S1)**								
All engines	without spark plug connector, Qty: 8									9.6062S C10		
All engines	incl. spark plug connector, Qty: 8									9.6312 C10		
735 i, iL	Petrol	155	06/86-07/92	**M30 B34 (346KB)**								
All engines	version Bosch						2.7530/8PHT	3.7573/19RS				
All engines	01/03/88 ->, ->year 30/09/88											4.8578
735 i, iL	Petrol	162	07/86-01/89	**M30 B35 (Motronic, 9.2:1)**								
All engines	version Bosch						2.7530/8PHT	3.7573/19RS				
All engines	01/03/88 ->, ->year 30/09/88											4.8578
740 i, iL V8	Petrol	210	05/92-03/94	**M60 B40 (408S1)**								
All engines	without spark plug connector, Qty: 8									9.6062S C10		
All engines	incl. spark plug connector, Qty: 8									9.6312 C10		
750 i, iL V12	Petrol	220	09/87-09/94	**M70 B50 (5012A)**								
All engines	Qty: 2, version Bosch						2.7530/8PHT	3.7573/19RS				
All engines	to engine cylinder:1-6									9.6012 C10		
7 III												
728 i, iL	Petrol	142	08/95-11/01	**M52 B28 (286S1), M52 B28 (286S2)**								
All engines	without spark plug connector, Qty: 6									9.6252 C10		
All engines	incl. spark plug connector, Qty: 6									9.6313 C10		
728i X	Petrol	142	11/95-09/01	**M52 B28 (286S1)**								
All engines	without spark plug connector, Qty: 6									9.6252 C10		
All engines	incl. spark plug connector, Qty: 6									9.6313 C10		
730 i, iL	Petrol	155	10/94-11/01	**M60 B30 (308S1)**								
All engines	without spark plug connector, Qty: 8									9.6062S C10		

A10	CONDENSER	**A20**	CONTACT SET	**A40**	DISTRIBUTOR CAP	**A50**	ROTOR	**A70**	PICK-UP
C10	COIL	**C20**	IGNITION MODULE	**C30**	ELECTRONIC IGNITION KIT	**E01**	IGNITION CABLE SET		

The present application list is a brief version. For the detailed information about the possibility of installation on a specific vehicle, please refer to our web-catalogue http://catalogo.facet.eu/

Vehicle	alim.	kW	Date	Engine	A10	A20	A40	A50	A70	C10 - C30		C20	E01
					FUNCTIONS ON THE VEHICLE								
730 i, iL	Petrol	155	10/94-11/01	ENGINE M60 B30 (308S1)									
Engine			Information		A10	A20	A40	A50	A70	C10 - C30		C20	E01
All engines			incl. spark plug connector, Qty: 8							9.6312	C10		
730 i, iL	Petrol	160	03/94-02/96	ENGINE M60 B30 (308S1)									
Engine			Information		A10	A20	A40	A50	A70	C10 - C30		C20	E01
All engines			without spark plug connector, Qty: 8							9.6062S	C10		
All engines			incl. spark plug connector, Qty: 8							9.6312	C10		
735 i, iL	Petrol	173	03/96-08/98	ENGINE M62 B35 (358S1)									
Engine			Information		A10	A20	A40	A50	A70	C10 - C30		C20	E01
All engines			without spark plug connector, Qty: 8							9.6252	C10		
All engines			incl. spark plug connector, Qty: 8							9.6313	C10		
740 i, iL	Petrol	210	03/94-07/01	ENGINE M60 B40 (408S1), M62 B44 (448S1), M62 B44 (448S2)									
Engine			Information		A10	A20	A40	A50	A70	C10 - C30		C20	E01
Eng. M60 B40 (408S1)			without spark plug connector, Qty: 8							9.6062S	C10		
Eng. M62 B44 (448S1), M62 B44 (448S2)			without spark plug connector, Qty: 8							9.6252	C10		
Eng. M60 B40 (408S1)			incl. spark plug connector, Qty: 8							9.6312	C10		
Eng. M62 B44 (448S1), M62 B44 (448S2)			incl. spark plug connector, Qty: 8							9.6313	C10		
750 i, iL	Petrol	240	11/94-07/01	ENGINE M73 B54 (54121), M73 B54 (54122)									
Engine			Information		A10	A20	A40	A50	A70	C10 - C30		C20	E01
All engines			Qty: 2, version Bosch				2.7530/8PHT	3.7573/19RS					
7 IV													
730 i, Li	Petrol	170	03/03-07/08	ENGINE 1CYA, M54 B30 (306S3)									
Engine			Information		A10	A20	A40	A50	A70	C10 - C30		C20	E01
Eng. 1CYA			x 6, DELPHI, COIL ON PLUG							9.6375	C10		
Eng. M54 B30 (306S3)			Qty: 6							9.6375	C10		
730 i, Li	Petrol	184	03/05-07/08	ENGINE N52 B30 A									
Engine			Information		A10	A20	A40	A50	A70	C10 - C30		C20	E01
All engines			Qty: 6							9.6375	C10		
730 i, Li	Petrol	190	03/05-08/08	ENGINE N52 B30 A, N52 B30 BF									
Engine			Information		A10	A20	A40	A50	A70	C10 - C30		C20	E01
All engines			x 6, BOSCH, DELPHI, ELDOR, COIL ON PLUG							9.6375	C10		
730 i,Li	Petrol	190	03/05->	ENGINE N52 B30 B									
Engine			Information		A10	A20	A40	A50	A70	C10 - C30		C20	E01
All engines			Qty: 6							9.6375	C10		
735 i, Li	Petrol	200	11/01-02/05	ENGINE N62 B36 A									
Engine			Information		A10	A20	A40	A50	A70	C10 - C30		C20	E01
All engines			x 8, ELDOR, COIL ON PLUG							9.6375	C10		
740 i, Li	Petrol	225	03/05-08/08	ENGINE N62 B40 A									
Engine			Information		A10	A20	A40	A50	A70	C10 - C30		C20	E01
All engines			x 8, DELPHI, ELDOR, COIL ON PLUG							9.6375	C10		
745 i, Li	Petrol	245	07/01-03/05	ENGINE N62 B44 A									
Engine			Information		A10	A20	A40	A50	A70	C10 - C30		C20	E01
All engines			x 8, DELPHI, ELDOR, COIL ON PLUG							9.6375	C10		

A10	CONDENSER	A20	CONTACT SET	A40	DISTRIBUTOR CAP	A50	ROTOR	A70	PICK-UP
C10	COIL	C20	IGNITION MODULE	C30	ELECTRONIC IGNITION KIT	E01	IGNITION CABLE SET		

The present application list is a brief version. For the detailed information about the possibility of installation on a specific vehicle, please refer to our web-catalogue http://catalogo.facet.eu/

Vehicle	alim.	kW	Date	Engine	FUNCTIONS ON THE VEHICLE A10	A20	A40	A50	A70	C10 - C30	C20	E01
750 i, Li	Petrol	270	03/05-08/08	**N62 B48 B**								
All engines	x 8, DELPHI, ELDOR, COIL ON PLUG									9.6375 C10		
760 i, Li	Petrol	327	01/03-08/08	**N73 B60 A, N73 B60 B**								
All engines	x 12, ELDOR, COIL ON PLUG									9.6375 C10		
B7 Alpina	Petrol	0	01/06->	**H1**								
All engines	Qty: 8									9.6375 C10		
7 V												
730 i, Li	Petrol	190	09/09-06/15	**N52 B30 A, N52 B30 AF, N52 B30 BF**								
All engines	x 6, DELPHI, COIL ON PLUG									9.6375 C10		
740 i, Li	Petrol	235	07/12-12/15	**N55 B30 A**								
All engines	x 6, DELPHI, COIL ON PLUG									9.6375 C10		
740 i, Li	Petrol	240	09/08-06/12	**N54 B30 A**								
All engines	x 6, DELPHI, ELDOR, COIL ON PLUG									9.6375 C10		
740 i, Li xDrive	Petrol	235	07/12-12/15	**N55 B30 A**								
All engines	x 6, DELPHI, COIL ON PLUG									9.6375 C10		
750 i, Li	Petrol	300	09/08-06/12	**N63 B44 A**								
All engines	x 8, DELPHI, ELDOR, COIL ON PLUG									9.6375 C10		
750 i, Li	Petrol	330	07/12-06/15	**N63 B44 B**								
All engines	x 8, BOSCH, COIL ON PLUG									9.6375 C10		
750 i, Li xDrive	Petrol	300	09/09-06/12	**N63 B44 A, N63 B44 B**								
Eng. N63 B44 A	x 8, DELPHI, ELDOR, COIL ON PLUG									9.6375 C10		
Eng. N63 B44 B	Qty: 8									9.6375 C10		
750 i, Li xDrive	Petrol	330	07/12-06/15	**N63 B44 B**								
All engines	x 8, BOSCH, COIL ON PLUG									9.6375 C10		
750Li xDrive	Petrol	0	01/11->	**N63 B40 A**								
All engines	Qty: 8									9.6375 C10		
760 i, Li	Petrol	400	09/09-12/15	**N74 B60 A**								
All engines	x 12, DELPHI, COIL ON PLUG									9.6375 C10		
ActiveHybrid 7	Petrol/ Electric	235	08/12-06/15	**N55 B30 A**								
All engines	x 6, DELPHI, COIL ON PLUG									9.6375 C10		

A10	CONDENSER	**A20**	CONTACT SET	**A40**	DISTRIBUTOR CAP	**A50**	ROTOR	**A70**	PICK-UP
C10	COIL	**C20**	IGNITION MODULE	**C30**	ELECTRONIC IGNITION KIT	**E01**	IGNITION CABLE SET		

The present application list is a brief version. For the detailed information about the possibility of installation on a specific vehicle, please refer to our web-catalogue http://catalogo.facet.eu/

Vehicle	alim.	kW	Date	Engine	FUNCTIONS ON THE VEHICLE							
					A10	A20	A40	A50	A70	C10 - C30	C20	E01
ActiveHybrid 7	Petrol/ Electric	260	08/12-06/15	N55 B30 A								
All engines				x 6, DELPHI, COIL ON PLUG						9.6375 C10		
ActiveHybrid 7	Petrol/ Electric	330	04/10-06/12	N63 B44 A								
All engines				x 8, DELPHI, ELDOR, COIL ON PLUG						9.6375 C10		
ActiveHybrid 7	Petrol/ Electric	342	04/10-06/12	N63 B44 A								
All engines				x 8, DELPHI, ELDOR, COIL ON PLUG						9.6375 C10		
7 VI												
730 i	Petrol	183	11/15->	B48 B20 B								
All engines				x 4, COIL ON PLUG						9.6532 C10		
730 i, Li	Petrol	190	11/15-02/19	B48 B20 B								
All engines				x 4, COIL ON PLUG						9.6532 C10		
730 i, Li	Petrol	195	03/19->	B48 B20 B								
All engines				x 4, COIL ON PLUG						9.6532 C10		
740 e, Le	Petrol/ Electric	190	07/16-02/19	B48 B20 B								
All engines				x 4, COIL ON PLUG						9.6532 C10		
740 e, Le	Petrol/ Electric	240	07/16-02/19	B48 B20 B								
All engines				x 4, COIL ON PLUG						9.6532 C10		
740 i, Li	Petrol	240	07/15-02/19	B58 B30 A								
All engines				x 6, COIL ON PLUG						9.6532 C10		
740 i, Li	Petrol	250	03/19->	B58 B30 C								
All engines				x 6, COIL ON PLUG						9.6532 C10		
740 Le xDrive	Petrol/ Electric	190	07/16-02/19	B48 B20 B								
All engines				x 4, COIL ON PLUG						9.6532 C10		
740 Le xDrive	Petrol/ Electric	240	07/16-02/19	B48 B20 B								
All engines				x 4, COIL ON PLUG						9.6532 C10		
740 Li xDrive	Petrol	240	03/16-02/19	B58 B30 A								
All engines				x 6, COIL ON PLUG						9.6532 C10		

A10	CONDENSER	A20	CONTACT SET	A40	DISTRIBUTOR CAP	A50	ROTOR	A70	PICK-UP
C10	COIL	C20	IGNITION MODULE	C30	ELECTRONIC IGNITION KIT	E01	IGNITION CABLE SET		

The present application list is a brief version. For the detailed information about the possibility of installation on a specific vehicle, please refer to our web-catalogue http://catalogo.facet.eu/

Vehicle	alim.	kW	Date	Engine	FUNCTIONS ON THE VEHICLE							
					A10	A20	A40	A50	A70	C10 - C30	C20	E01
740 Li xDrive	Petrol	250	03/19->	ENGINE B58 B30 C								
Engine: All engines	Information: x 6, COIL ON PLUG									9.6532 C10		
745 e, Le Plug-in-Hybrid	Petrol/ Electric	210	03/19->	ENGINE B58 B30 C								
Engine: All engines	Information: x 6, COIL ON PLUG									9.6532 C10		
745 e, Le Plug-in-Hybrid	Petrol/ Electric	290	03/19->	ENGINE B58 B30 C								
Engine: All engines	Information: x 6, COIL ON PLUG									9.6532 C10		
745 Le Plug-in-Hybrid xDrive	Petrol/ Electric	210	03/19->	ENGINE B58 B30 C								
Engine: All engines	Information: x 6, COIL ON PLUG									9.6532 C10		
745 Le Plug-in-Hybrid xDrive	Petrol/ Electric	290	03/19->	ENGINE B58 B30 C								
Engine: All engines	Information: x 6, COIL ON PLUG									9.6532 C10		
750 i, Li	Petrol	330	11/15-02/19	ENGINE N63 B44 C								
Engine: All engines	Information: x 8, DELPHI, COIL ON PLUG									9.6375 C10		
750 i, Li xDrive	Petrol	330	09/15-02/19	ENGINE N63 B44 C								
Engine: All engines	Information: x 8, DELPHI, COIL ON PLUG									9.6375 C10		
750 Li xDrive	Petrol	330	03/16->	ENGINE N63 B40 B								
Engine: All engines	Information: x 8, DELPHI, COIL ON PLUG									9.6375 C10		
M 760 i, Li xDrive	Petrol	448	12/16-02/19	ENGINE N74 B66 B								
Engine: All engines	Information: x 12, DELPHI, COIL ON PLUG									9.6375 C10		
M 760 Li xDrive	Petrol	430	03/19->	ENGINE N74 B66 C								
Engine: All engines	Information: x 12, DELPHI, COIL ON PLUG									9.6375 C10		
8												
840 Ci	Petrol	210	03/96-06/99	ENGINE M62 B44 (448S1)								
Engine: All engines	Information: without spark plug connector, Qty: 8									9.6252 C10		
Engine: All engines	Information: incl. spark plug connector, Qty: 8									9.6313 C10		
840 i	Petrol	210	03/93-02/96	ENGINE M60 B40 (408S1)								
Engine: All engines	Information: without spark plug connector, Qty: 8									9.6062S C10		
Engine: All engines	Information: incl. spark plug connector, Qty: 8									9.6312 C10		
840 i	Petrol	245	11/20->	ENGINE B58 B30 C								
Engine: All engines	Information: x 6, COIL ON PLUG									9.6532 C10		

A10	CONDENSER	A20	CONTACT SET	A40	DISTRIBUTOR CAP	A50	ROTOR	A70	PICK-UP
C10	COIL	C20	IGNITION MODULE	C30	ELECTRONIC IGNITION KIT	E01	IGNITION CABLE SET		

The present application list is a brief version. For the detailed information about the possibility of installation on a specific vehicle, please refer to our web-catalogue http://catalogo.facet.eu/

Vehicle	alim.	kW	Date	Engine	FUNCTIONS ON THE VEHICLE: A10	A20	A40	A50	A70	C10 - C30	C20	E01
840 i	Petrol	250	07/19-10/20	B58 B30 C								
Engine: All engines	Information: x 6, COIL ON PLUG									9.6532 C10		
840 i xDrive	Petrol	245	11/20->	B58 B30 C								
Engine: All engines	Information: x 6, COIL ON PLUG									9.6532 C10		
840 i xDrive	Petrol	250	07/19->	B58 B30 C								
Engine: All engines	Information: x 6, COIL ON PLUG									9.6532 C10		
850 CSi	Petrol	280	11/92-12/96	S70 B56 (56121)								
Engine: All engines	Information: Qty: 2, version Bosch						2.7530/8PHT	3.7573/19RS				
Engine: All engines	Information: to engine cylinder:1-6									9.6012 C10		
850 i, Ci	Petrol	220	01/90-08/94	M70 B50 (5012A)								
Engine: All engines	Information: Qty: 2, version Bosch						2.7530/8PHT	3.7573/19RS				
Engine: All engines	Information: to engine cylinder:1-6									9.6012 C10		
M8	Petrol	441	07/19->	S63 B44 B								
Engine: All engines	Information: x 8, DELPHI, COIL ON PLUG									9.6375 C10		
M8 Competition	Petrol	460	07/19->	S63 B44 B								
Engine: All engines	Information: x 8, DELPHI, COIL ON PLUG									9.6375 C10		
X1 I												
sDrive 16 i	Petrol	105	03/13-06/15	N20 B16 A								
Engine: All engines	Information: x 4, DELPHI, COIL ON PLUG									9.6375 C10		
sDrive 18 i	Petrol	100	03/10-06/15	N46 B20 B								
Engine: All engines	Information: x 4, ELDOR, COIL ON PLUG									9.6375 C10		
sDrive 18 i	Petrol	110	03/10-06/15	N46 B20 B, N46 B20 BD								
Engine: All engines	Information: x 4, ELDOR, COIL ON PLUG									9.6375 C10		
sDrive 18 i [CHN]	Petrol	135	01/13->	N20 B20 C								
Engine: All engines	Information: Qty: 4									9.6375 C10		
sDrive 20 i	Petrol	135	09/11-06/15	N20 B20 A								
Engine: All engines	Information: x 4, DELPHI, COIL ON PLUG									9.6375 C10		
sDrive 28 i [USA]	Petrol	180	01/09->	N20 B20 A								
Engine: All engines	Information: Qty: 4									9.6375 C10		
xDrive 20 i	Petrol	135	09/11-06/15	N20 B20 A								
Engine: All engines	Information: x 4, DELPHI, COIL ON PLUG									9.6375 C10		

A10	CONDENSER	A20	CONTACT SET	A40	DISTRIBUTOR CAP	A50	ROTOR	A70	PICK-UP
C10	COIL	C20	IGNITION MODULE	C30	ELECTRONIC IGNITION KIT	E01	IGNITION CABLE SET		

The present application list is a brief version. For the detailed information about the possibility of installation on a specific vehicle, please refer to our web-catalogue http://catalogo.facet.eu/

Vehicle	alim.	kW	Date	Engine	FUNCTIONS ON THE VEHICLE A10	A20	A40	A50	A70	C10 - C30	C20	E01
xDrive 25 i	Petrol	160	03/10-08/11	N52 B30 A						9.6375 C10		
xDrive 28 i	Petrol	180	03/11-06/15	N20 B20 A						9.6375 C10		
xDrive 28 i	Petrol	190	09/09-08/11	N52 B30 A						9.6375 C10		
xDrive 28 i	Petrol	194	03/10-06/11	N52 B30 A						9.6375 C10		
xDrive 35 i	Petrol	225	03/11-06/15	N55 B30 A						9.6375 C10		

Engine	Information
All engines	x 6, DELPHI, ELDOR, COIL ON PLUG
All engines	x 4, DELPHI, COIL ON PLUG
All engines	x 6, DELPHI, COIL ON PLUG
All engines	x 6, DELPHI, COIL ON PLUG
All engines	Qty: 6

X1 II

Vehicle	alim.	kW	Date	Engine	FUNCTIONS ON THE VEHICLE A10	A20	A40	A50	A70	C10 - C30	C20	E01
sDrive 18 i	Petrol	100	11/15->	B38 A15 A						9.6532 C10		
sDrive 18 i	Petrol	103	07/17->	B38 A15 A						9.6532 C10		
sDrive 20 i	Petrol	131	11/20->	B48 A20 A, B48 A20 F						9.6532 C10		
sDrive 20 i	Petrol	141	07/15->	B48 A20 A, B48 A20 F						9.6532 C10		
xDrive 20 i	Petrol	131	11/20->	B48 A20 A, B48 A20 F						9.6532 C10		
xDrive 20 i	Petrol	141	07/15->	B48 A20 B						9.6532 C10		
xDrive 25 e Plug-in-Hybrid	Petrol/ Electric	162	03/20->	B38 A15 A						9.6532 C10		
xDrive 25 e Plug-in-Hybrid	Petrol/ Electric	92	03/20->	B38 A15 A						9.6532 C10		
xDrive 25 i	Petrol	170	07/15->	B46 A20 B, B48 A20 B						9.6532 C10		

Engine	Information
All engines	x 3, COIL ON PLUG
All engines	x 3, COIL ON PLUG
All engines	x 4, COIL ON PLUG
All engines	x 4, COIL ON PLUG
All engines	x 4, COIL ON PLUG
All engines	x 3, COIL ON PLUG
All engines	x 3, COIL ON PLUG
All engines	x 4, COIL ON PLUG

A10	CONDENSER	A20	CONTACT SET	A40	DISTRIBUTOR CAP	A50	ROTOR	A70	PICK-UP
C10	COIL	C20	IGNITION MODULE	C30	ELECTRONIC IGNITION KIT	E01	IGNITION CABLE SET		

The present application list is a brief version. For the detailed information about the possibility of installation on a specific vehicle, please refer to our web-catalogue http://catalogo.facet.eu/

Vehicle	alim.	kW	Date	Engine	FUNCTIONS ON THE VEHICLE A10	A20	A40	A50	A70	C10 - C30	C20	E01

X2

				ENGINE
M35 i	Petrol	225	11/18->	B48 A20 E

Engine	Information	A10	A20	A40	A50	A70	C10 - C30	C20	E01
All engines	x 4, COIL ON PLUG						9.6532 C10		

				ENGINE
sDrive 18 i	Petrol	100	03/18->	B32 S15 A, B38 A15 A

Engine	Information	A10	A20	A40	A50	A70	C10 - C30	C20	E01
All engines	x 3, COIL ON PLUG						9.6532 C10		

				ENGINE
sDrive 18 i	Petrol	103	03/18->	B38 A15 A

Engine	Information	A10	A20	A40	A50	A70	C10 - C30	C20	E01
All engines	x 3, COIL ON PLUG						9.6532 C10		

				ENGINE
sDrive 20 i	Petrol	131	11/20->	B48 A20 A, B48 A20 F

Engine	Information	A10	A20	A40	A50	A70	C10 - C30	C20	E01
All engines	x 4, COIL ON PLUG						9.6532 C10		

				ENGINE
sDrive 20 i	Petrol	141	11/17->	B42 S20 A, B48 A20 A

Engine	Information	A10	A20	A40	A50	A70	C10 - C30	C20	E01
All engines	x 4, COIL ON PLUG						9.6532 C10		

				ENGINE
xDrive 20 i	Petrol	131	11/20->	B48 A20 A

Engine	Information	A10	A20	A40	A50	A70	C10 - C30	C20	E01
All engines	x 4, COIL ON PLUG						9.6532 C10		

				ENGINE
xDrive 20 i	Petrol	141	03/18-10/20	B48 A20 A

Engine	Information	A10	A20	A40	A50	A70	C10 - C30	C20	E01
All engines	x 4, COIL ON PLUG						9.6532 C10		

				ENGINE
xDrive 25 e Plug-in-Hybrid	Petrol/ Electric	162	03/20->	B38 A15 A

Engine	Information	A10	A20	A40	A50	A70	C10 - C30	C20	E01
All engines	x 3, COIL ON PLUG						9.6532 C10		

				ENGINE
xDrive 25 e Plug-in-Hybrid	Petrol/ Electric	92	03/20->	B38 A15 A

Engine	Information	A10	A20	A40	A50	A70	C10 - C30	C20	E01
All engines	x 3, COIL ON PLUG						9.6532 C10		

X3 I

				ENGINE
2.0 i	Petrol	110	07/05-08/08	N46 B20 B

Engine	Information	A10	A20	A40	A50	A70	C10 - C30	C20	E01
All engines	x 4, DELPHI, COIL ON PLUG						9.6375 C10		

				ENGINE
2.5 i	Petrol	141	03/04-07/06	M54 B25 (256S5), M54B256S5

Engine	Information	A10	A20	A40	A50	A70	C10 - C30	C20	E01
Eng. M54 B25 (256S5)	Qty: 6						9.6375 C10		
Eng. M54B256S5	x 6, DELPHI, COIL ON PLUG						9.6375 C10		

				ENGINE
2.5 si	Petrol	160	08/06-08/08	N52 B25 A, N52 B25 AF, N52 B25 BF

Engine	Information	A10	A20	A40	A50	A70	C10 - C30	C20	E01
All engines	x 6, DELPHI, COIL ON PLUG						9.6375 C10		

				ENGINE
2.5 si xDrive	Petrol	155	08/06-08/08	N52 B25 A, N52 B25 AF, N52 B25 BF

Engine	Information	A10	A20	A40	A50	A70	C10 - C30	C20	E01
All engines	x 6, DELPHI, COIL ON PLUG						9.6375 C10		

A10	CONDENSER	A20	CONTACT SET	A40	DISTRIBUTOR CAP	A50	ROTOR	A70	PICK-UP
C10	COIL	C20	IGNITION MODULE	C30	ELECTRONIC IGNITION KIT	E01	IGNITION CABLE SET		

The present application list is a brief version. For the detailed information about the possibility of installation on a specific vehicle, please refer to our web-catalogue http://catalogo.facet.eu/

Vehicle	alim.	kW	Date	Engine	FUNCTIONS ON THE VEHICLE A10	A20	A40	A50	A70	C10 - C30	C20	E01
3.0 i xDrive	Petrol	170	09/03-07/06	ENGINE M54 B30 (306S3), M54B306S3								
Engine	Information											
Eng. M54 B30 (306S3)	Qty: 6									9.6375 C10		
Eng. M54B306S3	x 6, DELPHI, COIL ON PLUG									9.6375 C10		
3.0 si	Petrol	194	09/06-08/08	ENGINE N52 B30 A, N52KB30								
Engine	Information											
All engines	x 6, DELPHI, ELDOR, COIL ON PLUG									9.6375 C10		
Eng. N52 B30 A	Qty: 6									9.6375 C10		
3.0 si	Petrol	200	08/06-08/08	ENGINE N52 B30 A, N52 B30 BF								
Engine	Information											
All engines	x 6, DELPHI, COIL ON PLUG									9.6375 C10		
xDrive 2.5si	Petrol	160	09/06->	ENGINE N52 B25 BF, N52B25B								
Engine	Information											
All engines	Qty: 6									9.6375 C10		
xDrive 20 i	Petrol	110	09/08-08/11	ENGINE N46 B20 B								
Engine	Information											
All engines	x 4, DELPHI, COIL ON PLUG									9.6375 C10		
xDrive 25 i	Petrol	155	09/08-08/10	ENGINE N52 B25 A, N52 B25 AF, N52 B25 BF								
Engine	Information											
All engines	x 6, DELPHI, COIL ON PLUG									9.6375 C10		
xDrive 25 i	Petrol	160	09/08-08/10	ENGINE N52 B25 A, N52 B25 AF, N52 B25 BF								
Engine	Information											
All engines	x 6, DELPHI, COIL ON PLUG									9.6375 C10		
xDrive 3.0si	Petrol	200	09/06->	ENGINE N52 B30 B, N52 B30 BF								
Engine	Information											
All engines	Qty: 6									9.6375 C10		
xDrive 30 i	Petrol	200	09/08-08/10	ENGINE N52 B30 A, N52 B30 BF								
Engine	Information											
All engines	x 6, DELPHI, COIL ON PLUG									9.6375 C10		
X3 II												
sDrive 20 i	Petrol	125	04/14-08/17	ENGINE N20 B16 A								
Engine	Information											
All engines	x 4, DELPHI, COIL ON PLUG									9.6375 C10		
sDrive 20 i	Petrol	135	04/14-08/17	ENGINE N20 B20 A								
Engine	Information											
All engines	x 4, DELPHI, COIL ON PLUG									9.6375 C10		
sDrive 28 i [USA]	Petrol	135	01/13->	ENGINE N20 B20 A								
Engine	Information											
All engines	Qty: 4									9.6375 C10		
xDrive 20 i	Petrol	135	10/11-08/17	ENGINE N20 B20 A								
Engine	Information											
All engines	x 4, DELPHI, COIL ON PLUG									9.6375 C10		
xDrive 28 i	Petrol	180	04/12-08/17	ENGINE N20 B20 A								
Engine	Information											
All engines	x 4, DELPHI, COIL ON PLUG									9.6375 C10		

A10	CONDENSER	A20	CONTACT SET	A40	DISTRIBUTOR CAP	A50	ROTOR	A70	PICK-UP
C10	COIL	C20	IGNITION MODULE	C30	ELECTRONIC IGNITION KIT	E01	IGNITION CABLE SET		

The present application list is a brief version. For the detailed information about the possibility of installation on a specific vehicle, please refer to our web-catalogue http://catalogo.facet.eu/

Vehicle	alim.	kW	Date	Engine	FUNCTIONS ON THE VEHICLE							
					A10	A20	A40	A50	A70	C10 - C30	C20	E01
xDrive 28 i	Petrol	190	01/11-10/12	ENGINE: N52 B30 A, N52 B30 AF, N52 B30 BF								
Engine: All engines	Information: x 6, DELPHI, ELDOR, COIL ON PLUG									9.6375 C10		
xDrive 35 i	Petrol	225	09/10-08/17	ENGINE: N55 B30 A								
Engine: All engines	Information: x 6, DELPHI, COIL ON PLUG									9.6375 C10		
X3 III												
M	Petrol	353	03/19->	ENGINE: S58 B30 A								
Engine: All engines	Information: x 6, COIL ON PLUG									9.6532 C10		
M Competition	Petrol	375	03/19->	ENGINE: S58 B30 A								
Engine: All engines	Information: x 6, COIL ON PLUG									9.6532 C10		
sDrive 20 i	Petrol	135	12/17->	ENGINE: B48 B20 A								
Engine: All engines	Information: x 4, COIL ON PLUG									9.6532 C10		
sDrive 20 i 1.6	Petrol	125	12/17->	ENGINE: B48 B16 A								
Engine: All engines	Information: x 4, COIL ON PLUG									9.6532 C10		
xDrive 20 i	Petrol	135	12/17->	ENGINE: B48 B20 A								
Engine: All engines	Information: x 4, COIL ON PLUG									9.6532 C10		
xDrive 20 i Mild Hybrid	Petrol/ Electric	135	08/21->	ENGINE: B48 B20 B								
Engine: All engines	Information: x 4, COIL ON PLUG									9.6532 C10		
xDrive 30 e Plug-in-Hybrid	Petrol/ Electric	120	12/19->	ENGINE: B48 B20 A								
Engine: All engines	Information: x 4, COIL ON PLUG									9.6532 C10		
xDrive 30 e Plug-in-Hybrid	Petrol/ Electric	135	12/19->	ENGINE: B46 B20 B, B48 B20 A								
Engine: All engines	Information: x 4, COIL ON PLUG									9.6532 C10		
xDrive 30 e Plug-in-Hybrid	Petrol/ Electric	170	12/19->	ENGINE: B48 B20 A								
Engine: All engines	Information: x 4, COIL ON PLUG									9.6532 C10		
xDrive 30 e Plug-in-Hybrid	Petrol/ Electric	185	12/19->	ENGINE: B46 B20 B, B48 B20 A								
Engine: All engines	Information: x 4, COIL ON PLUG									9.6532 C10		
xDrive 30 i	Petrol	183	08/17->	ENGINE: B48 B20 B								
Engine: All engines	Information: x 4, COIL ON PLUG									9.6532 C10		

A10	CONDENSER	A20	CONTACT SET	A40	DISTRIBUTOR CAP	A50	ROTOR	A70	PICK-UP
C10	COIL	C20	IGNITION MODULE	C30	ELECTRONIC IGNITION KIT	E01	IGNITION CABLE SET		

The present application list is a brief version. For the detailed information about the possibility of installation on a specific vehicle, please refer to our web-catalogue http://catalogo.facet.eu/

Vehicle	alim.	kW	Date	Engine	FUNCTIONS ON THE VEHICLE							
					A10	A20	A40	A50	A70	C10 - C30	C20	E01
xDrive 30 i	Petrol	185	08/17->	ENGINE B46 B20 B, B48 B20 B								
Eng. B46 B20 B	COIL ON PLUG, Qty: 4									9.6532 C10		
Eng. B48 B20 B	x 4, COIL ON PLUG									9.6532 C10		
xDrive 30 i Mild Hybrid	Petrol/ Electric	180	08/21->	ENGINE B48 B20 B								
All engines	x 4, COIL ON PLUG									9.6532 C10		
xDrive M40 i	Petrol	260	09/18-08/19	ENGINE B58 B30 A								
All engines	x 6, COIL ON PLUG									9.6532 C10		
xDrive M40 i	Petrol	265	08/17->	ENGINE B58 B30 A								
All engines	x 6, COIL ON PLUG									9.6532 C10		
xDrive M40 i	Petrol	285	09/19->	ENGINE B58 B30 B								
All engines	x 6, COIL ON PLUG									9.6532 C10		
X4 I												
M 40 i	Petrol	265	12/15-03/18	ENGINE N55 B30 A								
All engines	x 6, DELPHI, COIL ON PLUG									9.6375 C10		
xDrive 20 i	Petrol	135	04/14-03/18	ENGINE N20 B20 A								
All engines	x 4, DELPHI, COIL ON PLUG									9.6375 C10		
xDrive 28 i	Petrol	180	04/14-03/18	ENGINE N20 B20 A								
All engines	x 4, DELPHI, COIL ON PLUG									9.6375 C10		
xDrive 35 i	Petrol	225	04/14-03/18	ENGINE N55 B30 A								
All engines	x 6, DELPHI, COIL ON PLUG									9.6375 C10		
X4 II												
M	Petrol	353	03/19->	ENGINE S58 B30 A								
All engines	x 6, COIL ON PLUG									9.6532 C10		
M Competition	Petrol	375	03/19->	ENGINE S58 B30 A								
All engines	x 6, COIL ON PLUG									9.6532 C10		
M40 i xDrive	Petrol	260	04/18-08/19	ENGINE B58 B30 A								
All engines	x 6, COIL ON PLUG									9.6532 C10		
M40 i xDrive	Petrol	265	04/18->	ENGINE B58 B30 A								
All engines	x 6, COIL ON PLUG									9.6532 C10		
M40 i xDrive	Petrol	285	09/19->	ENGINE B58 B30 B								
All engines	x 6, COIL ON PLUG									9.6532 C10		

A10	CONDENSER	A20	CONTACT SET	A40	DISTRIBUTOR CAP	A50	ROTOR	A70	PICK-UP
C10	COIL	C20	IGNITION MODULE	C30	ELECTRONIC IGNITION KIT	E01	IGNITION CABLE SET		

The present application list is a brief version. For the detailed information about the possibility of installation on a specific vehicle, please refer to our web-catalogue http://catalogo.facet.eu/

Vehicle	alim.	kW	Date	Engine	FUNCTIONS ON THE VEHICLE A10	A20	A40	A50	A70	C10 - C30	C20	E01
xDrive 20 i	Petrol	135	04/18->	ENGINE B48 B20 A								
Engine	Information											
All engines	x 4, COIL ON PLUG									9.6532 C10		
xDrive 20 i Mild Hybrid	Petrol/ Electric	135	08/21->	ENGINE B46 B20 B, B48 B20 A								
Engine	Information											
All engines	x 4, COIL ON PLUG									9.6532 C10		
xDrive 30 i	Petrol	183	04/18->	ENGINE B48 B20 B								
Engine	Information											
All engines	x 4, COIL ON PLUG									9.6532 C10		
xDrive 30 i	Petrol	185	04/18->	ENGINE B48 B20 B								
Engine	Information											
All engines	x 4, COIL ON PLUG									9.6532 C10		
xDrive 30 i Mild Hybrid	Petrol/ Electric	180	07/21->	ENGINE B46 B20 B, B48 B20 B								
Engine	Information											
All engines	x 4, COIL ON PLUG									9.6532 C10		
X5 I												
3.0 i	Petrol	163	05/00-12/06	ENGINE M54 B30 (306S3)								
Engine	Information											
All engines	->year 31/10/02, without spark plug connector, Qty: 6									9.6252 C10		
All engines	->year 31/10/02, incl. spark plug connector, Qty: 6									9.6313 C10		
All engines	01/11/02 ->, Qty: 6									9.6375 C10		
3.0 i	Petrol	170	04/00-10/06	ENGINE 5CNG, M54 B30 (306S3)								
Engine	Information											
Eng. M54 B30 (306S3)	->year 31/10/02, without spark plug connector, Qty: 6									9.6252 C10		
Eng. M54 B30 (306S3)	->year 31/10/02, incl. spark plug connector, Qty: 6									9.6313 C10		
Eng. 5CNG	x 6, DELPHI, COIL ON PLUG									9.6375 C10		
Eng. M54 B30 (306S3)	01/11/02 ->, Qty: 6									9.6375 C10		
4.4 i	Petrol	210	01/00-09/03	ENGINE M62 B44 (448S2), M62B448S2								
Engine	Information											
Eng. M62 B44 (448S2)	without spark plug connector, Qty: 8									9.6252 C10		
Eng. M62B448S2	x 8, BREMI, COIL ON PLUG									9.6252 C10		
Eng. M62 B44 (448S2)	incl. spark plug connector, Qty: 8									9.6313 C10		
4.4 i	Petrol	235	10/03-10/06	ENGINE N62 B44, N62 B44 A								
Engine	Information											
Eng. N62 B44	Qty: 8									9.6375 C10		
Eng. N62 B44 A	x 8, DELPHI, ELDOR, COIL ON PLUG									9.6375 C10		
4.6 is	Petrol	255	10/01-09/03	ENGINE M62 B46 (468S1), M62B468S1								
Engine	Information											
Eng. M62 B46 (468S1)	without spark plug connector, Qty: 8									9.6252 C10		
Eng. M62B468S1	x 8, BREMI, COIL ON PLUG									9.6252 C10		
Eng. M62 B46 (468S1)	incl. spark plug connector, Qty: 8									9.6313 C10		
4.8 is	Petrol	265	04/04-09/06	ENGINE N62 B48 A								
Engine	Information											
All engines	x 8, DELPHI, ELDOR, COIL ON PLUG									9.6375 C10		

A10	CONDENSER	A20	CONTACT SET	A40	DISTRIBUTOR CAP	A50	ROTOR	A70	PICK-UP
C10	COIL	C20	IGNITION MODULE	C30	ELECTRONIC IGNITION KIT	E01	IGNITION CABLE SET		

The present application list is a brief version. For the detailed information about the possibility of installation on a specific vehicle, please refer to our web-catalogue http://catalogo.facet.eu/

Vehicle	alim.	kW	Date	Engine	FUNCTIONS ON THE VEHICLE A10	A20	A40	A50	A70	C10 - C30	C20	E01

X5 II

				ENGINE
3.0 si	Petrol	**200**	10/06-09/08	**N52 B30 A, N52 B30 AF, N52 B30 B, N52 B30 BF**

Engine	Information	A10	A20	A40	A50	A70	C10 - C30		C20	E01
Eng. N52 B30 A, N52 B30 AF, N52 B30 BF	x 6, DELPHI, COIL ON PLUG						9.6375	C10		
Eng. N52 B30 B	Qty: 6						9.6375	C10		

				ENGINE
4.8 i xDrive	Petrol	**261**	10/06-09/08	**N62 B48 B**

Engine	Information	A10	A20	A40	A50	A70	C10 - C30		C20	E01
All engines	x 8, DELPHI, COIL ON PLUG						9.6375	C10		

				ENGINE
M	Petrol	**408**	07/09-07/13	**S63 B44 A**

Engine	Information	A10	A20	A40	A50	A70	C10 - C30		C20	E01
All engines	x 8, DELPHI, ELDOR, COIL ON PLUG						9.6375	C10		

				ENGINE
xDrive 30 i	Petrol	**171**	09/08-12/10	**N52 B30 A**

Engine	Information	A10	A20	A40	A50	A70	C10 - C30		C20	E01
All engines	Qty: 6						9.6375	C10		

				ENGINE
xDrive 30 i	Petrol	**172**	02/07-12/12	**N52 B30 A**

Engine	Information	A10	A20	A40	A50	A70	C10 - C30		C20	E01
All engines	x 4, DELPHI, COIL ON PLUG						9.6375	C10		

				ENGINE
xDrive 30 i	Petrol	**200**	10/08-03/10	**N52 B30 A**

Engine	Information	A10	A20	A40	A50	A70	C10 - C30		C20	E01
All engines	x 6, DELPHI, COIL ON PLUG						9.6375	C10		

				ENGINE
xDrive 35 i	Petrol	**225**	04/10-07/13	**N55 B30 A**

Engine	Information	A10	A20	A40	A50	A70	C10 - C30		C20	E01
All engines	x 6, DELPHI, COIL ON PLUG						9.6375	C10		

				ENGINE
xDrive 35 i	Petrol	**235**	02/12-06/13	**N55 B30 A**

Engine	Information	A10	A20	A40	A50	A70	C10 - C30		C20	E01
All engines	x 6, DELPHI, COIL ON PLUG						9.6375	C10		

				ENGINE
xDrive 40 i	Petrol	**225**	01/12-06/13	**N55 B30 A**

Engine	Information	A10	A20	A40	A50	A70	C10 - C30		C20	E01
All engines	x 6, DELPHI, COIL ON PLUG						9.6375	C10		

				ENGINE
xDrive 48 i	Petrol	**261**	10/08-03/10	**N62 B48 B**

Engine	Information	A10	A20	A40	A50	A70	C10 - C30		C20	E01
All engines	x 8, DELPHI, COIL ON PLUG						9.6375	C10		

				ENGINE
xDrive 50 i	Petrol	**300**	04/10-07/13	**N63 B44 A**

Engine	Information	A10	A20	A40	A50	A70	C10 - C30		C20	E01
All engines	x 8, DELPHI, ELDOR, COIL ON PLUG						9.6375	C10		

X5 III

				ENGINE
M	Petrol	**423**	12/14-07/18	**S63 B44 B**

Engine	Information	A10	A20	A40	A50	A70	C10 - C30		C20	E01
All engines	x 8, BOSCH, DELPHI, COIL ON PLUG						9.6375	C10		

				ENGINE
sDrive 35 i [USA]	Petrol	**225**	01/13->	**N55 B30 A**

Engine	Information	A10	A20	A40	A50	A70	C10 - C30		C20	E01
All engines	Qty: 6						9.6375	C10		

				ENGINE
xDrive 28 i	Petrol	**180**	06/15-07/18	**N20 B20 A**

Engine	Information	A10	A20	A40	A50	A70	C10 - C30		C20	E01
All engines	x 4, DELPHI, COIL ON PLUG						9.6375	C10		

A10	CONDENSER	**A20**	CONTACT SET	**A40**	DISTRIBUTOR CAP	**A50**	ROTOR	**A70**	PICK-UP
C10	COIL	**C20**	IGNITION MODULE	**C30**	ELECTRONIC IGNITION KIT	**E01**	IGNITION CABLE SET		

The present application list is a brief version. For the detailed information about the possibility of installation on a specific vehicle, please refer to our web-catalogue http://catalogo.facet.eu/

Vehicle	alim.	kW	Date	Engine	FUNCTIONS ON THE VEHICLE							
					A10	A20	A40	A50	A70	C10 - C30	C20	E01
xDrive 35 i	Petrol	225	12/13-07/18	N55 B30 A								
All engines	x 6, DELPHI, COIL ON PLUG									9.6375 C10		
xDrive 35 i	Petrol	240	12/13-07/18	N55 B30 A								
All engines	x 6, DELPHI, COIL ON PLUG									9.6375 C10		
xDrive 40e	Petrol/ Electric	155	08/15-07/18	N20 B20 A								
All engines	x 4, DELPHI, COIL ON PLUG									9.6375 C10		
xDrive 40e	Petrol/ Electric	180	08/15-07/18	N20 B20 A								
All engines	x 4, DELPHI, COIL ON PLUG									9.6375 C10		
xDrive 40e	Petrol/ Electric	205	08/15-07/18	N20 B20 A								
All engines	x 4, DELPHI, COIL ON PLUG									9.6375 C10		
xDrive 40e	Petrol/ Electric	230	08/15-07/18	N20 B20 A								
All engines	x 4, DELPHI, COIL ON PLUG									9.6375 C10		
xDrive 50 i	Petrol	330	08/13-07/18	N63 B44 B								
All engines	x 8, BOSCH, DELPHI, COIL ON PLUG									9.6375 C10		
xDrive 50i	Petrol	0	07/13->	N63 B40 A								
All engines	Qty: 8									9.6375 C10		
X5 IV												
M	Petrol	441	12/19->	S63 B44 B								
All engines	x 8, DELPHI, COIL ON PLUG									9.6375 C10		
M Competition	Petrol	460	12/19->	S63 B44 B								
All engines	x 8, DELPHI, COIL ON PLUG									9.6375 C10		
xDrive 40 i	Petrol	250	08/18->	B58 B30 C								
All engines	x 6, COIL ON PLUG									9.6532 C10		
xDrive 40 i Mild-Hybrid	Petrol/ Electric	245	12/20->	B58 B30 C								
All engines	x 6, COIL ON PLUG									9.6532 C10		
xDrive 45 e Plug-in-Hybrid	Petrol/ Electric	155	06/19->	B58 B30 C								
All engines	x 6, COIL ON PLUG									9.6532 C10		

A10	CONDENSER	A20	CONTACT SET	A40	DISTRIBUTOR CAP	A50	ROTOR	A70	PICK-UP
C10	COIL	C20	IGNITION MODULE	C30	ELECTRONIC IGNITION KIT	E01	IGNITION CABLE SET		

The present application list is a brief version. For the detailed information about the possibility of installation on a specific vehicle, please refer to our web-catalogue http://catalogo.facet.eu/

Vehicle	alim.	kW	Date	Engine	FUNCTIONS ON THE VEHICLE A10	A20	A40	A50	A70	C10 - C30	C20	E01
xDrive 45 e Plug-in-Hybrid	Petrol/ Electric	210	06/19->	B58 B30 C								
All engines	x 6, COIL ON PLUG									9.6532 C10		
xDrive 45 e Plug-in-Hybrid	Petrol/ Electric	235	06/19->	B58 B30 C								
All engines	x 6, COIL ON PLUG									9.6532 C10		
xDrive 45 e Plug-in-Hybrid	Petrol/ Electric	290	06/19->	B58 B30 C								
All engines	x 6, COIL ON PLUG									9.6532 C10		
xDrive 50 i	Petrol	340	08/18->	N63 B44 D								
All engines	x 8, DELPHI, COIL ON PLUG									9.6375 C10		
X6 I												
35 i	Petrol	225	05/08-08/08	N54 B30 A								
All engines	Qty: 6									9.6375 C10		
50 i	Petrol	300	05/08-06/14	N63 B44 A								
All engines	Qty: 8									9.6375 C10		
ActiveHybrid	Petrol/ Electric	357	01/09-10/11	N63 B44 A								
All engines	x 8, DELPHI, ELDOR, COIL ON PLUG									9.6375 C10		
ActiveHybrid xDrive	Petrol/ Electric	300	01/09-10/11	N63 B44 A								
All engines	x 8, DELPHI, ELDOR, COIL ON PLUG									9.6375 C10		
M	Petrol	408	07/09-07/14	S63 B44 A								
All engines	x 8, DELPHI, ELDOR, COIL ON PLUG									9.6375 C10		
xDrive 35 i	Petrol	224	01/08-06/14	N54 B30 A, N55 B30 A								
All engines	x 6, DELPHI, ELDOR, COIL ON PLUG									9.6375 C10		
xDrive 35 i	Petrol	225	01/08-07/14	N54 B30 A, N55 B30 A								
All engines	x 6, DELPHI, ELDOR, COIL ON PLUG									9.6375 C10		
xDrive 35 i	Petrol	235	07/09-06/14	N55 B30 A								
All engines	x 6, DELPHI, COIL ON PLUG									9.6375 C10		
xDrive 35 i	Petrol	240	06/07-03/10	N54 B30 A								
All engines	x 6, DELPHI, ELDOR, COIL ON PLUG									9.6375 C10		
xDrive 40 i	Petrol	235	01/12->	N55 B30 A								
All engines	Qty: 6									9.6375 C10		

A10	CONDENSER	A20	CONTACT SET	A40	DISTRIBUTOR CAP	A50	ROTOR	A70	PICK-UP
C10	COIL	C20	IGNITION MODULE	C30	ELECTRONIC IGNITION KIT	E01	IGNITION CABLE SET		

The present application list is a brief version. For the detailed information about the possibility of installation on a specific vehicle, please refer to our web-catalogue http://catalogo.facet.eu/

Vehicle	alim.	kW	Date	Engine	FUNCTIONS ON THE VEHICLE: A10	A20	A40	A50	A70	C10 - C30	C20	E01
xDrive 50 i	Petrol	300	07/08-07/14	N63 B44 A						9.6375 C10		
Engine: All engines — Information: x 8, DELPHI, ELDOR, COIL ON PLUG												
xDrive 50 i	Petrol	330	10/07-06/14	N63 B44 A						9.6375 C10		
Engine: All engines — Information: x 8, DELPHI, ELDOR, COIL ON PLUG												
X6 II												
35 i [USA]	Petrol	225	08/14->	N55 B30 A						9.6375 C10		
Engine: All engines — Information: Qty: 6												
M	Petrol	423	12/14-07/19	S63 B44 B						9.6375 C10		
Engine: All engines — Information: x 8, BOSCH, DELPHI, COIL ON PLUG												
xDrive 35 i	Petrol	225	08/14-07/19	N55 B30 A						9.6375 C10		
Engine: All engines — Information: x 6, DELPHI, COIL ON PLUG												
xDrive 35 i	Petrol	240	08/14-07/19	N55 B30 A						9.6375 C10		
Engine: All engines — Information: x 6, DELPHI, COIL ON PLUG												
xDrive 50 i	Petrol	0	08/14->	N63 B40 A						9.6375 C10		
Engine: All engines — Information: Qty: 8												
xDrive 50 i	Petrol	330	08/14-07/19	N63 B44 B						9.6375 C10		
Engine: All engines — Information: x 8, BOSCH, DELPHI, COIL ON PLUG												
xDrive 50 i [USA]	Petrol	330	08/14->	N63 B44 B						9.6375 C10		
Engine: All engines — Information: Qty: 8												
X6 III												
M	Petrol	441	12/19->	S63 B44 B						9.6375 C10		
Engine: All engines — Information: x 8, DELPHI, COIL ON PLUG												
M Competition	Petrol	460	12/19->	S63 B44 B						9.6375 C10		
Engine: All engines — Information: x 8, DELPHI, COIL ON PLUG												
xDrive 40 i	Petrol	250	08/19->	B58 B30 C						9.6532 C10		
Engine: All engines — Information: x 6, COIL ON PLUG												
xDrive 40 i Mild-Hybrid	Petrol/ Electric	245	12/20->	B58 B30 C						9.6532 C10		
Engine: All engines — Information: x 6, COIL ON PLUG												
X7												
xDrive 40 i	Petrol	250	03/19->	B58 B30 C						9.6532 C10		
Engine: All engines — Information: x 6, COIL ON PLUG												

A10	CONDENSER	A20	CONTACT SET	A40	DISTRIBUTOR CAP	A50	ROTOR	A70	PICK-UP
C10	COIL	C20	IGNITION MODULE	C30	ELECTRONIC IGNITION KIT	E01	IGNITION CABLE SET		

The present application list is a brief version. For the detailed information about the possibility of installation on a specific vehicle, please refer to our web-catalogue http://catalogo.facet.eu/

Vehicle	alim.	kW	Date	Engine	FUNCTIONS ON THE VEHICLE A10	A20	A40	A50	A70	C10 - C30	C20	E01
xDrive 40 i Mild-Hybrid	Petrol/ Electric	245	12/20->	B58 B30 C								
All engines			x 6, COIL ON PLUG							9.6532 C10		
xDrive M 50 i	Petrol	390	07/19->	N63 B44 D								
All engines			x 8, DELPHI, COIL ON PLUG							9.6375 C10		
Z1												
2.5	Petrol	125	06/88-06/91	M20 B25 (256K1)								
All engines			version Bosch				2.7530/8PHT	3.7573/19RS				
All engines										9.6012 C10		
Z3												
1.8 i	Petrol	85	10/95-10/98	M43 B18 (184E2)								
All engines			without marten protection									4.8900
1.9 i	Petrol	103	11/95-03/99	M44 B19 (194S1)								
All engines												4.9921
1.9 i	Petrol	85	01/99-01/03	M43 B19 (194E1)								
All engines			without marten protection									4.8900
1.9 i	Petrol	87	07/98-01/03	M43 B19 (194E1)								
All engines			without marten protection									4.8900
2.0 i	Petrol	110	04/99-01/03	M52 B20 (206S4)								
All engines			without spark plug connector, Qty: 6							9.6252 C10		
All engines			incl. spark plug connector, Qty: 6							9.6313 C10		
2.2 i	Petrol	120	08/00-01/03	M54 B22 (226S1)								
All engines			without spark plug connector, Qty: 6							9.6252 C10		
All engines			incl. spark plug connector, Qty: 6							9.6313 C10		
2.2 i	Petrol	125	10/00-06/02	M54 B22 (226S1)								
All engines			without spark plug connector, Qty: 6							9.6252 C10		
All engines			incl. spark plug connector, Qty: 6							9.6313 C10		
2.8 i	Petrol	142	11/96-05/00	M52 B28 (286S1)								
All engines			without spark plug connector, Qty: 6							9.6252 C10		
All engines			incl. spark plug connector, Qty: 6							9.6313 C10		
2.8 i	Petrol	143	01/96-07/00	M52 B28 (286S1), M52 B28 (286S2)								
All engines			without spark plug connector, Qty: 6							9.6252 C10		
All engines			incl. spark plug connector, Qty: 6							9.6313 C10		
3.0 i	Petrol	170	06/00-06/03	M54 B30 (306S3)								
All engines			without spark plug connector, Qty: 6							9.6252 C10		

A10	CONDENSER	A20	CONTACT SET	A40	DISTRIBUTOR CAP	A50	ROTOR	A70	PICK-UP
C10	COIL	C20	IGNITION MODULE	C30	ELECTRONIC IGNITION KIT	E01	IGNITION CABLE SET		

The present application list is a brief version. For the detailed information about the possibility of installation on a specific vehicle, please refer to our web-catalogue http://catalogo.facet.eu/

Vehicle	alim.	kW	Date	Engine	FUNCTIONS ON THE VEHICLE: A10	A20	A40	A50	A70	C10 - C30	C20	E01
3.0 i	Petrol	170	06/00-06/03	M54 B30 (306S3)						9.6313 C10		
M	Petrol	236	02/98-06/01	S50 B32 (326S1)						9.6252 C10 9.6313 C10		
M	Petrol	239	06/01-06/03	S54 B32 (326S4)						9.6375 C10		
M 3.2	Petrol	236	01/97-06/00	S50 B32 (326S1)						9.6252 C10 9.6313 C10		
M 3.2	Petrol	239	06/01-01/03	S54 B32 (326S4)						9.6375 C10		
Z4 I												
2.0 i	Petrol	110	03/05-02/09	N46 B20 A						9.6375 C10		
2.2 i	Petrol	125	10/03-10/05	M54 B22 (226S1)						9.6375 C10		
2.5 i	Petrol	130	01/06->	N52 B25 B						9.6375 C10		
2.5 i	Petrol	141	12/02-12/05	M54 B25 (256S5)						9.6375 C10		
2.5 si	Petrol	160	01/06->	N52 B25 B						9.6375 C10		
3.0 i	Petrol	0	01/06->	N52 B30 A						9.6375 C10		
3.0 i	Petrol	170	12/02-12/05	M54 B30 (306S3)						9.6375 C10		
3.0 si	Petrol	195	01/06->	N52 B30 B						9.6375 C10		
M	Petrol	252	01/06-08/08	S54 B32 (326S4)						9.6375 C10		

Engine	Information
All engines	incl. spark plug connector, Qty: 6
All engines	without spark plug connector, Qty: 6
All engines	Qty: 6
All engines	Qty: 4

A10	CONDENSER	A20	CONTACT SET	A40	DISTRIBUTOR CAP	A50	ROTOR	A70	PICK-UP
C10	COIL	C20	IGNITION MODULE	C30	ELECTRONIC IGNITION KIT	E01	IGNITION CABLE SET		

The present application list is a brief version. For the detailed information about the possibility of installation on a specific vehicle, please refer to our web-catalogue http://catalogo.facet.eu/

Vehicle	alim.	kW	Date	Engine	FUNCTIONS ON THE VEHICLE							
					A10	A20	A40	A50	A70	C10 - C30	C20	E01

Z4 II

				ENGINE
sDrive30i	Petrol	190	05/09->	N52 B30 B, N52 B30 BF

Engine	Information	A10	A20	A40	A50	A70	C10 - C30		C20	E01
All engines	Qty: 6						9.6375	C10		

Z8

				ENGINE
4.9	Petrol	294	01/00-12/03	S62 B50 (508S1)

Engine	Information	A10	A20	A40	A50	A70	C10 - C30		C20	E01
All engines	without spark plug connector, Qty: 8						9.6252	C10		
All engines	incl. spark plug connector, Qty: 8						9.6313	C10		

A10	CONDENSER	A20	CONTACT SET	A40	DISTRIBUTOR CAP	A50	ROTOR	A70	PICK-UP
C10	COIL	C20	IGNITION MODULE	C30	ELECTRONIC IGNITION KIT	E01	IGNITION CABLE SET		

The present application list is a brief version. For the detailed information about the possibility of installation on a specific vehicle, please refer to our web-catalogue http://catalogo.facet.eu/

Vehicle	alim.	kW	Date	Engine	FUNCTIONS ON THE VEHICLE							
					A10	A20	A40	A50	A70	C10 - C30	C20	E01

EQUIPE

				ENGINE
1300 GT	Petrol	56	01/67-12/70	--

Engine	Information	A10	A20	A40	A50	A70	C10 - C30	C20	E01
All engines				2.8075	3.8106				

				ENGINE
2.0 GT	Petrol	77	01/68-12/71	--

Engine	Information	A10	A20	A40	A50	A70	C10 - C30	C20	E01
All engines					3.7590, 3.8107				

A10	CONDENSER	**A20**	CONTACT SET	**A40**	DISTRIBUTOR CAP	**A50**	ROTOR	**A70**	PICK-UP
C10	COIL	**C20**	IGNITION MODULE	**C30**	ELECTRONIC IGNITION KIT	**E01**	IGNITION CABLE SET		

The present application list is a brief version. For the detailed information about the possibility of installation on a specific vehicle, please refer to our web-catalogue http://catalogo.facet.eu/

Vehicle	alim.	kW	Date	Engine	FUNCTIONS ON THE VEHICLE							
					A10	A20	A40	A50	A70	C10 - C30	C20	E01

ISABELLA

				ENGINE
1.5	Petrol	55	06/54-02/62	--

Engine	Information	A10	A20	A40	A50	A70	C10 - C30	C20	E01
All engines					3.7518RS				

A10	CONDENSER	**A20**	CONTACT SET	**A40**	DISTRIBUTOR CAP	**A50**	ROTOR	**A70**	PICK-UP
C10	COIL	**C20**	IGNITION MODULE	**C30**	ELECTRONIC IGNITION KIT	**E01**	IGNITION CABLE SET		

The present application list is a brief version. For the detailed information about the possibility of installation on a specific vehicle, please refer to our web-catalogue http://catalogo.facet.eu/

Vehicle	alim.	kW	Date	Engine	FUNCTIONS ON THE VEHICLE							
					A10	A20	A40	A50	A70	C10 - C30	C20	E01
AVEO I												
				ENGINE								
1.2	Petrol	53	03/05->	B12S1, F12S3, LQ5								
Engine	Information				A10	A20	A40	A50	A70	C10 - C30	C20	E01
All engines												4.7006
				ENGINE								
1.2	Petrol	55	01/08->	B12D1, LMU								
Engine	Information				A10	A20	A40	A50	A70	C10 - C30	C20	E01
All engines												4.7249
				ENGINE								
1.2	Petrol	56	01/07-09/12	B12S1, LY4								
Engine	Information				A10	A20	A40	A50	A70	C10 - C30	C20	E01
All engines												4.7006
				ENGINE								
1.2	Petrol	62	01/08->	B12D1, LMU								
Engine	Information				A10	A20	A40	A50	A70	C10 - C30	C20	E01
All engines												4.7249
				ENGINE								
1.2 LPG	Petrol/ Liquified Petro-leum Gas (LPG)	62	04/08->	B12D1, LMU								
Engine	Information				A10	A20	A40	A50	A70	C10 - C30	C20	E01
All engines												4.7249
				ENGINE								
1.4	Petrol	61	03/05->	F14S3								
Engine	Information				A10	A20	A40	A50	A70	C10 - C30	C20	E01
All engines												4.9731
				ENGINE								
1.4	Petrol	69	03/05-05/13	F14D3, L14								
Engine	Information				A10	A20	A40	A50	A70	C10 - C30	C20	E01
All engines												4.9680
				ENGINE								
1.4	Petrol	74	04/08->	A 14 XER								
Engine	Information				A10	A20	A40	A50	A70	C10 - C30	C20	E01
All engines										9.6447 C10		
				ENGINE								
1.4 16V	Petrol	69	05/03-05/08	F14D3								
Engine	Information				A10	A20	A40	A50	A70	C10 - C30	C20	E01
All engines												4.9680
				ENGINE								
1.4 CNG	CNG	69	01/10->	L95								
Engine	Information				A10	A20	A40	A50	A70	C10 - C30	C20	E01
All engines												4.9680
				ENGINE								
1.5	Petrol	62	01/05->	F15S3, LX6								
Engine	Information				A10	A20	A40	A50	A70	C10 - C30	C20	E01
Eng. LX6												4.7249
Eng. F15S3												4.9731
				ENGINE								
1.6	Petrol	76	05/05->	F16D3, LXV								
Engine	Information				A10	A20	A40	A50	A70	C10 - C30	C20	E01
All engines												4.9680
				ENGINE								
1.6	Petrol	77	09/03-12/08	A16DMS, LXT, LXV								
Engine	Information				A10	A20	A40	A50	A70	C10 - C30	C20	E01
All engines												4.9680

A10	CONDENSER	**A20**	CONTACT SET	**A40**	DISTRIBUTOR CAP	**A50**	ROTOR	**A70**	PICK-UP
C10	COIL	**C20**	IGNITION MODULE	**C30**	ELECTRONIC IGNITION KIT	**E01**	IGNITION CABLE SET		

The present application list is a brief version. For the detailed information about the possibility of installation on a specific vehicle, please refer to our web-catalogue http://catalogo.facet.eu/

Vehicle	alim.	kW	Date	Engine	FUNCTIONS ON THE VEHICLE A10	A20	A40	A50	A70	C10 - C30	C20	E01

AVEO II

				ENGINE
1.2	Petrol	51	03/11->	LWD

Engine	Information	A10	A20	A40	A50	A70	C10 - C30		C20	E01
All engines							9.6447	C10		
All engines	x 1, x 4, COIL ON PLUG						9.6447	C10		

				ENGINE
1.2	Petrol	63	03/11->	LDC

Engine	Information	A10	A20	A40	A50	A70	C10 - C30		C20	E01
All engines							9.6447	C10		
All engines	x 1, version 1, version 2, COIL ON PLUG						9.6447	C10		

				ENGINE
1.2 LPG	Petrol/ Liquified Petro-leum Gas (LPG)	63	11/12-12/15	LDC

Engine	Information	A10	A20	A40	A50	A70	C10 - C30		C20	E01
All engines	x 4, COIL ON PLUG						9.6447	C10		

				ENGINE
1.4	Petrol	74	03/11->	LDD

Engine	Information	A10	A20	A40	A50	A70	C10 - C30		C20	E01
All engines							9.6447	C10		
All engines	x 1, x 4, COIL ON PLUG						9.6447	C10		

				ENGINE
1.4 Turbo	Petrol	103	08/13->	A 14 NET

Engine	Information	A10	A20	A40	A50	A70	C10 - C30		C20	E01
All engines	x 4, COIL ON PLUG						9.6447	C10		

				ENGINE
1.6	Petrol	85	03/11->	LDE

Engine	Information	A10	A20	A40	A50	A70	C10 - C30		C20	E01
All engines	x 4, COIL ON PLUG						9.6445	C10		

CAPTIVA

				ENGINE
2.4	Petrol	100	06/06->	Z 24 SED

Engine	Information	A10	A20	A40	A50	A70	C10 - C30		C20	E01
All engines										4.7247

				ENGINE
2.4 4WD	Petrol	100	06/06-02/11	Z 24 SED

Engine	Information	A10	A20	A40	A50	A70	C10 - C30		C20	E01
All engines										4.7247

				ENGINE
2.4 LPG	Petrol/ Liquified Petro-leum Gas (LPG)	100	01/07->	Z 24 SED

Engine	Information	A10	A20	A40	A50	A70	C10 - C30		C20	E01
All engines										4.7247

				ENGINE
2.4 LPG 4WD	Petrol/ Liquified Petro-leum Gas (LPG)	100	01/07-02/11	Z 24 SED

Engine	Information	A10	A20	A40	A50	A70	C10 - C30		C20	E01
All engines										4.7247

CRUZE

				ENGINE
1.4	Petrol	103	09/10->	A 14 NET, LUJ

Engine	Information	A10	A20	A40	A50	A70	C10 - C30		C20	E01
All engines	x 4, COIL ON PLUG						9.6447	C10		
Eng. LUJ							9.6447	C10		

A10	CONDENSER	A20	CONTACT SET	A40	DISTRIBUTOR CAP	A50	ROTOR	A70	PICK-UP
C10	COIL	C20	IGNITION MODULE	C30	ELECTRONIC IGNITION KIT	E01	IGNITION CABLE SET		

The present application list is a brief version. For the detailed information about the possibility of installation on a specific vehicle, please refer to our web-catalogue http://catalogo.facet.eu/

Vehicle	alim.	kW	Date	Engine	FUNCTIONS ON THE VEHICLE: A10	A20	A40	A50	A70	C10 - C30	C20	E01
1.4	Petrol	74	07/13->	A 14 XER, LDD								
Eng. All engines: x 4, COIL ON PLUG										9.6447 C10		
Eng. LDD										9.6447 C10		
1.6	Petrol	80	05/09->	F16D3, LXT								
Eng. All engines												4.9680
1.6	Petrol	86	12/12->	LDE								
Eng. All engines: x 4, COIL ON PLUG										9.6445 C10		
1.6	Petrol	91	06/11->	LDE								
Eng. All engines: 01/01/12 ->, 01/01/14 ->, x 4, COIL ON PLUG										9.6445 C10		
EPICA												
2.0	Petrol	98	01/05-12/06	T20SED								
Eng. All engines												4.9677
EVANDA												
2.0	Petrol	96	03/05-12/06	X 20 SED								
Eng. All engines												4.9677
KALOS												
1.2	Petrol	53	03/05->	B12S1, F12S3								
Eng. All engines												4.7006
1.4 16V	Petrol	69	03/05->	F14D3								
Eng. All engines												4.9680
LACETTI												
1.4	Petrol	69	03/05-03/13	F14D3, L14(85CUL4)								
Eng. L14(85CUL4)										9.6485 C10		
Eng. F14D3												4.9509
1.4	Petrol	70	03/05->	F14D3								
Eng. All engines										9.6485 C10		4.9509
1.4 16V	Petrol	70	03/05-03/13	F14D3, L14(85CUL4)								
Eng. L14(85CUL4)										9.6485 C10		
Eng. F14D3												4.9509
1.4 LPG	Petrol/ Liquified Petro-leum Gas (LPG)	69	01/05-12/12	L14(85CUL4)								
Eng. All engines: x 1, D.I.S.										9.6485 C10		
1.6	Petrol	80	03/05->	F16D3, LXT								
Eng. LXT: x 1, D.I.S.										9.6485 C10		

A10	CONDENSER	A20	CONTACT SET	A40	DISTRIBUTOR CAP	A50	ROTOR	A70	PICK-UP
C10	COIL	C20	IGNITION MODULE	C30	ELECTRONIC IGNITION KIT	E01	IGNITION CABLE SET		

The present application list is a brief version. For the detailed information about the possibility of installation on a specific vehicle, please refer to our web-catalogue http://catalogo.facet.eu/

Vehicle	alim.	kW	Date	Engine	FUNCTIONS ON THE VEHICLE A10	A20	A40	A50	A70	C10 - C30	C20	E01
1.6	Petrol	80	03/05->	ENGINE F16D3, LXT								
Eng. F16D3												4.9509
1.6 LPG	Petrol/ Liquified Petro-leum Gas (LPG)	80	06/09-12/11	ENGINE LXT								
All engines				x 1, D.I.S.						9.6485 C10		
1.8	Petrol	66	08/05-12/09	ENGINE LDA								
All engines				x 1, D.I.S.						9.6485 C10		
1.8	Petrol	89	08/05-12/11	ENGINE LDA								
All engines				x 1, D.I.S.						9.6485 C10		
1.8	Petrol	90	03/05->	ENGINE LDA, T18SED								
Eng. LDA				x 1, D.I.S.						9.6485 C10		
Eng. T18SED												4.9677
2.0	Petrol	89	03/05->	ENGINE U20SED								
All engines												4.9677
LANOS												
1.5	Petrol	63	11/05->	ENGINE A15SMS								
All engines												4.9731
1.5	Petrol	64	11/05-12/18	ENGINE A15SMS								
All engines												4.9731
1.6 16V	Petrol	78	11/05->	ENGINE A16DMS								
All engines												4.9680
MATIZ												
0.8	Petrol	38	03/05-12/13	ENGINE LBF(49CUL3), LQ2(49CUL3)								
All engines				VET. 577031 ->								4.7007
All engines				->VET. 577030								4.9634
0.8 LPG	Petrol/ Liquified Petro-leum Gas (LPG)	38	03/05-12/07	ENGINE F8CV								
All engines				VET. 577031 ->								4.7007
All engines				->VET. 577030								4.9634
1.0	Petrol	46	01/08-12/13	ENGINE B10S								
All engines												4.7006

A10	CONDENSER	A20	CONTACT SET	A40	DISTRIBUTOR CAP	A50	ROTOR	A70	PICK-UP
C10	COIL	C20	IGNITION MODULE	C30	ELECTRONIC IGNITION KIT	E01	IGNITION CABLE SET		

The present application list is a brief version. For the detailed information about the possibility of installation on a specific vehicle, please refer to our web-catalogue http://catalogo.facet.eu/

Vehicle	alim.	kW	Date	Engine	FUNCTIONS ON THE VEHICLE A10	A20	A40	A50	A70	C10 - C30	C20	E01
1.0	Petrol	47	03/05-12/07	B10S								
Engine: All engines	Information:											4.7006
1.0	Petrol	49	03/05->	B10S1, LQ4(61CUL4)								
Engine: All engines	Information:											4.7006
1.0 LPG	Petrol/ Liquified Petro-leum Gas (LPG)	49	03/05-03/11	B10S1								
Engine: All engines	Information:											4.7006
NUBIRA												
1.4	Petrol	69	01/05-12/07	F14D3, L14(85CUL4)								
Engine: Eng. L14(85CUL4)	Information: x 1, D.I.S.									9.6485 C10		
Engine: Eng. F14D3	Information:											4.9509
1.4	Petrol	70	01/06-12/08	F14D3, L14(85CUL4)								
Engine: Eng. L14(85CUL4)	Information: x 1, D.I.S.									9.6485 C10		
Engine: Eng. F14D3	Information:											4.9509
1.6	Petrol	76	01/10->	LXT								
Engine: All engines	Information:									9.6485 C10		4.9509
1.6	Petrol	80	03/05-12/11	F16D3, L44(96CUL4), LXT								
Engine: Eng. L44(96CUL4), LXT	Information: x 1, D.I.S.									9.6485 C10		
Engine: Eng. F16D3	Information:											4.9509
1.6 LPG	Petrol/ Liquified Petro-leum Gas (LPG)	80	03/05-12/10	L44(96CUL4), LXT								
Engine: All engines	Information: x 1, D.I.S.									9.6485 C10		
1.8	Petrol	89	08/05-12/11	LDA								
Engine: All engines	Information: x 1, D.I.S.									9.6485 C10		
1.8	Petrol	90	03/05-12/09	LDA, T18SED								
Engine: Eng. LDA	Information: x 1, D.I.S.									9.6485 C10		
Engine: Eng. T18SED	Information:											4.9677
OPTRA												
1.4 16V	Petrol	70	03/05->	F14D3								
Engine: All engines	Information:									9.6485 C10		4.9509
1.6	Petrol	78	08/03-12/08	LXT								
Engine: All engines	Information:									9.6485 C10		4.9509

A10	CONDENSER	A20	CONTACT SET	A40	DISTRIBUTOR CAP	A50	ROTOR	A70	PICK-UP
C10	COIL	C20	IGNITION MODULE	C30	ELECTRONIC IGNITION KIT	E01	IGNITION CABLE SET		

The present application list is a brief version. For the detailed information about the possibility of installation on a specific vehicle, please refer to our web-catalogue http://catalogo.facet.eu/

Vehicle	alim.	kW	Date	Engine	FUNCTIONS ON THE VEHICLE							
					A10	A20	A40	A50	A70	C10 - C30	C20	E01
1.6	Petrol	80	08/03-12/08	F16D3								
Engine: All engines	Information:									9.6485 C10		4.9509
1.6 SRV	Petrol	74	06/06->	F16D3								
Engine: All engines	Information:									9.6485 C10		4.9509
1.8	Petrol	90	08/03-12/08	T18SED								
Engine: All engines	Information:											4.9677
1.8 SRV	Petrol	90	06/06->	T18SED								
Engine: All engines	Information:											4.9677
2.0	Petrol	0	03/05->	U20SED								
Engine: All engines	Information:											4.9677
2.0	Petrol	98	06/99-07/03	X 20 SED								
Engine: All engines	Information:											4.9677
ORLANDO												
1.4	Petrol	103	06/12->	LUJ								
Engine: All engines	Information: x 4, COIL ON PLUG									9.6447 C10		
REZZO												
1.6	Petrol	77	03/05->	A16DMS								
Engine: All engines	Information:											4.9680
1.6	Petrol	79	08/05->	A16DMS								
Engine: All engines	Information:											4.9680
2.0	Petrol	89	03/05->	T20SED								
Engine: All engines	Information:											4.9677
2.0	Petrol	90	08/05-09/09	T20SED								
Engine: All engines	Information:											4.9677
SPARK I												
0.8	Petrol	38	09/00-12/06	F8CV								
Engine: All engines	Information: version Mando						2.8322/39	3.8331/31				
Engine: All engines	Information: version Dac						2.8322/72	3.8331/39				
Engine: All engines	Information: ->VET. 577030									9.6119 C10		4.9634
Engine: All engines	Information: VET. 577031 ->											4.7007
1.0	Petrol	47	11/02-12/04	G 10 CV								
Engine: All engines	Information:											4.7006

A10	CONDENSER	A20	CONTACT SET	A40	DISTRIBUTOR CAP	A50	ROTOR	A70	PICK-UP
C10	COIL	C20	IGNITION MODULE	C30	ELECTRONIC IGNITION KIT	E01	IGNITION CABLE SET		

The present application list is a brief version. For the detailed information about the possibility of installation on a specific vehicle, please refer to our web-catalogue http://catalogo.facet.eu/

Vehicle	alim.	kW	Date	Engine	FUNCTIONS ON THE VEHICLE							
					A10	A20	A40	A50	A70	C10 - C30	C20	E01
SPARK II												
0.8	Petrol	37	05/05-02/10	ENGINE F8CV								
Engine: All engines	Information: VET. 577031 ->											4.7007
Engine: All engines	Information: ->VET. 577030											4.9634
1.0 LPG	Bi-Fuel	46	05/05->	ENGINE B10S								
Engine: All engines	Information:											4.7006
1.0 SX	Petrol	46	05/05->	ENGINE B10S, LA2								
Engine: All engines	Information:											4.7006
1.0 SX	Petrol	49	05/05->	ENGINE B10S1								
Engine: All engines	Information:											4.7006
SPARK III												
1.0	Petrol	50	03/10->	ENGINE B10D1								
Engine: All engines	Information:											4.7249
1.0 LPG	Petrol/ Liquified Petro-leum Gas (LPG)	48	07/10->	ENGINE B10D1								
Engine: All engines	Information:											4.7249
1.0 LPG	Petrol/ Liquified Petro-leum Gas (LPG)	50	03/10->	ENGINE B10D1, LMT								
Engine: All engines	Information:											4.7249
1.2	Petrol	60	03/10->	ENGINE B12D1, LMU								
Engine: All engines	Information:											4.7249
1.2	Petrol	61	01/11->	ENGINE Z 12 XE								
Engine: All engines	Information:											4.7249
1.2 LPG	Petrol/ Liquified Petro-leum Gas (LPG)	60	03/10->	ENGINE B12D1, LMU								
Engine: All engines	Information:											4.7249
TACUMA												
1.6	Petrol	79	02/05->	ENGINE A16DMS								
Engine: All engines	Information:											4.9680
2.0	Petrol	90	02/05->	ENGINE X 20 SED								
Engine: All engines	Information:											4.9677

A10	CONDENSER	**A20**	CONTACT SET	**A40**	DISTRIBUTOR CAP	**A50**	ROTOR	**A70**	PICK-UP
C10	COIL	**C20**	IGNITION MODULE	**C30**	ELECTRONIC IGNITION KIT	**E01**	IGNITION CABLE SET		

The present application list is a brief version. For the detailed information about the possibility of installation on a specific vehicle, please refer to our web-catalogue http://catalogo.facet.eu/

Vehicle	alim.	kW	Date	Engine	FUNCTIONS ON THE VEHICLE A10	A20	A40	A50	A70	C10 - C30	C20	E01
TRAX												
1.4	Petrol	103	12/12->	A 14 NET						9.6447 C10		
1.4 AWD	Petrol	103	12/12->	A 14 NET						9.6447 C10		
1.4 LPG	Petrol/ Liquified Petro-leum Gas (LPG)	103	04/13->	A 14 NET						9.6447 C10		
1.6	Petrol	85	12/12->	LDE						9.6445 C10		
1.8	Petrol	103	03/13->	2H0						9.6445 C10		
1.8 AWD	Petrol	103	03/13->	2H0						9.6445 C10		
VIVANT												
1.6	Petrol	77	01/05->	A16DMS								4.9680
1.6	Petrol	78	08/01->	A16DMS								4.9680
1.8	Petrol	72	05/00->	F18S2								4.9730
2.0	Petrol	89	08/00->	X 20 SED								4.9677
2.0 CX	Petrol	89	01/05->	T20SED								4.9677
VOLT												
EV 150	Petrol/ Electric	111	11/11->	LUU						9.6447 C10		

Engine	Information
All engines	x 4, COIL ON PLUG
All engines	

A10	CONDENSER	A20	CONTACT SET	A40	DISTRIBUTOR CAP	A50	ROTOR	A70	PICK-UP
C10	COIL	C20	IGNITION MODULE	C30	ELECTRONIC IGNITION KIT	E01	IGNITION CABLE SET		

The present application list is a brief version. For the detailed information about the possibility of installation on a specific vehicle, please refer to our web-catalogue http://catalogo.facet.eu/

Vehicle	alim.	kW	Date	Engine	FUNCTIONS ON THE VEHICLE A10	A20	A40	A50	A70	C10 - C30	C20	E01
CIRRUS												
2.0 LX	Petrol	98	10/97-09/00	ENGINE: ECB								
Engine: All engines	Information:											4.9507
2.4 LX	Petrol	103	05/94-09/00	ENGINE: EDZ								
Engine: All engines	Information:											4.9508
2.5 LX	Petrol	120	10/94-09/00	ENGINE: EEB								
Engine: All engines	Information: version Mitsubishi						2.8322/61					
CROSSFIRE												
3.2	Petrol	160	07/03-12/08	ENGINE: EGX								
Engine: All engines	Information: x 6, COIL ON PLUG									9.6317 C10		
SRT-6	Petrol	246	09/04-12/07	ENGINE: EGZ								
Engine: All engines	Information: x 6, COIL ON PLUG									9.6317 C10		
DELTA												
1.4 16V	Petrol	103	08/11->	ENGINE: 198 A7.000								
Engine: All engines	Information: x 4, COIL ON PLUG									9.6449 C10		
LE BARON												
2.2 i	Petrol	109	10/83-09/87	ENGINE: EDG								
Engine: All engines	Information: version Chrysler							3.7579				
2.2 i	Petrol	69	09/89-12/94	ENGINE: --								
Engine: All engines	Information: version Chrysler							3.7579				
2.2 i Turbo	Petrol	109	09/86-12/90	ENGINE: --								
Engine: All engines	Information: version Chrysler							3.7579				
2.2 i Turbo	Petrol	130	10/83-01/91	ENGINE: EDG, EDR								
Engine: All engines	Information: version Chrysler							3.7579				
2.5 i	Petrol	75	09/86-12/94	ENGINE: EDM								
Engine: All engines	Information: version Chrysler							3.7579				
2.5 i Turbo	Petrol	112	01/89-12/94	ENGINE: EDT								
Engine: All engines	Information: version Chrysler							3.7579				
3.0 i V6	Petrol	105	01/90-12/96	ENGINE: 6G72, EFA								
Engine: All engines	Information: version Mitsubishi						2.8322/16	3.8331/9				
NEON I												
1.8 16V	Petrol	85	09/97-08/99	ENGINE: EBD								
Engine: All engines	Information:											4.9507

A10	CONDENSER	**A20**	CONTACT SET	**A40**	DISTRIBUTOR CAP	**A50**	ROTOR	**A70**	PICK-UP
C10	COIL	**C20**	IGNITION MODULE	**C30**	ELECTRONIC IGNITION KIT	**E01**	IGNITION CABLE SET		

The present application list is a brief version. For the detailed information about the possibility of installation on a specific vehicle, please refer to our web-catalogue http://catalogo.facet.eu/

Vehicle	alim.	kW	Date	Engine	FUNCTIONS ON THE VEHICLE A10	A20	A40	A50	A70	C10 - C30	C20	E01
2.0	Petrol	118	10/96-09/00	ECC								
Engine: All engines — Information:												4.9508
2.0 16V	Petrol	107	06/94-08/99	ECC								
Engine: All engines — Information:												4.9508
2.0 16V	Petrol	109	04/96-08/99	420T								
Engine: All engines — Information:												4.9508
2.0 16V	Petrol	98	05/94-08/99	420H								
Engine: All engines — Information:												4.9507
NEON II												
1.6	Petrol	85	11/01-12/06	EJD								
Engine: All engines — Information:												4.9719
2.0 16V	Petrol	98	08/99-12/06	420H								
Engine: All engines — Information:												4.9507
PT CRUISER												
1.6	Petrol	85	11/01-12/10	EJD								
Engine: All engines — Information:												4.9719
2.0	Petrol	104	06/00-09/04	ECC								
Engine: All engines — Information:												4.9511
2.4	Petrol	105	03/04-03/08	EDZ								
Engine: All engines — Information:												4.9511
2.4 GT	Petrol	164	03/04-03/08	EDV								
Engine: All engines — Information:												4.9990
GT 2.4	Petrol	164	08/03-12/10	EDV								
Engine: All engines — Information:												4.9990
SEBRING I												
2.5 LE	Petrol	120	05/95-12/96	EEB								
Engine: All engines — Information: version Mitsubishi							2.8322/61					
SEBRING II												
2.0	Petrol	104	04/01-06/07	ECC								
Engine: All engines — Information: Saloon												4.9507
Engine: All engines — Information: convertible												4.9511
2.4	Petrol	112	04/01-06/07	EDZ								
Engine: All engines — Information: no specific info conc. application available												4.9511, 4.9764

A10	CONDENSER	A20	CONTACT SET	A40	DISTRIBUTOR CAP	A50	ROTOR	A70	PICK-UP
C10	COIL	C20	IGNITION MODULE	C30	ELECTRONIC IGNITION KIT	E01	IGNITION CABLE SET		

The present application list is a brief version. For the detailed information about the possibility of installation on a specific vehicle, please refer to our web-catalogue http://catalogo.facet.eu/

Vehicle	alim.	kW	Date	Engine	FUNCTIONS ON THE VEHICLE A10	A20	A40	A50	A70	C10 - C30	C20	E01

STRATUS

				ENGINE
2.0 16V	Petrol	98	12/95-04/01	ECB

Engine	Information	A10	A20	A40	A50	A70	C10 - C30	C20	E01
All engines									4.9507

				ENGINE
2.0 LE	Petrol	96	12/95-04/01	420X, C00

Engine	Information	A10	A20	A40	A50	A70	C10 - C30	C20	E01
All engines									4.9507

				ENGINE
2.4 16 V	Petrol	103	12/95-04/01	EDZ

Engine	Information	A10	A20	A40	A50	A70	C10 - C30	C20	E01
All engines									4.9508

				ENGINE
2.4 16V	Petrol	112	12/95-04/01	EDZ

Engine	Information	A10	A20	A40	A50	A70	C10 - C30	C20	E01
All engines									4.9508

				ENGINE
2.5 LX	Petrol	120	04/96-04/01	625H

Engine	Information	A10	A20	A40	A50	A70	C10 - C30	C20	E01
All engines	version Mitsubishi			2.8322/61					

				ENGINE
2.5 LX V6	Petrol	120	12/95-04/01	5RG225

Engine	Information	A10	A20	A40	A50	A70	C10 - C30	C20	E01
All engines	version Mitsubishi			2.8322/61					

				ENGINE
2.5 V6	Petrol	125	12/95-04/01	5RG225

Engine	Information	A10	A20	A40	A50	A70	C10 - C30	C20	E01
All engines	version Mitsubishi			2.8322/61					

VOYAGER

				ENGINE
2.5 i	Petrol	72	01/91-09/95	K00

Engine	Information	A10	A20	A40	A50	A70	C10 - C30	C20	E01
All engines	version Chrysler				3.7579				

				ENGINE
2.5 i	Petrol	74	08/90-09/95	K

Engine	Information	A10	A20	A40	A50	A70	C10 - C30	C20	E01
All engines	version Chrysler				3.7579				

				ENGINE
3.0 i	Petrol	108	01/91-09/95	300, 6G72

Engine	Information	A10	A20	A40	A50	A70	C10 - C30	C20	E01
All engines	version Mitsubishi			2.8322/16	3.8331/9				

				ENGINE
3.3	Petrol	112	10/89-09/90	EGA

Engine	Information	A10	A20	A40	A50	A70	C10 - C30	C20	E01
All engines	version Mitsubishi			2.8322/16	3.8331/9				

VOYAGER I

				ENGINE
3.0 i [USA]	Petrol	108	10/84-07/90	EFA

Engine	Information	A10	A20	A40	A50	A70	C10 - C30	C20	E01
All engines	version Mitsubishi			2.8322/16	3.8331/9				

VOYAGER II

				ENGINE
2.0 i	Petrol	98	01/95-03/01	C00

Engine	Information	A10	A20	A40	A50	A70	C10 - C30	C20	E01
All engines									4.9507

				ENGINE
2.4 i	Petrol	111	01/95-03/01	B00

Engine	Information	A10	A20	A40	A50	A70	C10 - C30	C20	E01
All engines									4.9508

A10	CONDENSER	A20	CONTACT SET	A40	DISTRIBUTOR CAP	A50	ROTOR	A70	PICK-UP
C10	COIL	C20	IGNITION MODULE	C30	ELECTRONIC IGNITION KIT	E01	IGNITION CABLE SET		

The present application list is a brief version. For the detailed information about the possibility of installation on a specific vehicle, please refer to our web-catalogue http://catalogo.facet.eu/

Vehicle	alim.	kW	Date	Engine	FUNCTIONS ON THE VEHICLE							
					A10	A20	A40	A50	A70	C10 - C30	C20	E01
3.3 i	Petrol	116	01/95-03/01	ENGINE R00								
Engine: All engines	Information:											4.9343
3.8 i AWD	Petrol	122	01/95-03/01	ENGINE L00								
Engine: All engines	Information:											4.9343
3.8 i AWD	Petrol	131	01/95-03/01	ENGINE EGH								
Engine: All engines	Information:											4.9343
VOYAGER III												
2.4	Petrol	108	02/00-12/08	ENGINE EDZ								
Engine: All engines	Information:											4.9511
3.3	Petrol	128	02/00-12/08	ENGINE EGA								
Engine: All engines	Information:											4.9345
3.3 AWD	Petrol	128	02/00-12/08	ENGINE EGA								
Engine: All engines	Information:											4.9345
YPSILON												
1.2	Petrol	51	05/11->	ENGINE 169 A4.000								
Engine: All engines	Information: x 1, D.I.S.									9.6323 C10		

A10	CONDENSER	A20	CONTACT SET	A40	DISTRIBUTOR CAP	A50	ROTOR	A70	PICK-UP
C10	COIL	C20	IGNITION MODULE	C30	ELECTRONIC IGNITION KIT	E01	IGNITION CABLE SET		

The present application list is a brief version. For the detailed information about the possibility of installation on a specific vehicle, please refer to our web-catalogue http://catalogo.facet.eu/

Vehicle	alim.	kW	Date	Engine	FUNCTIONS ON THE VEHICLE: A10	A20	A40	A50	A70	C10 - C30	C20	E01

2 CV

				ENGINE
6	Petrol	21	02/70-10/85	A06/635, A06/664

Engine	Information	A10	A20	A40	A50	A70	C10 - C30		C20	E01
All engines	version Ducellier		1.3664							

ACADIANE

				ENGINE
6	Petrol	22	08/78-10/88	M28 (AM2)

Engine	Information	A10	A20	A40	A50	A70	C10 - C30		C20	E01
All engines	version Ducellier		1.3664							

AX

				ENGINE
1.3 Sport	Petrol	70	04/87-12/88	M4A

Engine	Information	A10	A20	A40	A50	A70	C10 - C30		C20	E01
All engines	version Bosch			2.7530/11PHT	3.7556RS					
All engines	version Ducellier			2.7674PHT	3.7702RS	8.3619				
All engines	Kit, version Ducellier			2.7687						
All engines	->year 27/04/91						9.6005	C10		
All engines	28/04/91 ->						9.6055	C10		
All engines										4.9376

				ENGINE
1.4 GTi	Petrol	66	08/91-12/96	KFY (TU3FJ2)

Engine	Information	A10	A20	A40	A50	A70	C10 - C30		C20	E01
All engines							9.6089	C10		4.9374

				ENGINE
1.4 GTi	Petrol	69	06/91-12/96	KFZ (TU3FJ2)

Engine	Information	A10	A20	A40	A50	A70	C10 - C30		C20	E01
All engines							9.6089	C10		4.9374

				ENGINE
1.4 GTi	Petrol	74	06/91-12/92	KFZ (TU3FJ2)

Engine	Information	A10	A20	A40	A50	A70	C10 - C30		C20	E01
All engines							9.6089	C10		4.9374

				ENGINE
10	Petrol	32	09/86-06/92	C1A

Engine	Information	A10	A20	A40	A50	A70	C10 - C30		C20	E01
All engines	version Bosch			2.7530/11PHT	3.7556RS					
All engines	version Ducellier			2.7674PHT	3.7702RS	8.3619				
All engines	Kit, version Ducellier			2.7687						
All engines	version Marelli				3.8260					
All engines	->year 27/04/91						9.6005	C10		
All engines	28/04/91 ->						9.6055	C10		
All engines										4.9376

				ENGINE
10	Petrol	33	07/86-12/98	CDY (TU9M)

Engine	Information	A10	A20	A40	A50	A70	C10 - C30		C20	E01
All engines							9.6089	C10		4.9374

				ENGINE
10	Petrol	37	02/87-12/98	CDZ (TU9M)

Engine	Information	A10	A20	A40	A50	A70	C10 - C30		C20	E01
All engines							9.6089	C10		4.9374

				ENGINE
10 E	Petrol	30	12/86-12/88	C3A

Engine	Information	A10	A20	A40	A50	A70	C10 - C30		C20	E01
All engines	version Bosch			2.7530/11PHT	3.7556RS					
All engines	version Ducellier			2.7674PHT	3.7702RS	8.3619				
All engines	Kit, version Ducellier			2.7687						
All engines	version Marelli				3.8260					
All engines	->year 27/04/91						9.6005	C10		
All engines	28/04/91 ->						9.6055	C10		
All engines										4.9376

A10	CONDENSER	A20	CONTACT SET	A40	DISTRIBUTOR CAP	A50	ROTOR	A70	PICK-UP
C10	COIL	C20	IGNITION MODULE	C30	ELECTRONIC IGNITION KIT	E01	IGNITION CABLE SET		

The present application list is a brief version. For the detailed information about the possibility of installation on a specific vehicle, please refer to our web-catalogue http://catalogo.facet.eu/

Vehicle	alim.	kW	Date	Engine	FUNCTIONS ON THE VEHICLE A10	A20	A40	A50	A70	C10 - C30	C20	E01
11	Petrol	40	12/86-04/94	ENGINE H1A, H1B								

Engine	Information	A10	A20	A40	A50	A70	C10 - C30		C20	E01
All engines	version Bosch			2.7530/11PHT	3.7556RS					
All engines	version Ducellier			2.7674PHT	3.7702RS	8.3619				
All engines	Kit, version Ducellier			2.7687						
All engines	version Marelli				3.8260					
All engines	->year 27/04/91						9.6005	C10		
All engines	28/04/91 ->						9.6055	C10		
All engines										4.9376

11	Petrol	44	09/86-06/98	ENGINE HDY, HDZ (TU1M)

Engine	Information	A10	A20	A40	A50	A70	C10 - C30		C20	E01
All engines	version Bosch			2.7530/11PHT	3.7556RS					
All engines	version Ducellier			2.7674PHT	3.7702RS	8.3619				
All engines	Kit, version Ducellier			2.7687						
All engines	->year 27/04/91						9.6005	C10		
All engines	28/04/91 ->, ->year 04/05/92						9.6055	C10		
All engines	05/05/92 ->						9.6089	C10		4.9374
All engines	->year 04/05/92									4.9376

11 4x4	Petrol	40	06/91-07/92	ENGINE H1A

Engine	Information	A10	A20	A40	A50	A70	C10 - C30		C20	E01
All engines	version Bosch			2.7530/11PHT	3.7556RS					
All engines	version Ducellier			2.7674PHT	3.7702RS	8.3619				
All engines	Kit, version Ducellier			2.7687						
All engines	version Marelli				3.8260					
All engines	->year 27/04/91						9.6005	C10		
All engines	28/04/91 ->						9.6055	C10		
All engines										4.9376

11 Cat	Petrol	40	09/88-12/89	ENGINE HAZ (TU1CP)

Engine	Information	A10	A20	A40	A50	A70	C10 - C30		C20	E01
All engines	version Bosch			2.7530/11PHT	3.7556RS					
All engines	version Ducellier			2.7674PHT	3.7702RS	8.3619				
All engines	Kit, version Ducellier			2.7687						
All engines	version Marelli				3.8260					
All engines	->year 27/04/91						9.6005	C10		
All engines	28/04/91 ->						9.6055	C10		
All engines										4.9376

14	Petrol	44	12/86-12/88	ENGINE K1B, KAY (TU3CP)

Engine	Information	A10	A20	A40	A50	A70	C10 - C30		C20	E01
All engines	version Bosch			2.7530/11PHT	3.7556RS					
All engines	version Ducellier			2.7674PHT	3.7702RS	8.3619				
All engines	Kit, version Ducellier			2.7687						
All engines	->year 27/04/91						9.6005	C10		
All engines	28/04/91 ->						9.6055	C10		
All engines										4.9376

14	Petrol	49	06/88-12/89	ENGINE K1F

Engine	Information	A10	A20	A40	A50	A70	C10 - C30		C20	E01
All engines	version Bosch			2.7530/11PHT	3.7556RS					
All engines	version Ducellier			2.7674PHT	3.7702RS	8.3619				
All engines	Kit, version Ducellier			2.7687						
All engines	->year 27/04/91						9.6005	C10		
All engines	28/04/91 ->						9.6055	C10		
All engines										4.9376

14	Petrol	51	01/89-12/91	ENGINE K1G

Engine	Information	A10	A20	A40	A50	A70	C10 - C30		C20	E01
All engines	version Bosch			2.7530/11PHT	3.7556RS					
All engines	version Ducellier			2.7674PHT	3.7702RS	8.3619				

A10	CONDENSER	A20	CONTACT SET	A40	DISTRIBUTOR CAP	A50	ROTOR	A70	PICK-UP
C10	COIL	C20	IGNITION MODULE	C30	ELECTRONIC IGNITION KIT	E01	IGNITION CABLE SET		

The present application list is a brief version. For the detailed information about the possibility of installation on a specific vehicle, please refer to our web-catalogue http://catalogo.facet.eu/

Vehicle	alim.	kW	Date	Engine	FUNCTIONS ON THE VEHICLE: A10	A20	A40	A50	A70	C10 - C30	C20	E01
14	Petrol	51	01/89-12/91	K1G								

Engine	Information	A10	A20	A40	A50	A70	C10 - C30		C20	E01
All engines	Kit, version Ducellier			2.7687						
All engines	->year 27/04/91						9.6005	C10		
All engines	28/04/91 ->						9.6055	C10		
All engines										4.9376

14	Petrol	55	04/87-04/97	K2D, KDX (TU3M/Z), KDY (TU3FM), KDY (TU3M), KDZ (TU3M/Z)

Engine	Information	A10	A20	A40	A50	A70	C10 - C30		C20	E01
All engines	version Bosch			2.7530/11PHT	3.7556RS					
All engines	version Ducellier			2.7674PHT	3.7702RS	8.3619				
All engines	Kit, version Ducellier			2.7687						
Eng. K2D, KDX (TU3M/Z), KDY (TU3FM)	->year 27/04/91						9.6005	C10		
All engines	28/04/91 ->, ->year 04/01/93						9.6055	C10		
Eng. KDX (TU3M/Z), KDY (TU3FM)	05/01/93 ->						9.6089	C10		4.9374
All engines	->year 04/01/93									4.9376

14	Petrol	61	01/88-12/92	K2A

Engine	Information	A10	A20	A40	A50	A70	C10 - C30		C20	E01
All engines	version Bosch			2.7530/11PHT	3.7556RS					
All engines	version Ducellier			2.7674PHT	3.7702RS	8.3619				
All engines	Kit, version Ducellier			2.7687						
All engines	->year 27/04/91						9.6005	C10		
All engines	28/04/91 ->						9.6055	C10		
All engines										4.9376

14	Petrol	62	01/88-12/92	K2A, K2B

Engine	Information	A10	A20	A40	A50	A70	C10 - C30		C20	E01
All engines	version Bosch			2.7530/11PHT	3.7556RS					
All engines	version Ducellier			2.7674PHT	3.7702RS	8.3619				
All engines	Kit, version Ducellier			2.7687						
All engines	->year 27/04/91						9.6005	C10		
All engines	28/04/91 ->						9.6055	C10		
All engines										4.9376

14 4x4	Petrol	55	08/91-12/96	KDX (TU3M/Z), KDY (TU3FM), KDY (TU3M), KDZ (TU3M/Z)

Engine	Information	A10	A20	A40	A50	A70	C10 - C30		C20	E01
All engines	version Bosch			2.7530/11PHT	3.7556RS					
All engines	version Ducellier			2.7674PHT	3.7702RS	8.3619				
All engines	Kit, version Ducellier			2.7687						
Eng. KDY (TU3FM)	->year 27/04/91						9.6005	C10		
All engines	28/04/91 ->, ->year 04/01/93						9.6055	C10		
Eng. KDY (TU3FM)	05/01/93 ->						9.6089	C10		4.9374
All engines	->year 04/01/93									4.9376

14 GT	Petrol	59	01/89-12/91	KDZ (TU3M/Z)

Engine	Information	A10	A20	A40	A50	A70	C10 - C30		C20	E01
All engines	version Bosch			2.7530/11PHT	3.7556RS					
All engines	version Ducellier			2.7674PHT	3.7702RS	8.3619				
All engines	Kit, version Ducellier			2.7687						
All engines							9.6005	C10		4.9376

AXEL

11	Petrol	42	01/84-03/91	G11/631

Engine	Information	A10	A20	A40	A50	A70	C10 - C30		C20	E01
All engines	version Ducellier	0.0334		2.7658PHT	3.7688					

A10	CONDENSER	A20	CONTACT SET	A40	DISTRIBUTOR CAP	A50	ROTOR	A70	PICK-UP
C10	COIL	C20	IGNITION MODULE	C30	ELECTRONIC IGNITION KIT	E01	IGNITION CABLE SET		

The present application list is a brief version. For the detailed information about the possibility of installation on a specific vehicle, please refer to our web-catalogue http://catalogo.facet.eu/

Vehicle	alim.	kW	Date	Engine	FUNCTIONS ON THE VEHICLE A10	A20	A40	A50	A70	C10 - C30	C20	E01
11	Petrol	45	01/84-03/91	--								

Engine	Information	A10	A20	A40	A50	A70	C10 - C30	C20	E01
All engines	version Ducellier			2.7658PHT	3.7694				
All engines								9.4005	

BERLINGO I

				ENGINE
1.1 i	Petrol	44	07/96-05/08	HDZ (TU1M), HFX (TU1JP)

Engine	Information	A10	A20	A40	A50	A70	C10 - C30	C20	E01
Eng. HDZ (TU1M)							9.6088 C10		4.9374
Eng. HFX (TU1JP)							9.6305 C10		

				ENGINE
1.4	Petrol	51	07/96-10/98	TU32

Engine	Information	A10	A20	A40	A50	A70	C10 - C30	C20	E01
All engines	version Ducellier			2.7674PHT	3.7702RS	8.3619			
All engines	Kit, version Ducellier			2.7687					
All engines							9.6055 C10		4.9376

				ENGINE
1.4	Petrol	53	11/02-10/05	KFW (TU3JP)

Engine	Information	A10	A20	A40	A50	A70	C10 - C30	C20	E01
All engines	x 1, COIL ON PLUG						9.6305 C10		

				ENGINE
1.4 BiFuel	Petrol/ Liquified Petro-leum Gas (LPG)	55	07/96-10/02	KFW (TU3JP)

Engine	Information	A10	A20	A40	A50	A70	C10 - C30	C20	E01
All engines	->year 01/05/98, euro 2, x 1, D.I.S., connector type, saw teeth						9.6088 C10		
All engines	01/06/98 ->, euro 2, x 4, Electricfil, COIL ON PLUG						9.6303 C10		
All engines	euro 3, x 1, COIL ON PLUG						9.6305 C10		

				ENGINE
1.4 bivalent	Petrol/ Com-pressed Natural Gas (CNG)	48	11/02-12/11	KFW (TU3JP)

Engine	Information	A10	A20	A40	A50	A70	C10 - C30	C20	E01
All engines	euro 2, x 4, Electricfil, COIL ON PLUG						9.6303 C10		
All engines	x 1, COIL ON PLUG ---------- euro 3, x 1, COIL ON PLUG						9.6305 C10		

				ENGINE
1.4 CNG	Petrol/ Com-pressed Natural Gas (CNG)	48	11/02-03/08	KFW (TU3JP)

Engine	Information	A10	A20	A40	A50	A70	C10 - C30	C20	E01
All engines							9.6305 C10		

				ENGINE
1.4 GNC	Gas	48	11/02->	KFW (TU3JP)

Engine	Information	A10	A20	A40	A50	A70	C10 - C30	C20	E01
All engines							9.6305 C10		

				ENGINE
1.4 Hybrid	Petrol/ Electric	54	05/05->	KFW (TU3JP)

Engine	Information	A10	A20	A40	A50	A70	C10 - C30	C20	E01
All engines							9.6305 C10		

				ENGINE
1.4 i	Petrol	55	07/96-12/11	KFW (TU3JP), KFX (TU3JP)

Engine	Information	A10	A20	A40	A50	A70	C10 - C30	C20	E01
All engines	->year 31/05/98						9.6088 C10		4.9374
All engines	euro 2, x 4, Electricfil, COIL ON PLUG						9.6303 C10		

A10	CONDENSER	**A20**	CONTACT SET	**A40**	DISTRIBUTOR CAP	**A50**	ROTOR	**A70**	PICK-UP
C10	COIL	**C20**	IGNITION MODULE	**C30**	ELECTRONIC IGNITION KIT	**E01**	IGNITION CABLE SET		

The present application list is a brief version. For the detailed information about the possibility of installation on a specific vehicle, please refer to our web-catalogue http://catalogo.facet.eu/

Vehicle	alim.	kW	Date	Engine	FUNCTIONS ON THE VEHICLE A10	A20	A40	A50	A70	C10 - C30	C20	E01
1.4 i	Petrol	55	07/96-12/11	**KFW (TU3JP), KFX (TU3JP)**								

Engine	Information	A10	A20	A40	A50	A70	C10 - C30		C20	E01
All engines	euro 3, x 1, COIL ON PLUG						9.6305	C10		

1.4 i	Petrol	57	08/99-05/08	KFW (TU3JP), KFX (TU3JP)

Engine	Information	A10	A20	A40	A50	A70	C10 - C30		C20	E01
All engines	x 1, Electricfil, COIL ON PLUG						9.6303	C10		
All engines	x 1, COIL ON PLUG						9.6305	C10		

1.4 i bivalent	Petrol/ Compressed Natural Gas (CNG)	55	04/03-10/08	KFW (TU3JP)

Engine	Information	A10	A20	A40	A50	A70	C10 - C30		C20	E01
All engines	->year 31/05/98						9.6088	C10		4.9374
All engines	euro 2, x 4, Electricfil, COIL ON PLUG						9.6303	C10		
All engines	euro 3, x 1, COIL ON PLUG						9.6305	C10		

1.6 16V	Petrol	80	10/00-12/11	NFU (TU5JP4)

Engine	Information	A10	A20	A40	A50	A70	C10 - C30		C20	E01
All engines	x 1, COIL ON PLUG						9.6307	C10		

1.6 16V	Petrol	81	11/02-10/08	NFU (TU5JP4)

Engine	Information	A10	A20	A40	A50	A70	C10 - C30		C20	E01
All engines	x 1, COIL ON PLUG						9.6307	C10		

1.8 i	Petrol	66	05/97-10/02	LFX (XU7JB)

Engine	Information	A10	A20	A40	A50	A70	C10 - C30		C20	E01
All engines	x 1, D.I.S., connector type, saw teeth						9.6088	C10		
All engines										4.8674

1.8 i 4WD	Petrol	66	04/97-10/01	LFX (XU7JB)

Engine	Information	A10	A20	A40	A50	A70	C10 - C30		C20	E01
All engines							9.6088	C10		4.8674

BERLINGO II

1.2 PureTech 110	Petrol	81	02/16->	--, EB2DT, HNZ (EB2DT)

Engine	Information	A10	A20	A40	A50	A70	C10 - C30		C20	E01
Eng. --, EB2DT	Qty: 3						9.6520	C10		
Eng. HNZ (EB2DT)	x 3, COIL ON PLUG						9.6520	C10		

1.6	Petrol	66	04/08->	NFR (TU5JP4B)

Engine	Information	A10	A20	A40	A50	A70	C10 - C30		C20	E01
All engines	x 1, COIL ON PLUG						9.6307	C10		

1.6	Petrol	80	04/08->	N6A (TU5JP4), NFU (TU5JP4)

Engine	Information	A10	A20	A40	A50	A70	C10 - C30		C20	E01
Eng. N6A (TU5JP4)							9.6307	C10		
Eng. NFU (TU5JP4)	x 1, COIL ON PLUG						9.6307	C10		

1.6 VTi 120	Petrol	88	11/09->	5FS (EP6C)

Engine	Information	A10	A20	A40	A50	A70	C10 - C30		C20	E01
All engines	x 4, COIL ON PLUG						9.6375	C10		

1.6 VTi 95	Petrol	72	07/10->	5FK (EP6CB)

Engine	Information	A10	A20	A40	A50	A70	C10 - C30		C20	E01
All engines	x 4, COIL ON PLUG						9.6375	C10		

A10	CONDENSER	A20	CONTACT SET	A40	DISTRIBUTOR CAP	A50	ROTOR	A70	PICK-UP
C10	COIL	C20	IGNITION MODULE	C30	ELECTRONIC IGNITION KIT	E01	IGNITION CABLE SET		

The present application list is a brief version. For the detailed information about the possibility of installation on a specific vehicle, please refer to our web-catalogue http://catalogo.facet.eu/

Vehicle	alim.	kW	Date	Engine	FUNCTIONS ON THE VEHICLE A10	A20	A40	A50	A70	C10 - C30	C20	E01

BX

				ENGINE
1.1	Petrol	40	06/88-06/91	H1A

Engine	Information	A10	A20	A40	A50	A70	C10 - C30		C20	E01
All engines	15/05/88 ->, version Bosch			2.7530/11PHT	3.7556RS					
All engines	->year 14/05/88, version Ducellier			2.7658PHT						
All engines	15/05/88 ->, version Ducellier			2.7674PHT	3.7702RS	8.3619				
All engines	Kit, 15/05/88 ->, version Ducellier			2.7687						
All engines	->year 15/05/88, version Ducellier				3.7694					
All engines	15/05/88 ->						9.6005	C10		4.9376
All engines	->year 14/05/88								9.4005	

				ENGINE
1.4	Petrol	50	07/86-12/94	K1F

Engine	Information	A10	A20	A40	A50	A70	C10 - C30		C20	E01
All engines	->year 01/05/88, version Bosch			2.7524PHT						
All engines	02/05/88 ->, version Bosch			2.7530/11PHT						
All engines	->year 01/05/88, version Ducellier, distr. num. 2525578A, 2525579A			2.7658PHT						
All engines	->year 01/05/88, version Ducellier, distr. num. 2525577A/B/C, distr. num. 2525578B, distr. num. 2525621, 2525579B			2.7667PHT						
All engines	02/05/88 ->, version Ducellier			2.7674PHT	3.7702RS	8.3619				
All engines	Kit, 02/05/88 ->, version Ducellier			2.7687						
All engines	version Bosch				3.7556RS					
All engines	->year 01/05/88, version Ducellier				3.7694					
All engines	02/05/88 ->						9.6005	C10		4.9376
All engines	->year 01/05/88								9.4005	

				ENGINE
1.4	Petrol	52	01/87-01/92	150C

Engine	Information	A10	A20	A40	A50	A70	C10 - C30		C20	E01
All engines	->year 01/05/88, version Bosch			2.7524PHT						
All engines	02/05/88 ->, version Bosch			2.7530/11PHT						
All engines	->year 01/05/88, version Ducellier, distr. num. 2525578A, 2525579A			2.7658PHT						
All engines	->year 01/05/88, version Ducellier, distr. num. 2525577A/B/C, distr. num. 2525578B, distr. num. 2525621, 2525579B			2.7667PHT						
All engines	02/05/88 ->, version Ducellier			2.7674PHT	3.7702RS	8.3619				
All engines	Kit, 02/05/88 ->, version Ducellier			2.7687						
All engines	version Bosch				3.7556RS					
All engines	->year 01/05/88, version Ducellier				3.7694					
All engines	02/05/88 ->						9.6005	C10		4.9376
All engines	->year 01/05/88								9.4005	

				ENGINE
1.4	Petrol	55	09/91-09/93	K2D

Engine	Information	A10	A20	A40	A50	A70	C10 - C30		C20	E01
All engines	->year 01/05/88, version Bosch			2.7524PHT						
All engines	02/05/88 ->, version Bosch			2.7530/11PHT						
All engines	->year 01/05/88, version Ducellier, distr. num. 2525578A, 2525579A			2.7658PHT						
All engines	->year 01/05/88, version Ducellier, distr. num. 2525577A/B/C, distr. num. 2525578B, distr. num. 2525621, 2525579B			2.7667PHT						
All engines	02/05/88 ->, version Ducellier			2.7674PHT	3.7702RS	8.3619				
All engines	Kit, 02/05/88 ->, version Ducellier			2.7687						
All engines	version Bosch				3.7556RS					
All engines	->year 01/05/88, version Ducellier				3.7694					
All engines	02/05/88 ->						9.6005	C10		4.9376
All engines	->year 01/05/88								9.4005	

				ENGINE
1.4 E	Petrol	46	05/86-06/88	KAZ

Engine	Information	A10	A20	A40	A50	A70	C10 - C30		C20	E01
All engines	->year 01/05/88, version Bosch			2.7524PHT						
All engines	02/05/88 ->, version Bosch			2.7530/11PHT						
All engines	->year 01/05/88, version Ducellier, distr. num. 2525578A, 2525579A			2.7658PHT						
All engines	->year 01/05/88, version Ducellier, distr. num. 2525577A/B/C, distr. num. 2525578B, distr. num. 2525621, 2525579B			2.7667PHT						
All engines	02/05/88 ->, version Ducellier			2.7674PHT	3.7702RS	8.3619				

A10	CONDENSER	A20	CONTACT SET	A40	DISTRIBUTOR CAP	A50	ROTOR	A70	PICK-UP
C10	COIL	C20	IGNITION MODULE	C30	ELECTRONIC IGNITION KIT	E01	IGNITION CABLE SET		

The present application list is a brief version. For the detailed information about the possibility of installation on a specific vehicle, please refer to our web-catalogue http://catalogo.facet.eu/

Vehicle	alim.	kW	Date	Engine	FUNCTIONS ON THE VEHICLE							
					A10	A20	A40	A50	A70	C10 - C30	C20	E01
1.4 E	Petrol	46	05/86-06/88	ENGINE KAZ								

Engine	Information	A10	A20	A40	A50	A70	C10 - C30		C20	E01
All engines	Kit, 02/05/88 ->, version Ducellier			2.7687						
All engines	version Bosch				3.7556RS					
All engines	->year 01/05/88, version Ducellier				3.7694					
All engines	02/05/88 ->						9.6005	C10		4.9376
All engines	->year 01/05/88								9.4005	

1.4 E	Petrol	50	07/86-12/94	ENGINE K1F

Engine	Information	A10	A20	A40	A50	A70	C10 - C30		C20	E01
All engines	->year 01/05/88, version Bosch			2.7524PHT						
All engines	02/05/88 ->, version Bosch			2.7530/11PHT						
All engines	->year 01/05/88, version Ducellier, distr. num. 2525578A, 2525579A			2.7658PHT						
All engines	->year 01/05/88, version Ducellier, distr. num. 2525577A/B/C, distr. num. 2525578B, distr. num. 2525621, 2525579B			2.7667PHT						
All engines	02/05/88 ->, version Ducellier			2.7674PHT	3.7702RS	8.3619				
All engines	Kit, 02/05/88 ->, version Ducellier			2.7687						
All engines	version Bosch				3.7556RS					
All engines	->year 01/05/88, version Ducellier				3.7694					
All engines	02/05/88 ->						9.6005	C10		4.9376
All engines	->year 01/05/88								9.4005	

1.4 E	Petrol	59	09/82-12/86	ENGINE 150B (XY8)

Engine	Information	A10	A20	A40	A50	A70	C10 - C30		C20	E01
All engines	->year 01/05/88, version Bosch			2.7524PHT						
All engines	02/05/88 ->, version Bosch			2.7530/11PHT						
All engines	->year 01/05/88, version Ducellier, distr. num. 2525578A, 2525579A			2.7658PHT						
All engines	->year 01/05/88, version Ducellier, distr. num. 2525577A/B/C, distr. num. 2525578B, distr. num. 2525621, 2525579B			2.7667PHT						
All engines	02/05/88 ->, version Ducellier			2.7674PHT	3.7702RS	8.3619				
All engines	Kit, 02/05/88 ->, version Ducellier			2.7687						
All engines	version Bosch				3.7556RS					
All engines	->year 01/05/88, version Ducellier				3.7694					
All engines	02/05/88 ->						9.6005	C10		4.9376
All engines	->year 01/05/88								9.4005	

1.6	Petrol	85	01/87-01/92	ENGINE B6D, B6E

Engine	Information	A10	A20	A40	A50	A70	C10 - C30		C20	E01
All engines	->year 31/10/89, version Bosch			2.7524PHT						
All engines	01/11/89 ->, version Bosch			2.7530/11PHT						
All engines	version Bosch				3.7556RS					
All engines	01/11/89 ->						9.6005	C10		4.8491
All engines									9.4005	
All engines	->year 31/10/89									4.8747

14	Petrol	53	01/86-02/93	ENGINE 150C

Engine	Information	A10	A20	A40	A50	A70	C10 - C30		C20	E01
All engines	->year 01/05/88, version Bosch			2.7524PHT						
All engines	02/05/88 ->, version Bosch			2.7530/11PHT						
All engines	->year 01/05/88, version Ducellier, distr. num. 2525578A, 2525579A			2.7658PHT						
All engines	->year 01/05/88, version Ducellier, distr. num. 2525577A/B/C, distr. num. 2525578B, distr. num. 2525621, 2525579B			2.7667PHT						
All engines	02/05/88 ->, version Ducellier			2.7674PHT	3.7702RS	8.3619				
All engines	Kit, 02/05/88 ->, version Ducellier			2.7687						
All engines	version Bosch				3.7556RS					
All engines	->year 01/05/88, version Ducellier				3.7694					
All engines	02/05/88 ->						9.6005	C10		4.9376
All engines	->year 01/05/88								9.4005	

A10	CONDENSER	A20	CONTACT SET	A40	DISTRIBUTOR CAP	A50	ROTOR	A70	PICK-UP
C10	COIL	C20	IGNITION MODULE	C30	ELECTRONIC IGNITION KIT	E01	IGNITION CABLE SET		

The present application list is a brief version. For the detailed information about the possibility of installation on a specific vehicle, please refer to our web-catalogue http://catalogo.facet.eu/

Vehicle	alim.	kW	Date	Engine	FUNCTIONS ON THE VEHICLE A10	A20	A40	A50	A70	C10 - C30	C20	E01
14	Petrol	55	01/89-02/93	ENGINE KDY (TU3M), KDZ (TU3M/Z)								

Engine	Information	A10	A20	A40	A50	A70	C10 - C30		C20	E01
All engines	version Bosch			2.7530/11PHT	3.7556RS					
All engines	version Ducellier			2.7674PHT	3.7702RS	8.3619				
All engines	Kit, version Ducellier			2.7687						
All engines							9.6005	C10		4.9376

Vehicle	alim.	kW	Date	Engine
14 E	Petrol	45	10/82-06/88	ENGINE 150A

Engine	Information	A10	A20	A40	A50	A70	C10 - C30		C20	E01
All engines	->year 01/05/88, version Bosch			2.7524PHT						
All engines	02/05/88 ->, version Bosch			2.7530/11PHT						
All engines	->year 01/05/88, version Ducellier, distr. num. 2525578A, 2525579A			2.7658PHT						
All engines	->year 01/05/88, version Ducellier, distr. num. 2525577A/B/C, distr. num. 2525578B, distr. num. 2525621, 2525579B			2.7667PHT						
All engines	02/05/88 ->, version Ducellier			2.7674PHT	3.7702RS	8.3619				
All engines	Kit, 02/05/88 ->, version Ducellier			2.7687						
All engines	version Bosch				3.7556RS					
All engines	->year 01/05/88, version Ducellier				3.7694					
All engines	02/05/88 ->						9.6005	C10		4.9376
All engines	->year 01/05/88								9.4005	

Vehicle	alim.	kW	Date	Engine
14 E	Petrol	52	04/83-07/89	ENGINE 150C, K1G

Engine	Information	A10	A20	A40	A50	A70	C10 - C30		C20	E01
All engines	->year 01/05/88, version Bosch			2.7524PHT						
All engines	02/05/88 ->, version Bosch, 02/05/88 ->			2.7530/11PHT						
All engines	->year 01/05/88, version Ducellier, distr. num. 2525578A, 2525579A			2.7658PHT						
All engines	->year 01/05/88, version Ducellier, distr. num. 2525577A/B/C, distr. num. 2525578B, distr. num. 2525621, 2525579B			2.7667PHT						
All engines	02/05/88 ->, version Ducellier			2.7674PHT	3.7702RS	8.3619				
All engines	Kit, 02/05/88 ->, version Ducellier			2.7687						
All engines	version Bosch				3.7556RS					
All engines	->year 01/05/88, version Ducellier				3.7694					
All engines	02/05/88 ->						9.6005	C10		4.9376
All engines	->year 01/05/88								9.4005	

Vehicle	alim.	kW	Date	Engine
14 E	Petrol	53	04/83-02/93	ENGINE 150C

Engine	Information	A10	A20	A40	A50	A70	C10 - C30		C20	E01
All engines	->year 01/05/88, version Bosch			2.7524PHT						
All engines	02/05/88 ->, version Bosch			2.7530/11PHT						
All engines	->year 01/05/88, version Ducellier, distr. num. 2525578A, 2525579A			2.7658PHT						
All engines	->year 01/05/88, version Ducellier, distr. num. 2525577A/B/C, distr. num. 2525578B, distr. num. 2525621, 2525579B			2.7667PHT						
All engines	02/05/88 ->, version Ducellier			2.7674PHT	3.7702RS	8.3619				
All engines	Kit, 02/05/88 ->, version Ducellier			2.7687						
All engines	version Bosch				3.7556RS					
All engines	->year 01/05/88, version Ducellier				3.7694					
All engines	02/05/88 ->						9.6005	C10		4.9376
All engines	->year 01/05/88								9.4005	

Vehicle	alim.	kW	Date	Engine
15	Petrol	58	01/87-01/92	ENGINE B1E (XU51C)

Engine	Information	A10	A20	A40	A50	A70	C10 - C30		C20	E01
All engines	version Bosch			2.7524PHT	3.7556RS					
All engines	->year 01/10/89, version Ducellier			2.7667PHT	3.7694	8.3617				
All engines	02/10/89 ->, version Ducellier			2.7674PHT	3.7702RS	8.3619				
All engines	Kit, 02/10/89 ->, version Ducellier			2.7687						
All engines	02/10/89 ->						9.6006	C10		
All engines	->year 01/10/89								9.4005	

A10	CONDENSER	A20	CONTACT SET	A40	DISTRIBUTOR CAP	A50	ROTOR	A70	PICK-UP
C10	COIL	C20	IGNITION MODULE	C30	ELECTRONIC IGNITION KIT	E01	IGNITION CABLE SET		

The present application list is a brief version. For the detailed information about the possibility of installation on a specific vehicle, please refer to our web-catalogue http://catalogo.facet.eu/

Vehicle	alim.	kW	Date	Engine	FUNCTIONS ON THE VEHICLE: A10	A20	A40	A50	A70	C10 - C30	C20	E01
15	Petrol	59	10/87-05/92	ENGINE B1E (XU51C)								

Engine	Information	A10	A20	A40	A50	A70	C10 - C30	C20	E01
All engines	version Bosch			2.7524PHT	3.7556RS				
All engines	->year 01/10/89, version Ducellier			2.7667PHT	3.7694	8.3617			
All engines	02/10/89 ->, version Ducellier			2.7674PHT	3.7702RS	8.3619			
All engines	Kit, 02/10/89 ->, version Ducellier			2.7687					
All engines	02/10/89 ->						9.6006 C10		
All engines	->year 01/10/89							9.4005	

16	Petrol	53	01/87-12/94	ENGINE B1E (XU51C)								

Engine	Information	A10	A20	A40	A50	A70	C10 - C30	C20	E01
All engines	version Bosch			2.7524PHT	3.7556RS				
All engines	->year 01/10/89, version Ducellier			2.7667PHT	3.7694	8.3617			
All engines	version Ducellier, 02/10/89 ->			2.7674PHT	3.7702RS	8.3619			
All engines	Kit, version Ducellier, 02/10/89 ->			2.7687					
All engines	02/10/89 ->						9.6006 C10		
All engines	->year 01/10/89							9.4005	

16	Petrol	55	09/88-12/94	ENGINE BAY (XU5CP), BAZ (XU5CP)								

Engine	Information	A10	A20	A40	A50	A70	C10 - C30	C20	E01
All engines	version Bosch, FOR: (D), FOR: (S), FOR: (CH)			2.7524PHT					
All engines	version Bosch, 28/03/88 ->			2.7530/11PHT					
All engines	->year 27/03/88, version Ducellier			2.7658PHT					
All engines	version Ducellier, FOR: (A), FOR: (S), 01/07/87 ->, FOR: (CH)			2.7667PHT	3.7694	8.3617			
All engines	28/03/88 ->, version Ducellier			2.7674PHT	3.7702RS	8.3619			
All engines	Kit, 28/03/88 ->, version Ducellier			2.7687					
All engines	version Bosch				3.7556RS				
All engines	28/03/88 ->						9.6006 C10		
All engines	->year 27/03/88							9.4005	

16	Petrol	58	09/87-02/93	ENGINE 23DH								

Engine	Information	A10	A20	A40	A50	A70	C10 - C30	C20	E01
All engines	version Bosch			2.7524PHT	3.7556RS				
All engines	->year 01/10/89, version Ducellier			2.7667PHT	3.7694	8.3617			
All engines	version Ducellier, 02/10/89 ->			2.7674PHT	3.7702RS	8.3619			
All engines	Kit, version Ducellier, 02/10/89 ->			2.7687					
All engines	02/10/89 ->						9.6006 C10		
All engines	->year 01/10/89							9.4005	

16	Petrol	64	07/85-12/94	ENGINE 171D								

Engine	Information	A10	A20	A40	A50	A70	C10 - C30	C20	E01
All engines	version Bosch, FOR: (D), FOR: (S), FOR: (CH)			2.7524PHT					
All engines	version Bosch, 28/03/88 ->			2.7530/11PHT					
All engines	->year 27/03/88, version Ducellier			2.7658PHT					
All engines	version Ducellier, FOR: (A), FOR: (S), 01/07/87 ->, FOR: (CH)			2.7667PHT	3.7694	8.3617			
All engines	28/03/88 ->, version Ducellier			2.7674PHT	3.7702RS	8.3619			
All engines	Kit, 28/03/88 ->, version Ducellier			2.7687					
All engines	version Bosch				3.7556RS				
All engines	28/03/88 ->						9.6006 C10		
All engines	->year 27/03/88							9.4005	

16	Petrol	65	05/89-12/94	ENGINE BDY (XU5M), BDZ (XU5M)								

Engine	Information	A10	A20	A40	A50	A70	C10 - C30	C20	E01
All engines	->year 28/04/91, version Ducellier			2.7674PHT	3.7702RS				
All engines	->year 28/04/91, Kit, version Ducellier			2.7687					
All engines	->year 28/04/91						9.6006 C10		
All engines	29/04/91 ->						9.6088 C10		4.8674

A10	CONDENSER	A20	CONTACT SET	A40	DISTRIBUTOR CAP	A50	ROTOR	A70	PICK-UP
C10	COIL	C20	IGNITION MODULE	C30	ELECTRONIC IGNITION KIT	E01	IGNITION CABLE SET		

The present application list is a brief version. For the detailed information about the possibility of installation on a specific vehicle, please refer to our web-catalogue http://catalogo.facet.eu/

Vehicle	alim.	kW	Date	Engine	FUNCTIONS ON THE VEHICLE A10	A20	A40	A50	A70	C10 - C30	C20	E01
16	Petrol	66	10/82-06/88	ENGINE 171A, 171B, 171C								

Engine	Information	A10	A20	A40	A50	A70	C10 - C30	C20	E01
All engines	version Bosch, FOR: (D), FOR: (S), FOR: (CH)			2.7524PHT					
All engines	version Bosch, 28/03/88 ->			2.7530/11PHT					
All engines	->year 27/03/88, version Ducellier			2.7658PHT					
All engines	version Ducellier, FOR: (A), FOR: (S), 01/07/87 ->, FOR: (CH)			2.7667PHT	3.7694	8.3617			
All engines	28/03/88 ->, version Ducellier			2.7674PHT	3.7702RS	8.3619			
All engines	Kit, 28/03/88 ->, version Ducellier			2.7687					
All engines	version Bosch				3.7556RS				
All engines	28/03/88 ->						9.6006 C10		
All engines	->year 27/03/88							9.4005	

16	Petrol	68	04/83-01/92	ENGINE 171C

Engine	Information	A10	A20	A40	A50	A70	C10 - C30	C20	E01
All engines	version Bosch, FOR: (D), FOR: (S), FOR: (CH)			2.7524PHT					
All engines	version Bosch, 28/03/88 ->			2.7530/11PHT					
All engines	->year 27/03/88, version Ducellier			2.7658PHT					
All engines	version Ducellier, FOR: (A), FOR: (S), 01/07/87 ->, FOR: (CH)			2.7667PHT	3.7694	8.3617			
All engines	28/03/88 ->, version Ducellier			2.7674PHT	3.7702RS	8.3619			
All engines	Kit, 28/03/88 ->, version Ducellier			2.7687					
All engines	version Bosch				3.7556RS				
All engines	28/03/88 ->						9.6006 C10		
All engines	->year 27/03/88							9.4005	

16	Petrol	76	03/86-12/94	ENGINE 180Z

Engine	Information	A10	A20	A40	A50	A70	C10 - C30	C20	E01
All engines	->year 31/10/89, version Bosch			2.7524PHT					
All engines	01/11/89 ->, version Bosch			2.7530/11PHT					
All engines	version Bosch				3.7556RS				
All engines	01/11/89 ->						9.6005 C10		4.8491
All engines								9.4005	
All engines	->year 31/10/89								4.8747

16 E	Petrol	65	05/89-02/93	ENGINE BDY (XU5M), BDZ (XU5M)

Engine	Information	A10	A20	A40	A50	A70	C10 - C30	C20	E01
All engines	->year 28/04/91, version Ducellier			2.7674PHT	3.7702RS				
All engines	->year 28/04/91, Kit, version Ducellier			2.7687					
All engines	->year 28/04/91						9.6006 C10		
All engines	29/04/91 ->						9.6088 C10		4.8674

19	Petrol	70	09/86-12/89	ENGINE D2C (XU92C)

Engine	Information	A10	A20	A40	A50	A70	C10 - C30	C20	E01
All engines	distr. num. 0237009058, distr. num. 0237009068, version Bosch			2.7524PHT					
All engines	distr. num. 0237009623, version Bosch			2.7530/11PHT					
All engines	distr. num. 2525691, distr. num. 2525692A, distr. num. 2525692B, version Ducellier			2.7667PHT	3.7694	8.3617			
All engines	distr. num. 2525717A, 2525747, version Ducellier			2.7674PHT	3.7702RS	8.3619			
All engines	Kit, distr. num. 2525717A, 2525747, version Ducellier			2.7687					
All engines	version Bosch				3.7556RS				
All engines	23/05/89 ->						9.6006 C10		
All engines	->year 22/05/89							9.4005	

19	Petrol	75	07/86-12/94	ENGINE 159A, D2A (XU92C)

Engine	Information	A10	A20	A40	A50	A70	C10 - C30	C20	E01
All engines	distr. num. 0237009058, distr. num. 0237009068, version Bosch			2.7524PHT					
All engines	distr. num. 0237009623, version Bosch			2.7530/11PHT					
All engines	distr. num. 2525691, distr. num. 2525692A, distr. num. 2525692B, version Ducellier			2.7667PHT	3.7694	8.3617			
All engines	distr. num. 2525717A, 2525747, version Ducellier			2.7674PHT	3.7702RS	8.3619			
All engines	Kit, distr. num. 2525717A, 2525747, version Ducellier			2.7687					
All engines	version Bosch				3.7556RS				

A10	CONDENSER	A20	CONTACT SET	A40	DISTRIBUTOR CAP	A50	ROTOR	A70	PICK-UP
C10	COIL	C20	IGNITION MODULE	C30	ELECTRONIC IGNITION KIT	E01	IGNITION CABLE SET		

The present application list is a brief version. For the detailed information about the possibility of installation on a specific vehicle, please refer to our web-catalogue http://catalogo.facet.eu/

Vehicle	alim.	kW	Date	Engine	FUNCTIONS ON THE VEHICLE A10	A20	A40	A50	A70	C10 - C30	C20	E01
19	Petrol	75	07/86-12/94	ENGINE 159A, D2A (XU92C)								

Engine	Information	A10	A20	A40	A50	A70	C10 - C30	C20	E01
All engines	23/05/89 ->						9.6006 C10		
All engines	->year 22/05/89							9.4005	

19	Petrol	76	01/87-01/92	ENGINE D2A (XU92C)

Engine	Information	A10	A20	A40	A50	A70	C10 - C30	C20	E01
All engines	distr. num. 0237009058, distr. num. 0237009068, version Bosch			2.7524PHT					
All engines	distr. num. 0237009623, version Bosch			2.7530/11PHT					
All engines	distr. num. 2525691, distr. num. 2525692A, distr. num. 2525692B, version Ducellier			2.7667PHT	3.7694	8.3617			
All engines	distr. num. 2525717A, 2525747, version Ducellier			2.7674PHT	3.7702RS	8.3619			
All engines	Kit, distr. num. 2525717A, 2525747, version Ducellier			2.7687					
All engines	version Bosch				3.7556RS				
All engines	23/05/89 ->						9.6006 C10		
All engines	->year 22/05/89							9.4005	

19	Petrol	77	07/86-05/89	ENGINE D2A (XU92C)

Engine	Information	A10	A20	A40	A50	A70	C10 - C30	C20	E01
All engines	distr. num. 0237009058, distr. num. 0237009068, version Bosch			2.7524PHT					
All engines	distr. num. 0237009623, version Bosch			2.7530/11PHT					
All engines	distr. num. 2525691, distr. num. 2525692A, distr. num. 2525692B, version Ducellier			2.7667PHT	3.7694	8.3617			
All engines	distr. num. 2525717A, 2525747, version Ducellier			2.7674PHT	3.7702RS	8.3619			
All engines	Kit, distr. num. 2525717A, 2525747, version Ducellier			2.7687					
All engines	version Bosch				3.7556RS				
All engines	23/05/89 ->						9.6006 C10		
All engines	->year 22/05/89							9.4005	

19	Petrol	78	09/84-01/92	ENGINE D2E

Engine	Information	A10	A20	A40	A50	A70	C10 - C30	C20	E01
All engines	distr. num. 0237009058, distr. num. 0237009068, version Bosch			2.7524PHT					
All engines	distr. num. 0237009623, version Bosch			2.7530/11PHT					
All engines	distr. num. 2525691, distr. num. 2525692A, distr. num. 2525692B, version Ducellier			2.7667PHT	3.7694	8.3617			
All engines	distr. num. 2525717A, 2525747, version Ducellier			2.7674PHT	3.7702RS	8.3619			
All engines	Kit, distr. num. 2525717A, 2525747, version Ducellier			2.7687					
All engines	version Bosch				3.7556RS				
All engines	23/05/89 ->						9.6006 C10		
All engines	->year 22/05/89							9.4005	

19	Petrol	80	06/88-12/94	ENGINE DDZ (XU9M)

Engine	Information	A10	A20	A40	A50	A70	C10 - C30	C20	E01
All engines	version Ducellier			2.7674PHT	3.7702RS				
All engines	Kit, version Ducellier			2.7687					

19	Petrol	88	06/88-12/94	ENGINE DKZ (XU9JA)

Engine	Information	A10	A20	A40	A50	A70	C10 - C30	C20	E01
All engines	version Bosch, ->year 05/06/88, version Export, FOR: (J)			2.7524PHT					
All engines	version Bosch, ->year 02/05/90			2.7530/11PHT					
All engines	version Ducellier, ->year 05/06/88, version Export, distr. num. 2525678, FOR: (J)			2.7667PHT	3.7694	8.3617			
All engines	version Ducellier, ->year 02/05/90, 06/06/88 ->, version Export, distr. num. 2525709A, FOR: (J)			2.7674PHT	3.7702RS				
All engines	Kit, version Ducellier, ->year 02/05/90, 06/06/88 ->, version Export, distr. num. 2525709A, FOR: (J)			2.7687					
All engines	->year 02/05/90, version Bosch, ->year 05/06/88, version Export, FOR: (J)				3.7556RS				
All engines	->year 02/05/90, version Ducellier					8.3619			
All engines	02/07/90 ->, version Export						9.6005 C10		
All engines	27/05/87 ->, ->year 02/05/90						9.6006 C10		
All engines	03/05/90 ->						9.6088 C10		
All engines	->year 26/05/87, version Export, FOR: (J)							9.4005	
All engines	27/05/87 ->, FOR: (A), ->year 02/05/90, FOR: (J)								4.8747

A10	CONDENSER	A20	CONTACT SET	A40	DISTRIBUTOR CAP	A50	ROTOR	A70	PICK-UP
C10	COIL	C20	IGNITION MODULE	C30	ELECTRONIC IGNITION KIT	E01	IGNITION CABLE SET		

The present application list is a brief version. For the detailed information about the possibility of installation on a specific vehicle, please refer to our web-catalogue http://catalogo.facet.eu/

Vehicle	alim.	kW	Date	Engine	FUNCTIONS ON THE VEHICLE A10	A20	A40	A50	A70	C10 - C30	C20	E01
19	Petrol	**90**	07/86-01/92	**D6A (XU9J2)**								

Engine	Information	A10	A20	A40	A50	A70	C10 - C30	C20	E01
All engines	version Bosch, ->year 05/06/88, version Export, FOR: (J)			2.7524PHT					
All engines	->year 02/05/90, version Bosch			2.7530/11PHT					
All engines	version Ducellier, ->year 05/06/88, version Export, distr. num. 2525678, FOR: (J)			2.7667PHT	3.7694	8.3617			
All engines	->year 02/05/90, version Ducellier, 06/06/88 ->, version Export, distr. num. 2525709A, FOR: (J)			2.7674PHT	3.7702RS				
All engines	Kit, ->year 02/05/90, version Ducellier, 06/06/88 ->, version Export, distr. num. 2525709A, FOR: (J)			2.7687					
All engines	->year 02/05/90, version Bosch, ->year 05/06/88, version Export, FOR: (J)				3.7556RS				
All engines	->year 02/05/90, version Ducellier					8.3619			
All engines	02/07/90 ->, version Export						9.6005 C10		
All engines	->year 02/05/90, 27/05/87 ->						9.6006 C10		
All engines	03/05/90 ->						9.6088 C10		
All engines	->year 26/05/87, version Export, FOR: (J)							9.4005	
All engines	->year 02/05/90, 27/05/87 ->, FOR: (A), FOR: (J)								4.8747

19 4x4	Petrol	80	10/90-05/91	DDZ (XU9M)

Engine	Information	A10	A20	A40	A50	A70	C10 - C30	C20	E01
All engines	version Ducellier			2.7674PHT	3.7702RS				
All engines	Kit, version Ducellier			2.7687					

19 Cat	Petrol	75	07/86-12/94	DFZ (XU9J1)

Engine	Information	A10	A20	A40	A50	A70	C10 - C30	C20	E01
All engines	version Bosch, ->year 05/06/88, version Export, FOR: (J)			2.7524PHT					
All engines	->year 02/05/90, version Bosch			2.7530/11PHT					
All engines	version Ducellier, ->year 05/06/88, version Export, distr. num. 2525678, FOR: (J)			2.7667PHT	3.7694	8.3617			
All engines	->year 02/05/90, version Ducellier, 06/06/88 ->, version Export, distr. num. 2525709A, FOR: (J)			2.7674PHT	3.7702RS				
All engines	Kit, ->year 02/05/90, version Ducellier, 06/06/88 ->, version Export, distr. num. 2525709A, FOR: (J)			2.7687					
All engines	->year 02/05/90, version Bosch, ->year 05/06/88, version Export, FOR: (J)				3.7556RS				
All engines	->year 02/05/90, version Ducellier					8.3619			
All engines	02/07/90 ->, version Export						9.6005 C10		
All engines	->year 02/05/90, 27/05/87 ->						9.6006 C10		
All engines	03/05/90 ->						9.6088 C10		
All engines	->year 26/05/87, version Export, FOR: (J)							9.4005	
All engines	->year 02/05/90, 27/05/87 ->, FOR: (A), FOR: (J)								4.8747

19 E	Petrol	80	06/88-02/93	DDZ (XU9M)

Engine	Information	A10	A20	A40	A50	A70	C10 - C30	C20	E01
All engines	version Ducellier			2.7674PHT	3.7702RS				
All engines	Kit, version Ducellier			2.7687					

19 E 4x4	Petrol	80	04/89-02/93	D2F

Engine	Information	A10	A20	A40	A50	A70	C10 - C30	C20	E01
All engines	distr. num. 0237009058, distr. num. 0237009068, version Bosch			2.7524PHT					
All engines	distr. num. 0237009623, version Bosch			2.7530/11PHT					
All engines	distr. num. 2525691, distr. num. 2525692A, distr. num. 2525692B, version Ducellier			2.7667PHT	3.7694	8.3617			
All engines	distr. num. 2525717A, 2525747, version Ducellier			2.7674PHT	3.7702RS	8.3619			
All engines	Kit, distr. num. 2525717A, 2525747, version Ducellier			2.7687					
All engines	version Bosch				3.7556RS				
All engines	23/05/89 ->						9.6006 C10		
All engines	->year 22/05/89							9.4005	

19 GTi	Petrol	88	06/88-02/93	DKZ (XU9JA)

Engine	Information	A10	A20	A40	A50	A70	C10 - C30	C20	E01
All engines	version Bosch, ->year 05/06/88, version Export, FOR: (J)			2.7524PHT					
All engines	->year 02/05/90, version Bosch			2.7530/11PHT					
All engines	version Ducellier, ->year 05/06/88, version Export, distr. num. 2525678, FOR: (J)			2.7667PHT	3.7694	8.3617			
All engines	->year 02/05/90, version Ducellier, 06/06/88 ->, version Export, distr. num. 2525709A, FOR: (J)			2.7674PHT	3.7702RS				

A10	CONDENSER	**A20**	CONTACT SET	**A40**	DISTRIBUTOR CAP	**A50**	ROTOR	**A70**	PICK-UP
C10	COIL	**C20**	IGNITION MODULE	**C30**	ELECTRONIC IGNITION KIT	**E01**	IGNITION CABLE SET		

The present application list is a brief version. For the detailed information about the possibility of installation on a specific vehicle, please refer to our web-catalogue http://catalogo.facet.eu/

Vehicle	alim.	kW	Date	Engine	FUNCTIONS ON THE VEHICLE: A10	A20	A40	A50	A70	C10 - C30	C20	E01
19 GTi	Petrol	88	06/88-02/93	**DKZ (XU9JA)**								

Engine	Information	A10	A20	A40	A50	A70	C10 - C30		C20	E01
All engines	Kit, ->year 02/05/90, version Ducellier, 06/06/88 ->, version Export, distr. num. 2525709A, FOR: (J)			2.7687						
All engines	->year 02/05/90, version Bosch, ->year 05/06/88, version Export, FOR: (J)				3.7556RS					
All engines	->year 02/05/90, version Ducellier					8.3619				
All engines	02/07/90 ->, version Export						9.6005	C10		
All engines	->year 02/05/90, 27/05/87 ->						9.6006	C10		
All engines	03/05/90 ->						9.6088	C10		
All engines	->year 26/05/87, version Export, FOR: (J)								9.4005	
All engines	->year 02/05/90, 27/05/87 ->, FOR: (A), FOR: (J)									4.8747

				ENGINE
19 GTi	Petrol	90	07/86-02/93	**D6A (XU9J2)**

Engine	Information	A10	A20	A40	A50	A70	C10 - C30		C20	E01
All engines	version Bosch, ->year 05/06/88, version Export, FOR: (J)			2.7524PHT						
All engines	->year 02/05/90, version Bosch			2.7530/11PHT						
All engines	version Ducellier, ->year 05/06/88, version Export, distr. num. 2525678, FOR: (J)			2.7667PHT	3.7694	8.3617				
All engines	->year 02/05/90, version Ducellier, 06/06/88 ->, version Export, distr. num. 2525709A, FOR: (J)			2.7674PHT	3.7702RS					
All engines	Kit, ->year 02/05/90, version Ducellier, 06/06/88 ->, version Export, distr. num. 2525709A, FOR: (J)			2.7687						
All engines	->year 02/05/90, version Bosch, ->year 05/06/88, version Export, FOR: (J)				3.7556RS					
All engines	->year 02/05/90, version Ducellier					8.3619				
All engines	02/07/90 ->, version Export						9.6005	C10		
All engines	->year 02/05/90, 27/05/87 ->						9.6006	C10		
All engines	03/05/90 ->						9.6088	C10		
All engines	->year 26/05/87, version Export, FOR: (J)								9.4005	
All engines	->year 02/05/90, 27/05/87 ->, FOR: (A), FOR: (J)									4.8747

				ENGINE
19 GTi 16V	Petrol	108	03/88-02/93	**DFW (XU9J4)**

Engine	Information	A10	A20	A40	A50	A70	C10 - C30		C20	E01
All engines	version Ducellier			2.7677PHT	3.7704					
All engines	Kit, version Ducellier			2.7678PHT						
All engines							9.6006	C10	9.4005	

				ENGINE
19 GTi 16V	Petrol	116	09/87-12/88	**D6C (XU9J4)**

Engine	Information	A10	A20	A40	A50	A70	C10 - C30		C20	E01
All engines	version Ducellier			2.7677PHT	3.7704					
All engines	Kit, version Ducellier			2.7678PHT						
All engines							9.6006	C10	9.4005	

				ENGINE
19 GTi 4x4	Petrol	88	06/88-02/93	**DKZ (XU9JA)**

Engine	Information	A10	A20	A40	A50	A70	C10 - C30		C20	E01
All engines	version Bosch, ->year 05/06/88, version Export, FOR: (J)			2.7524PHT						
All engines	->year 02/05/90, version Bosch			2.7530/11PHT						
All engines	version Ducellier, ->year 05/06/88, version Export, distr. num. 2525678, FOR: (J)			2.7667PHT	3.7694	8.3617				
All engines	->year 02/05/90, version Ducellier, 06/06/88 ->, version Export, distr. num. 2525709A, FOR: (J)			2.7674PHT	3.7702RS					
All engines	Kit, ->year 02/05/90, version Ducellier, 06/06/88 ->, version Export, distr. num. 2525709A, FOR: (J)			2.7687						
All engines	->year 02/05/90, version Bosch, ->year 05/06/88, version Export, FOR: (J)				3.7556RS					
All engines	->year 02/05/90, version Ducellier					8.3619				
All engines	02/07/90 ->, version Export						9.6005	C10		
All engines	->year 02/05/90, 27/05/87 ->						9.6006	C10		
All engines	03/05/90 ->						9.6088	C10		
All engines	->year 26/05/87, version Export, FOR: (J)								9.4005	
All engines	->year 02/05/90, 27/05/87 ->, FOR: (A), FOR: (J)									4.8747

C1 I

				ENGINE
1.0	Petrol	50	06/05-09/14	**CFA (384F), CFB (1KR)**

Engine	Information	A10	A20	A40	A50	A70	C10 - C30		C20	E01
All engines	x 3, COIL ON PLUG						9.6361	C10		

A10	CONDENSER	**A20**	CONTACT SET	**A40**	DISTRIBUTOR CAP	**A50**	ROTOR	**A70**	PICK-UP
C10	COIL	**C20**	IGNITION MODULE	**C30**	ELECTRONIC IGNITION KIT	**E01**	IGNITION CABLE SET		

The present application list is a brief version. For the detailed information about the possibility of installation on a specific vehicle, please refer to our web-catalogue http://catalogo.facet.eu/

C1 II

Vehicle	alim.	kW	Date	Engine	A10	A20	A40	A50	A70	C10 - C30	C20	E01
1.0 VTi 68	Petrol	51	04/14->	CFB (1KR)								
All engines	euro5/euro6, x 3, COIL ON PLUG									9.6359 C10		
1.0 VTi 72	Petrol	53	06/18->	CFB (1KR)								
All engines	euro5/euro6, x 3, COIL ON PLUG									9.6359 C10		
1.2 VTi 82	Petrol	60	04/14->	177L, HMT (EB2D), HMZ (EB2F)								
All engines	x 3, COIL ON PLUG									9.6509 C10		

C15

Vehicle	alim.	kW	Date	Engine	A10	A20	A40	A50	A70	C10 - C30	C20	E01
1.0	Petrol	30	10/84-07/88	108C								
All engines	version Bosch						2.7524PHT	3.7556RS				
All engines	version Ducellier						2.7658PHT	3.7694				
All engines											9.4005	
1.0	Petrol	32	07/86-10/92	C1A								
All engines	version Bosch						2.7530/11PHT	3.7556RS				
All engines	version Ducellier						2.7674PHT	3.7702RS	8.3619			
All engines	Kit, version Ducellier						2.7687					
All engines										9.6005 C10		4.9376
1.0	Petrol	33	10/84-12/97	108C (XV8), C1A (TU9/K), C1B (TU9/W), TU9								
All engines	version Bosch						2.7530/11PHT	3.7556RS				
All engines	version Ducellier						2.7674PHT	3.7702RS	8.3619			
All engines	Kit, version Ducellier						2.7687					
All engines										9.6005 C10		4.9376
1.0 E	Petrol	37	11/92-07/96	TU9K								
All engines	version Bosch						2.7524PHT	3.7556RS				
All engines	version Ducellier						2.7658PHT	3.7694				
All engines											9.4005	
1.1	Petrol	35	10/84-12/96	109K, E1A								
All engines	version Bosch						2.7524PHT					
All engines	version Ducellier						2.7658PHT	3.7694				
Eng. 109K	version Bosch							3.7556RS				
Eng. E1A	version Bosch							3.7561RS				
Eng. E1A										9.6006 C10		
All engines											9.4005	
1.1	Petrol	36	06/85-10/88	XW7								
All engines	version Bosch						2.7524PHT	3.7556RS				
All engines	version Ducellier						2.7658PHT	3.7694				
All engines											9.4005	
1.1	Petrol	40	11/88-07/96	H1A								
All engines	version Bosch						2.7530/11PHT	3.7556RS				
All engines	version Ducellier						2.7674PHT	3.7702RS	8.3619			
All engines	Kit, version Ducellier						2.7687					

A10	CONDENSER	**A20**	CONTACT SET	**A40**	DISTRIBUTOR CAP	**A50**	ROTOR	**A70**	PICK-UP
C10	COIL	**C20**	IGNITION MODULE	**C30**	ELECTRONIC IGNITION KIT	**E01**	IGNITION CABLE SET		

The present application list is a brief version. For the detailed information about the possibility of installation on a specific vehicle, please refer to our web-catalogue http://catalogo.facet.eu/

Vehicle	alim.	kW	Date	Engine	FUNCTIONS ON THE VEHICLE A10	A20	A40	A50	A70	C10 - C30	C20	E01
1.1	Petrol	40	11/88-07/96	**ENGINE H1A**								
Engine: All engines	Information:									9.6005 C10		4.9376
1.1	Petrol	44	08/88-07/96	**ENGINE HDZ (TU1M)**								
All engines	version Bosch						2.7530/11PHT	3.7556RS				
All engines	version Ducellier						2.7674PHT	3.7702RS	8.3619			
All engines	Kit, version Ducellier						2.7687					
All engines										9.6005 C10		4.9376
1.1 i	Petrol	44	07/88-12/96	**ENGINE HDZ (TU1M), TU1MZ**								
All engines	version Bosch						2.7530/11PHT	3.7556RS				
All engines	version Ducellier						2.7674PHT	3.7702RS	8.3619			
All engines	Kit, version Ducellier						2.7687					
All engines										9.6005 C10		4.9376
1.3	Petrol	47	07/87-05/88	**ENGINE G1A**								
All engines	version Bosch						2.7524PHT	3.7561RS				
All engines	version Ducellier						2.7658PHT	3.7694				
All engines										9.6006 C10	9.4005	
1.4	Petrol	44	05/87-10/92	**ENGINE 150D (XY7)**								
All engines	version Bosch						2.7524PHT	3.7556RS				
All engines	version Ducellier						2.7667PHT	3.7694				
All engines											9.4005	
1.4	Petrol	49	07/87-12/96	**ENGINE K1H (TU3A)**								
All engines	version Bosch						2.7530/11PHT	3.7556RS				
All engines	version Ducellier						2.7674PHT	3.7702RS	8.3619			
All engines	Kit, version Ducellier						2.7687					
All engines										9.6005 C10		4.9376
1.4	Petrol	51	08/87-04/91	**ENGINE K1G**								
All engines	version Bosch						2.7530/11PHT	3.7556RS				
All engines	version Ducellier						2.7674PHT	3.7702RS	8.3619			
All engines	Kit, version Ducellier						2.7687					
All engines										9.6005 C10		4.9376
1.4	Petrol	55	05/91-07/96	**ENGINE KDY (TU3M)**								
All engines	version Bosch						2.7530/11PHT	3.7556RS				
All engines	version Ducellier						2.7674PHT	3.7702RS	8.3619			
All engines	Kit, version Ducellier						2.7687					
All engines										9.6005 C10		4.9376
1.4 E	Petrol	40	07/86-12/96	**ENGINE K3A, KAZ**								
All engines	version Bosch						2.7530/11PHT	3.7556RS				
All engines	version Ducellier						2.7674PHT	3.7702RS	8.3619			
All engines	Kit, version Ducellier						2.7687					
All engines										9.6005 C10		4.9376
1.4 E	Petrol	44	05/87-12/96	**ENGINE 150D (XY7)**								
All engines	version Bosch						2.7524PHT	3.7556RS				

A10	CONDENSER	**A20**	CONTACT SET	**A40**	DISTRIBUTOR CAP	**A50**	ROTOR	**A70**	PICK-UP
C10	COIL	**C20**	IGNITION MODULE	**C30**	ELECTRONIC IGNITION KIT	**E01**	IGNITION CABLE SET		

The present application list is a brief version. For the detailed information about the possibility of installation on a specific vehicle, please refer to our web-catalogue http://catalogo.facet.eu/

Vehicle	alim.	kW	Date	Engine	FUNCTIONS ON THE VEHICLE A10	A20	A40	A50	A70	C10 - C30	C20	E01
1.4 E	Petrol	44	05/87-12/96	150D (XY7)								
All engines	version Ducellier						2.7667PHT	3.7694				
All engines											9.4005	
1.4 E	Petrol	52	08/87-10/92	K1F								
All engines	version Bosch						2.7530/11PHT	3.7556RS				
All engines	version Ducellier						2.7674PHT	3.7702RS	8.3619			
All engines	Kit, version Ducellier						2.7687					
All engines										9.6005 C10		4.9376
1.4 E	Petrol	55	05/91-12/96	K2D								
All engines	version Bosch						2.7530/11PHT	3.7556RS				
All engines	version Ducellier						2.7674PHT	3.7702RS	8.3619			
All engines	Kit, version Ducellier						2.7687					
All engines										9.6005 C10		4.9376
1.4 i	Petrol	55	05/91-12/96	KDY (TU3FM), KDY (TU3M)								
All engines	version Bosch						2.7530/11PHT	3.7556RS				
All engines	version Ducellier						2.7674PHT	3.7702RS	8.3619			
All engines	Kit, version Ducellier						2.7687					
All engines										9.6005 C10		4.9376
C2												
1.1	Petrol	44	09/03-09/12	HFX (TU1JP)								
All engines										9.6305 C10		
1.4	Petrol	54	09/03-12/09	KFV (TU3JP)								
All engines										9.6305 C10		
1.4	Petrol	55	10/06-12/09	KFV (TU3JP)								
All engines	x 1, COIL ON PLUG									9.6305 C10		
1.4 16V	Petrol	65	04/05-12/09	KFU (ET3J4)								
All engines	x 1, COIL ON PLUG									9.6383 C10		
1.6	Petrol	80	07/03-10/10	NFU (TU5JP4)								
All engines	x 1, COIL ON PLUG									9.6307 C10		
1.6 VTS	Petrol	90	10/04-12/09	NFS (TU5JP4S)								
All engines	x 1, COIL ON PLUG									9.6307 C10		
C3 AIRCROSS												
1.2 PureTech 82	Petrol	60	06/17->	HMR (EB2FA), HMZ (EB2F)								
All engines	x 3, COIL ON PLUG									9.6509 C10		
PureTech 82	Petrol	60	05/19->	HMZ (EB2F)								
All engines	x 3, COIL ON PLUG									9.6509 C10		

A10	CONDENSER	A20	CONTACT SET	A40	DISTRIBUTOR CAP	A50	ROTOR	A70	PICK-UP
C10	COIL	C20	IGNITION MODULE	C30	ELECTRONIC IGNITION KIT	E01	IGNITION CABLE SET		

The present application list is a brief version. For the detailed information about the possibility of installation on a specific vehicle, please refer to our web-catalogue http://catalogo.facet.eu/

Vehicle	alim.	kW	Date	Engine	FUNCTIONS ON THE VEHICLE A10	A20	A40	A50	A70	C10 - C30	C20	E01
PureTech 82	Petrol	81	05/19->	**HNZ (EB2DT)**								
Engine: All engines — Information: x 3, COIL ON PLUG										9.6520 C10		
C3 I												
1.1 i	Petrol	44	02/02->	**HFX (TU1A), HFX (TU1JP)**								
Engine: All engines										9.6305 C10		
1.1 LPG	Petrol/ Liquified Petro-leum Gas (LPG)	44	06/06-12/09	**HFX (TU1A)**								
Engine: All engines — Information: x 4, COIL ON PLUG										9.6305 C10		
1.4 16V	Petrol	65	12/03->	**KFU (ET3J4)**								
Engine: All engines — Information: x 1, COIL ON PLUG										9.6383 C10		
1.4 BiFuel	Petrol/ Liquified Petro-leum Gas (LPG)	54	09/08-12/09	**KFV (TU3JP)**								
Engine: All engines — Information: x 1, COIL ON PLUG										9.6305 C10		
1.4 i	Petrol	54	02/02-11/10	**KFV (TU3A), KFV (TU3JP)**								
Engine: All engines — Information: x 1, COIL ON PLUG										9.6305 C10		
1.4 i Bivalent	Petrol/ Com-pressed Natural Gas (CNG)	54	02/02->	**KFV (TU3JP)**								
Engine: All engines — Information: x 1, COIL ON PLUG										9.6305 C10		
1.6 16V	Petrol	80	02/02->	**N6A (TU5JP4), NFU (TU5JP4)**								
Engine: Eng. N6A (TU5JP4) — Information:										9.6307 C10		
Engine: Eng. NFU (TU5JP4) — Information: x 1, COIL ON PLUG										9.6307 C10		
1.6 16V	Petrol	81	05/03-09/05	**NFU (TU5JP4)**								
Engine: All engines — Information: x 1, COIL ON PLUG										9.6307 C10		
C3 I PLURIEL												
1.4	Petrol	54	05/03->	**KFV (TU3A), KFV (TU3JP)**								
Engine: All engines — Information: x 1, COIL ON PLUG										9.6305 C10		
1.4	Petrol	55	07/03->	**KFV (TU3A)**								
Engine: All engines — Information: x 4, COIL ON PLUG										9.6305 C10		
1.4 Hybrid	Petrol/ Electric	54	05/05->	**KFV (TU3JP)**								
Engine: All engines — Information:										9.6305 C10		

A10	CONDENSER	A20	CONTACT SET	A40	DISTRIBUTOR CAP	A50	ROTOR	A70	PICK-UP
C10	COIL	C20	IGNITION MODULE	C30	ELECTRONIC IGNITION KIT	E01	IGNITION CABLE SET		

The present application list is a brief version. For the detailed information about the possibility of installation on a specific vehicle, please refer to our web-catalogue http://catalogo.facet.eu/

Vehicle	alim.	kW	Date	Engine	FUNCTIONS ON THE VEHICLE A10	A20	A40	A50	A70	C10 - C30	C20	E01
1.6	Petrol	80	05/03->	ENGINE NFU (TU5JP4)								
Engine: All engines	Information: x 1, COIL ON PLUG									9.6307 C10		
C3 II												
1.0 VTi 68	Petrol	50	08/12->	ENGINE ZMZ (EB0)								
Engine: All engines	Information: x 3, COIL ON PLUG									9.6509 C10		
1.1 BiFuel	Petrol/ Liquified Petro- leum Gas (LPG)	44	11/10->	ENGINE HFX (TU1A)								
Engine: All engines	Information: x 4, COIL ON PLUG									9.6305 C10		
1.1 i	Petrol	44	09/09-01/13	ENGINE HFV (TU1A), HFX (TU1A)								
Engine: All engines	Information: x 1, COIL ON PLUG									9.6305 C10		
1.2 THP 110	Petrol	81	10/14->	ENGINE HNZ (EB2DT)								
Engine: All engines	Information: x 3, COIL ON PLUG									9.6520 C10		
1.2 VTi 82	Petrol	60	06/12-09/16	ENGINE 177L, HMZ (EB2F)								
Engine: All engines	Information: x 3, COIL ON PLUG									9.6509 C10		
1.4	Petrol	54	11/09-09/16	ENGINE K6E (TU3A), KFT (TU3A), KFT (TU3AE5)								
Engine: All engines	Information: x 4, COIL ON PLUG									9.6305 C10		
1.4 16V	Petrol	70	11/09->	ENGINE EP3C								
Engine: All engines	Information: Qty: 4									9.6375 C10		
1.4 i	Petrol	55	11/09->	ENGINE TU 3 JP								
Engine: All engines	Information:									9.6305 C10		
1.4 LPG	Petrol/ Liquified Petro- leum Gas (LPG)	54	07/10->	ENGINE KFT (TU3A)								
Engine: All engines	Information: x 4, COIL ON PLUG									9.6305 C10		
1.4 LPG	Petrol/ Liquified Petro- leum Gas (LPG)	70	06/13->	ENGINE 8FN (EP3)								
Engine: All engines	Information: x 4, COIL ON PLUG									9.6375 C10		
1.4 VTi	Petrol	72	11/09->	ENGINE 8FR (EP3)								
Engine: All engines	Information: x 4, COIL ON PLUG									9.6375 C10		
1.4 VTi 95	Petrol	70	11/09->	ENGINE 8FP (EP3C)								
Engine: All engines	Information: x 4, COIL ON PLUG									9.6375 C10		

A10	CONDENSER	A20	CONTACT SET	A40	DISTRIBUTOR CAP	A50	ROTOR	A70	PICK-UP
C10	COIL	C20	IGNITION MODULE	C30	ELECTRONIC IGNITION KIT	E01	IGNITION CABLE SET		

The present application list is a brief version. For the detailed information about the possibility of installation on a specific vehicle, please refer to our web-catalogue http://catalogo.facet.eu/

Vehicle	alim.	kW	Date	Engine	FUNCTIONS ON THE VEHICLE A10	A20	A40	A50	A70	C10 - C30	C20	E01
1.6 Flex	Petrol/ Ethanol	81	11/09->	ENGINE NFX (TU5JP4)								
Engine: All engines	Information:									9.6307 C10		
1.6 VTi 120	Petrol	88	11/09->	ENGINE 5FS (EP6C)								
Engine: All engines	Information: x 4, COIL ON PLUG									9.6375 C10		
C3 III												
1.2 PureTech 82	Petrol	61	05/18->	ENGINE HMR (EB2FA)								
Engine: All engines	Information: x 3, COIL ON PLUG									9.6509 C10		
1.2 PureTech 82 LPG	Petrol/ Liquified Petro-leum Gas (LPG)	61	05/18->	ENGINE HMR (EB2FA)								
Engine: All engines	Information: x 3, COIL ON PLUG									9.6509 C10		
1.2 VTi 68	Petrol	50	07/16->	ENGINE HMM (EB2FAD), HMP (EB2FB)								
Engine: All engines	Information: x 3, COIL ON PLUG									9.6509 C10		
1.2 VTi 82	Petrol	60	07/16->	ENGINE HMZ (EB2F)								
Engine: All engines	Information: x 3, COIL ON PLUG									9.6509 C10		
1.2 VTi 82 LPG	Petrol/ Liquified Petro-leum Gas (LPG)	60	07/16->	ENGINE HMZ (EB2F)								
Engine: All engines	Information: x 3, COIL ON PLUG									9.6509 C10		
PureTech 110	Petrol	81	03/19->	ENGINE HNZ (EB2DT)								
Engine: All engines	Information: x 3, COIL ON PLUG									9.6520 C10		
PureTech 82	Petrol	61	03/19->	ENGINE HMR (EB2FA)								
Engine: All engines	Information: x 3, COIL ON PLUG									9.6509 C10		
C3 PICASSO												
1.2 THP 110	Petrol	81	01/15->	ENGINE HNZ (EB2DT)								
Engine: All engines	Information: x 3, COIL ON PLUG									9.6520 C10		
1.4 VTi 95	Petrol	70	02/09->	ENGINE 8FN (EP3), 8FP (EP3C), 8FS (EP3)								
Engine: All engines	Information: x 4, COIL ON PLUG									9.6375 C10		
1.4 VTi 95 LPG	Petrol/ Liquified Petro-leum Gas (LPG)	70	01/12->	ENGINE 8FN (EP3)								
Engine: All engines	Information: x 4, COIL ON PLUG									9.6375 C10		

A10	CONDENSER	A20	CONTACT SET	A40	DISTRIBUTOR CAP	A50	ROTOR	A70	PICK-UP
C10	COIL	C20	IGNITION MODULE	C30	ELECTRONIC IGNITION KIT	E01	IGNITION CABLE SET		

The present application list is a brief version. For the detailed information about the possibility of installation on a specific vehicle, please refer to our web-catalogue http://catalogo.facet.eu/

Vehicle	alim.	kW	Date	Engine	FUNCTIONS ON THE VEHICLE							
					A10	A20	A40	A50	A70	C10 - C30	C20	E01
1.6 VTi	Petrol	84	07/09->	ENGINE: 5FP (EP6)								
Engine: All engines	Information: x 4, COIL ON PLUG									9.6375 C10		
1.6 VTi 120	Petrol	88	02/09->	ENGINE: 5FS (EP6C), 5FW (EP6)								
Engine: All engines	Information: x 4, COIL ON PLUG									9.6375 C10		
C4 AIRCROSS												
1.6	Petrol	86	04/12->	ENGINE: 4A92, NKZ (4A92)								
Engine: All engines	Information: x 4, COIL ON PLUG									9.6405 C10		
2.0	Petrol	110	04/12->	ENGINE: 4B11								
Engine: All engines	Information: Qty: 4									9.6397 C10		
Engine: All engines	Information: x 4, COIL ON PLUG									9.6397 C10		
2.0 AWC	Petrol	110	04/12->	ENGINE: 4B11								
Engine: All engines	Information: Qty: 4									9.6397 C10		
Engine: All engines	Information: x 4, COIL ON PLUG									9.6397 C10		
C4 CACTUS												
1.2 VTi 75 / PureTech 75	Petrol	55	09/14->	ENGINE: HMU (EB2D), HMU (EB2FD)								
Engine: All engines	Information: x 3, COIL ON PLUG									9.6509 C10		
1.2 VTi 82	Petrol	60	09/14->	ENGINE: HMZ (EB2F)								
Engine: All engines	Information: x 3, COIL ON PLUG									9.6509 C10		
PureTech 130	Petrol	96	05/19->	ENGINE: HNY (EB2DTS)								
Engine: All engines	Information: x 3, COIL ON PLUG									9.6520 C10		
PureTech 82	Petrol	60	05/19->	ENGINE: 177L								
Engine: All engines	Information: x 3, COIL ON PLUG									9.6509 C10		
C4 GRAND PICASSO I												
1.6 16V	Petrol	103	07/08-12/10	ENGINE: 5FT (EP6DT)								
Engine: All engines	Information: x 4, COIL ON PLUG									9.6375 C10		
1.6 16V	Petrol	110	10/08-08/13	ENGINE: 5FX (EP6DT)								
Engine: All engines	Information: x 4, COIL ON PLUG									9.6375 C10		
1.6 16V	Petrol	88	07/08->	ENGINE: EP6C								
Engine: All engines	Information: Qty: 4									9.6375 C10		
1.6 THP 155	Petrol	115	09/10-08/13	ENGINE: 5FV (EP6CDT)								
Engine: All engines	Information: x 4, COIL ON PLUG									9.6375 C10		

A10	CONDENSER	**A20**	CONTACT SET	**A40**	DISTRIBUTOR CAP	**A50**	ROTOR	**A70**	PICK-UP
C10	COIL	**C20**	IGNITION MODULE	**C30**	ELECTRONIC IGNITION KIT	**E01**	IGNITION CABLE SET		

The present application list is a brief version. For the detailed information about the possibility of installation on a specific vehicle, please refer to our web-catalogue http://catalogo.facet.eu/

Vehicle	alim.	kW	Date	Engine	FUNCTIONS ON THE VEHICLE A10	A20	A40	A50	A70	C10 - C30	C20	E01
1.6 VTi 120	Petrol	88	07/08-08/13	**5FW (EP6)**						9.6375 C10		
All engines	x 4, COIL ON PLUG											
1.8 i 16V	Petrol	92	10/06-12/10	**6FY (EW7A)**						9.6376 C10		
All engines	x 1, COIL ON PLUG											
1.8 i 16V Flex	Petrol/ Ethanol	86	06/09-01/13	**6FY (EW7A)**						9.6376 C10		
All engines	x 1, COIL ON PLUG											
2.0 i 16V	Petrol	103	10/06-08/13	**RFJ (EW10A)**						9.6376 C10		
All engines	x 1, COIL ON PLUG											
2.0 i 16V	Petrol	105	01/10-08/13	**RFJ (EW10A)**						9.6376 C10		
All engines												
C4 GRAND PICASSO II												
1.2 THP 130	Petrol	96	04/14->	**HNY (EB2DTS)**						9.6520 C10		
All engines	x 3, COIL ON PLUG											
1.6 THP 150	Petrol	110	09/14->	**5FX (EP6DT)**						9.6375 C10		
All engines	x 4, COIL ON PLUG											
1.6 THP 155	Petrol	115	09/13->	**5FV (EP6CDT)**						9.6375 C10		
All engines	x 4, COIL ON PLUG											
1.6 THP 165	Petrol	121	07/14->	**5GZ (EP6FDT)**						9.6375 C10		
All engines	x 4, COIL ON PLUG											
1.6 VTi 120	Petrol	88	09/13->	**5FS (EP6C)**						9.6375 C10		
All engines	x 4, COIL ON PLUG											
C4 I												
1.4 16V	Petrol	65	11/04-07/11	**KFU (ET3J4)**						9.6383 C10		
All engines	x 1, COIL ON PLUG											
1.6 16V	Petrol	80	11/04-07/11	**NFU (TU5JP4)**						9.6307 C10		
All engines	x 1, COIL ON PLUG											
1.6 16V Bio-Flex	Petrol	80	09/07->	**N6A (TU5JP4)**						9.6307 C10		
All engines												
All engines	x 1, COIL ON PLUG											
1.6 16V Flex Fuel	Petrol	80	02/09->	**N6A (TU5JP4)**						9.6307 C10		
All engines												

A10	CONDENSER	**A20**	CONTACT SET	**A40**	DISTRIBUTOR CAP	**A50**	ROTOR	**A70**	PICK-UP
C10	COIL	**C20**	IGNITION MODULE	**C30**	ELECTRONIC IGNITION KIT	**E01**	IGNITION CABLE SET		

The present application list is a brief version. For the detailed information about the possibility of installation on a specific vehicle, please refer to our web-catalogue http://catalogo.facet.eu/

Vehicle	alim.	kW	Date	Engine	FUNCTIONS ON THE VEHICLE A10	A20	A40	A50	A70	C10 - C30	C20	E01
1.6 Flex	Petrol/ Ethanol	81	02/09-07/11	ENGINE --								
Engine: All engines	Information:									9.6307 C10		
1.6 THP	Petrol	103	06/08-07/11	ENGINE 5FT (EP6DT)								
Engine: All engines	Information: x 4, COIL ON PLUG									9.6375 C10		
1.6 THP 140	Petrol	103	07/08-07/11	ENGINE 5FT (EP6DT)								
Engine: All engines	Information: x 4, COIL ON PLUG									9.6375 C10		
1.6 THP 150	Petrol	110	07/08-07/11	ENGINE 5FX (EP6DT)								
Engine: All engines	Information: x 4, COIL ON PLUG									9.6375 C10		
1.6 VTi 120	Petrol	88	07/08-07/11	ENGINE 5FW (EP6)								
Engine: All engines	Information: x 4, COIL ON PLUG									9.6375 C10		
2.0 16V	Petrol	100	11/04-07/07	ENGINE RFN (EW10J4)								
Engine: All engines	Information: x 4, COIL ON PLUG									9.6308 C10		
2.0 16V	Petrol	103	11/04-07/11	ENGINE RFJ (EW10A)								
Engine: All engines	Information:									9.6376 C10		
Engine: All engines	Information: x 1, COIL ON PLUG									9.6376 C10		
2.0 16V	Petrol	105	09/06-07/09	ENGINE RFJ (EW10A)								
Engine: All engines	Information: x 1, COIL ON PLUG									9.6376 C10		
2.0 16V	Petrol	130	11/04-12/10	ENGINE RFK (EW10J4S)								
Engine: All engines	Information: x 4, COIL ON PLUG									9.6409 C10		
2.0 VTR	Petrol	103	10/06-12/07	ENGINE RFJ (EW10A)								
Engine: All engines	Information: x 1, COIL ON PLUG									9.6376 C10		
C4 II												
1.2 THP 110	Petrol	81	02/15-12/17	ENGINE 8D4HH, HNZ (EB2DT)								
Engine: All engines	Information: x 3, COIL ON PLUG									9.6520 C10		
1.2 THP 130	Petrol	96	04/14->	ENGINE HNY (EB2DTS)								
Engine: All engines	Information: x 3, COIL ON PLUG									9.6520 C10		
1.4 16V	Petrol	70	11/09->	ENGINE EP3C								
Engine: All engines	Information: Qty: 4									9.6375 C10		
1.4 VTi 95	Petrol	70	11/09->	ENGINE 8FP (EP3C)								
Engine: All engines	Information: x 4, COIL ON PLUG									9.6375 C10		

A10	CONDENSER	A20	CONTACT SET	A40	DISTRIBUTOR CAP	A50	ROTOR	A70	PICK-UP
C10	COIL	C20	IGNITION MODULE	C30	ELECTRONIC IGNITION KIT	E01	IGNITION CABLE SET		

The present application list is a brief version. For the detailed information about the possibility of installation on a specific vehicle, please refer to our web-catalogue http://catalogo.facet.eu/

Vehicle	alim.	kW	Date	Engine	FUNCTIONS ON THE VEHICLE A10	A20	A40	A50	A70	C10 - C30	C20	E01
1.6 16V	Petrol	147	10/10->	EP6FDTX								
Engine: All engines	Information: Qty: 4									9.6375 C10		
1.6 Flex	Petrol/ Ethanol	81	11/09->	NFX (TU5JP4)								
Engine: All engines	Information:									9.6307 C10		
1.6 THP 155	Petrol	115	11/09-12/16	5FV (EP6CDT)								
Engine: All engines	Information: x 4, COIL ON PLUG									9.6375 C10		
1.6 VTi 120	Petrol	88	11/09-12/16	5FS (EP6C)								
Engine: All engines	Information: x 4, COIL ON PLUG									9.6375 C10		
1.6 VTi 120 LPG	Petrol/ Liquified Petro-leum Gas (LPG)	88	09/11->	5FS (EP6C)								
Engine: All engines	Information: x 4, COIL ON PLUG									9.6375 C10		
2.0 Flex	Petrol/ Ethanol	103	11/09->	RFJ (EW10A)								
Engine: All engines	Information:									9.6376 C10		
C4 III												
1.2 PureTech 110	Petrol	81	04/18->	HNX (EB2DTSD)								
Engine: All engines	Information: x 3, COIL ON PLUG									9.6520 C10		
1.6 THP 165	Petrol	121	04/18->	5GZ (EP6FDT)								
Engine: All engines	Information: x 4, COIL ON PLUG									9.6375 C10		
PureTech 130	Petrol	96	05/19->	HNY (EB2DTS)								
Engine: All engines	Information: x 3, COIL ON PLUG									9.6520 C10		
C4 PICASSO I												
1.6 16V	Petrol	110	07/08-08/13	5FX (EP6DT)								
Engine: All engines	Information: x 4, COIL ON PLUG									9.6375 C10		
1.6 THP 140	Petrol	103	07/08-08/13	5FT (EP6DT)								
Engine: All engines	Information: x 4, COIL ON PLUG									9.6375 C10		
1.6 THP 155	Petrol	115	09/10-08/13	5FV (EP6CDT)								
Engine: All engines	Information: x 4, COIL ON PLUG									9.6375 C10		
1.6 VTi 120	Petrol	88	07/08-08/13	5FW (EP6)								
Engine: All engines	Information: x 4, COIL ON PLUG									9.6375 C10		

A10	CONDENSER	A20	CONTACT SET	A40	DISTRIBUTOR CAP	A50	ROTOR	A70	PICK-UP
C10	COIL	C20	IGNITION MODULE	C30	ELECTRONIC IGNITION KIT	E01	IGNITION CABLE SET		

The present application list is a brief version. For the detailed information about the possibility of installation on a specific vehicle, please refer to our web-catalogue http://catalogo.facet.eu/

Vehicle	alim.	kW	Date	Engine	FUNCTIONS ON THE VEHICLE A10	A20	A40	A50	A70	C10 - C30	C20	E01
1.8 Bifuel	Petrol/ Ethanol	92	01/09-10/12	6FY (EW7A)								
Engine: All engines	Information: x 1, COIL ON PLUG									9.6376 C10		
1.8 i 16V	Petrol	92	02/07-12/11	6FY (EW7A)								
Engine: All engines	Information: x 1, COIL ON PLUG									9.6376 C10		
2.0 i 16V	Petrol	103	09/07-08/13	RFJ (EW10A)								
Engine: All engines	Information: x 1, COIL ON PLUG									9.6376 C10		
C4 PICASSO II												
1.2 THP 130	Petrol	96	04/14->	HNY (EB2DTS)								
Engine: All engines	Information: x 3, COIL ON PLUG									9.6520 C10		
1.6 THP 150	Petrol	110	09/14->	5FX (EP6DT)								
Engine: All engines	Information: x 4, COIL ON PLUG									9.6375 C10		
1.6 THP 155	Petrol	115	02/13->	5FV (EP6CDT)								
Engine: All engines	Information: x 4, COIL ON PLUG									9.6375 C10		
1.6 THP 165	Petrol	121	07/14->	5GZ (EP6FDT)								
Engine: All engines	Information: x 4, COIL ON PLUG									9.6375 C10		
1.6 VTi 120	Petrol	88	02/13->	5FS (EP6C)								
Engine: All engines	Information: x 4, COIL ON PLUG									9.6375 C10		
THP 155	Petrol	115	02/13->	5FV (EP6CDT)								
Engine: All engines	Information: x 4, COIL ON PLUG									9.6375 C10		
VTi 120	Petrol	88	02/13->	5FS (EP6C)								
Engine: All engines	Information: x 4, COIL ON PLUG									9.6375 C10		
C5 AIRCROSS												
1.6 Hybrid	Petrol/ Electric	133	04/20->	5GF (EP6FADTXD)								
Engine: All engines	Information: Emission Standard:Euro 6.2, x 4, COIL ON PLUG									9.6375 C10		
1.6 Hybrid	Petrol/ Electric	165	04/20->	5GF (EP6FADTXD)								
Engine: All engines	Information: Emission Standard:Euro 6.2, x 4, COIL ON PLUG									9.6375 C10		
1.6 PureTech 180	Petrol	133	11/18->	5GF (EP6FADTXD)								
Engine: All engines	Information: x 4, COIL ON PLUG									9.6375 C10		
1.6 THP 150	Petrol	110	09/19->	5GX (EP6FDTMD)								
Engine: All engines	Information: x 4, COIL ON PLUG									9.6375 C10		

A10	CONDENSER	**A20**	CONTACT SET	**A40**	DISTRIBUTOR CAP	**A50**	ROTOR	**A70**	PICK-UP
C10	COIL	**C20**	IGNITION MODULE	**C30**	ELECTRONIC IGNITION KIT	**E01**	IGNITION CABLE SET		

The present application list is a brief version. For the detailed information about the possibility of installation on a specific vehicle, please refer to our web-catalogue http://catalogo.facet.eu/

CITROËN

Vehicle	alim.	kW	Date	Engine	FUNCTIONS ON THE VEHICLE A10	A20	A40	A50	A70	C10 - C30	C20	E01
1.6 THP 165	Petrol	121	05/19->	5GY (EP6FDTM)								
Engine: All engines — Information: x 4, COIL ON PLUG										9.6375 C10		
C5 I												
1.8	Petrol	85	09/04-08/05	6FZ (EW7J4)								
Engine: All engines — Information: x 4, COIL ON PLUG										9.6308 C10		
1.8 16V	Petrol	85	03/01->	6FZ (EW7J4)								
Engine: All engines — Information: x 4, COIL ON PLUG										9.6308 C10		
1.8 16V	Petrol	92	09/05->	6FY (EW7A)								
Engine: All engines — Information: x 1, COIL ON PLUG										9.6376 C10		
2.0	Petrol	103	11/04-01/08	RFJ (EW10A)								
Engine: All engines — Information: x 1, COIL ON PLUG										9.6376 C10		
2.0 16V	Petrol	100	03/01-08/04	RFN (EW10J4)								
Engine: All engines — Information: x 4, COIL ON PLUG										9.6308 C10		
2.0 16V	Petrol	103	09/04->	RFJ (EW10A)								
Engine: All engines — Information: x 1, COIL ON PLUG										9.6376 C10		
C5 II												
1.6 THP 150	Petrol	110	04/09->	5FN (EP6CDT)								
Engine: All engines — Information: x 4, COIL ON PLUG										9.6375 C10		
1.6 THP 155	Petrol	115	04/09->	5FV (EP6CDT)								
Engine: All engines — Information: x 4, COIL ON PLUG										9.6375 C10		
1.6 VTi 120	Petrol	88	07/10->	5FS (EP6C)								
Engine: All engines — Information: x 4, COIL ON PLUG										9.6375 C10		
1.8 16V	Petrol	92	02/08->	6FY (EW7A)								
Engine: All engines — Information: x 1, COIL ON PLUG										9.6376 C10		
2.0 16V	Petrol	103	02/08->	RFJ (EW10A)								
Engine: All engines — Information: x 1, COIL ON PLUG										9.6376 C10		
2.0 16V BioFlex	Petrol/ Ethanol	103	02/08->	RFJ (EW10A)								
Engine: All engines — Information: x 1, COIL ON PLUG										9.6376 C10		
C8												
2.0	Petrol	100	07/02->	RFN (EW10J4)								
Engine: All engines — Information: x 4, COIL ON PLUG										9.6308 C10		

A10	CONDENSER	A20	CONTACT SET	A40	DISTRIBUTOR CAP	A50	ROTOR	A70	PICK-UP
C10	COIL	C20	IGNITION MODULE	C30	ELECTRONIC IGNITION KIT	E01	IGNITION CABLE SET		

The present application list is a brief version. For the detailed information about the possibility of installation on a specific vehicle, please refer to our web-catalogue http://catalogo.facet.eu/

Vehicle	alim.	kW	Date	Engine	FUNCTIONS ON THE VEHICLE A10	A20	A40	A50	A70	C10 - C30	C20	E01
2.0	Petrol	103	06/04-12/11	**RFJ (EW10A)**								
All engines	x 1, COIL ON PLUG									9.6376 C10		
2.0 16V	Petrol	103	09/05->	**RFJ (EW10A)**								
All engines	x 1, COIL ON PLUG									9.6376 C10		
2.0 16V	Petrol	104	09/05->	**RFJ (EW10A)**								
All engines										9.6376 C10		
2.2	Petrol	116	07/02->	**3FZ (EW12J4)**								
All engines	x 4, COIL ON PLUG									9.6409 C10		
C-CROSSER												
2.0	Petrol	108	11/10->	**4B11**								
All engines	x 4, COIL ON PLUG									9.6397 C10		
2.0 Trazione integrale	Petrol	108	11/10->	**4B11**								
All engines	x 4, COIL ON PLUG									9.6397 C10		
2.4 16V	Petrol	125	08/08->	**SFZ (4B12 MMC)**								
All engines	x 4, COIL ON PLUG									9.6397 C10		
C-CROSSER ENTERPRISE												
2.4 16V	Petrol	125	01/09->	**4B12**								
All engines	x 4, COIL ON PLUG									9.6397 C10		
C-ELYSEE												
1.2 PureTech 82	Petrol	61	02/18->	**HMR (EB2FA)**								
All engines	x 3, COIL ON PLUG									9.6509 C10		
1.2 VTi 72	Petrol	53	11/12->	**HMY (EB2M)**								
All engines	x 3, COIL ON PLUG									9.6509 C10		
1.2 VTi 82	Petrol	60	12/14->	**177L, EB2F, HMZ (EB2F)**								
Eng. 177L, HMZ (EB2F)	x 3, COIL ON PLUG									9.6509 C10		
Eng. EB2F	Qty: 3									9.6509 C10		
CX I												
2000	Petrol	78	06/79-08/85	**829 A5**								
All engines	version Ducellier						2.7658PHT	3.7694				
2400	Petrol	85	08/76-06/80	**M23-623**								
All engines	version Ducellier				0.0334		2.7659PHT	3.7691				
2400 GTi	Petrol	94	06/77-06/83	**M23-622**								
All engines	version Ducellier						2.7659PHT	3.7683RS				

A10	CONDENSER	**A20**	CONTACT SET	**A40**	DISTRIBUTOR CAP	**A50**	ROTOR	**A70**	PICK-UP
C10	COIL	**C20**	IGNITION MODULE	**C30**	ELECTRONIC IGNITION KIT	**E01**	IGNITION CABLE SET		

The present application list is a brief version. For the detailed information about the possibility of installation on a specific vehicle, please refer to our web-catalogue http://catalogo.facet.eu/

Vehicle	alim.	kW	Date	Engine	FUNCTIONS ON THE VEHICLE: A10	A20	A40	A50	A70	C10 - C30	C20	E01
2400 GTi	Petrol	96	06/77-06/82	**M23-622**								
All engines	version Ducellier						2.7659PHT	3.7683RS				
CX II												
20 RE	Petrol	78	08/85-12/92	**829 A5**								
All engines	version Ducellier						2.7658PHT	3.7694				
All engines											9.4005	
22 TRS	Petrol	83	07/85-12/92	**J6T A500**								
All engines	version Ducellier						2.7658PHT	3.7694				
All engines											9.4005	
DS3												
1.2 THP 110	Petrol	81	10/14-07/15	**HNZ (EB2DT)**								
All engines	x 3, COIL ON PLUG									9.6520 C10		
1.2 VTi 82	Petrol	60	01/13-07/15	**177L, HMZ (EB2F)**								
All engines	x 3, COIL ON PLUG									9.6509 C10		
1.4 VTi 95	Petrol	70	04/10-07/15	**8FP (EP3C)**								
All engines	x 4, COIL ON PLUG									9.6375 C10		
1.4 VTi 95 LPG	Petrol/ Liquified Petro-leum Gas (LPG)	70	08/12-07/15	**8FR (EP3C)**								
All engines	x 4, COIL ON PLUG									9.6375 C10		
1.4 VTi 98	Petrol	72	11/09-07/15	**8FR (EP3C)**								
All engines	x 4, COIL ON PLUG									9.6375 C10		
1.6	Petrol	153	02/11-07/15	**5GM (EP6FDTX)**								
All engines	Qty: 4									9.6375 C10		
1.6 Racing	Petrol	149	02/11-07/15	**5FF (EP6DTS)**								
All engines	x 4, COIL ON PLUG									9.6375 C10		
1.6 Racing	Petrol	152	02/11-07/15	**5FD (EP6DTS)**								
All engines	x 4, COIL ON PLUG									9.6375 C10		
1.6 THP 150	Petrol	110	01/10-07/15	**5FN (EP6CDT), 5FX (EP6DT)**								
All engines	x 4, COIL ON PLUG									9.6375 C10		
1.6 THP 155	Petrol	115	04/10-07/15	**5FR (EP6DT), 5FV (EP6CDT)**								
All engines	x 4, COIL ON PLUG									9.6375 C10		

A10	CONDENSER	**A20**	CONTACT SET	**A40**	DISTRIBUTOR CAP	**A50**	ROTOR	**A70**	PICK-UP
C10	COIL	**C20**	IGNITION MODULE	**C30**	ELECTRONIC IGNITION KIT	**E01**	IGNITION CABLE SET		

The present application list is a brief version. For the detailed information about the possibility of installation on a specific vehicle, please refer to our web-catalogue http://catalogo.facet.eu/

Vehicle	alim.	kW	Date	Engine	FUNCTIONS ON THE VEHICLE							
					A10	A20	A40	A50	A70	C10 - C30	C20	E01
1.6 THP 165	Petrol	121	10/14-07/15	ENGINE: 5GZ (EP6FDT)								
Engine: All engines	Information: x 4, COIL ON PLUG									9.6375 C10		
1.6 VTi 120	Petrol	88	04/10-07/15	ENGINE: 5FS (EP6C)								
Engine: All engines	Information: x 4, COIL ON PLUG									9.6375 C10		
DS4												
1.2 THP 130	Petrol	96	07/14-07/15	ENGINE: HNY (EB2DTS)								
Engine: All engines	Information: x 3, COIL ON PLUG									9.6520 C10		
1.6 THP 150	Petrol	110	04/11-07/15	ENGINE: 5FE (EP6CDTMD)								
Engine: All engines	Information: x 4, COIL ON PLUG									9.6375 C10		
1.6 THP 155	Petrol	115	04/11-07/15	ENGINE: 5FV (EP6CDT)								
Engine: All engines	Information: x 4, COIL ON PLUG									9.6375 C10		
1.6 THP 160	Petrol	120	04/12-07/15	ENGINE: 5FM (EP6CDTM)								
Engine: All engines	Information: x 4, COIL ON PLUG									9.6375 C10		
1.6 THP 165	Petrol	121	01/12-07/15	ENGINE: 5FM (EP6CDTM), 5FM (EP6DT), 5GZ (EP6FDT)								
Engine: Eng. 5FM (EP6CDTM), 5GZ (EP6FDT)	Information: x 4, COIL ON PLUG									9.6375 C10		
Engine: Eng. 5FM (EP6DT)	Information: Qty: 4									9.6375 C10		
1.6 THP 200	Petrol	147	04/11-07/15	ENGINE: 5FU (EP6DTX)								
Engine: All engines	Information: x 4, COIL ON PLUG									9.6375 C10		
1.6 THP 210	Petrol	155	07/15-07/15	ENGINE: 5GM (EP6FDTX)								
Engine: All engines	Information: Qty: 4									9.6375 C10		
1.6 VTi 120	Petrol	88	04/11-07/15	ENGINE: 5FS (EP6C)								
Engine: All engines	Information: x 4, COIL ON PLUG									9.6375 C10		
DS5												
1.6 THP 150	Petrol	110	11/11-07/15	ENGINE: 5FE (EP6CDTMD)								
Engine: All engines	Information: x 4, COIL ON PLUG									9.6375 C10		
1.6 THP 155	Petrol	115	11/11-07/15	ENGINE: 5FV (EP6CDT)								
Engine: All engines	Information: x 4, COIL ON PLUG									9.6375 C10		
1.6 THP 165	Petrol	121	01/12-07/15	ENGINE: 5FM (EP6CDTM), 5FM (EP6DT), 5GZ (EP6FDT)								
Engine: All engines	Information: x 4, COIL ON PLUG									9.6375 C10		

A10	CONDENSER	**A20**	CONTACT SET	**A40**	DISTRIBUTOR CAP	**A50**	ROTOR	**A70**	PICK-UP
C10	COIL	**C20**	IGNITION MODULE	**C30**	ELECTRONIC IGNITION KIT	**E01**	IGNITION CABLE SET		

The present application list is a brief version. For the detailed information about the possibility of installation on a specific vehicle, please refer to our web-catalogue http://catalogo.facet.eu/

Vehicle	alim.	kW	Date	Engine	FUNCTIONS ON THE VEHICLE A10	A20	A40	A50	A70	C10 - C30	C20	E01
1.6 THP 165 Hybrid	Petrol/ Electric	121	06/12-07/15	5GZ (EP6FDT)								
Engine: All engines — Information: x 4, COIL ON PLUG										9.6375 C10		
1.6 THP 200	Petrol	147	11/11-07/15	5FU (EP6DTX)								
Engine: All engines — Information: x 4, COIL ON PLUG										9.6375 C10		
1.6 THP 210	Petrol	155	11/14-07/15	5GM (EP6FDTX)								
Engine: All engines — Information: Qty: 4										9.6375 C10		
DYANE												
4	Petrol	17	04/68-07/75	A79/1 (AYA2)								
Engine: All engines — Information: version Ducellier						1.3664						
EVASION												
1.8	Petrol	73	05/97-07/02	LFZ (XU7JP)								
Engine: All engines												4.8674
1.8	Petrol	76	02/96-12/96	LFZ (XU7JP)								
Engine: All engines — Information: x 1, D.I.S., connector type, saw teeth										9.6088 C10		
2.0	Petrol	89	06/94-07/02	RFU (XU10J2/C)								
Engine: All engines — Information: x 1, D.I.S., connector type, saw teeth										9.6088 C10		
Engine: All engines												4.8494
2.0 16V	Petrol	100	05/00-07/02	RFN (EW10J4)								
Engine: All engines — Information: x 4, COIL ON PLUG										9.6308 C10		
2.0 Turbo C.T.	Petrol	108	06/94-07/02	RGX (XU10J2TE)								
Engine: All engines — Information: x 1, D.I.S., connector type, saw teeth										9.6088 C10		
Engine: All engines												4.8494
GRAND C4 SPACETOURER												
1.6 PureTech 180	Petrol	133	04/18->	5GF (EP6FADTXD)								
Engine: All engines — Information: x 4, COIL ON PLUG										9.6375 C10		
1.6 THP 165	Petrol	110	04/18->	5GX (EP6FDTMD)								
Engine: All engines — Information: x 4, COIL ON PLUG										9.6375 C10		
1.6 THP 165	Petrol	121	04/18->	5GZ (EP6FDT)								
Engine: All engines — Information: x 4, COIL ON PLUG										9.6375 C10		
PureTech 130	Petrol	96	05/19->	HNY (EB2DTS)								
Engine: All engines — Information: x 3, COIL ON PLUG										9.6520 C10		

A10	CONDENSER	A20	CONTACT SET	A40	DISTRIBUTOR CAP	A50	ROTOR	A70	PICK-UP
C10	COIL	C20	IGNITION MODULE	C30	ELECTRONIC IGNITION KIT	E01	IGNITION CABLE SET		

The present application list is a brief version. For the detailed information about the possibility of installation on a specific vehicle, please refer to our web-catalogue http://catalogo.facet.eu/

Vehicle	alim.	kW	Date	Engine	FUNCTIONS ON THE VEHICLE							
					A10	A20	A40	A50	A70	C10 - C30	C20	E01
GS												
				ENGINE								
A 1.3	Petrol	48	07/78-07/86	G13/625								
Engine	Information											
All engines	version Ducellier						2.7658PHT	3.7694				
All engines											9.4005	
JUMPER I												
				ENGINE								
2.0	Petrol	79	02/94-02/02	XU102C								
Engine	Information											
All engines	version Ducellier						2.7674PHT	3.7702RS	8.3619			
All engines	Kit, version Ducellier						2.7687					
				ENGINE								
2.0	Petrol	80	02/94-04/02	RFW (XU10J2U)								
Engine	Information											
All engines										9.6088 C10		4.8674
				ENGINE								
2.0 4x4	Petrol	80	08/96-04/02	RFW (XU10J2U)								
Engine	Information											
All engines										9.6088 C10		4.8674
JUMPER II												
				ENGINE								
2.0	Petrol	81	04/02->	XU10J2								
Engine	Information											
All engines	x 1, D.I.S., connector type, saw teeth									9.6088 C10		
All engines												4.8674
				ENGINE								
2.0 bivalent	Petrol/ Com-pressed Natural Gas (CNG)	81	02/03->	XU10J2								
Engine	Information											
All engines	x 1, D.I.S., connector type, saw teeth									9.6088 C10		
All engines												4.8674
JUMPY I												
				ENGINE								
1.6	Petrol	58	10/95-08/00	1580 SPI, 220 A2.000								
Engine	Information											
All engines	x 1, D.I.S., connector type, saw teeth									9.6068 C10		
All engines												4.8655
				ENGINE								
1.6	Petrol	59	10/95-08/00	220 A2.000								
Engine	Information											
All engines										9.6068 C10		4.8655
				ENGINE								
1.6 i	Petrol	58	10/95-08/00	1580 SPI, 220 A2.000								
Engine	Information											
All engines	x 1, D.I.S., connector type, saw teeth									9.6068 C10		
All engines												4.8655
				ENGINE								
2.0	Petrol	100	04/00-12/06	RFN (EW10J4)								
Engine	Information											
All engines										9.6308 C10		
All engines	x 4, COIL ON PLUG									9.6308 C10		
				ENGINE								
2.0 i 16V	Petrol	102	03/00-10/06	RFN (EW10J4)								
Engine	Information											
All engines	x 4, COIL ON PLUG									9.6308 C10		

A10	CONDENSER	A20	CONTACT SET	A40	DISTRIBUTOR CAP	A50	ROTOR	A70	PICK-UP
C10	COIL	C20	IGNITION MODULE	C30	ELECTRONIC IGNITION KIT	E01	IGNITION CABLE SET		

The present application list is a brief version. For the detailed information about the possibility of installation on a specific vehicle, please refer to our web-catalogue http://catalogo.facet.eu/

Vehicle	alim.	kW	Date	Engine	FUNCTIONS ON THE VEHICLE: A10	A20	A40	A50	A70	C10 - C30	C20	E01
JUMPY II												
				ENGINE								
2.0 i	Petrol	103	01/07-03/16	RFH (EW10A), RFJ (EW10A)								
All engines				x 1, COIL ON PLUG						9.6376 C10		
LNA												
				ENGINE								
1.1	Petrol	37	07/82-04/85	109/5E								
All engines				version Bosch			2.7524PHT	3.7556RS				
All engines				version Ducellier			2.7658PHT	3.7694				
All engines											9.4005	
MEHARI												
				ENGINE								
0.6	Petrol	19	05/68-10/79	M28/1 (AK2)								
All engines				version Ducellier		1.3664						
NEMO												
				ENGINE								
1.4	Petrol	54	02/08->	KFT (TU3A), KFV (TU3A)								
All engines				x 4, COIL ON PLUG						9.6305 C10		
SAXO												
				ENGINE								
1.0	Petrol	33	10/97-06/03	CDZ (TU9M)								
All engines				x 1, D.I.S., connector type, saw teeth						9.6088 C10		
				ENGINE								
1.0	Petrol	37	08/99-06/03	CDZ (TU9M)								
All engines				x 1, D.I.S., connector type, saw teeth						9.6088 C10		
				ENGINE								
1.0 X	Petrol	33	05/96-11/98	CDY (TU9M), CDZ (TU9M)								
Eng. CDY (TU9M)				x 1, D.I.S., connector type, saw teeth						9.6088 C10		
Eng. CDZ (TU9M)												4.9374
				ENGINE								
1.0 X	Petrol	37	05/98-06/03	CDZ (TU9M)								
All engines				x 1, D.I.S., connector type, saw teeth						9.6088 C10		
All engines												4.9374
				ENGINE								
1.1 BiFuel	Petrol/ Liquified Petro-leum Gas (LPG)	44	07/00-06/03	HDZ (TU1M)								
All engines				x 1, D.I.S., connector type, saw teeth						9.6088 C10		
				ENGINE								
1.1 X, SX	Petrol	40	05/96-09/03	HDZ (TU1M)								
All engines				x 1, D.I.S., connector type, saw teeth						9.6088 C10		
All engines												4.9374
				ENGINE								
1.1 X, SX	Petrol	44	05/96-09/03	HDZ (TU1M), HFX (TU1JP)								
Eng. HDZ (TU1M)										9.6088 C10		4.9374
Eng. HFX (TU1JP)										9.6305 C10		

A10	CONDENSER	A20	CONTACT SET	A40	DISTRIBUTOR CAP	A50	ROTOR	A70	PICK-UP
C10	COIL	C20	IGNITION MODULE	C30	ELECTRONIC IGNITION KIT	E01	IGNITION CABLE SET		

The present application list is a brief version. For the detailed information about the possibility of installation on a specific vehicle, please refer to our web-catalogue http://catalogo.facet.eu/

Vehicle	alim.	kW	Date	Engine	FUNCTIONS ON THE VEHICLE A10	A20	A40	A50	A70	C10 - C30	C20	E01
1.4 VTS	Petrol	55	05/96-06/03	**KFW (TU3JP), KFX (TU3JP)**								
All engines				->year 01/01/98, NOT FOR: (USA), x 1, D.I.S., connector type, saw teeth						9.6088 C10		
All engines				01/02/98 ->, NOT FOR: (USA), x 4, Electricfil, COIL ON PLUG						9.6303 C10		
All engines				FOR: (USA), x 1, COIL ON PLUG						9.6305 C10		
Eng. KFX (TU3JP)				+manual transmission, ->year 04/01/98, +automatic transmission								4.9374
1.6	Petrol	66	02/96-06/03	**NFZ (TU5JP)**								
All engines				->year 01/06/98, x 1, D.I.S., connector type, saw teeth						9.6088 C10		
All engines				01/07/98 ->, x 4, Electricfil, COIL ON PLUG						9.6303 C10		
All engines				+manual transmission, ->year 31/05/98, +automatic transmission								4.9374
1.6	Petrol	74	02/01-04/04	**NFT (TU5JP)**								
All engines				+automatic transmission						9.6088 C10		4.9374
All engines				x 1, COIL ON PLUG						9.6305 C10		
1.6 VTL, VTR	Petrol	65	05/96-06/03	**NFZ (TU5JP)**								
All engines				->year 01/06/98, x 1, D.I.S., connector type, saw teeth						9.6088 C10		
All engines				01/07/98 ->, x 4, Electricfil, COIL ON PLUG						9.6303 C10		
All engines				+manual transmission, ->year 31/05/98, +automatic transmission								4.9374
1.6 VTS	Petrol	72	09/00-09/03	**NFT (TU5JP)**								
All engines				+automatic transmission						9.6088 C10		4.9374
All engines				x 1, COIL ON PLUG						9.6305 C10		
VISA												
11 E	Petrol	35	09/78-06/88	**109K**								
All engines				version Bosch			2.7524PHT	3.7556RS				
All engines				version Ducellier			2.7658PHT	3.7694				
All engines											9.4005	
XANTIA I												
1.6 i	Petrol	65	03/93-03/01	**BFZ (XU5JP)**								
All engines										9.6088 C10		4.8674
1.8 i	Petrol	66	04/97-04/03	**LFX (XU7JB)**								
All engines										9.6088 C10		4.8674
1.8 i	Petrol	74	03/93-01/98	**LFZ (XU7JP)**								
All engines										9.6088 C10		4.8674
2.0	Petrol	95	03/93-05/95	**RFX XU10J2C/Z L3**								
All engines										9.6088 C10		4.8494
2.0 i	Petrol	89	03/93-04/03	**RFX (XU10J2C)**								
All engines										9.6088 C10		4.8494

A10	CONDENSER	**A20**	CONTACT SET	**A40**	DISTRIBUTOR CAP	**A50**	ROTOR	**A70**	PICK-UP
C10	COIL	**C20**	IGNITION MODULE	**C30**	ELECTRONIC IGNITION KIT	**E01**	IGNITION CABLE SET		

The present application list is a brief version. For the detailed information about the possibility of installation on a specific vehicle, please refer to our web-catalogue http://catalogo.facet.eu/

Vehicle	alim.	kW	Date	Engine	FUNCTIONS ON THE VEHICLE A10	A20	A40	A50	A70	C10 - C30	C20	E01
2.0 Turbo	Petrol	108	06/95-04/03	**RGX (XU10J2TE)**								
All engines										9.6088 C10		4.8494

XANTIA II

1.6 i SX	Petrol	65	01/98-03/01	**BFZ (XU5JP)**								
All engines										9.6088 C10		4.8674
1.8 i	Petrol	66	01/98-04/03	**LFX (XU7JB)**								
All engines										9.6088 C10		4.8674
2.0 i	Petrol	89	01/98-04/03	**RFX (XU10J2C)**								
All engines										9.6088 C10		4.8494
2.0 Turbo	Petrol	108	01/98-04/03	**RGX (XU10J2TE)**								
All engines										9.6088 C10		4.8494

XM I

2.0	Petrol	84	05/89-04/94	--								
All engines	version Ducellier						2.7674PHT	3.7702RS	8.3619				
All engines	Kit, version Ducellier						2.7687						
2.0 i	Petrol	79	05/89-04/94	**RDZ (XU10MZ)**								
All engines	->year 04/06/90, version Ducellier						2.7674PHT						
All engines	->year 04/06/90, Kit, version Ducellier						2.7687						
All engines	->year 02/05/90, version Ducellier							3.7702RS					
All engines	->year 04/06/90									9.6055 C10		9.4005	
All engines	05/06/90 ->									9.6088 C10		4.8494	
2.0 i	Petrol	89	05/89-06/94	**RFZ (XU10J2)**								
All engines	version Ducellier, +manual transmission, ->year 14/05/90, +automatic transmission						2.7674PHT	3.7702RS	8.3619				
All engines	Kit, version Ducellier, +manual transmission, ->year 14/05/90, +automatic transmission						2.7687						
All engines	+manual transmission, ->year 14/05/90, +automatic transmission									9.6055 C10			
All engines	+manual transmission, 15/05/90 ->									9.6088 C10		4.8494	
2.0 i Turbo	Petrol	104	09/92-06/94	**RGY (XU10J2TE/Z)**								
All engines										9.6088 C10		4.8494	
2.0 Turbo	Petrol	104	09/92-04/94	**RGY (XU10J2TE/Z)**								
All engines										9.6088 C10		4.8494	
3.0	Petrol	123	05/89-05/94	**UFZ (ZPJ/Z)**								
All engines	version Bosch						2.7530/22PHT	3.7573/19RS					
All engines											9.4034		
3.0 V6	Petrol	123	05/89-06/94	**SFZ (ZPJ/Z), UFZ (ZPJ/Z)**								
All engines	version Bosch						2.7530/22PHT	3.7573/19RS					
All engines											9.4034		

A10	CONDENSER	**A20**	CONTACT SET	**A40**	DISTRIBUTOR CAP	**A50**	ROTOR	**A70**	PICK-UP
C10	COIL	**C20**	IGNITION MODULE	**C30**	ELECTRONIC IGNITION KIT	**E01**	IGNITION CABLE SET		

The present application list is a brief version. For the detailed information about the possibility of installation on a specific vehicle, please refer to our web-catalogue http://catalogo.facet.eu/

Vehicle	alim.	kW	Date	Engine	FUNCTIONS ON THE VEHICLE A10	A20	A40	A50	A70	C10 - C30	C20	E01
3.0 V6 24V	Petrol	147	07/90-06/94	SKZ (ZPJ4/Z), UKZ (ZPJ4/Z)								

Engine	Information	A10	A20	A40	A50	A70	C10 - C30	C20	E01
All engines	version Bosch			2.7530/22PHT	3.7573/19RS				
All engines								9.4034	

XM II

2.0	Petrol	89	08/94-07/99	XU10J2

Engine	Information	A10	A20	A40	A50	A70	C10 - C30	C20	E01
All engines							9.6088 C10		4.8494

2.0 Turbo	Petrol	108	05/94-10/00	RGX (XU10J2TE), RGY (XU10J2TE/Z)

Engine	Information	A10	A20	A40	A50	A70	C10 - C30	C20	E01
All engines							9.6088 C10		4.8494

3.0 V6	Petrol	123	05/94-10/00	SFZ (ZPJ/Z), UFZ (ZPJ/Z)

Engine	Information	A10	A20	A40	A50	A70	C10 - C30	C20	E01
All engines	version Bosch			2.7530/22PHT	3.7573/19RS				
All engines								9.4034	

3.0 V6 24V	Petrol	147	05/94-10/00	SKZ (ZPJ4/Z), UKZ (ZPJ4/Z)

Engine	Information	A10	A20	A40	A50	A70	C10 - C30	C20	E01
All engines	version Bosch			2.7530/22PHT	3.7573/19RS				
All engines								9.4034	

XSARA

1.4	Petrol	55	05/98-03/05	KFX (TU3JP)

Engine	Information	A10	A20	A40	A50	A70	C10 - C30	C20	E01
All engines	->year 01/08/00, euro2/euro3, x 4, Electricfil, COIL ON PLUG						9.6303 C10		
All engines	01/09/00 ->, x 1, COIL ON PLUG, euro 3, x 1, COIL ON PLUG						9.6305 C10		

1.4 i	Petrol	55	04/97-08/05	KFW (TU3JP), KFX (TU3JP)

Engine	Information	A10	A20	A40	A50	A70	C10 - C30	C20	E01
Eng. KFX (TU3JP)	->year 31/05/98						9.6088 C10		4.9374
All engines	->year 01/05/98, ->org. 07874, euro 2, x 1, D.I.S., connector type, saw teeth						9.6088 C10		
All engines	->year 01/08/00, 01/06/98 ->, ->year 01/08/00, euro2/euro3, org. 07875 ->, x 4, Electricfil, euro2/euro3, COIL ON PLUG, x 4, Electricfil, COIL ON PLUG						9.6303 C10		
All engines	01/09/00 ->, euro 3, x 1, COIL ON PLUG						9.6305 C10		

1.4 LPG	Petrol/ Liquified Petro-leum Gas (LPG)	55	05/98-08/00	KFW (TU3JP), KFX (TU3JP)

Engine	Information	A10	A20	A40	A50	A70	C10 - C30	C20	E01
Eng. KFW (TU3JP)	->year 01/05/98, ->org. 07874, euro 2, x 1, D.I.S., connector type, saw teeth						9.6088 C10		
All engines	01/06/98 ->, euro2/euro3, x 4, Electricfil, org. 07875 ->, x 4, COIL ON PLUG, Electricfil, euro2/euro3, COIL ON PLUG, x 4, Electricfil, COIL ON PLUG						9.6303 C10		

1.6 16V	Petrol	80	09/00-08/05	NFU (TU5JP4)

Engine	Information	A10	A20	A40	A50	A70	C10 - C30	C20	E01
All engines	x 1, COIL ON PLUG						9.6307 C10		

1.6 i	Petrol	65	04/97-09/00	NFZ (TU5JP)

Engine	Information	A10	A20	A40	A50	A70	C10 - C30	C20	E01
All engines	->year 31/05/98						9.6088 C10		4.9374
All engines	->year 01/05/98, ->org. 07874, x 1, D.I.S., connector type, saw teeth						9.6088 C10		
All engines	01/06/98 ->, x 4, Electricfil, org. 07875 ->, COIL ON PLUG, x 4, Electricfil, COIL ON PLUG						9.6303 C10		

A10	CONDENSER	A20	CONTACT SET	A40	DISTRIBUTOR CAP	A50	ROTOR	A70	PICK-UP
C10	COIL	C20	IGNITION MODULE	C30	ELECTRONIC IGNITION KIT	E01	IGNITION CABLE SET		

The present application list is a brief version. For the detailed information about the possibility of installation on a specific vehicle, please refer to our web-catalogue http://catalogo.facet.eu/

Vehicle	alim.	kW	Date	Engine	FUNCTIONS ON THE VEHICLE A10	A20	A40	A50	A70	C10 - C30	C20	E01
1.8 i	Petrol	66	04/97-09/00	LFX (XU7JB)								
Engine: All engines	Information: x 1, D.I.S., connector type, saw teeth									9.6088 C10		
Engine: All engines	Information:											4.8674
1.8 i	Petrol	74	02/98-09/00	LFZ (XU7JP)								
Engine: All engines	Information: x 1, D.I.S., connector type, saw teeth									9.6088 C10		
Engine: All engines	Information:											4.8674
1.8 i Aut.	Petrol	74	04/97-09/00	LFZ (XU7JP)								
Engine: All engines	Information: x 1, D.I.S., connector type, saw teeth									9.6088 C10		
Engine: All engines	Information:											4.8674
2.0 16V	Petrol	100	09/00-08/05	RFN (EW10J4)								
Engine: All engines	Information: x 4, COIL ON PLUG									9.6308 C10		
XSARA PICASSO												
1.6	Petrol	65	12/99-09/01	NFZ (TU5JP)								
Engine: All engines	Information: x 4, Electricfil, COIL ON PLUG									9.6303 C10		
1.6	Petrol	67	06/02-08/05	NFZ (TU5JP)								
Engine: All engines	Information: x 4, Electricfil, COIL ON PLUG									9.6303 C10		
1.6	Petrol	70	12/99-12/10	NFV (TU5JP)								
Engine: All engines	Information: x 1, COIL ON PLUG									9.6305 C10		
1.6 16V	Petrol	80	03/05->	N6A (TU5JP4), NFU (TU5JP4)								
Engine: Eng. N6A (TU5JP4)	Information:									9.6307 C10		
Engine: Eng. NFU (TU5JP4)	Information: x 1, COIL ON PLUG									9.6307 C10		
1.6 16V	Petrol	81	06/05-09/06	NFU (TU5JP4)								
Engine: All engines	Information: x 1, COIL ON PLUG									9.6307 C10		
1.6 Chrono	Petrol	74	04/01-10/04	NFV (TU5JP)								
Engine: All engines	Information: x 1, COIL ON PLUG									9.6305 C10		
1.8 16V	Petrol	85	02/00-08/05	6FZ (EW7J4)								
Engine: All engines	Information: x 4, COIL ON PLUG									9.6308 C10		
2.0	Petrol	88	02/04-10/04	RFN (EW10J4)								
Engine: All engines	Information: x 1, COIL ON PLUG									9.6308 C10		
2.0 16V	Petrol	100	01/03-06/12	RFN (EW10J4)								
Engine: All engines	Information: x 4, COIL ON PLUG									9.6308 C10		

A10	CONDENSER	A20	CONTACT SET	A40	DISTRIBUTOR CAP	A50	ROTOR	A70	PICK-UP
C10	COIL	C20	IGNITION MODULE	C30	ELECTRONIC IGNITION KIT	E01	IGNITION CABLE SET		

The present application list is a brief version. For the detailed information about the possibility of installation on a specific vehicle, please refer to our web-catalogue http://catalogo.facet.eu/

Vehicle	alim.	kW	Date	Engine	FUNCTIONS ON THE VEHICLE A10	A20	A40	A50	A70	C10 - C30	C20	E01
2.0 16V	Petrol	101	12/99-11/11	RFN (EW10J4)						9.6308 C10		
All engines				x 1, COIL ON PLUG								
ZX												
1.1	Petrol	40	03/91-08/93	H1A, H1B								
All engines				version Bosch			2.7530/11PHT	3.7556RS				
All engines				version Ducellier			2.7674PHT	3.7702RS	8.3619			
All engines				Kit, version Ducellier			2.7687					
All engines				version Magneti Marelli				3.8260				
All engines										9.6055 C10		4.9376
1.1	Petrol	44	03/91-06/97	HDZ (TU1M)								
All engines				version Bosch, ->year 14/04/94			2.7530/11PHT	3.7556RS				
All engines				version Ducellier, ->year 14/04/94			2.7674PHT	3.7702RS	8.3619			
All engines				Kit, version Ducellier, ->year 14/04/94			2.7687					
All engines				->year 14/04/94						9.6055 C10		4.9376
All engines				15/04/94 ->						9.6089 C10		4.9374
1.4	Petrol	55	03/91-06/97	KDZ (TU3M/Z)								
All engines										9.6089 C10		4.9374
1.4 i	Petrol	55	03/91-10/97	KDX (TU3M/Z), KDY (TU3M), KDZ (TU3M/Z), KFX (TU3JP), TU32								
Eng. KDY (TU3M), TU32				version Bosch			2.7530/11PHT	3.7556RS				
Eng. KDY (TU3M), TU32				version Ducellier			2.7674PHT	3.7702RS	8.3619			
Eng. KDY (TU3M), TU32				Kit, version Ducellier			2.7687					
Eng. KDY (TU3M), TU32										9.6055 C10		4.9376
Eng. KFX (TU3JP)										9.6088 C10		
Eng. KDX (TU3M/Z), KDZ (TU3M/Z)										9.6089 C10		
Eng. KDX (TU3M/Z), KDZ (TU3M/Z), KFX (TU3JP)												4.9374
1.6	Petrol	66	07/94-10/97	BDY (XU5M), BFZ (XU5JP)								
All engines										9.6088 C10		4.8674
1.6 i	Petrol	65	03/91-10/97	BDY (XU5M), BFZ (XU5JP)								
All engines										9.6088 C10		4.8674
1.8	Petrol	76	03/91-10/97	LFZ (XU7JP)								
All engines										9.6088 C10		4.8674
1.8 i	Petrol	74	07/92-10/97	LFZ (XU7JP)								
All engines										9.6088 C10		4.8674
1.9	Petrol	93	03/91-06/97	D6E (XU9JA)								
All engines				version Ducellier, version Export			2.7674PHT	3.7702RS				
All engines				Kit, version Export, version Ducellier			2.7687					
All engines				version Export						9.6055 C10	9.4005	4.8491
All engines										9.6088 C10		4.8674

A10	CONDENSER	**A20**	CONTACT SET	**A40**	DISTRIBUTOR CAP	**A50**	ROTOR	**A70**	PICK-UP
C10	COIL	**C20**	IGNITION MODULE	**C30**	ELECTRONIC IGNITION KIT	**E01**	IGNITION CABLE SET		

The present application list is a brief version. For the detailed information about the possibility of installation on a specific vehicle, please refer to our web-catalogue http://catalogo.facet.eu/

Vehicle	alim.	kW	Date	Engine	FUNCTIONS ON THE VEHICLE							
					A10	A20	A40	A50	A70	C10 - C30	C20	E01
				ENGINE								
1.9	Petrol	96	03/91-09/93	D6E (XU9JA)								

Engine	Information	A10	A20	A40	A50	A70	C10 - C30		C20	E01
All engines	version Ducellier, version Export			2.7674PHT	3.7702RS					
All engines	Kit, version Export, version Ducellier			2.7687						
All engines	version Export						9.6055	C10	9.4005	4.8491
All engines							9.6088	C10		4.8674

				ENGINE								
1.9 i	Petrol	88	03/91-06/97	DKZ (XU9JA)								

Engine	Information	A10	A20	A40	A50	A70	C10 - C30		C20	E01
All engines	version Ducellier, version Export			2.7674PHT	3.7702RS					
All engines	Kit, version Export, version Ducellier			2.7687						
All engines	version Export						9.6055	C10	9.4005	4.8491
All engines							9.6088	C10		4.8674

				ENGINE								
2.0	Petrol	90	07/94-10/97	RFX (XU10J2C)								

Engine	Information	A10	A20	A40	A50	A70	C10 - C30		C20	E01
All engines							9.6088	C10		4.8494

				ENGINE								
2.0 i	Petrol	89	07/92-06/97	RFX (XU10J2C)								

Engine	Information	A10	A20	A40	A50	A70	C10 - C30		C20	E01
All engines							9.6088	C10		4.8494

				ENGINE								
2.0 i	Petrol	90	07/94-10/97	XU10J2								

Engine	Information	A10	A20	A40	A50	A70	C10 - C30		C20	E01
All engines							9.6088	C10		4.8494

A10	CONDENSER	A20	CONTACT SET	A40	DISTRIBUTOR CAP	A50	ROTOR	A70	PICK-UP
C10	COIL	C20	IGNITION MODULE	C30	ELECTRONIC IGNITION KIT	E01	IGNITION CABLE SET		

The present application list is a brief version. For the detailed information about the possibility of installation on a specific vehicle, please refer to our web-catalogue http://catalogo.facet.eu/

Vehicle	alim.	kW	Date	Engine	FUNCTIONS ON THE VEHICLE							
					A10	A20	A40	A50	A70	C10 - C30	C20	E01
FORMENTOR												
1.4 e-Hybrid	Petrol/ Electric	110	01/21->	ENGINE: DGEA								
Engine: All engines	Information: x 4, ELDOR, COIL ON PLUG, incl. spark plug connector, Number of pins:4, incl. spark plug connector									9.6499 C10		
1.4 e-Hybrid	Petrol/ Electric	150	01/21->	ENGINE: DGEA								
Engine: All engines	Information: x 4, ELDOR, COIL ON PLUG, incl. spark plug connector, Number of pins:4, incl. spark plug connector									9.6499 C10		
2.0 TSI	Petrol	180	03/21->	ENGINE: DNPA								
Engine: All engines	Information: x 4, HITACHI, COIL ON PLUG, incl. spark plug connector									9.6536 C10		
2.0 TSI 4Drive	Petrol	140	08/20->	ENGINE: DNNA								
Engine: All engines	Information: x 4, HITACHI, COIL ON PLUG, incl. spark plug connector									9.6536 C10		
2.0 TSI 4Drive	Petrol	228	07/20->	ENGINE: DNFB								
Engine: All engines	Information: x 4, HITACHI, COIL ON PLUG, incl. spark plug connector									9.6536 C10		
VZ 1.4 e-Hybrid	Petrol/ Electric	180	02/21->	ENGINE: DGEA								
Engine: All engines	Information: x 4, ELDOR, COIL ON PLUG, incl. spark plug connector, Number of pins:4, incl. spark plug connector									9.6499 C10		
LEON												
1.4 e-HYBRID	Petrol/ Electric	110	09/20->	ENGINE: DGEA								
Engine: All engines	Information: x 4, ELDOR, COIL ON PLUG, Number of pins:4, incl. spark plug connector									9.6499 C10		
1.4 e-HYBRID	Petrol/ Electric	150	09/20->	ENGINE: DGEA								
Engine: All engines	Information: x 4, ELDOR, COIL ON PLUG, Number of pins:4, incl. spark plug connector									9.6499 C10		
2.0 TSI	Petrol	221	06/21->	ENGINE: DNFC								
Engine: All engines	Information: x 4, HITACHI, COIL ON PLUG, incl. spark plug connector									9.6536 C10		
2.0 TSI 4Drive	Petrol	228	06/21->	ENGINE: DNFB								
Engine: All engines	Information: x 4, HITACHI, COIL ON PLUG, incl. spark plug connector									9.6536 C10		
VZ 1.4 e-HYBRID	Petrol/ Electric	180	09/20->	ENGINE: DGEA								
Engine: All engines	Information: x 4, ELDOR, COIL ON PLUG, Number of pins:4, incl. spark plug connector									9.6499 C10		

A10	CONDENSER	**A20**	CONTACT SET	**A40**	DISTRIBUTOR CAP	**A50**	ROTOR	**A70**	PICK-UP
C10	COIL	**C20**	IGNITION MODULE	**C30**	ELECTRONIC IGNITION KIT	**E01**	IGNITION CABLE SET		

The present application list is a brief version. For the detailed information about the possibility of installation on a specific vehicle, please refer to our web-catalogue http://catalogo.facet.eu/

Vehicle	alim.	kW	Date	Engine	FUNCTIONS ON THE VEHICLE							
					A10	A20	A40	A50	A70	C10 - C30	C20	E01
1210												
				ENGINE								
1.2	Petrol	36	01/69->	--								
Engine	Information											
All engines	version Ducellier				0.0323	1.3655		3.7691				
All engines	->year 31/12/79, version Ducellier						2.7649PHT					
All engines										9.6001D C10		
1310												
				ENGINE								
1.3	Petrol	40	05/83-07/04	810-02/-99								
Engine	Information											
All engines	version Ducellier				0.0323	1.3655	2.7649PHT	3.7691				
All engines										9.6001D C10		
1410												
				ENGINE								
1.4	Petrol	43	01/69->	--								
Engine	Information											
All engines	version Ducellier				0.0323	1.3655		3.7691				
All engines	->year 31/12/79, version Ducellier						2.7649PHT					
All engines	01/01/80 ->, version Ducellier						2.7654PHT					
All engines										9.6001D C10		
ARO												
				ENGINE								
10	Petrol	0	01/72-12/80	--								
Engine	Information											
All engines	version Ducellier				0.0323	1.3691/1	2.7649PHT	3.7691				
All engines												4.8511
DOKKER												
				ENGINE								
1.2 TCe	Petrol	0	11/12->	H5F 408								
Engine	Information											
All engines	Qty: 4									9.6513 C10		
				ENGINE								
1.2 TCe	Petrol	85	11/12->	H5F 402, H5F 408								
Engine	Information											
All engines	x 4, COIL ON PLUG									9.6513 C10		
				ENGINE								
1.2 TCe 115	Petrol	84	12/12->	H5F 402								
Engine	Information											
All engines	x 4, COIL ON PLUG									9.6513 C10		
				ENGINE								
1.2 TCe 115	Petrol	85	07/15->	--, H5F 408								
Engine	Information											
Eng. --	Qty: 4									9.6513 C10		
Eng. H5F 408	x 4, COIL ON PLUG									9.6513 C10		
				ENGINE								
1.6	Petrol	0	11/12->	H4M 738, H4M 740								
Engine	Information											
All engines	Qty: 4									9.6513 C10		
				ENGINE								
1.6	Petrol	61	11/12->	K7M 812, K7M 828								
Engine	Information											
All engines	x 1, D.I.S.									9.6496 C10		
All engines												4.7252
				ENGINE								
1.6	Petrol	75	04/15->	H4M 738								
Engine	Information											
All engines	x 4, COIL ON PLUG									9.6513 C10		

A10	CONDENSER	A20	CONTACT SET	A40	DISTRIBUTOR CAP	A50	ROTOR	A70	PICK-UP
C10	COIL	C20	IGNITION MODULE	C30	ELECTRONIC IGNITION KIT	E01	IGNITION CABLE SET		

The present application list is a brief version. For the detailed information about the possibility of installation on a specific vehicle, please refer to our web-catalogue http://catalogo.facet.eu/

Vehicle	alim.	kW	Date	Engine	FUNCTIONS ON THE VEHICLE A10	A20	A40	A50	A70	C10 - C30	C20	E01
1.6 LPG	Petrol/ Liquified Petro-leum Gas (LPG)	61	11/13->	ENGINE K7M 812, K7M 828								
Engine	Information	A10	A20	A40	A50	A70	C10 - C30		C20	E01		
All engines	x 1, D.I.S.						9.6496	C10				
All engines										4.7252		
1.6 LPG	Petrol/ Liquified Petro-leum Gas (LPG)	75	04/15->	ENGINE H4M 740								
Engine	Information	A10	A20	A40	A50	A70	C10 - C30		C20	E01		
All engines	x 4, COIL ON PLUG						9.6513	C10				
1.6 LPG	Petrol/ Liquified Petro-leum Gas (LPG)	80	08/18->	ENGINE H4M 740								
Engine	Information	A10	A20	A40	A50	A70	C10 - C30		C20	E01		
All engines	x 4, COIL ON PLUG						9.6513	C10				
DUSTER												
1.0 LPG	Petrol/ Liquified Petro-leum Gas (LPG)	74	01/19->	ENGINE H4D 450, H4D 460								
Engine	Information	A10	A20	A40	A50	A70	C10 - C30		C20	E01		
All engines	x 3, COIL ON PLUG						9.6452	C10				
1.0 TCe 100	Petrol	74	01/19->	ENGINE H4D 450, H4D 460								
Engine	Information	A10	A20	A40	A50	A70	C10 - C30		C20	E01		
All engines	x 3, COIL ON PLUG						9.6452	C10				
1.0 TCe 100 4x4	Petrol	74	01/19->	ENGINE H4D 450, H4D 460								
Engine	Information	A10	A20	A40	A50	A70	C10 - C30		C20	E01		
All engines	x 3, COIL ON PLUG						9.6452	C10				
1.0 TCe 90	Petrol	67	05/21->	ENGINE H4D470								
Engine	Information	A10	A20	A40	A50	A70	C10 - C30		C20	E01		
All engines	x 3, COIL ON PLUG						9.6452	C10				
1.2 TCe 125	Petrol	0	01/12->	ENGINE H5F 408								
Engine	Information	A10	A20	A40	A50	A70	C10 - C30		C20	E01		
All engines	Qty: 4						9.6513	C10				
1.2 TCe 125	Petrol	92	10/13->	ENGINE H5F 404, H5F 408								
Engine	Information	A10	A20	A40	A50	A70	C10 - C30		C20	E01		
All engines	x 4, COIL ON PLUG						9.6513	C10				
1.2 TCe 125 4x4	Petrol	92	10/13->	ENGINE H5F 404, H5F 410								
Engine	Information	A10	A20	A40	A50	A70	C10 - C30		C20	E01		
All engines	x 4, COIL ON PLUG						9.6513	C10				
1.6	Petrol	0	04/10->	ENGINE K4M 642, K4M 646, K4M 694, K4M 842, K4M 884								
Engine	Information	A10	A20	A40	A50	A70	C10 - C30		C20	E01		
All engines	Qty: 4						9.6332	C10				
1.6 16V	Petrol	0	04/10->	ENGINE K4M 490								
Engine	Information	A10	A20	A40	A50	A70	C10 - C30		C20	E01		
All engines	Qty: 4						9.6332	C10				

A10	CONDENSER	A20	CONTACT SET	A40	DISTRIBUTOR CAP	A50	ROTOR	A70	PICK-UP
C10	COIL	C20	IGNITION MODULE	C30	ELECTRONIC IGNITION KIT	E01	IGNITION CABLE SET		

The present application list is a brief version. For the detailed information about the possibility of installation on a specific vehicle, please refer to our web-catalogue http://catalogo.facet.eu/

Vehicle	alim.	kW	Date	Engine	FUNCTIONS ON THE VEHICLE: A10	A20	A40	A50	A70	C10 - C30	C20	E01
1.6 16V	Petrol	77	04/10->	ENGINE: K4M 606, K4M 616, K4M 694, K4M 696, K4M 842, K4M 896								

Engine	Information	A10	A20	A40	A50	A70	C10 - C30		C20	E01
Eng. K4M 606, K4M 694, K4M 696, K4M 842, K4M 896	HSA8/HSMA/HSAP/HSAN, x 4, SAGEM, COIL ON PLUG						9.6332	C10		
Eng. K4M 616	Qty: 4						9.6332	C10		

1.6 16V 4x4	Petrol	77	06/10->	ENGINE: K4M 490, K4M 606, K4M 646, K4M 690								

Engine	Information	A10	A20	A40	A50	A70	C10 - C30		C20	E01
All engines	x 4, SAGEM, COIL ON PLUG, HSA5/HSA8/HSA9, x 4, SAGEM, COIL ON PLUG						9.6332	C10		

1.6 16V Hi-Flex	Petrol/ Ethanol	77	08/10->	ENGINE: K4M 696								

Engine	Information	A10	A20	A40	A50	A70	C10 - C30		C20	E01
All engines	x 4, SAGEM, COIL ON PLUG						9.6332	C10		

1.6 16V LPG	Petrol/ Liquified Petro-leum Gas (LPG)	77	04/11-01/18	ENGINE: K4M 616, K4M 642, K4M 696								

Engine	Information	A10	A20	A40	A50	A70	C10 - C30		C20	E01
Eng. K4M 616, K4M 642	x 4, SAGEM, COIL ON PLUG						9.6332	C10		
Eng. K4M 696	Qty: 4						9.6332	C10		

1.6 SCe 115	Petrol	84	06/15->	ENGINE: H4M 438, H4M 738								

Engine	Information	A10	A20	A40	A50	A70	C10 - C30		C20	E01
Eng. H4M 438	Qty: 4						9.6513	C10		
Eng. H4M 738	x 4, COIL ON PLUG						9.6513	C10		

1.6 SCe 115 4x4	Petrol	84	06/15->	ENGINE: H4M 430, H4M 730, H4M 738								

Engine	Information	A10	A20	A40	A50	A70	C10 - C30		C20	E01
Eng. H4M 430	Qty: 4						9.6513	C10		
Eng. H4M 730, H4M 738	x 4, COIL ON PLUG						9.6513	C10		

1.6 SCe 115 LPG	Petrol/ Ethanol	84	06/15-01/18	ENGINE: H4M 740								

Engine	Information	A10	A20	A40	A50	A70	C10 - C30		C20	E01
All engines	x 4, COIL ON PLUG						9.6513	C10		

1.6 SCe 115 LPG	Petrol/ Liquified Petro-leum Gas (LPG)	80	10/17->	ENGINE: H4M 740								

Engine	Information	A10	A20	A40	A50	A70	C10 - C30		C20	E01
All engines	x 4, COIL ON PLUG						9.6513	C10		

2.0	Petrol	0	04/10->	ENGINE: F4R 400, F4R 401, F4R 403, F4R 404, F4R 405, F4R 408, F4R 410, F4R 412, F4R 414, F4R 416								

Engine	Information	A10	A20	A40	A50	A70	C10 - C30		C20	E01
All engines	Qty: 4						9.6332	C10		

2.0	Petrol	104	04/10->	ENGINE: F4R 402								

Engine	Information	A10	A20	A40	A50	A70	C10 - C30		C20	E01
All engines	Qty: 4						9.6332	C10		

LODGY

1.2 TCe	Petrol	0	03/12->	ENGINE: H5F 408								

Engine	Information	A10	A20	A40	A50	A70	C10 - C30		C20	E01
All engines	Qty: 4						9.6513	C10		

A10	CONDENSER	A20	CONTACT SET	A40	DISTRIBUTOR CAP	A50	ROTOR	A70	PICK-UP
C10	COIL	C20	IGNITION MODULE	C30	ELECTRONIC IGNITION KIT	E01	IGNITION CABLE SET		

The present application list is a brief version. For the detailed information about the possibility of installation on a specific vehicle, please refer to our web-catalogue http://catalogo.facet.eu/

Vehicle	alim.	kW	Date	Engine	FUNCTIONS ON THE VEHICLE A10	A20	A40	A50	A70	C10 - C30	C20	E01
1.2 TCe	Petrol	85	03/12->	ENGINE H5F 402, H5F 408								
Engine: All engines — Information: x 4, COIL ON PLUG										9.6513 C10		
1.6	Petrol	0	03/12->	ENGINE H4M 738, K4M 845								
Engine: Eng. K4M 845 — Information: Qty: 4										9.6332 C10		
Engine: Eng. H4M 738 — Information: Qty: 4										9.6513 C10		
1.6	Petrol	61	03/12->	ENGINE K7M 812, K7M 828								
Engine: Eng. K7M 812 — Information: x 1, D.I.S.										9.6496 C10		
Engine: Eng. K7M 828										9.6496 C10		
Engine: All engines												4.7252
1.6 LPG	Petrol/ Liquified Petro-leum Gas (LPG)	61	11/13->	ENGINE K7M 812, K7M 828								
Engine: All engines — Information: x 1, D.I.S.										9.6496 C10		
Engine: All engines												4.7252
1.6 LPG	Petrol/ Liquified Petro-leum Gas (LPG)	75	04/15->	ENGINE H4M 740								
Engine: All engines — Information: x 4, COIL ON PLUG										9.6513 C10		
1.6 LPG	Petrol/ Liquified Petro-leum Gas (LPG)	80	08/18->	ENGINE H4M 740								
Engine: All engines — Information: x 4, COIL ON PLUG										9.6513 C10		
1.6 SCe 100	Petrol	75	06/15->	ENGINE H4M 738, H4M 740								
Engine: Eng. H4M 738 — Information: x 4, COIL ON PLUG										9.6513 C10		
Engine: Eng. H4M 740 — Information: Qty: 4										9.6513 C10		
LOGAN I												
1.0 Hi-Flex	Petrol/ Ethanol	56	01/11-10/12	ENGINE D4D760								
Engine: All engines — Information: x 1, D.I.S.										9.6418 C10		
1.2 16V	Petrol	55	02/06->	ENGINE D4F 732								
Engine: All engines — Information: x 1, D.I.S.										9.6418 C10		
Engine: All engines												4.7246
1.2 16V LPG	Petrol/ Liquified Petro-leum Gas (LPG)	55	02/06->	ENGINE D4F 734								
Engine: All engines — Information: x 1, D.I.S.										9.6418 C10		
1.4	Petrol	55	09/04->	ENGINE K7J 710								
Engine: All engines										9.6496 C10		4.7252

A10	CONDENSER	A20	CONTACT SET	A40	DISTRIBUTOR CAP	A50	ROTOR	A70	PICK-UP
C10	COIL	C20	IGNITION MODULE	C30	ELECTRONIC IGNITION KIT	E01	IGNITION CABLE SET		

The present application list is a brief version. For the detailed information about the possibility of installation on a specific vehicle, please refer to our web-catalogue http://catalogo.facet.eu/

Vehicle	alim.	kW	Date	Engine	FUNCTIONS ON THE VEHICLE: A10	A20	A40	A50	A70	C10 - C30	C20	E01
1.4	Petrol	55	09/04->	K7J 710								

Engine	Information	A10	A20	A40	A50	A70	C10 - C30		C20	E01
All engines	x 1, D.I.S.						9.6496	C10		
All engines	->year 18/03/05									4.7244
All engines	18/03/05 ->									4.7252

1.4 MPI LPG	Petrol/ Liquified Petro-leum Gas (LPG)	55	02/06-12/12	K7J 710, K7J 714

Engine	Information	A10	A20	A40	A50	A70	C10 - C30		C20	E01
Eng. K7J 710							9.6496	C10		4.7252
Eng. K7J 714	x 1, D.I.S.						9.6496	C10		

1.6	Petrol	64	09/04->	K7M 710

Engine	Information	A10	A20	A40	A50	A70	C10 - C30		C20	E01
All engines	->year 01/11/11, x 1, D.I.S., x 1, D.I.S. ---------- 01/12/11 ->, x 1, D.I.S.						9.6496	C10		
All engines	->year 18/03/05									4.7244
All engines										4.7252
All engines	18/03/05 ->									4.7252

1.6 16V	Petrol	77	12/05->	K4M 690, K4M 694, K4M 696, K4M 697, K4M 698

Engine	Information	A10	A20	A40	A50	A70	C10 - C30		C20	E01
All engines	x 4, SAGEM, COIL ON PLUG						9.6332	C10		
Eng. K4M 694	Qty: 4						9.6332	C10		

1.6 16V Flexifuel	Petrol/ Ethanol	77	07/10->	K4M 696

Engine	Information	A10	A20	A40	A50	A70	C10 - C30		C20	E01
All engines	x 4, SAGEM, COIL ON PLUG						9.6332	C10		

1.6 16V Hi-Flex	Petrol/ Ethanol	77	11/09->	K4M 690, K4M 696

Engine	Information	A10	A20	A40	A50	A70	C10 - C30		C20	E01
Eng. K4M 690	Qty: 4						9.6332	C10		
Eng. K4M 696	x 4, SAGEM, COIL ON PLUG						9.6332	C10		

1.6 Bifuel	Bi-Fuel	62	05/10->	K7M 800

Engine	Information	A10	A20	A40	A50	A70	C10 - C30		C20	E01
All engines							9.6496	C10		4.7252
Eng. K7M 800							9.6496	C10		4.7252
Eng. K7M 718, K7M 818	x 1, D.I.S.						9.6496	C10		

1.6 Bifuel	Petrol/ Liquified Petro-leum Gas (LPG)	64	11/08->	K7M 710, K7M 718

Engine	Information	A10	A20	A40	A50	A70	C10 - C30		C20	E01
Eng. K7M 710							9.6496	C10		
Eng. K7M 718	x 1, D.I.S.						9.6496	C10		
Eng. K7M 710	->year 18/03/05									4.7244
Eng. K7M 710	18/03/05 ->									4.7252

1.6 LPG	Petrol/ Liquified Petro-leum Gas (LPG)	62	05/10-12/12	K7M 818

Engine	Information	A10	A20	A40	A50	A70	C10 - C30		C20	E01
All engines	x 1, D.I.S.						9.6496	C10		

A10	CONDENSER	A20	CONTACT SET	A40	DISTRIBUTOR CAP	A50	ROTOR	A70	PICK-UP
C10	COIL	C20	IGNITION MODULE	C30	ELECTRONIC IGNITION KIT	E01	IGNITION CABLE SET		

The present application list is a brief version. For the detailed information about the possibility of installation on a specific vehicle, please refer to our web-catalogue http://catalogo.facet.eu/

Vehicle	alim.	kW	Date	Engine	FUNCTIONS ON THE VEHICLE A10	A20	A40	A50	A70	C10 - C30	C20	E01
1.6 LPG	Petrol/ Liquified Petro-leum Gas (LPG)	64	08/04-03/11	ENGINE K7M 718								
Engine: All engines — Information: x 1, D.I.S.										9.6496 C10		
1.6 MPI 85	Petrol	62	05/10->	ENGINE K7M 800								
Engine: All engines — Information: x 1, D.I.S.										9.6496 C10		
Engine: All engines — Information:												4.7252
LOGAN II												
1.0	Petrol	0	10/12->	ENGINE D4D 754								
Engine: All engines — Information:										9.6418 C10		
1.2	Petrol	54	05/15->	ENGINE D4F 732								
Engine: All engines — Information: x 1, D.I.S.										9.6418 C10		
1.2	Petrol	55	10/12->	ENGINE D4F 732, D4F 734								
Engine: All engines — Information: x 1, D.I.S.										9.6418 C10		
1.2 LPG	Petrol/ Liquified Petro-leum Gas (LPG)	53	02/13->	ENGINE D4F 734								
Engine: All engines — Information: x 1, D.I.S.										9.6418 C10		
1.2 LPG	Petrol/ Liquified Petro-leum Gas (LPG)	55	10/12->	ENGINE D4F 732, D4F 734								
Engine: All engines — Information: x 1, D.I.S.										9.6418 C10		
1.6	Petrol	63	06/13-08/16	ENGINE K7M 812								
Engine: All engines — Information: x 1, D.I.S.										9.6496 C10		
1.6 16V	Petrol	0	10/12->	ENGINE K4M 845, K7M 812								
Engine: Eng. K4M 845 — Information: Qty: 4										9.6332 C10		
Engine: Eng. K7M 812 — Information:										9.6496 C10		4.7252
1.6 16V	Petrol	77	01/13->	ENGINE K4M 842, K7M 764								
Engine: Eng. K4M 842 — Information: x 4, SAGEM, COIL ON PLUG										9.6332 C10		
Engine: Eng. K7M 764 — Information:										9.6496 C10		4.7252
2.0	Petrol	0	10/12->	ENGINE F4R 412, F4R 416								
Engine: All engines — Information: Qty: 4										9.6332 C10		
TCe 90	Petrol	0	10/12->	ENGINE H4B 408, H4B 410								
Engine: All engines — Information: Qty: 3										9.6513 C10		

A10	CONDENSER	A20	CONTACT SET	A40	DISTRIBUTOR CAP	A50	ROTOR	A70	PICK-UP
C10	COIL	C20	IGNITION MODULE	C30	ELECTRONIC IGNITION KIT	E01	IGNITION CABLE SET		

The present application list is a brief version. For the detailed information about the possibility of installation on a specific vehicle, please refer to our web-catalogue http://catalogo.facet.eu/

Vehicle	alim.	kW	Date	Engine	FUNCTIONS ON THE VEHICLE A10	A20	A40	A50	A70	C10 - C30	C20	E01
TCe 90	Petrol	66	10/12->	ENGINE H4B 400, H4B 408								
Engine: All engines	Information: x 3, COIL ON PLUG									9.6513 C10		
TCe 90 LPG	Petrol/ Liquified Petro-leum Gas (LPG)	66	09/15->	ENGINE H4B 410								
Engine: All engines	Information: x 3, COIL ON PLUG									9.6513 C10		

LOGAN II MCV

1.0 LPG	Petrol/ Liquified Petro-leum Gas (LPG)	74	11/19->	ENGINE H4D 450, H4D 460								
Engine: All engines	Information: x 3, COIL ON PLUG									9.6452 C10		
1.0 TCe 100	Petrol	74	11/19->	ENGINE H4D 450, H4D 460								
Engine: All engines	Information: x 3, COIL ON PLUG									9.6452 C10		
1.2	Petrol	54	05/15->	ENGINE D4F 732								
Engine: All engines	Information: x 1, D.I.S.									9.6418 C10		
1.2	Petrol	55	02/13->	ENGINE D4F 732								
Engine: All engines	Information: x 1, D.I.S.									9.6418 C10		
1.2 LPG	Petrol/ Liquified Petro-leum Gas (LPG)	53	02/13->	ENGINE D4F 734								
Engine: All engines	Information: x 1, D.I.S.									9.6418 C10		
1.2 LPG	Petrol/ Liquified Petro-leum Gas (LPG)	55	02/13->	ENGINE D4F 732, D4F 734								
Engine: All engines	Information: x 1, D.I.S.									9.6418 C10		
1.6	Petrol	62	06/13->	ENGINE K7M 812								
Engine: All engines	Information: x 1, D.I.S.									9.6496 C10		
TCe 90	Petrol	66	02/13->	ENGINE H4B 400, H4B 408								
Engine: All engines	Information: x 3, COIL ON PLUG									9.6513 C10		
TCe 90 LPG	Petrol/ Liquified Petro-leum Gas (LPG)	66	09/15->	ENGINE H4B 410								
Engine: All engines	Information: K8M1, x 3, COIL ON PLUG									9.6513 C10		

A10	CONDENSER	A20	CONTACT SET	A40	DISTRIBUTOR CAP	A50	ROTOR	A70	PICK-UP
C10	COIL	C20	IGNITION MODULE	C30	ELECTRONIC IGNITION KIT	E01	IGNITION CABLE SET		

The present application list is a brief version. For the detailed information about the possibility of installation on a specific vehicle, please refer to our web-catalogue http://catalogo.facet.eu/

Vehicle	alim.	kW	Date	Engine	FUNCTIONS ON THE VEHICLE							
					A10	A20	A40	A50	A70	C10 - C30	C20	E01
SANDERO												
1.0 TCe 100	Petrol	74	01/21->	H4D480								
All engines				x 3, COIL ON PLUG						9.6452 C10		
1.0 TCe 100 ECO-G	Petrol/ Liquified Petro-leum Gas (LPG)	74	01/21->	H4D480								
All engines				x 3, COIL ON PLUG						9.6452 C10		
1.0 TCe 90	Petrol	67	01/21->	H4D470								
All engines				x 3, COIL ON PLUG						9.6452 C10		
1.0 TCe 90 ECO-G	Petrol/ Liquified Petro-leum Gas (LPG)	67	01/21->	H4D470								
All engines				x 3, COIL ON PLUG						9.6452 C10		
SANDERO I												
1.0 Hi-Flex	Petrol/ Ethanol	56	01/11-12/12	D4D760								
All engines				x 1, D.I.S.						9.6418 C10		
1.2 16V	Petrol	55	11/08->	D4F 732								
All engines				x 1, D.I.S.						9.6418 C10		
All engines												4.7246
1.2 16V LPG	Petrol/ Liquified Petro-leum Gas (LPG)	55	11/08->	D4F 732, D4F 734								
Eng. D4F 732										9.6418 C10		4.7246
Eng. D4F 734				x 1, D.I.S.						9.6418 C10		
1.4	Petrol	55	06/08->	K7J 710								
All engines				x 1, D.I.S.						9.6496 C10		
All engines				->year 18/03/05								4.7244
All engines				18/03/05 ->								4.7252
1.4 MPI LPG	Petrol/ Liquified Petro-leum Gas (LPG)	53	01/09->	K7J 714								
All engines				x 1, D.I.S.						9.6496 C10		
1.6	Petrol	62	06/08->	K7M 718								
All engines										9.6496 C10		4.7252
1.6	Petrol	64	06/08->	K7M 710								
All engines				x 1, D.I.S.						9.6496 C10		
All engines												4.7252

A10	CONDENSER	**A20**	CONTACT SET	**A40**	DISTRIBUTOR CAP	**A50**	ROTOR	**A70**	PICK-UP
C10	COIL	**C20**	IGNITION MODULE	**C30**	ELECTRONIC IGNITION KIT	**E01**	IGNITION CABLE SET		

The present application list is a brief version. For the detailed information about the possibility of installation on a specific vehicle, please refer to our web-catalogue http://catalogo.facet.eu/

Vehicle	alim.	kW	Date	Engine	FUNCTIONS ON THE VEHICLE: A10	A20	A40	A50	A70	C10 - C30	C20	E01
1.6 16V	Petrol	77	07/11->	K4M 690, K4M 694								
Engine: All engines — Information: x 4, SAGEM, COIL ON PLUG										9.6332 C10		
1.6 16V Bifuel	Petrol/ Ethanol	77	01/11->	K4M 690, K4M 696								
Engine: Eng. K4M 690 — Information: Qty: 4										9.6332 C10		
Engine: Eng. K4M 696 — Information: x 4, SAGEM, COIL ON PLUG										9.6332 C10		
1.6 Hi-Flex	Petrol/ Ethanol	64	06/08-12/12	K7M 732								
Engine: All engines — Information: x 1, D.I.S.										9.6496 C10		
1.6 LPG	Petrol/ Liquified Petro-leum Gas (LPG)	60	01/11-12/12	K7M 818								
Engine: All engines — Information: x 1, D.I.S.										9.6496 C10		
1.6 LPG	Petrol/ Liquified Petro-leum Gas (LPG)	62	05/10-10/12	K7M 818								
Engine: All engines — Information: x 1, D.I.S.										9.6496 C10		
1.6 LPG	Petrol/ Liquified Petro-leum Gas (LPG)	64	06/08-12/12	K7M 718								
Engine: All engines — Information: x 1, D.I.S.										9.6496 C10		
1.6 MPI 85	Petrol	62	05/10-06/13	K7M 800								
Engine: All engines — Information: x 1, D.I.S.										9.6496 C10		
Engine: All engines — Information:												4.7252
SANDERO II												
1.0	Petrol	0	10/12->	D4D 754								
Engine: All engines — Information:										9.6418 C10		
1.0 LPG	Petrol/ Liquified Petro-leum Gas (LPG)	74	11/19->	H4D 450, H4D 460								
Engine: All engines — Information: x 3, COIL ON PLUG										9.6452 C10		
1.0 TCe 100	Petrol	74	11/19->	H4D 450, H4D 460								
Engine: All engines — Information: x 3, COIL ON PLUG										9.6452 C10		
1.0 TCE 90 GPF	Petrol	67	01/21->	H4D470								
Engine: All engines — Information: x 3, COIL ON PLUG										9.6452 C10		

A10	CONDENSER	A20	CONTACT SET	A40	DISTRIBUTOR CAP	A50	ROTOR	A70	PICK-UP
C10	COIL	C20	IGNITION MODULE	C30	ELECTRONIC IGNITION KIT	E01	IGNITION CABLE SET		

The present application list is a brief version. For the detailed information about the possibility of installation on a specific vehicle, please refer to our web-catalogue http://catalogo.facet.eu/

Vehicle	alim.	kW	Date	Engine	FUNCTIONS ON THE VEHICLE							
					A10	A20	A40	A50	A70	C10 - C30	C20	E01
1.2	Petrol	54	05/15->	ENGINE D4F 732								
Engine: All engines — Information: x 1, D.I.S.										9.6418 C10		
1.2	Petrol	55	10/12->	ENGINE D4F 732, D4F 734								
Engine: All engines — Information: x 1, D.I.S.										9.6418 C10		
1.2 LPG	Petrol/ Liquified Petro-leum Gas (LPG)	55	10/12->	ENGINE D4F 732, D4F 734								
Engine: All engines										9.6418 C10		
Engine: Eng. D4F 734 — Information: x 1, D.I.S.										9.6418 C10		
1.6	Petrol	63	11/12->	ENGINE K7M 812								
Engine: All engines										9.6496 C10		4.7252
1.6 16V	Petrol	77	01/13->	ENGINE K4M 842, K4M 845								
Engine: All engines — Information: Qty: 4										9.6332 C10		
1.6 I	Petrol	77	10/12->	ENGINE K7M 764								
Engine: All engines										9.6496 C10		4.7252
2.0	Petrol	0	10/12->	ENGINE F4R 416								
Engine: All engines — Information: Qty: 4										9.6332 C10		
2.0 LPG	Petrol/ Liquified Petro-leum Gas (LPG)	0	10/12->	ENGINE F4R 412								
Engine: All engines — Information: Qty: 4										9.6332 C10		
TCe 90	Petrol	0	10/12->	ENGINE --								
Engine: All engines — Information: Qty: 3										9.6513 C10		
TCe 90	Petrol	66	10/12->	ENGINE H4B 400, H4B 408								
Engine: All engines — Information: x 3, COIL ON PLUG										9.6513 C10		
TCe 90 LPG	Petrol/ Liquified Petro-leum Gas (LPG)	66	09/15->	ENGINE H4B 410								
Engine: All engines — Information: x 3, COIL ON PLUG										9.6513 C10		
SOLENZA												
1.4	Petrol	55	02/03-10/05	ENGINE E7J 262								
Engine: All engines — Information: x 1, D.I.S.										9.6496 C10		

A10	CONDENSER	A20	CONTACT SET	A40	DISTRIBUTOR CAP	A50	ROTOR	A70	PICK-UP
C10	COIL	C20	IGNITION MODULE	C30	ELECTRONIC IGNITION KIT	E01	IGNITION CABLE SET		

The present application list is a brief version. For the detailed information about the possibility of installation on a specific vehicle, please refer to our web-catalogue http://catalogo.facet.eu/

Vehicle	alim.	kW	Date	Engine	FUNCTIONS ON THE VEHICLE A10	A20	A40	A50	A70	C10 - C30	C20	E01

ARANOS

				ENGINE
1.5	Petrol	66	01/95-11/97	V15L

Engine	Information	A10	A20	A40	A50	A70	C10 - C30	C20	E01
All engines	version Delco Remy			2.7575PHT					
All engines									4.9433

				ENGINE
1.8	Petrol	70	01/95-11/97	Y18L

Engine	Information	A10	A20	A40	A50	A70	C10 - C30	C20	E01
All engines	version Delco Remy			2.7575PHT	3.7598				

ESPERO

				ENGINE
1.5	Petrol	55	10/97-09/99	G15MF

Engine	Information	A10	A20	A40	A50	A70	C10 - C30	C20	E01
All engines									4.9433

				ENGINE
1.5 16V	Petrol	66	02/95-06/99	A15MF

Engine	Information	A10	A20	A40	A50	A70	C10 - C30	C20	E01
All engines	version Delco Remy			2.7575PHT					
All engines									4.9433

				ENGINE
1.8	Petrol	70	02/95-06/99	C18LE

Engine	Information	A10	A20	A40	A50	A70	C10 - C30	C20	E01
All engines	version Delco Remy			2.7575PHT	3.7598				

				ENGINE
2.0	Petrol	77	02/95-06/99	C20LE

Engine	Information	A10	A20	A40	A50	A70	C10 - C30	C20	E01
All engines	version Delco Remy			2.7575PHT	3.7598				

EVANDA

				ENGINE
2.0	Petrol	96	08/02->	L88, X 20 SED

Engine	Information	A10	A20	A40	A50	A70	C10 - C30	C20	E01
All engines									4.9677

KALOS

				ENGINE
1.2	Petrol	53	04/03->	B12S1, F12S3

Engine	Information	A10	A20	A40	A50	A70	C10 - C30	C20	E01
All engines									4.7006

				ENGINE
1.4	Petrol	61	09/02->	F14S3

Engine	Information	A10	A20	A40	A50	A70	C10 - C30	C20	E01
All engines									4.9731

				ENGINE
1.4	Petrol	69	05/03-12/04	F14D3

Engine	Information	A10	A20	A40	A50	A70	C10 - C30	C20	E01
All engines									4.9680

				ENGINE
1.4 16V	Petrol	69	04/03->	F14D3

Engine	Information	A10	A20	A40	A50	A70	C10 - C30	C20	E01
All engines									4.9680

KORANDO

				ENGINE
2.0	Petrol	93	12/98-02/01	E20

Engine	Information	A10	A20	A40	A50	A70	C10 - C30	C20	E01
All engines	x 1, D.I.S.						9.6216 C10		

				ENGINE
2.0 16V	Petrol	94	02/99->	E20, M 161.950

Engine	Information	A10	A20	A40	A50	A70	C10 - C30	C20	E01
Eng. E20	x 1, D.I.S.						9.6216 C10		
Eng. M 161.950	Qty: 2						9.6216 C10		

A10	CONDENSER	A20	CONTACT SET	A40	DISTRIBUTOR CAP	A50	ROTOR	A70	PICK-UP
C10	COIL	C20	IGNITION MODULE	C30	ELECTRONIC IGNITION KIT	E01	IGNITION CABLE SET		

The present application list is a brief version. For the detailed information about the possibility of installation on a specific vehicle, please refer to our web-catalogue http://catalogo.facet.eu/

Vehicle	alim.	kW	Date	Engine	FUNCTIONS ON THE VEHICLE A10	A20	A40	A50	A70	C10 - C30	C20	E01
2.3	Petrol	**103**	01/99-02/01	**E23**								

Engine	Information	A10	A20	A40	A50	A70	C10 - C30		C20	E01
All engines	x 1, D.I.S.						9.6216	C10		

2.3	Petrol	**105**	01/99->	**E23, M 161.970**

Engine	Information	A10	A20	A40	A50	A70	C10 - C30		C20	E01
Eng. E23	x 1, D.I.S.						9.6216	C10		
Eng. M 161.970	Qty: 2						9.6216	C10		

3.2 4x4	Petrol	**156**	01/99->	**E32, M 104.995**

Engine	Information	A10	A20	A40	A50	A70	C10 - C30		C20	E01
Eng. E32	x 1, D.I.S.						9.6216	C10		
Eng. M 104.995	Qty: 3						9.6216	C10		

LACETTI

1.4	Petrol	**70**	02/04->	**F14D3**

Engine	Information	A10	A20	A40	A50	A70	C10 - C30		C20	E01
All engines										4.9509

1.6	Petrol	**80**	02/04->	**F16D3**

Engine	Information	A10	A20	A40	A50	A70	C10 - C30		C20	E01
All engines	x 1, D.I.S.						9.6485	C10		
All engines										4.9509

1.8	Petrol	**90**	02/04->	**T18SED**

Engine	Information	A10	A20	A40	A50	A70	C10 - C30		C20	E01
All engines										4.9677

LANOS

1.3	Petrol	**55**	05/97->	**A14SMS**

Engine	Information	A10	A20	A40	A50	A70	C10 - C30		C20	E01
All engines										4.9731

1.5	Petrol	**63**	05/97->	**A15SMS**

Engine	Information	A10	A20	A40	A50	A70	C10 - C30		C20	E01
All engines										4.9731

1.6 16V	Petrol	**78**	02/97->	**A16DMS**

Engine	Information	A10	A20	A40	A50	A70	C10 - C30		C20	E01
All engines										4.9680

LEGANZA

2.0 16V	Petrol	**93**	07/00-04/04	**T20SED**

Engine	Information	A10	A20	A40	A50	A70	C10 - C30		C20	E01
All engines										4.9677

2.0 16V	Petrol	**98**	06/97-12/02	**X 20 SED**

Engine	Information	A10	A20	A40	A50	A70	C10 - C30		C20	E01
All engines										4.9677

2.2 16V	Petrol	**100**	04/99-12/02	**T22SED**

Engine	Information	A10	A20	A40	A50	A70	C10 - C30		C20	E01
All engines										4.9677

MATIZ

0.8	Petrol	**38**	08/98->	**F8CV**

Engine	Information	A10	A20	A40	A50	A70	C10 - C30		C20	E01
All engines	version Mando			2.8322/39	3.8331/31					
All engines	version Dac			2.8322/72	3.8331/39					
All engines	->VET. 577030						9.6119	C10		4.9634
All engines	->ch. 577030, x 1, DISTRIBUTOR						9.6119	C10		

A10	CONDENSER	**A20**	CONTACT SET	**A40**	DISTRIBUTOR CAP	**A50**	ROTOR	**A70**	PICK-UP
C10	COIL	**C20**	IGNITION MODULE	**C30**	ELECTRONIC IGNITION KIT	**E01**	IGNITION CABLE SET		

The present application list is a brief version. For the detailed information about the possibility of installation on a specific vehicle, please refer to our web-catalogue http://catalogo.facet.eu/

Vehicle	alim.	kW	Date	Engine	FUNCTIONS ON THE VEHICLE							
					A10	A20	A40	A50	A70	C10 - C30	C20	E01
MATIZ												
0.8	Petrol	38	08/98->	F8CV								
Engine: All engines — Information: VET. 577031 ->												4.7007
1.0	Petrol	46	04/03-12/04	B10S								
Engine: All engines												4.7006
1.0	Petrol	47	01/03->	B10S								
Engine: All engines												4.7006
MUSSO												
2.3	Petrol	103	01/99->	M 111.970								
Engine: All engines — Information: Musso, x 1, D.I.S.										9.6216 C10		
3.2 4x4	Petrol	162	01/99->	M 104.992, M162E32								
Engine: Eng. M 104.992 — Information: Qty: 3										9.6216 C10		
Engine: Eng. M162E32 — Information: Musso, x 1, D.I.S.										9.6216 C10		
NEXIA												
1.5	Petrol	44	08/96-08/97	G15MF								
Engine: All engines — Information: version Delco Remy							2.7575PHT	3.7598				
Engine: All engines												4.9942
1.5	Petrol	52	02/95-08/97	G15MF								
Engine: All engines — Information: version Delco Remy							2.7575PHT	3.7598				
Engine: All engines												4.9942
1.5	Petrol	55	02/95-08/97	G15MF								
Engine: All engines — Information: version Delco Remy							2.7575PHT	3.7598				
Engine: All engines												4.9942
1.5 16V	Petrol	66	02/95-08/97	A15MF								
Engine: All engines — Information: version Delco Remy							2.7575PHT					
Engine: All engines												4.9433
NUBIRA I												
1.6 16V	Petrol	76	07/00->	A16DMS								
Engine: All engines												4.9680
1.6 16V	Petrol	78	05/97-05/99	A16DMS								
Engine: All engines												4.9680
2.0 16V	Petrol	93	12/00->	T20SED								
Engine: All engines												4.9677
2.0 16V	Petrol	98	05/97->	X 20 SED, Z20L								
Engine: All engines												4.9677

A10	CONDENSER	A20	CONTACT SET	A40	DISTRIBUTOR CAP	A50	ROTOR	A70	PICK-UP
C10	COIL	C20	IGNITION MODULE	C30	ELECTRONIC IGNITION KIT	E01	IGNITION CABLE SET		

The present application list is a brief version. For the detailed information about the possibility of installation on a specific vehicle, please refer to our web-catalogue http://catalogo.facet.eu/

Vehicle	alim.	kW	Date	Engine	FUNCTIONS ON THE VEHICLE: A10	A20	A40	A50	A70	C10 - C30	C20	E01
2.0 CDX	Petrol	93	08/02-07/03	**T20SED**								
					Engine: All engines; Information:							4.9677
NUBIRA II												
1.4	Petrol	69	10/03-12/04	**F14D3**								
					Engine: All engines; Information: x 1, D.I.S.					9.6485 C10		
					Engine: All engines; Information:							4.9509
1.6	Petrol	80	07/03->	**F16D3**								
					Engine: All engines; Information: x 1, D.I.S.					9.6485 C10		
					Engine: All engines; Information:							4.9509
1.8	Petrol	90	07/03->	**T18SED**								
					Engine: All engines; Information:							4.9677
REXTON												
3.2 V6	Petrol	162	04/02->	**M 162.992**								
					Engine: All engines; Information: Qty: 3					9.6216 C10		
REZZO												
1.6	Petrol	77	09/00->	**A16DMS**								
					Engine: All engines; Information:							4.9680
1.8	Petrol	66	09/00->	**--**								
					Engine: All engines; Information:							4.9730
1.8	Petrol	67	09/00->	**F18D2**								
					Engine: All engines; Information:							4.9730
1.8	Petrol	72	09/00->	**A18DMS**								
					Engine: All engines; Information:							4.9730
1.8	Petrol	74	09/00->	**--**								
					Engine: All engines; Information:							4.9730
2.0	Petrol	89	09/01-12/04	**X 20 SED**								
					Engine: All engines; Information:							4.9677
2.0	Petrol	94	09/00->	**T20SED**								
					Engine: All engines; Information:							4.9677
TACUMA												
1.6	Petrol	77	09/00-01/05	**A16DMS**								
					Engine: All engines; Information:							4.9680

A10	CONDENSER	**A20**	CONTACT SET	**A40**	DISTRIBUTOR CAP	**A50**	ROTOR	**A70**	PICK-UP
C10	COIL	**C20**	IGNITION MODULE	**C30**	ELECTRONIC IGNITION KIT	**E01**	IGNITION CABLE SET		

The present application list is a brief version. For the detailed information about the possibility of installation on a specific vehicle, please refer to our web-catalogue http://catalogo.facet.eu/

Vehicle	alim.	kW	Date	Engine	FUNCTIONS ON THE VEHICLE							
					A10	A20	A40	A50	A70	C10 - C30	C20	E01
				ENGINE								
2.0	Petrol	89	09/00-01/05	X 20 SED								

Engine	Information	A10	A20	A40	A50	A70	C10 - C30	C20	E01
All engines									4.9677

A10	CONDENSER	A20	CONTACT SET	A40	DISTRIBUTOR CAP	A50	ROTOR	A70	PICK-UP
C10	COIL	C20	IGNITION MODULE	C30	ELECTRONIC IGNITION KIT	E01	IGNITION CABLE SET		

The present application list is a brief version. For the detailed information about the possibility of installation on a specific vehicle, please refer to our web-catalogue http://catalogo.facet.eu/

Vehicle	alim.	kW	Date	Engine	FUNCTIONS ON THE VEHICLE A10	A20	A40	A50	A70	C10 - C30	C20	E01
850												
				ENGINE								
0.8	Petrol	34	07/86-12/89	--								
Engine	Information											
All engines	version Denso					1.3511HDV						
All engines	->year 30/11/86, version Denso							3.7614				
All engines	01/12/86 ->, version Denso							3.7630				
APPLAUSE I												
				ENGINE								
1.6 16V	Petrol	66	06/89-07/97	HD								
Engine	Information											
All engines	version Denso						2.7630/28	3.7628				
				ENGINE								
1.6 16V	Petrol	77	06/89-07/97	HD-E								
Engine	Information											
All engines	version Denso						2.7630/28	3.7628				
				ENGINE								
1.6 16V 4WD	Petrol	77	06/89-07/97	HD-E								
Engine	Information											
All engines	version Denso						2.7630/28	3.7628				
CHARADE III												
				ENGINE								
1.0	Petrol	38	03/87-12/92	CB 23								
Engine	Information											
All engines	version Denso					1.3511HDV	2.7594					
All engines	->year 31/12/88, version Denso							3.7614				
All engines	01/01/89 ->, version Denso							3.7630				
				ENGINE								
1.0	Petrol	40	11/90-12/92	CB 90								
Engine	Information											
All engines	version Denso							3.7629				
				ENGINE								
1.0 GTi	Petrol	74	03/87-12/92	CB 80 T								
Engine	Information											
All engines	version Denso							3.7629				
				ENGINE								
1.0i	Petrol	0	01/88->	G102								
Engine	Information											
All engines	version Denso							3.7628				
All engines										9.6152 C10		
				ENGINE								
1.0i [USA]	Petrol	0	01/89->	CB								
Engine	Information											
All engines	version Denso							3.7629				
				ENGINE								
1.0i 12v GTti	Petrol	74	11/90-02/93	CB 70								
Engine	Information											
All engines	version Denso							3.7629				
				ENGINE								
1.3	Petrol	56	09/88-01/92	HC-C								
Engine	Information											
All engines	version Denso						2.7630/28	3.7628				
All engines										9.6152 C10		
				ENGINE								
1.3	Petrol	66	11/90-02/93	HC-E								
Engine	Information											
All engines	version Denso							3.7628				
All engines										9.6152 C10		

A10	CONDENSER	**A20**	CONTACT SET	**A40**	DISTRIBUTOR CAP	**A50**	ROTOR	**A70**	PICK-UP
C10	COIL	**C20**	IGNITION MODULE	**C30**	ELECTRONIC IGNITION KIT	**E01**	IGNITION CABLE SET		

The present application list is a brief version. For the detailed information about the possibility of installation on a specific vehicle, please refer to our web-catalogue http://catalogo.facet.eu/

Vehicle	alim.	kW	Date	Engine	FUNCTIONS ON THE VEHICLE A10	A20	A40	A50	A70	C10 - C30	C20	E01
1.3 i	Petrol	66	06/88-12/92	HC-E								

Engine	Information	A10	A20	A40	A50	A70	C10 - C30	C20	E01
All engines	version Denso				3.7628				
All engines							9.6152 C10		

1.3 i 4WD	Petrol	66	06/88-01/93	HC-E

Engine	Information	A10	A20	A40	A50	A70	C10 - C30	C20	E01
All engines	version Denso				3.7628				
All engines							9.6152 C10		

1.3i [USA]	Petrol	0	01/89->	HC-E

Engine	Information	A10	A20	A40	A50	A70	C10 - C30	C20	E01
All engines	version Denso			2.7630/28	3.7628				

CHARADE VI

1.33 16V	Petrol	73	05/11->	1NR-FE

Engine	Information	A10	A20	A40	A50	A70	C10 - C30	C20	E01
All engines	Charade, x 4, COIL ON PLUG						9.6437 C10		

CUORE II

0.8	Petrol	29	11/89-12/90	ED 10

Engine	Information	A10	A20	A40	A50	A70	C10 - C30	C20	E01
All engines	version Denso			2.7628					
All engines	->year 28/02/87, version Denso				3.7614				
All engines	01/03/87 ->, version Denso				3.7630				

0.8	Petrol	32	09/85-06/90	ED 10

Engine	Information	A10	A20	A40	A50	A70	C10 - C30	C20	E01
All engines	version Denso			2.7628					
All engines	->year 28/02/87, version Denso				3.7614				
All engines	01/03/87 ->, version Denso				3.7630				

0.8 4WD	Petrol	32	09/86-10/88	ED 10

Engine	Information	A10	A20	A40	A50	A70	C10 - C30	C20	E01
All engines	version Denso			2.7628					
All engines	->year 28/02/87, version Denso				3.7614				
All engines	01/03/87 ->, version Denso				3.7630				

CUORE III

0.8	Petrol	30	10/90-12/94	ED 10 K

Engine	Information	A10	A20	A40	A50	A70	C10 - C30	C20	E01
All engines	01/08/92 ->								4.9436

CUORE IV

0.8	Petrol	32	01/95-08/98	ED 20

Engine	Information	A10	A20	A40	A50	A70	C10 - C30	C20	E01
All engines	->year 30/11/96, LHD								4.9436

CUORE VII

1.0 LPG	Petrol/ Liquified Petro-leum Gas (LPG)	51	09/11-12/12	1KR-FE

Engine	Information	A10	A20	A40	A50	A70	C10 - C30	C20	E01
All engines	x 3, COIL ON PLUG						9.6361 C10		

DOMINO

0.8	Petrol	32	08/85-07/90	ED

Engine	Information	A10	A20	A40	A50	A70	C10 - C30	C20	E01
All engines	version Denso			2.7628					
All engines	->year 28/02/87, version Denso				3.7614				
All engines	01/03/87 ->, version Denso				3.7630				

A10	CONDENSER	A20	CONTACT SET	A40	DISTRIBUTOR CAP	A50	ROTOR	A70	PICK-UP
C10	COIL	C20	IGNITION MODULE	C30	ELECTRONIC IGNITION KIT	E01	IGNITION CABLE SET		

The present application list is a brief version. For the detailed information about the possibility of installation on a specific vehicle, please refer to our web-catalogue http://catalogo.facet.eu/

Vehicle	alim.	kW	Date	Engine	FUNCTIONS ON THE VEHICLE: A10	A20	A40	A50	A70	C10 - C30	C20	E01
0.8i	Petrol	32	08/90-10/98	ED20								
Engine: All engines	Information: 01/08/92 ->											4.9436
FEROZA												
1.6 16V	Petrol	63	10/88-12/99	HD-C								
All engines	version Denso						2.7630/27					
All engines	->year 31/12/95, version Denso							3.7628				
All engines												4.9732
1.6 16V 4x4	Petrol	63	10/88-12/99	HD-C								
All engines	version Denso						2.7630/27	3.7628				
All engines												4.9732
1.6 i 16V	Petrol	70	10/88-12/99	HD-E								
All engines	->year 31/12/95, version Denso						2.7630/27	3.7628				
All engines												4.9732
1.6 i 16V 4x4	Petrol	70	10/88-12/99	HD-E								
All engines	->year 31/12/95, version Denso						2.7630/27	3.7628				
All engines												4.9732
1.6i	Petrol	0	01/84->	--								
All engines	version Denso					1.3511HDV	2.7630/27					
All engines	->year 31/12/89, version Denso							3.7614				
All engines	01/01/90 ->, version Denso							3.7628				
All engines												4.9732
HIJET I												
1.0	Petrol	33	06/86-12/89	CB								
All engines	version Denso					1.3511HDV		3.7614				
HIJET II												
1.3 i 16V	Petrol	48	05/98-10/05	HC-E								
All engines	01/05/98 ->									C10 9.6152		
MIRA												
0.8i	Petrol	32	12/94-02/97	ED20								
All engines	->year 31/12/96, LHD											4.9436
MOVE												
0.8	Petrol	31	01/97-11/99	ED 20								
All engines												4.9436
ROCKY												
2.0i [USA]	Petrol	0	01/89->	--								
All engines	version Denso						2.7630/27	3.7628				
All engines												4.9732

A10	CONDENSER	A20	CONTACT SET	A40	DISTRIBUTOR CAP	A50	ROTOR	A70	PICK-UP
C10	COIL	C20	IGNITION MODULE	C30	ELECTRONIC IGNITION KIT	E01	IGNITION CABLE SET		

The present application list is a brief version. For the detailed information about the possibility of installation on a specific vehicle, please refer to our web-catalogue http://catalogo.facet.eu/

Vehicle	alim.	kW	Date	Engine	FUNCTIONS ON THE VEHICLE							
					A10	A20	A40	A50	A70	C10 - C30	C20	E01

SPORTRACK

				ENGINE
1.6 16v 4x4	Petrol	62	10/88-08/93	HD-C

Engine	Information	A10	A20	A40	A50	A70	C10 - C30	C20	E01
All engines	version Denso			2.7630/27	3.7628				
All engines									4.9732

A10	CONDENSER	A20	CONTACT SET	A40	DISTRIBUTOR CAP	A50	ROTOR	A70	PICK-UP
C10	COIL	C20	IGNITION MODULE	C30	ELECTRONIC IGNITION KIT	E01	IGNITION CABLE SET		

The present application list is a brief version. For the detailed information about the possibility of installation on a specific vehicle, please refer to our web-catalogue http://catalogo.facet.eu/

Vehicle	alim.	kW	Date	Engine	FUNCTIONS ON THE VEHICLE							
					A10	A20	A40	A50	A70	C10 - C30	C20	E01

2.8 - 5.3

Sovereign 2.8	Petrol	110	10/69-05/75	ENGINE --

Engine	Information	A10	A20	A40	A50	A70	C10 - C30	C20	E01
All engines					3.8107				

Sovereign 4.2	Petrol	127	09/73-03/79	ENGINE --

Engine	Information	A10	A20	A40	A50	A70	C10 - C30	C20	E01
All engines					3.8107				

Sovereign 4.2	Petrol	137	10/69-09/73	ENGINE --

Engine	Information	A10	A20	A40	A50	A70	C10 - C30	C20	E01
All engines					3.8107				

A10	CONDENSER	A20	CONTACT SET	A40	DISTRIBUTOR CAP	A50	ROTOR	A70	PICK-UP
C10	COIL	C20	IGNITION MODULE	C30	ELECTRONIC IGNITION KIT	E01	IGNITION CABLE SET		

DS

Vehicle	alim.	kW	Date	Engine	FUNCTIONS ON THE VEHICLE A10	A20	A40	A50	A70	C10 - C30	C20	E01

DS 4

				ENGINE
PureTech 180	Petrol	133	10/21->	5GF (EP6FADTXD)

Engine	Information	A10	A20	A40	A50	A70	C10 - C30		C20	E01
All engines	x 4, COIL ON PLUG						9.6375	C10		

DS 5

				ENGINE
1.6 THP 165	Petrol	121	07/15-12/18	5GZ (EP6FDT)

Engine	Information	A10	A20	A40	A50	A70	C10 - C30		C20	E01
All engines	x 4, COIL ON PLUG						9.6375	C10		

				ENGINE
1.6 THP 210	Petrol	155	04/15-12/18	5GM (EP6FDTX)

Engine	Information	A10	A20	A40	A50	A70	C10 - C30		C20	E01
All engines	x 4, COIL ON PLUG						9.6375	C10		

DS 7

				ENGINE
1.6 PureTech 180	Petrol	133	04/18->	5GF (EP6FADTXD)

Engine	Information	A10	A20	A40	A50	A70	C10 - C30		C20	E01
All engines	x 4, COIL ON PLUG						9.6375	C10		

				ENGINE
1.6 PureTech 225	Petrol	165	09/17->	5GC (EP6FADTX)

Engine	Information	A10	A20	A40	A50	A70	C10 - C30		C20	E01
All engines	x 4, COIL ON PLUG						9.6375	C10		

				ENGINE
E-TENSE	Petrol/ Electric	133	10/19->	5GQ (EP6FADTXHP)

Engine	Information	A10	A20	A40	A50	A70	C10 - C30		C20	E01
All engines	x 4, COIL ON PLUG						9.6375	C10		

				ENGINE
E-TENSE 225	Petrol/ Electric	133	05/21->	5GQ (EP6FADTXHP)

Engine	Information	A10	A20	A40	A50	A70	C10 - C30		C20	E01
All engines	x 4, COIL ON PLUG						9.6375	C10		

				ENGINE
E-TENSE 225	Petrol/ Electric	165	05/21->	5GQ (EP6FADTXHP)

Engine	Information	A10	A20	A40	A50	A70	C10 - C30		C20	E01
All engines	x 4, COIL ON PLUG						9.6375	C10		

				ENGINE
E-TENSE 4x4	Petrol/ Electric	147	05/19->	5GB (EP6FADTXHP)

Engine	Information	A10	A20	A40	A50	A70	C10 - C30		C20	E01
All engines	x 4, COIL ON PLUG						9.6375	C10		

				ENGINE
E-TENSE 4x4	Petrol/ Electric	221	05/19->	5GB (EP6FADTXHP)

Engine	Information	A10	A20	A40	A50	A70	C10 - C30		C20	E01
All engines	x 4, COIL ON PLUG						9.6375	C10		

DS3

				ENGINE
1.2 THP 110 / PureTech 110	Petrol	81	04/15-07/19	HNP (EB2ADT), HNZ (EB2DT)

Engine	Information	A10	A20	A40	A50	A70	C10 - C30		C20	E01
All engines	x 3, COIL ON PLUG						9.6520	C10		

				ENGINE
1.2 THP 130	Petrol	96	09/15-07/19	HNY (EB2DTS)

Engine	Information	A10	A20	A40	A50	A70	C10 - C30		C20	E01
All engines	x 3, COIL ON PLUG						9.6520	C10		

				ENGINE
1.2 VTi 82	Petrol	60	04/15-07/19	HMZ (EB2), HMZ (EB2F)

Engine	Information	A10	A20	A40	A50	A70	C10 - C30		C20	E01
All engines	x 3, COIL ON PLUG						9.6509	C10		

A10	CONDENSER	A20	CONTACT SET	A40	DISTRIBUTOR CAP	A50	ROTOR	A70	PICK-UP
C10	COIL	C20	IGNITION MODULE	C30	ELECTRONIC IGNITION KIT	E01	IGNITION CABLE SET		

The present application list is a brief version. For the detailed information about the possibility of installation on a specific vehicle, please refer to our web-catalogue http://catalogo.facet.eu/

Vehicle	alim.	kW	Date	Engine	FUNCTIONS ON THE VEHICLE							
					A10	A20	A40	A50	A70	C10 - C30	C20	E01
1.6 THP	Petrol	110	07/15-07/19	ENGINE 5GW (EP6FDT), 5GX (EP6FDTMD)								
Engine: All engines	Information: x 4, COIL ON PLUG									9.6375 C10		
1.6 THP	Petrol	120	07/15-07/19	ENGINE 5GZ (EP6FDT)								
Engine: All engines	Information: x 4, COIL ON PLUG									9.6375 C10		
1.6 THP 165	Petrol	121	07/15-07/19	ENGINE 5GZ (EP6FDT)								
Engine: All engines	Information: x 4, COIL ON PLUG									9.6375 C10		
1.6 THP 208	Petrol	153	09/15-07/19	ENGINE 5GR (EP6FDTX)								
Engine: All engines	Information: x 4, COIL ON PLUG									9.6375 C10		
DS4 / DS4 CROSSBACK												
1.2 THP 130	Petrol	96	07/15-12/18	ENGINE HNY (EB2DTS)								
Engine: All engines	Information: x 3, COIL ON PLUG									9.6520 C10		
1.6 THP 150	Petrol	110	10/16-12/18	ENGINE 5FE (EP6CDTMD)								
Engine: All engines	Information: x 4, COIL ON PLUG									9.6375 C10		
1.6 THP 160	Petrol	120	07/15-12/18	ENGINE 5FM (EP6CDTM)								
Engine: All engines	Information: x 4, COIL ON PLUG									9.6375 C10		
1.6 THP 165	Petrol	121	07/15-12/18	ENGINE 5GZ (EP6FDT)								
Engine: All engines	Information: x 4, COIL ON PLUG									9.6375 C10		
1.6 THP 210	Petrol	155	07/15-12/18	ENGINE 5GM (EP6FDTX)								
Engine: All engines	Information: x 4, COIL ON PLUG									9.6375 C10		

A10	CONDENSER	A20	CONTACT SET	A40	DISTRIBUTOR CAP	A50	ROTOR	A70	PICK-UP
C10	COIL	C20	IGNITION MODULE	C30	ELECTRONIC IGNITION KIT	E01	IGNITION CABLE SET		

The present application list is a brief version. For the detailed information about the possibility of installation on a specific vehicle, please refer to our web-catalogue http://catalogo.facet.eu/

Vehicle	alim.	kW	Date	Engine	FUNCTIONS ON THE VEHICLE							
					A10	A20	A40	A50	A70	C10 - C30	C20	E01
124												
				ENGINE								
1200	Petrol	44	07/66-10/73	124 A.000								
Engine	Information											
All engines	version Ducellier					1.3656	2.7659PHT	3.7683RS				
All engines	version Marelli					1.4932	2.8169	3.8254RS				
All engines										9.6001D C10		
				ENGINE								
1400 Special	Petrol	51	12/68-12/72	124 B2.000								
Engine	Information											
All engines	version Ducellier					1.3656	2.7659PHT	3.7683RS				
All engines	version Marelli					1.4932	2.8169	3.8254RS				
All engines										9.6001D C10		
				ENGINE								
1600 Special T	Petrol	70	01/73-07/75	132 AC.000								
Engine	Information											
All engines	version Ducellier					1.3656	2.7659PHT	3.7683RS				
All engines	version Marelli					1.4932	2.8169	3.8254RS				
All engines										9.6001D C10		
125												
				ENGINE								
1.6	Petrol	66	07/67-03/74	125 A.000								
Engine	Information											
All engines								3.8237				
126												
				ENGINE								
600	Petrol	17	09/72-06/77	126 A.000								
Engine	Information											
All engines	version Marelli					1.4920	2.8186	3.8240				
All engines										9.6001D C10		4.8507
				ENGINE								
650	Petrol	17	07/77-09/87	126 A1.048								
Engine	Information											
All engines	version Marelli					1.4950M						
All engines												4.8432
				ENGINE								
700	Petrol	19	09/87-06/96	126 A2.000, 126 A2.048								
Engine	Information											
All engines	version Marelli				0.0628							
All engines												4.8351
127												
				ENGINE								
0.9	Petrol	29	06/71-05/83	100 GL.048								
Engine	Information											
All engines	version Ducellier				0.0323	1.3691/1	2.7658PHT	3.7683RS				
All engines	version Marelli				0.0617	1.4942		3.8242RS				
All engines	version Femsa					1.3720	2.7716	3.7752RS				
All engines										9.6001D C10		4.8429
				ENGINE								
0.9	Petrol	33	09/71-12/84	100 GL.000								
Engine	Information											
All engines	version Marelli					1.4939		3.8237RS				
All engines										9.6001D C10		4.8429
				ENGINE								
1.0	Petrol	37	01/77-12/86	127 A.000								
Engine	Information											
All engines	version Marelli				0.0617	1.4942	2.8190	3.8242RS				
All engines										9.6001D C10		

A10	CONDENSER	**A20**	CONTACT SET	**A40**	DISTRIBUTOR CAP	**A50**	ROTOR	**A70**	PICK-UP
C10	COIL	**C20**	IGNITION MODULE	**C30**	ELECTRONIC IGNITION KIT	**E01**	IGNITION CABLE SET		

The present application list is a brief version. For the detailed information about the possibility of installation on a specific vehicle, please refer to our web-catalogue http://catalogo.facet.eu/

Vehicle	alim.	kW	Date	Engine	FUNCTIONS ON THE VEHICLE							
					A10	A20	A40	A50	A70	C10 - C30	C20	E01

128

				ENGINE
1.1	Petrol	40	03/69-12/84	128 A.000

Engine	Information	A10	A20	A40	A50	A70	C10 - C30		C20	E01
All engines	version Ducellier	0.0323	1.3656HDV	2.7649PHT	3.7683RS					
All engines	version Marelli		1.4942	2.8181	3.8236RS					
All engines							9.6001D	C10		

131

				ENGINE
1.3 Mirafiori	Petrol	40	10/74-09/81	131 A6.000

Engine	Information	A10	A20	A40	A50	A70	C10 - C30		C20	E01
All engines	version Ducellier	0.0323	1.3656HDV	2.7659PHT	3.7683RS					
All engines	01/01/76 ->, version Marelli	0.0617	1.4942		3.8242RS					
All engines	version Femsa		1.3720		3.7752					
All engines	->year 31/12/75, version Marelli		1.4939		3.8237RS					
All engines					3.8237		9.6001D	C10		

				ENGINE
1.3 Super Mirafiori	Petrol	57	03/78-12/80	131 B.000

Engine	Information	A10	A20	A40	A50	A70	C10 - C30		C20	E01
All engines					3.8237					

				ENGINE
1.4 Mirafiori	Petrol	51	11/80-01/84	131 C.000, 131 C1.000

Engine	Information	A10	A20	A40	A50	A70	C10 - C30		C20	E01
All engines					3.8237					

				ENGINE
1.6	Petrol	55	10/74-09/81	131 A1.000

Engine	Information	A10	A20	A40	A50	A70	C10 - C30		C20	E01
All engines					3.8237					

				ENGINE
1.6 Super	Petrol	71	03/78-01/84	131 C3.000

Engine	Information	A10	A20	A40	A50	A70	C10 - C30		C20	E01
All engines					3.8237					

				ENGINE
2.0 Super	Petrol	83	01/81-12/84	131 C4.000

Engine	Information	A10	A20	A40	A50	A70	C10 - C30		C20	E01
All engines					3.8237					

132

				ENGINE
1.6	Petrol	65	05/77-09/82	132 C.000

Engine	Information	A10	A20	A40	A50	A70	C10 - C30		C20	E01
All engines	version Ducellier	0.0323	1.3656HDV	2.7659PHT	3.7691					
All engines	version Marelli	0.0617	1.4942	2.8190	3.8242RS					
All engines	version Femsa		1.3720		3.7752RS					
All engines	+air conditioning, version Marelli		1.4939							
All engines	+air conditioning, RHD, version Marelli				3.8237RS					
All engines	+air conditioning, LHD, version Marelli				3.8241					
All engines							9.6001D	C10		

				ENGINE
2.0	Petrol	83	01/76-06/81	132 C2.000

Engine	Information	A10	A20	A40	A50	A70	C10 - C30		C20	E01
All engines	version Bosch			2.7479PHT	3.7525RS					
All engines	+air conditioning, LHD, version Marelli			2.8193						
All engines	version Marelli				3.8254RS	8.4961/1				

242

				ENGINE
1.6	Petrol	46	10/75-07/82	124 B3.000

Engine	Information	A10	A20	A40	A50	A70	C10 - C30		C20	E01
All engines	version Ducellier	0.0323	1.3655	2.7645						
All engines	version Marelli		1.4939							
All engines							9.6001D	C10		

A10	CONDENSER	A20	CONTACT SET	A40	DISTRIBUTOR CAP	A50	ROTOR	A70	PICK-UP
C10	COIL	C20	IGNITION MODULE	C30	ELECTRONIC IGNITION KIT	E01	IGNITION CABLE SET		

The present application list is a brief version. For the detailed information about the possibility of installation on a specific vehicle, please refer to our web-catalogue http://catalogo.facet.eu/

Vehicle	alim.	kW	Date	Engine	FUNCTIONS ON THE VEHICLE							
					A10	A20	A40	A50	A70	C10 - C30	C20	E01
500												
				ENGINE								
0.5	Petrol	11	01/60-12/66	120.000								
Engine	Information											
All engines	version Marelli					1.4920	2.8159	3.8229				
All engines										9.6001D C10		
				ENGINE								
0.5	Petrol	13	01/65-12/75	110 F.000, 120.000								
Engine	Information											
All engines	version Marelli					1.4920	2.8159	3.8229				
All engines										9.6001D C10		
				ENGINE								
0.6	Petrol	13	08/68-01/76	111A000								
Engine	Information											
All engines	version Marelli					1.4920	2.8186	3.8229				
All engines										9.6001D C10		
				ENGINE								
0.9	Petrol	44	12/13->	312 A4.000, 312 A6.000								
Engine	Information											
Eng. 312 A4.000	naturally Asp. Eng., Qty: 2									9.6342 C10		
Eng. 312 A6.000	x 2, COIL ON PLUG, incl. spark plug connector									9.6342 C10		
				ENGINE								
0.9	Petrol	48	09/12->	312 A4.000								
Engine	Information											
All engines	x 2, COIL ON PLUG, incl. spark plug connector									9.6342 C10		
				ENGINE								
1.2	Petrol	51	07/07->	169 A4.000								
Engine	Information											
All engines	x 1, D.I.S.									9.6323 C10		
All engines												4.7170
				ENGINE								
1.2 LPG	Petrol/ Liquified Petro-leum Gas (LPG)	51	12/10->	169 A4.000								
Engine	Information											
All engines	x 1, D.I.S.									9.6323 C10		
				ENGINE								
1.4	Petrol	74	10/07->	169 A3.000								
Engine	Information											
All engines	x 4, COIL ON PLUG, incl. spark plug connector									9.6342 C10		
				ENGINE								
1.4	Petrol	75	09/08->	169 A3.000								
Engine	Information											
All engines	x 4, COIL ON PLUG, incl. spark plug connector									9.6342 C10		
500 C												
				ENGINE								
0.9	Petrol	44	12/13->	312 A6.000								
Engine	Information											
All engines	x 2, COIL ON PLUG, incl. spark plug connector									9.6342 C10		
				ENGINE								
0.9	Petrol	48	09/12->	312 A4.000								
Engine	Information											
All engines	x 2, COIL ON PLUG, incl. spark plug connector									9.6342 C10		
				ENGINE								
1.2	Petrol	51	09/09->	169 A4.000								
Engine	Information											
All engines	x 1, D.I.S.									9.6323 C10		
All engines												4.7170

A10	CONDENSER	A20	CONTACT SET	A40	DISTRIBUTOR CAP	A50	ROTOR	A70	PICK-UP
C10	COIL	C20	IGNITION MODULE	C30	ELECTRONIC IGNITION KIT	E01	IGNITION CABLE SET		

The present application list is a brief version. For the detailed information about the possibility of installation on a specific vehicle, please refer to our web-catalogue http://catalogo.facet.eu/

Vehicle	alim.	kW	Date	Engine	FUNCTIONS ON THE VEHICLE A10	A20	A40	A50	A70	C10 - C30	C20	E01
1.4	Petrol	74	09/09->	169 A3.000								

Engine	Information	A10	A20	A40	A50	A70	C10 - C30		C20	E01
All engines	x 4, COIL ON PLUG, incl. spark plug connector						9.6342	C10		

1.4	Petrol	75	09/11->	169 A3.000, EAB

Engine	Information	A10	A20	A40	A50	A70	C10 - C30		C20	E01
Eng. 169 A3.000	x 4, COIL ON PLUG, incl. spark plug connector						9.6342	C10		
Eng. EAB	Qty: 4						9.6342	C10		

500 MY12

0.9	Petrol	48	01/12->	--

Engine	Information	A10	A20	A40	A50	A70	C10 - C30		C20	E01
All engines	naturally Asp. Eng., Qty: 2						9.6342	C10		

0.9	Petrol	62	01/12->	--

Engine	Information	A10	A20	A40	A50	A70	C10 - C30		C20	E01
All engines	naturally Asp. Eng., Qty: 2						9.6342	C10		

0.9	Petrol	77	01/12->	--

Engine	Information	A10	A20	A40	A50	A70	C10 - C30		C20	E01
All engines	naturally Asp. Eng., Qty: 2						9.6342	C10		

1.2	Petrol	51	01/12->	--

Engine	Information	A10	A20	A40	A50	A70	C10 - C30		C20	E01
All engines							9.6323	C10		4.7170

1.4	Petrol	74	01/12->	--

Engine	Information	A10	A20	A40	A50	A70	C10 - C30		C20	E01
All engines	Qty: 4						9.6342	C10		

500 MY15

0.9	Petrol	48	01/15->	--

Engine	Information	A10	A20	A40	A50	A70	C10 - C30		C20	E01
All engines	naturally Asp. Eng., Qty: 2						9.6342	C10		

0.9	Petrol	62	01/15->	--

Engine	Information	A10	A20	A40	A50	A70	C10 - C30		C20	E01
All engines	naturally Asp. Eng., Qty: 2						9.6342	C10		

0.9	Petrol	77	01/15->	--

Engine	Information	A10	A20	A40	A50	A70	C10 - C30		C20	E01
All engines	naturally Asp. Eng., Qty: 2						9.6342	C10		

1.2	Petrol	0	01/15->	--

Engine	Information	A10	A20	A40	A50	A70	C10 - C30		C20	E01
All engines							9.6323	C10		4.7170

1.2 LPG	Petrol	0	01/15->	--

Engine	Information	A10	A20	A40	A50	A70	C10 - C30		C20	E01
All engines							9.6323	C10		4.7170

1.4	Petrol	0	01/15->	--

Engine	Information	A10	A20	A40	A50	A70	C10 - C30		C20	E01
All engines	Qty: 4						9.6342	C10		

500L

1.4	Petrol	70	09/12->	843 A1.000

Engine	Information	A10	A20	A40	A50	A70	C10 - C30		C20	E01
All engines	x 4, COIL ON PLUG, incl. spark plug connector						9.6342	C10		

A10	CONDENSER	A20	CONTACT SET	A40	DISTRIBUTOR CAP	A50	ROTOR	A70	PICK-UP
C10	COIL	C20	IGNITION MODULE	C30	ELECTRONIC IGNITION KIT	E01	IGNITION CABLE SET		

The present application list is a brief version. For the detailed information about the possibility of installation on a specific vehicle, please refer to our web-catalogue http://catalogo.facet.eu/

Vehicle	alim.	kW	Date	Engine	FUNCTIONS ON THE VEHICLE							
					A10	A20	A40	A50	A70	C10 - C30	C20	E01

500X

				ENGINE
1.4	Petrol	100	09/14->	552 63 624

Engine	Information	A10	A20	A40	A50	A70	C10 - C30	C20	E01
All engines	x 4, COIL ON PLUG						9.6449 C10		

				ENGINE
1.4	Petrol	103	09/14->	552 63 624

Engine	Information	A10	A20	A40	A50	A70	C10 - C30	C20	E01
All engines	x 4, COIL ON PLUG						9.6449 C10		

				ENGINE
1.4 4x4	Petrol	120	02/15->	552 63 623

Engine	Information	A10	A20	A40	A50	A70	C10 - C30	C20	E01
All engines	x 4, version 1, COIL ON PLUG						9.6449 C10		

				ENGINE
1.4 LPG	Petrol/ Liquified Petro-leum Gas (LPG)	88	03/17->	552 77 701

Engine	Information	A10	A20	A40	A50	A70	C10 - C30	C20	E01
All engines	01/07/17 ->, x 4, COIL ON PLUG						9.6449 C10		

600

				ENGINE
0.6	Petrol	15	03/55-05/61	--

Engine	Information	A10	A20	A40	A50	A70	C10 - C30	C20	E01
All engines	version Marelli		1.4920		3.8229				
All engines							9.6001D C10		

850

				ENGINE
0.8	Petrol	25	07/64-10/72	100 G.000

Engine	Information	A10	A20	A40	A50	A70	C10 - C30	C20	E01
All engines	version Ducellier		1.3656	2.7649PHT	3.7683RS				
All engines	version Marelli		1.4932	2.8169	3.8237RS				
All engines					3.8237		9.6001D C10		

				ENGINE
0.8	Petrol	27	07/64-10/72	100 G.002

Engine	Information	A10	A20	A40	A50	A70	C10 - C30	C20	E01
All engines					3.8237				

				ENGINE
0.8 Special	Petrol	35	03/68-10/72	100 GB.000

Engine	Information	A10	A20	A40	A50	A70	C10 - C30	C20	E01
All engines					3.8237				

				ENGINE
0.9 Sport	Petrol	38	02/68-12/72	--, 100 GL.040

Engine	Information	A10	A20	A40	A50	A70	C10 - C30	C20	E01
All engines					3.8237				

ARGENTA

				ENGINE
1600	Petrol	72	04/81-12/85	132 D.000

Engine	Information	A10	A20	A40	A50	A70	C10 - C30	C20	E01
All engines	->year 01/05/82, version Marelli	0.0617	1.4942	2.8190	3.8242RS				
All engines	01/05/82 ->, version Marelli		1.4939		3.8241				
All engines							9.6001D C10		

				ENGINE
1600 i.e	Petrol	66	04/81-12/85	132 D.000

Engine	Information	A10	A20	A40	A50	A70	C10 - C30	C20	E01
All engines	->year 01/05/82, version Marelli	0.0617	1.4942	2.8190	3.8242RS				
All engines	01/05/82 ->, version Marelli		1.4939		3.8241				
All engines							9.6001D C10		

				ENGINE
2000	Petrol	83	06/78-12/85	132 D1.000

Engine	Information	A10	A20	A40	A50	A70	C10 - C30	C20	E01
All engines	version Bosch			2.7479PHT	3.7525RS				

A10	CONDENSER	A20	CONTACT SET	A40	DISTRIBUTOR CAP	A50	ROTOR	A70	PICK-UP
C10	COIL	C20	IGNITION MODULE	C30	ELECTRONIC IGNITION KIT	E01	IGNITION CABLE SET		

The present application list is a brief version. For the detailed information about the possibility of installation on a specific vehicle, please refer to our web-catalogue http://catalogo.facet.eu/

Vehicle	alim.	kW	Date	Engine	FUNCTIONS ON THE VEHICLE A10	A20	A40	A50	A70	C10 - C30	C20	E01
2000	Petrol	83	06/78-12/85	ENGINE 132 D1.000								
All engines	version Marelli						2.8182	3.8254RS				
All engines	+automatic transmission, version Marelli						2.8193	3.8237RS				
2000 i.e.	Petrol	90	06/81-07/86	ENGINE 132 C3.000								
All engines	version Marelli						2.8193	3.8254RS				
All engines										9.6003 C10		
BARCHETTA												
1.8 16V	Petrol	96	04/95-05/05	ENGINE 183 A1.000, 188 A6.000								
All engines	01/06/98 ->, x 4, COIL ON PLUG, x 4, COIL ON PLUG, incl. spark plug connector, incl. spark plug connector									9.6284 C10		
BRAVA												
1.2 16V	Petrol	64	12/98-12/02	ENGINE 182 B2.000								
All engines										9.6068 C10		4.9505
1.2 16V 80	Petrol	59	10/00-10/01	ENGINE 188 A5.000								
All engines	x 1, D.I.S., connector type, saw teeth									9.6068 C10		
All engines												4.9505
1.2 16V 80	Petrol	60	12/98-12/02	ENGINE 182 B2.000								
All engines	x 1, D.I.S., connector type, saw teeth									9.6068 C10		
All engines												4.9505
1.4	Petrol	55	10/95-10/01	ENGINE 182 A5.000								
All engines	x 1, D.I.S., connector type, saw teeth									9.6068 C10		
All engines												4.9363
1.4 12 V	Petrol	59	10/95-08/98	ENGINE 182 A3.000								
All engines	x 1, D.I.S., connector type, saw teeth									9.6068 C10		
All engines												4.9363
1.6 16V	Petrol	66	10/95-10/01	ENGINE 182 A6.000								
All engines	x 1, D.I.S., connector type, saw teeth									9.6245 C10		
All engines												4.9503
1.6 16V	Petrol	76	10/95-12/02	ENGINE 182 A4.000, 182 A4.027, 182 B6.000								
Eng. 182 A4.000, 182 B6.000	x 1, D.I.S., connector type, saw teeth									9.6245 C10		
Eng. 182 A4.027										9.6245 C10		
All engines												4.9503
BRAVO I												
1.2 16V 80	Petrol	59	10/00-10/01	ENGINE 188 A5.000								
All engines	x 1, D.I.S., connector type, saw teeth									9.6068 C10		
All engines												4.9505
1.2 16V 80	Petrol	60	12/98-10/00	ENGINE 182 B2.000								
All engines	x 1, D.I.S., connector type, saw teeth									9.6068 C10		

A10	CONDENSER	A20	CONTACT SET	A40	DISTRIBUTOR CAP	A50	ROTOR	A70	PICK-UP
C10	COIL	C20	IGNITION MODULE	C30	ELECTRONIC IGNITION KIT	E01	IGNITION CABLE SET		

The present application list is a brief version. For the detailed information about the possibility of installation on a specific vehicle, please refer to our web-catalogue http://catalogo.facet.eu/

Vehicle	alim.	kW	Date	Engine	FUNCTIONS ON THE VEHICLE A10	A20	A40	A50	A70	C10 - C30	C20	E01
1.2 16V 80	Petrol	60	12/98-10/00	ENGINE 182 B2.000								
Engine: All engines	Information:											4.9505
1.2 16V 80	Petrol	64	12/98-10/01	ENGINE 182 B2.000								
Engine: All engines	Information:									9.6068 C10		4.9505
1.4	Petrol	55	10/95-10/01	ENGINE 182 A5.000								
Engine: All engines	Information: x 1, D.I.S., connector type, saw teeth									9.6068 C10		
Engine: All engines	Information:											4.9363
1.4	Petrol	59	10/95-10/01	ENGINE 182 A3.000								
Engine: All engines	Information: x 1, D.I.S., connector type, saw teeth									9.6068 C10		
Engine: All engines	Information:											4.9363
1.6	Petrol	76	09/00-10/01	ENGINE 182 B6.000								
Engine: All engines	Information: x 1, D.I.S., connector type, saw teeth									9.6245 C10		
Engine: All engines	Information:											4.9503
1.6 16V	Petrol	66	10/95-10/01	ENGINE 182 A6.000								
Engine: All engines	Information: x 1, D.I.S., connector type, saw teeth									9.6245 C10		
Engine: All engines	Information:											4.9503
1.6 16V	Petrol	76	03/96-10/01	ENGINE 178 A8.011, 182 A4.000								
Engine: Eng. 178 A8.011	Information:									9.6245 C10		
Engine: Eng. 182 A4.000	Information: x 1, D.I.S., connector type, saw teeth									9.6245 C10		
Engine: All engines	Information:											4.9503
1.8 GT	Petrol	83	10/95-10/01	ENGINE 182 A2.000								
Engine: All engines	Information: 01/08/99 ->, ch. 4873622 ->, x 4, COIL ON PLUG, incl. spark plug connector									9.6284 C10		
2.0 HGT 20V	Petrol	108	10/95-07/98	ENGINE 182 A1.000								
Engine: All engines	Information: x 5, COIL ON PLUG, incl. spark plug connector									9.6214 C10		
BRAVO II												
1.4	Petrol	66	04/07-12/14	ENGINE 192 B2.000								
Engine: All engines	Information: x 4, COIL ON PLUG, incl. spark plug connector									9.6342 C10		
1.4 16V	Petrol	103	01/10->	ENGINE --, 198 A7.000								
Engine: Eng. --	Information: Qty: 4									9.6449 C10		
Engine: Eng. 198 A7.000	Information: x 4, COIL ON PLUG									9.6449 C10		
1.4 16V	Petrol	70	04/07->	ENGINE --								
Engine: All engines	Information: naturally Asp. Eng., Qty: 4									9.6342 C10		
Engine: All engines	Information: turbo/Interc., Qty: 4									9.6449 C10		
1.4 LPG	Petrol	66	01/10->	ENGINE --								
Engine: All engines	Information: Qty: 4									9.6342 C10		

A10	CONDENSER	A20	CONTACT SET	A40	DISTRIBUTOR CAP	A50	ROTOR	A70	PICK-UP
C10	COIL	C20	IGNITION MODULE	C30	ELECTRONIC IGNITION KIT	E01	IGNITION CABLE SET		

The present application list is a brief version. For the detailed information about the possibility of installation on a specific vehicle, please refer to our web-catalogue http://catalogo.facet.eu/

Vehicle	alim.	kW	Date	Engine	FUNCTIONS ON THE VEHICLE A10	A20	A40	A50	A70	C10 - C30	C20	E01
1.4 LPG	Petrol	66	01/10->	--								

Engine	Information	A10	A20	A40	A50	A70	C10 - C30		C20	E01
All engines	x 4, COIL ON PLUG, incl. spark plug connector						9.6342	C10		

1.4 T-Jet	Petrol	110	09/07-12/14	198 A1.000								

Engine	Information	A10	A20	A40	A50	A70	C10 - C30		C20	E01
All engines	naturally Asp. Eng., Qty: 4						9.6342	C10		

1.4 T-Jet	Petrol	88	10/07-12/14	198 A4.000								

Engine	Information	A10	A20	A40	A50	A70	C10 - C30		C20	E01
All engines	naturally Asp. Eng., Qty: 4						9.6342	C10		
All engines	x 4, COIL ON PLUG, incl. spark plug connector						9.6342	C10		

CINQUECENTO

0.7	Petrol	23	12/91-01/96	170 A.000								

Engine	Information	A10	A20	A40	A50	A70	C10 - C30		C20	E01
All engines							9.6046	C10		

0.7 i	Petrol	22	07/94-01/98	170 A.046								

Engine	Information	A10	A20	A40	A50	A70	C10 - C30		C20	E01
All engines							9.6046	C10		

0.9	Petrol	30	07/91-12/93	170 A1.000								

Engine	Information	A10	A20	A40	A50	A70	C10 - C30		C20	E01
All engines	Qty: 2						9.6046	C10		
All engines										4.8615

0.9 i.e.	Petrol	30	07/91-09/94	170 A1.046								

Engine	Information	A10	A20	A40	A50	A70	C10 - C30		C20	E01
All engines	Qty: 2						9.6046	C10		
All engines										4.8615

0.9 i.e. S	Petrol	29	07/91-07/99	1170 A1.000, 1170 A1.046								

Engine	Information	A10	A20	A40	A50	A70	C10 - C30		C20	E01
All engines	Qty: 2						9.6046	C10		
All engines										4.8615

1.1 Sporting	Petrol	40	10/94-01/98	176 B2.000								

Engine	Information	A10	A20	A40	A50	A70	C10 - C30		C20	E01
All engines	Qty: 2						9.6046	C10		
All engines										4.8616

COUPE

1.8 16V	Petrol	96	03/96-08/00	183 A1.000								

Engine	Information	A10	A20	A40	A50	A70	C10 - C30		C20	E01
All engines	01/05/98 ->, Qty: 4						9.6284	C10		

2.0 16V	Petrol	102	11/93-08/96	836 A3.000								

Engine	Information	A10	A20	A40	A50	A70	C10 - C30		C20	E01
All engines	version Marelli			2.8214PHT	3.8260	8.4977/1				
All engines							9.8003	C30		4.8650

2.0 16V [BRA]	Petrol	102	11/93-08/96	836 A3.011								

Engine	Information	A10	A20	A40	A50	A70	C10 - C30		C20	E01
All engines	version Marelli			2.8214PHT	3.8260	8.4977/1				
All engines							9.8003	C30		4.8650

2.0 16V Turbo	Petrol	140	11/93-08/96	175 A1.000								

Engine	Information	A10	A20	A40	A50	A70	C10 - C30		C20	E01
All engines	Qty: 2						9.6046	C10		

A10	CONDENSER	A20	CONTACT SET	A40	DISTRIBUTOR CAP	A50	ROTOR	A70	PICK-UP
C10	COIL	C20	IGNITION MODULE	C30	ELECTRONIC IGNITION KIT	E01	IGNITION CABLE SET		

The present application list is a brief version. For the detailed information about the possibility of installation on a specific vehicle, please refer to our web-catalogue http://catalogo.facet.eu/

Vehicle	alim.	kW	Date	Engine	FUNCTIONS ON THE VEHICLE A10	A20	A40	A50	A70	C10 - C30	C20	E01
2.0 16V Turbo	Petrol	140	11/93-08/96	ENGINE 175 A1.000								
Engine	Information											4.8456
All engines												
2.0 20V	Petrol	108	08/96-09/98	ENGINE 182 A1.000								
Engine	Information											
All engines	Qty: 5									9.6214 C10		
2.0 20V Turbo	Petrol	162	08/96-08/00	ENGINE 175 A3.000								
Engine	Information											
All engines	Qty: 5									9.6214 C10		

CROMA I

1600	Petrol	61	12/85-12/90	ENGINE 154 A.048								
Engine	Information											
All engines	eng. type 1125932 ->, version Marelli						2.8198PHT					
All engines	->eng. 1125932, version Marelli						2.8204PHT					
All engines	version Marelli							3.8255RS				
All engines										9.6003 C10		
2000 16V	Petrol	101	08/92-08/96	ENGINE 154 E1.000								
Engine	Information											
All engines										9.6068 C10		4.8700
2000 CHT	Petrol	66	12/85-02/89	ENGINE 154 A1.000								
Engine	Information											
All engines	version Marelli						2.8198PHT					
All engines	->ch. 0145533, version Marelli							3.8247RS				
All engines	->eng. 1129540, ch. 0145534 ->, version Marelli							3.8255RS				
All engines	eng. type 1129540 ->, version Marelli							3.8259				
All engines	01/01/89 ->									9.6002 C10		
All engines	->year 01/01/89									9.6003 C10		
2000 CHT	Petrol	74	01/91-09/92	ENGINE 154 A1.000, 154 C5.000								
Engine	Information											
All engines	version Marelli						2.8198PHT					
All engines	->ch. 0145533, version Marelli							3.8247RS				
All engines	->eng. 1129540, ch. 0145534 ->, version Marelli							3.8255RS				
All engines	eng. type 1129540 ->, version Marelli							3.8259				
All engines										9.6048 C10		4.8398
2000 i.e.	Petrol	83	03/86-09/90	ENGINE 834 B.048								
Engine	Information											
All engines	version Marelli						2.8198PHT					
All engines	->eng. 957159, version Marelli							3.8257RS				
All engines	eng. type 957159 ->, version Marelli							3.8260				
All engines									8.4977/1			4.8398
2000 i.e.	Petrol	85	10/87-08/96	ENGINE 154 C3.046, 834 B.146								
Engine	Information											
All engines	version Marelli						2.8215PHT					
All engines	FOR: (CSI), Country Version:Algeria, version Marelli							3.8259				
All engines										9.6048 C10		4.8398
2000 i.e.	Petrol	86	05/91-12/96	ENGINE 154 C3.000								
Engine	Information											
All engines	version Marelli						2.8215PHT					
All engines	FOR: (CSI), Country Version:Algeria, version Marelli							3.8259				
All engines										9.6048 C10		4.8398

A10	CONDENSER	A20	CONTACT SET	A40	DISTRIBUTOR CAP	A50	ROTOR	A70	PICK-UP
C10	COIL	C20	IGNITION MODULE	C30	ELECTRONIC IGNITION KIT	E01	IGNITION CABLE SET		

The present application list is a brief version. For the detailed information about the possibility of installation on a specific vehicle, please refer to our web-catalogue http://catalogo.facet.eu/

Vehicle	alim.	kW	Date	Engine	FUNCTIONS ON THE VEHICLE A10	A20	A40	A50	A70	C10 - C30	C20	E01
2000 i.e.	Petrol	88	03/87-09/92	**154 C3.000, 834 B.000**								
Engine	Information											
All engines	version Marelli			2.8215PHT								
All engines	->eng. 957159, version Marelli				3.8257RS							
All engines	eng. type 957159 ->, version Marelli				3.8260							
All engines						8.4977/1	9.8003	C30				
2000 i.e. 16V	Petrol	101	03/95-12/96	**154 E1.027**								
Engine	Information											
All engines							9.6068	C10				4.8700
2000 i.e. Turbo	Petrol	110	06/87-08/96	**154 C4.046, 834 C.146**								
Engine	Information											
All engines	version Marelli			2.8215PHT	3.8259							
All engines							9.8003	C30				4.8398
2000 i.e. Turbo	Petrol	111	11/86-11/88	**834 C.146**								
Engine	Information											
All engines	version Marelli			2.8215PHT	3.8259							
All engines							9.8003	C30				4.8398
2000 i.e. Turbo	Petrol	114	12/85-06/90	**154 A2.000**								
Engine	Information											
All engines	version Marelli			2.8198PHT								
All engines	->eng. 1129191, version Marelli				3.8255RS							
All engines	eng. type 1129191 ->, version Marelli				3.8259							
All engines												4.8398
2000 i.e. Turbo	Petrol	116	03/91-10/94	**154 C4.000**								
Engine	Information											
All engines	version Marelli			2.8215PHT	3.8259							
All engines							9.8003	C30				4.8398
CROMA II												
1.8 16V	Petrol	103	12/05->	**939 A4.000**								
Engine	Information											
All engines	x 4, COIL ON PLUG									9.6350	C10	
DOBLO I												
1.2	Petrol	48	03/01->	**223 A5.000**								
Engine	Information											
All engines	x 1, D.I.S., connector type DIN									9.6046	C10	
All engines												4.9451
1.4	Petrol	57	10/05->	**350 A1.000**								
Engine	Information											
All engines	x 1, D.I.S.									9.6323	C10	
All engines												4.7170
1.6 Natural Power	Petrol/ Compressed Natural Gas (CNG)	68	02/04-07/09	**182B6000CNG**								
Engine	Information											
All engines	x 1, D.I.S., connector type, saw teeth									9.6245	C10	

A10	CONDENSER	**A20**	CONTACT SET	**A40**	DISTRIBUTOR CAP	**A50**	ROTOR	**A70**	PICK-UP
C10	COIL	**C20**	IGNITION MODULE	**C30**	ELECTRONIC IGNITION KIT	**E01**	IGNITION CABLE SET		

The present application list is a brief version. For the detailed information about the possibility of installation on a specific vehicle, please refer to our web-catalogue http://catalogo.facet.eu/

Vehicle	alim.	kW	Date	Engine	FUNCTIONS ON THE VEHICLE: A10	A20	A40	A50	A70	C10 - C30	C20	E01
1.6 Natural Power	Petrol/ Com-pressed Natural Gas (CNG)	76	09/02->	**182 B6.000, 182B6000CNG**								

Engine	Information	A10	A20	A40	A50	A70	C10 - C30	C20	E01
Eng. 182 B6.000							9.6245 C10		4.9503
Eng. 182B6000CNG	x 1, D.I.S., connector type, saw teeth						9.6245 C10		

DOBLO II

				ENGINE
1.4	Petrol	70	02/10->	**843 A1.000**

Engine	Information	A10	A20	A40	A50	A70	C10 - C30	C20	E01
All engines	x 4, COIL ON PLUG, incl. spark plug connector						9.6342 C10		

				ENGINE
1.4 Natural Power	Petrol/ Com-pressed Natural Gas (CNG)	88	06/10->	**198A4000CNG**

Engine	Information	A10	A20	A40	A50	A70	C10 - C30	C20	E01
All engines	x 4, COIL ON PLUG, incl. spark plug connector						9.6342 C10		

DUCATO I

				ENGINE
1.8	Petrol	49	01/82-10/88	**169 B**

Engine	Information	A10	A20	A40	A50	A70	C10 - C30	C20	E01
All engines	version Ducellier	0.0334	1.3691/5	2.7654PHT	3.7691				
All engines	version Marelli		1.4939						
All engines	version Bosch			2.7479PHT	3.7525RS				
All engines	no specific info conc. application available						9.6001D C10		
All engines								9.4005	

				ENGINE
1.8	Petrol	51	07/82-12/88	**XM7T**

Engine	Information	A10	A20	A40	A50	A70	C10 - C30	C20	E01
All engines	version Ducellier	0.0334	1.3691/5	2.7654PHT	3.7691				
All engines	version Marelli		1.4939						
All engines	version Bosch			2.7479PHT	3.7525RS				
All engines	no specific info conc. application available						9.6001D C10		
All engines								9.4005	

				ENGINE
2.0	Petrol	55	07/85-02/94	**170 B, XN 1T**

Engine	Information	A10	A20	A40	A50	A70	C10 - C30	C20	E01
All engines	version Ducellier			2.7654PHT	3.7694				
All engines								9.4005	

				ENGINE
2.0	Petrol	58	01/82-08/90	**XN 1T**

Engine	Information	A10	A20	A40	A50	A70	C10 - C30	C20	E01
All engines	version Ducellier			2.7654PHT	3.7694				
All engines								9.4005	

				ENGINE
2.0	Petrol	62	07/90-03/94	**170 D**

Engine	Information	A10	A20	A40	A50	A70	C10 - C30	C20	E01
All engines	version Ducellier			2.7658PHT	3.7696RS				
All engines								9.4005	

				ENGINE
2.0	Petrol	63	06/90-05/94	**170 D, 170C (XN1T)**

Engine	Information	A10	A20	A40	A50	A70	C10 - C30	C20	E01
All engines	version Ducellier			2.7654PHT	3.7694				
All engines								9.4005	

				ENGINE
2.0 4x4	Petrol	63	06/90-05/94	**170 D**

Engine	Information	A10	A20	A40	A50	A70	C10 - C30	C20	E01
All engines	version Ducellier			2.7654PHT	3.7694				
All engines								9.4005	

A10	CONDENSER	**A20**	CONTACT SET	**A40**	DISTRIBUTOR CAP	**A50**	ROTOR	**A70**	PICK-UP
C10	COIL	**C20**	IGNITION MODULE	**C30**	ELECTRONIC IGNITION KIT	**E01**	IGNITION CABLE SET		

The present application list is a brief version. For the detailed information about the possibility of installation on a specific vehicle, please refer to our web-catalogue http://catalogo.facet.eu/

Vehicle	alim.	kW	Date	Engine	FUNCTIONS ON THE VEHICLE A10	A20	A40	A50	A70	C10 - C30	C20	E01
DUCATO II												
2.0	Petrol	74	06/94-12/95	--								
All engines			Kit, version Ducellier				2.7687					
All engines			version Ducellier						8.3619			
2.0	Petrol	80	03/94-04/02	**RFW**								
All engines										9.6088 C10		4.8674
2.0	Petrol	81	04/02->	**RFL, RFL (XU10J2U)**								
Eng. RFL			Ducato 11, Ducato 15, x 1, PEUGEOT, D.I.S., connector type, saw teeth							9.6088 C10		
Eng. RFL (XU10J2U)												4.8674
2.0 4x4	Petrol	80	11/94-04/02	**RFW**								
All engines										9.6088 C10		4.8674
2.0 4x4	Petrol	81	05/02-07/06	**RFL, RFL (XU10J2U)**								
Eng. RFL			Ducato 11, Ducato 15, x 1, PEUGEOT, D.I.S., connector type, saw teeth							9.6088 C10		
Eng. RFL (XU10J2U)												4.8674
2.0 Bipower	Petrol/ Compressed Natural Gas (CNG)	81	11/02->	**RFL, RFL (XU10J2U)**								
Eng. RFL			Ducato 15, x 1, PEUGEOT, D.I.S., connector type, saw teeth							9.6088 C10		
Eng. RFL (XU10J2U)												4.8674
2.0 LPG	Petrol/ Liquified Petroleum Gas (LPG)	71	11/02-07/06	**RFL**								
All engines			Ducato 15, x 1, PEUGEOT, D.I.S., connector type, saw teeth							9.6088 C10		
2.0 Panorama/Combinato	Petrol	80	03/94-04/02	**RFW**								
All engines										9.6088 C10		4.8674
DUCATO III												
140 Natural Power	CNG	100	04/09->	**F1CE0441A, F1CFA401A, F1CFA401C**								
All engines			Ducato 35, x 4, COIL ON PLUG							9.6342 C10		
DUNA												
60 1.1	Petrol	43	01/87-12/91	**146 A6.000**								
All engines			version Marelli				2.8201PHT	3.8247RS	8.4976M			
All engines										9.6058 C10	9.4020	
70 1.3	Petrol	49	01/87-12/91	**146 A5.000**								
All engines			version Marelli				2.8201PHT	3.8247RS	8.4976M			
All engines										9.6058 C10	9.4020	

A10	CONDENSER	**A20**	CONTACT SET	**A40**	DISTRIBUTOR CAP	**A50**	ROTOR	**A70**	PICK-UP
C10	COIL	**C20**	IGNITION MODULE	**C30**	ELECTRONIC IGNITION KIT	**E01**	IGNITION CABLE SET		

The present application list is a brief version. For the detailed information about the possibility of installation on a specific vehicle, please refer to our web-catalogue http://catalogo.facet.eu/

ELBA

Vehicle	alim.	kW	Date	Engine
1.3	Petrol	49	04/91-02/95	146 A5.000

Engine	Information	A10	A20	A40	A50	A70	C10 - C30		C20	E01
All engines	version Marelli			2.8201PHT		8.4976M				
All engines	no specific info conc. application available, version Marelli				3.8247RS, 3.8260					
All engines							9.6058	C10	9.4020	

Vehicle	alim.	kW	Date	Engine
1.4	Petrol	49	10/93-02/95	146 D5.000

Engine	Information	A10	A20	A40	A50	A70	C10 - C30		C20	E01
All engines							9.6088	C10		4.8655

Vehicle	alim.	kW	Date	Engine
1.5	Petrol	49	01/92-12/96	149 C1.000

Engine	Information	A10	A20	A40	A50	A70	C10 - C30		C20	E01
All engines	->year 31/05/93, version Marelli			2.8204PHT						
All engines	01/06/93 ->, version Marelli			2.8214PHT						
All engines	version Marelli				3.8259					
All engines							9.6048	C10		

Vehicle	alim.	kW	Date	Engine
1.5	Petrol	55	01/92-12/96	149 C1.000

Engine	Information	A10	A20	A40	A50	A70	C10 - C30		C20	E01
All engines	->year 31/05/93, version Marelli			2.8204PHT						
All engines	01/06/93 ->, version Marelli			2.8214PHT						
All engines	version Marelli				3.8259					
All engines							9.6048	C10		

FIORINO I

Vehicle	alim.	kW	Date	Engine
1.0	Petrol	37	01/80-12/87	127 A.000

Engine	Information	A10	A20	A40	A50	A70	C10 - C30		C20	E01
All engines	version Marelli	0.0617	1.4942	2.8190	3.8242RS					
All engines							9.6001D	C10		

Vehicle	alim.	kW	Date	Engine
1.1 60	Petrol	40	11/86-04/88	146 A9.000

Engine	Information	A10	A20	A40	A50	A70	C10 - C30		C20	E01
All engines	version Marelli			2.8201PHT		8.4976M				
All engines	->eng. 3854060, version Marelli				3.8247RS					
All engines	eng. type 3854060 ->, version Marelli				3.8260					
All engines							9.6058	C10	9.4020	

Vehicle	alim.	kW	Date	Engine
1.3	Petrol	49	12/87-08/93	146 A5.000

Engine	Information	A10	A20	A40	A50	A70	C10 - C30		C20	E01
All engines	version Marelli			2.8201PHT		8.4976M				
All engines	->eng. 03854060, version Marelli				3.8247RS					
All engines	eng. type 03854060 ->, version Marelli				3.8260					
All engines							9.6058	C10	9.4020	

Vehicle	alim.	kW	Date	Engine
1.5	Petrol	55	01/88-08/93	149 C1.000

Engine	Information	A10	A20	A40	A50	A70	C10 - C30		C20	E01
All engines	->year 01/05/93, version Marelli			2.8204PHT						
All engines	01/05/93 ->, version Marelli			2.8214PHT						
All engines	->year 01/05/90, version Marelli				3.8255RS					
All engines	01/05/90 ->, version Marelli				3.8259					
All engines	VET. 8098787, 8150978 ->						9.6002	C10		
All engines	->VET. 8098787, 8150978						9.6003	C10		

Vehicle	alim.	kW	Date	Engine
1050	Petrol	37	01/80-12/87	127 A.000

Engine	Information	A10	A20	A40	A50	A70	C10 - C30		C20	E01
All engines	version Marelli	0.0617	1.4942	2.8190	3.8242RS					
All engines							9.6001D	C10		

A10	CONDENSER	A20	CONTACT SET	A40	DISTRIBUTOR CAP	A50	ROTOR	A70	PICK-UP
C10	COIL	C20	IGNITION MODULE	C30	ELECTRONIC IGNITION KIT	E01	IGNITION CABLE SET		

The present application list is a brief version. For the detailed information about the possibility of installation on a specific vehicle, please refer to our web-catalogue http://catalogo.facet.eu/

Vehicle	alim.	kW	Date	Engine	FUNCTIONS ON THE VEHICLE A10	A20	A40	A50	A70	C10 - C30	C20	E01
900	Petrol	33	10/77-10/86	ENGINE 100 GL.000								
Engine	Information	A10	A20	A40	A50	A70	C10 - C30		C20	E01		
All engines	version Ducellier	0.0323	1.3656HDV	2.7645	3.7683RS							
All engines	version Marelli	0.0617	1.4942		3.8242RS							
All engines	01/01/82 ->, version Marelli			2.8190								
All engines							9.6001D	C10				
FIORINO II												
1.0 iE	Petrol	33	11/92-04/96	ENGINE 156 A2.246								
Engine	Information	A10	A20	A40	A50	A70	C10 - C30		C20	E01		
All engines	version Marelli			2.8209PHT	3.8260	8.4980M						
All engines							9.6008	C10	9.4020	4.8347		
1.3	Petrol	49	01/88-12/94	ENGINE 146 A5.000								
Engine	Information	A10	A20	A40	A50	A70	C10 - C30		C20	E01		
All engines	version Marelli			2.8201PHT		8.4976M						
All engines	->eng. 03854060, version Marelli				3.8247RS							
All engines	eng. type 03854060 ->, version Marelli				3.8260							
All engines							9.6058	C10	9.4020			
1.4	Petrol	49	05/94-05/01	ENGINE 146 D5.000								
Engine	Information	A10	A20	A40	A50	A70	C10 - C30		C20	E01		
All engines							9.6068	C10		4.8655		
1.4	Petrol	52	11/92-10/96	ENGINE 146 C5.000								
Engine	Information	A10	A20	A40	A50	A70	C10 - C30		C20	E01		
All engines							9.6068	C10		4.8655		
1.5 iE	Petrol	55	01/88-10/92	ENGINE 149 C1.000								
Engine	Information	A10	A20	A40	A50	A70	C10 - C30		C20	E01		
All engines	->year 01/05/93, version Marelli			2.8204PHT								
All engines	01/05/93 ->, version Marelli			2.8214PHT								
All engines	->year 01/05/90, version Marelli				3.8255RS							
All engines	01/05/90 ->, version Marelli				3.8259							
All engines	VET. 8098787, 8150978 ->						9.6002	C10				
All engines	->VET. 8098787, 8150978						9.6003	C10				
1.6	Petrol	55	01/94-05/01	ENGINE 146 C6.000, 146 D6.000								
Engine	Information	A10	A20	A40	A50	A70	C10 - C30		C20	E01		
Eng. 146 C6.000	version Marelli			2.8215PHT	3.8259	8.4977/1						
Eng. 146 C6.000							9.6048	C10				
Eng. 146 D6.000							9.6068	C10		4.8655		
60 1.1	Petrol	40	05/88-12/93	ENGINE 146 A9.000								
Engine	Information	A10	A20	A40	A50	A70	C10 - C30		C20	E01		
All engines	version Marelli			2.8201PHT		8.4976M						
All engines	->eng. 3854060, version Marelli				3.8247RS							
All engines	eng. type 3854060 ->, version Marelli				3.8260							
All engines							9.6058	C10	9.4020			
70 1.3	Petrol	49	01/88-12/94	ENGINE 146 A5.000								
Engine	Information	A10	A20	A40	A50	A70	C10 - C30		C20	E01		
All engines	version Marelli			2.8201PHT		8.4976M						
All engines	->eng. 03854060, version Marelli				3.8247RS							
All engines	eng. type 03854060 ->, version Marelli				3.8260							
All engines							9.6058	C10	9.4020			
70 i.e. 1.4	Petrol	49	05/94-05/01	ENGINE 146 C5.000, 146 D5.000								
Engine	Information	A10	A20	A40	A50	A70	C10 - C30		C20	E01		
Eng. 146 C5.000	version Marelli			2.8214PHT	3.8259							
Eng. 146 C5.000							9.6048	C10				

A10	CONDENSER	A20	CONTACT SET	A40	DISTRIBUTOR CAP	A50	ROTOR	A70	PICK-UP
C10	COIL	C20	IGNITION MODULE	C30	ELECTRONIC IGNITION KIT	E01	IGNITION CABLE SET		

The present application list is a brief version. For the detailed information about the possibility of installation on a specific vehicle, please refer to our web-catalogue http://catalogo.facet.eu/

Vehicle	alim.	kW	Date	Engine	FUNCTIONS ON THE VEHICLE A10	A20	A40	A50	A70	C10 - C30	C20	E01
70 i.e. 1.4	Petrol	49	05/94-05/01	ENGINE 146 C5.000, 146 D5.000								

Engine	Information	A10	A20	A40	A50	A70	C10 - C30		C20	E01
Eng. 146 D5.000							9.6068	C10		4.8655

75 i.e. 1.5	Petrol	55	05/88-12/93	ENGINE 149 C1.000								

Engine	Information	A10	A20	A40	A50	A70	C10 - C30		C20	E01
All engines	->year 01/05/93, version Marelli			2.8204PHT						
All engines	01/05/93 ->, version Marelli			2.8214PHT						
All engines	->year 01/05/90, version Marelli				3.8255RS					
All engines	01/05/90 ->, version Marelli				3.8259					
All engines	VET. 8098787, 8150978 ->						9.6002	C10		
All engines	->VET. 8098787, 8150978						9.6003	C10		

75 i.e. 1.6	Petrol	55	10/93-05/01	ENGINE 146 C6.000, 146 D6.000								

Engine	Information	A10	A20	A40	A50	A70	C10 - C30		C20	E01
Eng. 146 C6.000	version Marelli			2.8215PHT	3.8259	8.4977/1				
Eng. 146 C6.000							9.6048	C10		
Eng. 146 D6.000							9.6068	C10		4.8655

FIORINO III

1.4	Petrol	54	11/07->	ENGINE KFT, KFV								

Engine	Information	A10	A20	A40	A50	A70	C10 - C30		C20	E01
All engines	x 4, COIL ON PLUG						9.6305	C10		
All engines	01/01/16 ->									4.7170

1.4	Petrol	57	10/09->	ENGINE 350 A1.000								

Engine	Information	A10	A20	A40	A50	A70	C10 - C30		C20	E01
All engines	x 1, D.I.S.						9.6323	C10		
All engines	01/01/16 ->									4.7170

1.4 CNG	Petrol/ Compressed Natural Gas (CNG)	51	07/14->	ENGINE 350A1000CNG								

Engine	Information	A10	A20	A40	A50	A70	C10 - C30		C20	E01
All engines	x 1, D.I.S.						9.6323	C10		

1.4 CNG	Petrol/ Compressed Natural Gas (CNG)	57	06/08->	ENGINE 350A1000CNG								

Engine	Information	A10	A20	A40	A50	A70	C10 - C30		C20	E01
All engines	x 1, D.I.S.						9.6323	C10		

1.4 Natural Power	Petrol/ Compressed Natural Gas (CNG)	51	06/08->	ENGINE 350A1000CNG								

Engine	Information	A10	A20	A40	A50	A70	C10 - C30		C20	E01
All engines	x 1, D.I.S.						9.6323	C10		

1.4 Natural Power	Petrol/ Compressed Natural Gas (CNG)	57	06/08->	ENGINE 350 A1.000, 350A1000C-NG								

Engine	Information	A10	A20	A40	A50	A70	C10 - C30		C20	E01
Eng. 350 A1.000							9.6323	C10		4.7170
Eng. 350A1000CNG	x 1, D.I.S.						9.6323	C10		

A10	CONDENSER	A20	CONTACT SET	A40	DISTRIBUTOR CAP	A50	ROTOR	A70	PICK-UP
C10	COIL	C20	IGNITION MODULE	C30	ELECTRONIC IGNITION KIT	E01	IGNITION CABLE SET		

The present application list is a brief version. For the detailed information about the possibility of installation on a specific vehicle, please refer to our web-catalogue http://catalogo.facet.eu/

Vehicle	alim.	kW	Date	Engine	FUNCTIONS ON THE VEHICLE A10	A20	A40	A50	A70	C10 - C30	C20	E01
GRANDE PUNTO												
1.4	Petrol	57	02/06-06/13	**350 A1.000**								
All engines			x 1, D.I.S.							9.6323	C10		
1.4 LPG	Petrol/ Liquified Petro-leum Gas (LPG)	57	03/09-12/12	**350 A1.000**								
All engines			x 1, D.I.S.							9.6323	C10		
1.4 Natural Power	Petrol/ Com-pressed Natural Gas (CNG)	57	03/09-12/12	**350A1000CNG**								
All engines			x 1, D.I.S.							9.6323	C10		
IDEA												
1.2	Petrol	59	01/08->	--								
All engines			Qty: 4							9.6342	C10		
1.2 16V	Petrol	59	01/04->	**188 A5.000**								
All engines			x 4, COIL ON PLUG, incl. spark plug connector							9.6342	C10		
1.4	Petrol	57	10/05->	**350 A1.000**								
All engines			x 1, D.I.S.							9.6323	C10		
All engines												4.7170
1.4	Petrol	66	12/03->	**192 B2.000**								
All engines			x 4, COIL ON PLUG, incl. spark plug connector							9.6342	C10		
1.4	Petrol	70	10/04-12/12	**843 A1.000**								
All engines			x 4, COIL ON PLUG, incl. spark plug connector							9.6342	C10		
1.4 16V	Petrol	59	08/10->	--								
All engines			Qty: 4							9.6342	C10		
1.4 16V	Petrol	70	01/04->	**843 A1.000**								
All engines			x 4, COIL ON PLUG, incl. spark plug connector							9.6342	C10		
1.4 LPG	Petrol/ Liquified Petro-leum Gas (LPG)	57	03/09->	**350 A1.000**								
All engines			x 1, D.I.S.							9.6323	C10		
LINEA												
1.4	Petrol	57	06/07->	**350 A1.000**								
All engines			x 1, D.I.S.							9.6323	C10		
All engines												4.7170

A10	CONDENSER	**A20**	CONTACT SET	**A40**	DISTRIBUTOR CAP	**A50**	ROTOR	**A70**	PICK-UP
C10	COIL	**C20**	IGNITION MODULE	**C30**	ELECTRONIC IGNITION KIT	**E01**	IGNITION CABLE SET		

The present application list is a brief version. For the detailed information about the possibility of installation on a specific vehicle, please refer to our web-catalogue http://catalogo.facet.eu/

Vehicle	alim.	kW	Date	Engine	FUNCTIONS ON THE VEHICLE A10	A20	A40	A50	A70	C10 - C30	C20	E01
1.4 16V [IND]	Petrol	70	06/07->	ENGINE --								
Engine: All engines	Information: Qty: 4									9.6342 C10		
1.4 T-Jet	Petrol	88	05/07->	ENGINE 198 A4.000								
Engine: All engines	Information: MADE BY: (IND), x 4, COIL ON PLUG, incl. spark plug connector									9.6342 C10		
MAREA												
1.2 16V	Petrol	60	10/98-05/02	ENGINE 182 B2.000								
Engine: All engines	Information: x 1, D.I.S., connector type, saw teeth									9.6068 C10		
All engines												4.9505
1.4 80 12V	Petrol	59	09/96-05/02	ENGINE 182 A3.000								
Engine: All engines	Information: x 1, D.I.S., connector type, saw teeth									9.6068 C10		
All engines												4.9363
1.6	Petrol	68	03/99-08/00	ENGINE 185 A3.000								
Engine: All engines	Information: x 1, D.I.S., connector type, saw teeth									9.6245 C10		
All engines												4.9503
1.6	Petrol	76	09/00-08/02	ENGINE 182 B6.000								
Engine: All engines	Information: x 1, D.I.S., connector type, saw teeth									9.6245 C10		
All engines												4.9503
1.6 100 16V	Petrol	76	09/96-05/02	ENGINE 182 A4.000								
Engine: All engines	Information: x 1, D.I.S., connector type, saw teeth									9.6245 C10		
All engines												4.9503
1.6 100 16V Bipower	Petrol/ Compressed Natural Gas (CNG)	76	04/99-05/02	ENGINE 182 A4.000, 185 A3.000								
Engine: Eng. 185 A3.000	Information:									9.6245 C10		4.9503
Eng. 182 A4.000	x 1, D.I.S., connector type, saw teeth									9.6245 C10		
1.6 16V	Petrol	75	04/97-02/99	ENGINE 185 A3.000								
Engine: All engines	Information: x 1, D.I.S., connector type, saw teeth									9.6245 C10		
All engines												4.9503
1.6 SX	Petrol	72	09/00-08/02	ENGINE 182 B5.098								
Engine: All engines	Information: x 1, D.I.S., connector type, saw teeth									9.6245 C10		
All engines												4.9503
2.0 150 20V	Petrol	108	09/96-04/99	ENGINE 182 A1.000								
Engine: All engines	Information: x 5, COIL ON PLUG, incl. spark plug connector									9.6214 C10		
2.0i 20v [BRA]	Petrol	108	10/96-04/99	ENGINE 182 A1.011								
Engine: All engines	Information: Qty: 5									9.6214 C10		

A10	CONDENSER	A20	CONTACT SET	A40	DISTRIBUTOR CAP	A50	ROTOR	A70	PICK-UP
C10	COIL	C20	IGNITION MODULE	C30	ELECTRONIC IGNITION KIT	E01	IGNITION CABLE SET		

The present application list is a brief version. For the detailed information about the possibility of installation on a specific vehicle, please refer to our web-catalogue http://catalogo.facet.eu/

Vehicle	alim.	kW	Date	Engine	FUNCTIONS ON THE VEHICLE A10	A20	A40	A50	A70	C10 - C30	C20	E01

MULTIPLA

				ENGINE
1.6	Petrol	68	05/04-08/05	182 B6.000

Engine	Information	A10	A20	A40	A50	A70	C10 - C30		C20	E01
All engines	x 1, D.I.S., connector type, saw teeth						9.6245	C10		
All engines										4.9503

				ENGINE
1.6	Petrol	74	03/01-08/05	182 B6.000

Engine	Information	A10	A20	A40	A50	A70	C10 - C30		C20	E01
All engines							9.6245	C10		4.9503

				ENGINE
1.6	Petrol	76	09/00-06/10	182 B6.000

Engine	Information	A10	A20	A40	A50	A70	C10 - C30		C20	E01
All engines	x 1, D.I.S., connector type, saw teeth						9.6245	C10		
All engines										4.9503

				ENGINE
1.6 100 16V	Petrol	76	04/99-06/10	182 A4.000

Engine	Information	A10	A20	A40	A50	A70	C10 - C30		C20	E01
All engines	x 1, D.I.S., connector type, saw teeth						9.6245	C10		
All engines										4.9503

				ENGINE
1.6 16V	Petrol	70	04/02-06/10	182 B6.000

Engine	Information	A10	A20	A40	A50	A70	C10 - C30		C20	E01
All engines	x 1, D.I.S., connector type, saw teeth						9.6245	C10		
All engines										4.9503

				ENGINE
1.6 16V Bipower	Petrol/ Compressed Natural Gas (CNG)	76	04/99-06/10	182 B6.000, 186 A4.000

Engine	Information	A10	A20	A40	A50	A70	C10 - C30		C20	E01
All engines	x 1, D.I.S., connector type, saw teeth						9.6245	C10		
All engines										4.9503

				ENGINE
1.6 16V Blupower	Petrol/ Compressed Natural Gas (CNG)	70	04/99-06/10	186 A3.000, 186A3000C-NG

Engine	Information	A10	A20	A40	A50	A70	C10 - C30		C20	E01
Eng. 186 A3.000							9.6245	C10		4.9503
Eng. 186A3000CNG	x 1, D.I.S., connector type, saw teeth						9.6245	C10		

				ENGINE
1.6 16V GPL	Petrol/ Liquified Petroleum Gas (LPG)	76	10/01-06/10	182 B6.000

Engine	Information	A10	A20	A40	A50	A70	C10 - C30		C20	E01
All engines	x 1, D.I.S., connector type, saw teeth						9.6245	C10		
All engines										4.9503

				ENGINE
1.6 Natural Power	Petrol/ Compressed Natural Gas (CNG)	77	11/08-06/10	182B6000CNG

Engine	Information	A10	A20	A40	A50	A70	C10 - C30		C20	E01
All engines	x 1, D.I.S., connector type, saw teeth						9.6245	C10		

MULTIPLA VAN

				ENGINE
1.6	Petrol	76	09/00-06/10	182 B6.000

Engine	Information	A10	A20	A40	A50	A70	C10 - C30		C20	E01
All engines	x 1, D.I.S., connector type, saw teeth						9.6245	C10		

A10	CONDENSER	A20	CONTACT SET	A40	DISTRIBUTOR CAP	A50	ROTOR	A70	PICK-UP
C10	COIL	C20	IGNITION MODULE	C30	ELECTRONIC IGNITION KIT	E01	IGNITION CABLE SET		

The present application list is a brief version. For the detailed information about the possibility of installation on a specific vehicle, please refer to our web-catalogue http://catalogo.facet.eu/

Vehicle	alim.	kW	Date	Engine	FUNCTIONS ON THE VEHICLE							
					A10	A20	A40	A50	A70	C10 - C30	C20	E01
Bipower	Petrol/ Ethanol	76	10/01-06/10	ENGINE **182 B6.000**								
All engines				x 1, D.I.S., connector type, saw teeth						9.6245 C10		
PALIO												
1.0	Petrol	45	04/96-10/03	ENGINE **178 A1.000**								
All engines				x 1, D.I.S., connector type DIN						9.6046 C10		
All engines												4.9451
1.0	Petrol	56	04/96-10/03	ENGINE **178 A1.000**								
All engines				x 1, D.I.S., connector type DIN						9.6046 C10		
All engines												4.9451
1.0 GLX	Petrol	45	07/98-10/03	ENGINE --								
All engines				Qty: 2						9.6046 C10		
All engines												4.9451
1.1	Petrol	40	07/97-10/03	ENGINE **178 B9.033**								
All engines				version Marelli			2.8209PHT	3.8260	8.4980M			
All engines				x 1, DISTRIBUTOR, connector type DIN						9.6008 C10		
All engines											9.4020	4.8347
1.1	Petrol	42	06/06->	ENGINE **187 A1.000**								
All engines				Qty: 2						9.6046 C10		
All engines												4.9451
1.2	Petrol	44	07/97-10/04	ENGINE **178 B7.045, 178 C4.066, 188 A4.000**								
All engines				x 1, D.I.S., connector type DIN						9.6046 C10		
Eng. 178 C4.066				Qty: 2						9.6046 C10		
All engines				->eng. 2935743								4.8616
All engines				eng. type 2935743 ->								4.9451
1.2	Petrol	50	06/99-10/02	ENGINE **178 E2.000**								
All engines				x 1, D.I.S., connector type DIN						9.6046 C10		
All engines				->eng. 2935743								4.8616
All engines				eng. type 2935743 ->								4.9451
1.2	Petrol	53	07/01-06/05	ENGINE **178 B5.000**								
All engines				Qty: 2						9.6046 C10		
All engines				->eng. 2935743								4.8616
All engines				eng. type 2935743 ->								4.9451
1.2	Petrol	54	04/96->	ENGINE **176 A8.000, 178 B5.000, 178 E2.000**								
Eng. 176 A8.000, 178 E2.000				Qty: 2						9.6046 C10		
Eng. 178 B5.000				x 1, D.I.S., connector type DIN						9.6046 C10		
All engines				->eng. 2935743								4.8616
All engines				eng. type 2935743 ->								4.9451

A10	CONDENSER	**A20**	CONTACT SET	**A40**	DISTRIBUTOR CAP	**A50**	ROTOR	**A70**	PICK-UP
C10	COIL	**C20**	IGNITION MODULE	**C30**	ELECTRONIC IGNITION KIT	**E01**	IGNITION CABLE SET		

The present application list is a brief version. For the detailed information about the possibility of installation on a specific vehicle, please refer to our web-catalogue http://catalogo.facet.eu/

Vehicle	alim.	kW	Date	Engine	FUNCTIONS ON THE VEHICLE A10	A20	A40	A50	A70	C10 - C30	C20	E01
1.2	Petrol	59	03/00-10/04	ENGINE 178 D6.011, 188 A5.000								
Engine	Information											
All engines	x 1, D.I.S., connector type, saw teeth									9.6068 C10		
Eng. 188 A5.000												4.9505
1.2 75	Petrol	54	03/98->	ENGINE 178 B7.045								
Engine	Information											
All engines	Qty: 2									9.6046 C10		
All engines	->eng. 2935743											4.8616
All engines	eng. type 2935743 ->											4.9451
1.2 MPI	Petrol	44	01/02->	ENGINE 178 C4.066								
Engine	Information											
All engines	Qty: 2									9.6046 C10		
All engines	->eng. 2935743											4.8616
All engines	eng. type 2935743 ->											4.9451
1.4	Petrol	51	04/96-10/02	ENGINE 178 B2.000, 178 B2.016								
Engine	Information											
All engines	x 1, D.I.S., version 1, connector type DIN, D.I.S., connector type DIN									9.6046 C10		
1.4	Petrol	63	10/02-10/04	ENGINE 350 A1.000								
Engine	Information											
All engines	x 1, D.I.S.									9.6323 C10		
1.4	Petrol	70	06/03->	ENGINE 834 A1.000								
Engine	Information											
All engines										9.6323 C10		4.7170
1.4 Cat	Petrol	51	04/96-08/01	ENGINE 178 B2.000, 178 B2.016								
Engine	Information											
All engines	x 1, version 1, D.I.S., connector type DIN									9.6046 C10		
1.5	Petrol	62	02/02->	ENGINE 178 E5.022								
Engine	Information											
All engines	x 1, D.I.S., connector type DIN									9.6046 C10		
1.6	Petrol	68	07/97-10/00	ENGINE 178 D2.011								
Engine	Information											
All engines										9.6245 C10		4.9503
1.6	Petrol	70	06/99->	ENGINE 178 D2.011								
Engine	Information											
All engines										9.6245 C10		4.9503
1.6	Petrol	76	06/99-10/00	ENGINE 178 C7.098								
Engine	Information											
All engines	x 1, D.I.S., connector type, saw teeth									9.6245 C10		
1.6 16V	Petrol	68	07/97-10/03	ENGINE 178 C7.098, 178 D2.011								
Engine	Information											
All engines										9.6245 C10		4.9503
1.6 16V	Petrol	74	04/96->	ENGINE 178 B3.000, 182 B6.000								
Engine	Information											
Eng. 178 B3.000	x 1, D.I.S., connector type, saw teeth									9.6245 C10		
Eng. 182 B6.000										9.6245 C10		
All engines												4.9503

A10	CONDENSER	A20	CONTACT SET	A40	DISTRIBUTOR CAP	A50	ROTOR	A70	PICK-UP
C10	COIL	C20	IGNITION MODULE	C30	ELECTRONIC IGNITION KIT	E01	IGNITION CABLE SET		

The present application list is a brief version. For the detailed information about the possibility of installation on a specific vehicle, please refer to our web-catalogue http://catalogo.facet.eu/

Vehicle	alim.	kW	Date	Engine	FUNCTIONS ON THE VEHICLE							
					A10	A20	A40	A50	A70	C10 - C30	C20	E01
				ENGINE								
1.6 16V	Petrol	76	02/01-01/12	182 B6.000								
Engine	Information											
All engines	x 1, D.I.S., connector type, saw teeth									9.6245 C10		
All engines												4.9503
				ENGINE								
1.6 16V 100	Petrol	69	01/98->	178 C8.098								
Engine	Information											
All engines	Qty: 2									9.6046 C10		
				ENGINE								
1.6 16V 100	Petrol	74	01/98->	178 C8.098								
Engine	Information											
All engines	Qty: 2									9.6046 C10		
				ENGINE								
1.6 16V Sport	Petrol	76	10/01->	178 E7.000								
Engine	Information											
All engines										9.6245 C10		
PANDA I												
				ENGINE								
1.1	Petrol	37	05/91-03/95	156 C.046								
Engine	Information											
All engines	->year 01/01/93, version Marelli						2.8209PHT	3.8260	8.4980M			
All engines	->year 01/01/93, version Bosch SPi									9.6008 C10		4.8347
All engines	01/01/93 ->, Qty: 2, version Weber SPi									9.6046 C10		
All engines	->year 01/01/93										9.4020	
All engines	eng. type 5524923 ->, version Weber SPi											4.8616
All engines	->eng. 5524923, version Weber SPi											4.8887
				ENGINE								
1.1	Petrol	40	09/00-02/04	187 A1.000								
Engine	Information											
All engines	Qty: 2									9.6046 C10		
All engines												4.9451
				ENGINE								
1.1 AWD	Petrol	40	09/00-02/04	187 A1.000								
Engine	Information											
All engines	Qty: 2									9.6046 C10		
All engines												4.9451
				ENGINE								
1000	Petrol	32	01/86-04/92	156 A2.100								
Engine	Information											
All engines	version Marelli						2.8209PHT	3.8260	8.4980M			
All engines										9.6058 C10	9.4020	4.8347
				ENGINE								
1000	Petrol	37	01/85-12/92	156 A3.000								
Engine	Information											
All engines	version Marelli						2.8209PHT	3.8260	8.4980M			
All engines										9.6058 C10	9.4020	4.8347
				ENGINE								
1000 4x4	Petrol	32	01/86-07/89	156 A2.100								
Engine	Information											
All engines	version Marelli						2.8209PHT	3.8260	8.4980M			
All engines										9.6058 C10	9.4020	4.8347
				ENGINE								
1000 4x4	Petrol	33	05/86-12/94	141 C2.000, 156 A2.246								
Engine	Information											
Eng. 156 A2.246	version Marelli						2.8209PHT	3.8260	8.4980M			
All engines	->year 01/05/91, version Bosch SPi									9.6008 C10		
Eng. 141 C2.000	Qty: 2, version Weber SPi									9.6046 C10		
Eng. 156 A2.246	01/05/91 ->									9.6058 C10		
Eng. 156 A2.246											9.4020	4.8347
Eng. 141 C2.000												4.8616

A10	CONDENSER	A20	CONTACT SET	A40	DISTRIBUTOR CAP	A50	ROTOR	A70	PICK-UP
C10	COIL	C20	IGNITION MODULE	C30	ELECTRONIC IGNITION KIT	E01	IGNITION CABLE SET		

The present application list is a brief version. For the detailed information about the possibility of installation on a specific vehicle, please refer to our web-catalogue http://catalogo.facet.eu/

Vehicle	alim.	kW	Date	Engine	FUNCTIONS ON THE VEHICLE A10	A20	A40	A50	A70	C10 - C30	C20	E01
1000 4x4	Petrol	37	01/86-12/92	**156 A3.000**								
All engines	version Marelli						2.8209PHT	3.8260	8.4980M			
All engines										9.6058 C10	9.4020	4.8347
1000 Fire [CHE]	Petrol	33	11/87-04/91	**156 A2.146**								
All engines	version Marelli						2.8209PHT	3.8260	8.4980M			
All engines										9.6008 C10	9.4020	4.8347
1000 Fire [DEU]	Petrol	33	01/86-07/89	**156 A2.048**								
All engines	version Marelli						2.8209PHT	3.8260	8.4980M			
All engines										9.6001D C10	9.4020	4.8347
1000 i.e	Petrol	33	08/92-02/04	**156 A2.246**								
All engines	version Bosch SPi, version Marelli						2.8209PHT	3.8260	8.4980M			
All engines	version Bosch SPi									9.6008 C10	9.4020	4.8347
All engines	Qty: 2, version Weber SPi									9.6046 C10		
All engines	eng. type 5524923 ->, version Weber SPi											4.8616
All engines	->eng. 5524923, version Weber SPi											4.8887
1000 i.e. Cat	Petrol	33	10/87-08/98	**141 C2.000, 156 A2.246**								
Eng. 156 A2.246	version Bosch SPi, version Marelli						2.8209PHT	3.8260	8.4980M			
All engines	version Bosch SPi									9.6008 C10		
All engines	Qty: 2, version Weber SPi									9.6046 C10		
Eng. 156 A2.246	version Bosch SPi										9.4020	4.8347
All engines	eng. type 5524923 ->, version Weber SPi											4.8616
Eng. 156 A2.246	->eng. 5524923, version Weber SPi											4.8887
1100	Petrol	37	05/91-12/99	**156 C.046**								
All engines	Qty: 2									9.6046 C10		
All engines	eng. type 5524923 ->											4.8616
All engines	->eng. 5524923											4.8887
1100	Petrol	40	02/95-09/03	**176 B2.000, 187 A1.000**								
All engines	Qty: 2									9.6046 C10		
Eng. 176 B2.000												4.8616
Eng. 187 A1.000												4.9451
1100 4x4	Petrol	40	02/95-07/04	**176 B2.000**								
All engines	Qty: 2									9.6046 C10		
All engines												4.8616
1100 i.e.	Petrol	37	01/86-04/91	**156 C.046**								
All engines	version Marelli						2.8209PHT	3.8260	8.4980M			
All engines										9.6008 C10	9.4020	
1100 i.e. 4x4	Petrol	37	12/00->	**187 A1.000**								
All engines	Qty: 2									9.6046 C10		
All engines												4.9451

A10	CONDENSER	**A20**	CONTACT SET	**A40**	DISTRIBUTOR CAP	**A50**	ROTOR	**A70**	PICK-UP
C10	COIL	**C20**	IGNITION MODULE	**C30**	ELECTRONIC IGNITION KIT	**E01**	IGNITION CABLE SET		

The present application list is a brief version. For the detailed information about the possibility of installation on a specific vehicle, please refer to our web-catalogue http://catalogo.facet.eu/

Vehicle	alim.	kW	Date	Engine	FUNCTIONS ON THE VEHICLE A10	A20	A40	A50	A70	C10 - C30	C20	E01
1100 Trekking 4x4	Petrol	37	10/91-07/04	ENGINE 156 C.046								
Engine	Information											
All engines	->year 01/01/93, version Marelli						2.8209PHT	3.8260	8.4980M			
All engines	->year 01/01/93, version Bosch SPi									9.6008 C10		4.8347
All engines	01/01/93 ->, version Weber SPi, Qty: 2									9.6046 C10		
All engines	->year 01/01/93										9.4020	
All engines	eng. type 5524923 ->, version Weber SPi											4.8616
All engines	->eng. 5524923, version Weber SPi											4.8887
650	Petrol	22	01/82-07/04	ENGINE 141 A.000								
Engine	Information											
All engines	version Marelli					1.4920						
750	Petrol	25	01/86-10/03	ENGINE 141 B.000, 156 A4.000								
Engine	Information											
Eng. 141 B.000	version Ducellier				0.0339	1.3691/22	2.7658PHT	3.7683RS				
Eng. 141 B.000	version Marelli				0.0628	1.4946M	2.8198PHT	3.8247RS				
Eng. 156 A4.000	version Marelli					1.4949M	2.8209PHT	3.8260				
Eng. 156 A4.000	version Ducellier						2.7680PHT	3.7694				
All engines										9.6001D C10		
Eng. 156 A4.000												4.8347
Eng. 141 B.000												4.8466
750 Cat	Petrol	25	01/95-10/03	ENGINE 156 A4.048								
Engine	Information											
All engines	version Ducellier						2.7680PHT	3.7694			9.4029	
All engines	version Marelli						2.8209PHT	3.8260	8.4980M		9.4020	
All engines										9.6058 C10		4.8347
750 Fire	Petrol	25	11/88-04/91	ENGINE 156 A4.048								
Engine	Information											
All engines	version Ducellier						2.7680PHT	3.7694			9.4029	
All engines	version Marelli						2.8209PHT	3.8260	8.4980M		9.4020	
All engines										9.6058 C10		4.8347
800	Petrol	25	02/81-12/85	ENGINE 100 GL6.000								
Engine	Information											
All engines	version Ducellier				0.0339	1.3691/6	2.7658PHT	3.7683RS				
All engines	version Marelli				0.0617	1.4942		3.8242RS				
All engines	version Femsa					1.3720		3.7752RS				
All engines										9.6001D C10		4.8386
900	Petrol	29	04/92-12/96	ENGINE 1170 A1.046								
Engine	Information											
All engines	Qty: 2									9.6046 C10		
All engines	->year 01/10/96											4.8615
All engines	01/10/96 ->											4.9527
900	Petrol	33	10/80-06/94	ENGINE 100 GL3.000								
Engine	Information											
All engines	version Ducellier				0.0339	1.3691/22	2.7658PHT	3.7683RS				
All engines	version Marelli				0.0628	1.4946M	2.8198PHT	3.8247RS				
All engines										9.6001D C10		4.8466
900 CL	Petrol	33	01/86-12/92	ENGINE 146 A.048								
Engine	Information											
All engines	version Ducellier				0.0339	1.3691/22	2.7658PHT	3.7683RS				
All engines	version Marelli				0.0628	1.4946M	2.8198PHT	3.8247RS				
All engines										9.6001D C10		4.8466

A10	CONDENSER	A20	CONTACT SET	A40	DISTRIBUTOR CAP	A50	ROTOR	A70	PICK-UP
C10	COIL	C20	IGNITION MODULE	C30	ELECTRONIC IGNITION KIT	E01	IGNITION CABLE SET		

The present application list is a brief version. For the detailed information about the possibility of installation on a specific vehicle, please refer to our web-catalogue http://catalogo.facet.eu/

Vehicle	alim.	kW	Date	Engine	FUNCTIONS ON THE VEHICLE A10	A20	A40	A50	A70	C10 - C30	C20	E01
900 i.e.	Petrol	29	01/98->	ENGINE 1170 A1.046								
Engine	Information											
All engines	Qty: 2									9.6046 C10		
All engines												4.9527
950	Petrol	35	09/82-08/83	ENGINE A 112 B1.054								
Engine	Information											
All engines	version Marelli				0.0617	1.4942		3.8242RS				
All engines										9.6001D C10		4.8386
950 4x4	Petrol	35	09/83-12/86	ENGINE A 112 B1.054								
Engine	Information											
All engines	version Marelli				0.0617	1.4942		3.8242RS				
All engines										9.6001D C10		
PANDA II												
1.1	Petrol	40	09/03->	ENGINE 187 A1.000								
Engine	Information											
All engines	x 1, D.I.S., connector type DIN									9.6046 C10		
All engines												4.9451
1.2	Petrol	44	09/03->	ENGINE 188 A4.000								
Engine	Information											
All engines	x 1, D.I.S., connector type DIN									9.6046 C10		
All engines												4.9451
1.2	Petrol	51	03/10->	ENGINE 169 A4.000								
Engine	Information											
All engines	x 1, D.I.S.									9.6323 C10		
All engines												4.7170
1.2 4x4	Petrol	44	09/04->	ENGINE 188 A4.000								
Engine	Information											
All engines	x 1, D.I.S., connector type DIN									9.6046 C10		
All engines												4.9451
1.2 4x4	Petrol	51	04/10->	ENGINE 169 A4.000								
Engine	Information											
All engines	x 1, D.I.S.									9.6323 C10		
All engines												4.7170
1.2 Bipower	Petrol/ Ethanol	44	09/04-12/11	ENGINE 188 A4.000								
Engine	Information											
All engines	x 1, D.I.S., connector type DIN									9.6046 C10		
1.2 LPG	Petrol/ Liquified Petro-leum Gas (LPG)	44	04/09->	ENGINE 188 A4.000								
Engine	Information											
All engines	x 1, D.I.S., connector type DIN									9.6046 C10		
All engines												4.9451
1.2 LPG	Petrol/ Liquified Petro-leum Gas (LPG)	51	09/10->	ENGINE 169 A4.000								
Engine	Information											
All engines	x 1, D.I.S.									9.6323 C10		

A10	CONDENSER	A20	CONTACT SET	A40	DISTRIBUTOR CAP	A50	ROTOR	A70	PICK-UP
C10	COIL	C20	IGNITION MODULE	C30	ELECTRONIC IGNITION KIT	E01	IGNITION CABLE SET		

The present application list is a brief version. For the detailed information about the possibility of installation on a specific vehicle, please refer to our web-catalogue http://catalogo.facet.eu/

Vehicle	alim.	kW	Date	Engine	FUNCTIONS ON THE VEHICLE A10	A20	A40	A50	A70	C10 - C30	C20	E01
1.2 Natural Power	Petrol/ Com-pressed Natural Gas (CNG)	44	01/07-12/11	**188 A4.000, 188A4000C-NG**								

Engine	Information	A10	A20	A40	A50	A70	C10 - C30	C20	E01
Eng. 188 A4.000	Qty: 2						9.6046 C10		
Eng. 188A4000CNG	x 1, D.I.S., connector type DIN						9.6046 C10		
Eng. 188A4000CNG	x 1, D.I.S.						9.6323 C10		
Eng. 188 A4.000									4.9451

1.4	Petrol	74	10/06->	**169 A3.000**

Engine	Information	A10	A20	A40	A50	A70	C10 - C30	C20	E01
All engines	x 4, COIL ON PLUG, incl. spark plug connector						9.6342 C10		

1.4 16V	Petrol	51	01/10->	--

Engine	Information	A10	A20	A40	A50	A70	C10 - C30	C20	E01
All engines							9.6323 C10		4.7170

1.4 Natural Power	Petrol/ Com-pressed Natural Gas (CNG)	51	01/12-12/12	**350 A1.000**

Engine	Information	A10	A20	A40	A50	A70	C10 - C30	C20	E01
All engines							9.6323 C10		4.7170

1.4 Natural Power	Petrol/ Com-pressed Natural Gas (CNG)	57	10/09->	**350 A1.000, 350A1000C-NG**

Engine	Information	A10	A20	A40	A50	A70	C10 - C30	C20	E01
Eng. 350 A1.000							9.6323 C10		4.7170
Eng. 350A1000CNG	x 1, D.I.S.						9.6323 C10		

PANDA III

0.9	Petrol	44	12/13->	**312 A4.000, 312 A6.000**

Engine	Information	A10	A20	A40	A50	A70	C10 - C30	C20	E01
Eng. 312 A4.000	naturally Asp. Eng., Qty: 2						9.6342 C10		
Eng. 312 A6.000	x 2, COIL ON PLUG, incl. spark plug connector						9.6342 C10		

0.9	Petrol	48	02/12->	**312 A4.000**

Engine	Information	A10	A20	A40	A50	A70	C10 - C30	C20	E01
All engines	x 2, COIL ON PLUG, incl. spark plug connector						9.6342 C10		

0.9	Petrol	57	02/12->	**312 A7.000**

Engine	Information	A10	A20	A40	A50	A70	C10 - C30	C20	E01
All engines	naturally Asp. Eng., Qty: 2						9.6342 C10		

0.9	Petrol	59	11/13->	**312 A5.000**

Engine	Information	A10	A20	A40	A50	A70	C10 - C30	C20	E01
All engines	naturally Asp. Eng., Qty: 2						9.6342 C10		

0.9 4x4	Petrol	66	06/14->	**312 A2.000**

Engine	Information	A10	A20	A40	A50	A70	C10 - C30	C20	E01
All engines	naturally Asp. Eng., Qty: 2						9.6342 C10		

1.2	Petrol	51	02/12->	**169 A4.000**

Engine	Information	A10	A20	A40	A50	A70	C10 - C30	C20	E01
All engines	x 1, D.I.S.						9.6323 C10		
All engines									4.7170

A10	CONDENSER	**A20**	CONTACT SET	**A40**	DISTRIBUTOR CAP	**A50**	ROTOR	**A70**	PICK-UP
C10	COIL	**C20**	IGNITION MODULE	**C30**	ELECTRONIC IGNITION KIT	**E01**	IGNITION CABLE SET		

The present application list is a brief version. For the detailed information about the possibility of installation on a specific vehicle, please refer to our web-catalogue http://catalogo.facet.eu/

Vehicle	alim.	kW	Date	Engine	FUNCTIONS ON THE VEHICLE A10	A20	A40	A50	A70	C10 - C30	C20	E01
1.2 LPG	Petrol/ Liquified Petro-leum Gas (LPG)	51	06/12->	ENGINE **169 A4.000**								
Engine	Information	A10	A20	A40	A50	A70	C10 - C30		C20	E01		
All engines	x 1, D.I.S.						9.6323	C10				
All engines										4.7170		

PUNTO I

1.1	Petrol	40	04/96-02/00	ENGINE **176 B2.000**

Engine	Information	A10	A20	A40	A50	A70	C10 - C30		C20	E01
All engines	Qty: 2						9.6046	C10		
All engines										4.8616

1.2 16V	Petrol	63	04/97-09/99	ENGINE **176 B9.000**

Engine	Information	A10	A20	A40	A50	A70	C10 - C30		C20	E01
All engines	Qty: 2						9.6046	C10		
All engines										4.9504

1.4 GT Turbo	Petrol	96	09/96-07/99	ENGINE **176 B6.000**

Engine	Information	A10	A20	A40	A50	A70	C10 - C30		C20	E01
All engines							9.6068	C10		4.8613

1.4 GT Turbo	Petrol	98	10/93-03/97	ENGINE **176 A4.000**

Engine	Information	A10	A20	A40	A50	A70	C10 - C30		C20	E01
All engines							9.6068	C10		4.8613

1.6	Petrol	65	01/94-04/97	ENGINE **176 A9.000**

Engine	Information	A10	A20	A40	A50	A70	C10 - C30		C20	E01
All engines										4.8888

55 1.1	Petrol	40	09/93-09/99	ENGINE **176 A6.000, 176 B2.000**

Engine	Information	A10	A20	A40	A50	A70	C10 - C30		C20	E01
All engines	Qty: 2						9.6046	C10		
All engines										4.8616

60 1.2	Petrol	43	01/94-06/00	ENGINE **176 A7.000**

Engine	Information	A10	A20	A40	A50	A70	C10 - C30		C20	E01
All engines	Qty: 2						9.6046	C10		
All engines										4.8616

60 1.2	Petrol	44	09/93-06/00	ENGINE **176 B1.000, 176 B4.000**

Engine	Information	A10	A20	A40	A50	A70	C10 - C30		C20	E01
All engines	Qty: 2						9.6046	C10		
All engines										4.8616

75 1.2	Petrol	54	10/93-09/99	ENGINE **176 A8.000**

Engine	Information	A10	A20	A40	A50	A70	C10 - C30		C20	E01
All engines	Qty: 2						9.6046	C10		
All engines										4.8616

85 16V 1.2	Petrol	63	04/97-06/00	ENGINE **176 B9.000**

Engine	Information	A10	A20	A40	A50	A70	C10 - C30		C20	E01
All engines	Qty: 2						9.6046	C10		
All engines										4.9504

90 1.6	Petrol	65	04/94-04/97	ENGINE **176 A9.000**

Engine	Information	A10	A20	A40	A50	A70	C10 - C30		C20	E01
All engines										4.8888

A10	CONDENSER	**A20**	CONTACT SET	**A40**	DISTRIBUTOR CAP	**A50**	ROTOR	**A70**	PICK-UP
C10	COIL	**C20**	IGNITION MODULE	**C30**	ELECTRONIC IGNITION KIT	**E01**	IGNITION CABLE SET		

The present application list is a brief version. For the detailed information about the possibility of installation on a specific vehicle, please refer to our web-catalogue http://catalogo.facet.eu/

Vehicle	alim.	kW	Date	Engine	FUNCTIONS ON THE VEHICLE A10	A20	A40	A50	A70	C10 - C30	C20	E01

PUNTO II

				ENGINE
1.2 16V	Petrol	59	06/03->	188 A5.000

Engine	Information	A10	A20	A40	A50	A70	C10 - C30		C20	E01
All engines							9.6068	C10		4.9505

				ENGINE
1.2 16V 80	Petrol	59	09/99-04/06	188 A5.000

Engine	Information	A10	A20	A40	A50	A70	C10 - C30		C20	E01
All engines	x 1, D.I.S., connector type, saw teeth						9.6068	C10		
All engines										4.9505

				ENGINE
1.2 60	Petrol	44	09/99-12/10	188 A4.000

Engine	Information	A10	A20	A40	A50	A70	C10 - C30		C20	E01
All engines	x 1, D.I.S., connector type DIN						9.6046	C10		
All engines										4.9451

				ENGINE
1.2 Bifuel	Petrol/ Liquified Petro-leum Gas (LPG)	44	08/07-03/12	188 A4.000

Engine	Information	A10	A20	A40	A50	A70	C10 - C30		C20	E01
All engines	x 1, D.I.S., connector type DIN						9.6046	C10		
All engines										4.9451

				ENGINE
1.2 Bipower	Petrol/ Ethanol	44	08/01-05/03	188 A4.000

Engine	Information	A10	A20	A40	A50	A70	C10 - C30		C20	E01
All engines	x 1, D.I.S., connector type DIN						9.6046	C10		

				ENGINE
1.2 Natural Power	Petrol/ Com-pressed Natural Gas (CNG)	38	04/04-04/06	188 A4.000, 188A4000C-NG

Engine	Information	A10	A20	A40	A50	A70	C10 - C30		C20	E01
Eng. 188 A4.000	Qty: 2						9.6046	C10		
Eng. 188A4000CNG	x 1, D.I.S., connector type DIN						9.6046	C10		
Eng. 188 A4.000										4.9451

				ENGINE
1.2 Natural Power	Petrol/ Com-pressed Natural Gas (CNG)	44	01/03-03/12	188 A4.000, 188A4000C-NG

Engine	Information	A10	A20	A40	A50	A70	C10 - C30		C20	E01
Eng. 188 A4.000	Qty: 2						9.6046	C10		
Eng. 188A4000CNG	x 1, D.I.S., connector type DIN						9.6046	C10		
Eng. 188 A4.000										4.9451

				ENGINE
1.4	Petrol	70	09/03-03/12	843 A1.000

Engine	Information	A10	A20	A40	A50	A70	C10 - C30		C20	E01
All engines	x 4, COIL ON PLUG, incl. spark plug connector						9.6342	C10		

				ENGINE
1.4	Petrol	71	11/05->	199 A6.000

Engine	Information	A10	A20	A40	A50	A70	C10 - C30		C20	E01
All engines	Qty: 4						9.6342	C10		

				ENGINE
1.8 130 HGT	Petrol	96	09/99-03/12	183 A1.000, 188 A6.000

Engine	Information	A10	A20	A40	A50	A70	C10 - C30		C20	E01
All engines	x 4, COIL ON PLUG, incl. spark plug connector						9.6284	C10		

				ENGINE
1.8 16V	Petrol	96	06/03->	188 A6.000

Engine	Information	A10	A20	A40	A50	A70	C10 - C30		C20	E01
All engines	Qty: 4						9.6284	C10		

A10	CONDENSER	A20	CONTACT SET	A40	DISTRIBUTOR CAP	A50	ROTOR	A70	PICK-UP
C10	COIL	C20	IGNITION MODULE	C30	ELECTRONIC IGNITION KIT	E01	IGNITION CABLE SET		

The present application list is a brief version. For the detailed information about the possibility of installation on a specific vehicle, please refer to our web-catalogue http://catalogo.facet.eu/

Vehicle	alim.	kW	Date	Engine	FUNCTIONS ON THE VEHICLE A10	A20	A40	A50	A70	C10 - C30	C20	E01

PUNTO III

				ENGINE
1.2	Petrol	49	02/14->	199 B9.000

Engine	Information	A10	A20	A40	A50	A70	C10 - C30		C20	E01
All engines	x 1, D.I.S.						9.6323	C10		
All engines										4.7170

				ENGINE
1.2	Petrol	51	03/12->	169 A4.000

Engine	Information	A10	A20	A40	A50	A70	C10 - C30		C20	E01
All engines	x 1, D.I.S.						9.6323	C10		
All engines										4.7170

				ENGINE
1.4	Petrol	55	03/12->	199A7000

Engine	Information	A10	A20	A40	A50	A70	C10 - C30		C20	E01
All engines	x 1, D.I.S.						9.6323	C10		

				ENGINE
1.4	Petrol	57	03/12->	350 A1.000

Engine	Information	A10	A20	A40	A50	A70	C10 - C30		C20	E01
All engines	x 1, D.I.S.						9.6323	C10		
All engines										4.7170

				ENGINE
1.4 Bifuel	Petrol/ Liquified Petro-leum Gas (LPG)	57	03/12->	350 A1.000

Engine	Information	A10	A20	A40	A50	A70	C10 - C30		C20	E01
All engines	x 1, D.I.S.						9.6323	C10		

				ENGINE
1.4 LPG	Petrol/ Liquified Petro-leum Gas (LPG)	57	03/12->	350 A1.000

Engine	Information	A10	A20	A40	A50	A70	C10 - C30		C20	E01
All engines										4.7170

				ENGINE
1.4 Natural Power	Petrol/ Com-pressed Natural Gas (CNG)	57	03/09->	350 A1.000, 350A1000C-NG

Engine	Information	A10	A20	A40	A50	A70	C10 - C30		C20	E01
Eng. 350 A1.000							9.6323	C10		4.7170
Eng. 350A1000CNG	x 1, D.I.S.						9.6323	C10		

				ENGINE
1.4 Turbo Multi Air	Petrol	99	03/12->	955 A2.000

Engine	Information	A10	A20	A40	A50	A70	C10 - C30		C20	E01
All engines	x 4, COIL ON PLUG						9.6449	C10		

PUNTO III / GRANDE PUNTO

				ENGINE
1.2	Petrol	48	10/05->	199 A4.000

Engine	Information	A10	A20	A40	A50	A70	C10 - C30		C20	E01
All engines	x 1, D.I.S.						9.6323	C10		
All engines										4.7170

				ENGINE
1.2	Petrol	51	09/10->	169 A4.000

Engine	Information	A10	A20	A40	A50	A70	C10 - C30		C20	E01
All engines	x 1, D.I.S.						9.6323	C10		
All engines										4.7170

				ENGINE
1.2 [IND]	Petrol	48	01/08->	--

Engine	Information	A10	A20	A40	A50	A70	C10 - C30		C20	E01
All engines							9.6323	C10		4.7170

A10	CONDENSER	A20	CONTACT SET	A40	DISTRIBUTOR CAP	A50	ROTOR	A70	PICK-UP
C10	COIL	C20	IGNITION MODULE	C30	ELECTRONIC IGNITION KIT	E01	IGNITION CABLE SET		

The present application list is a brief version. For the detailed information about the possibility of installation on a specific vehicle, please refer to our web-catalogue http://catalogo.facet.eu/

Vehicle	alim.	kW	Date	Engine	FUNCTIONS ON THE VEHICLE A10	A20	A40	A50	A70	C10 - C30	C20	E01
1.2 Actual	Petrol	48	09/09->	ENGINE --								
Engine: All engines — Information:										9.6323 C10		4.7170
1.2 LPG	Petrol/ Liquified Petro-leum Gas (LPG)	51	06/08-12/12	ENGINE 199 A4.000								
Engine: All engines — Information: x 1, D.I.S.										9.6323 C10		
Engine: All engines — Information:												4.7170
1.4	Petrol	55	10/05-07/07	ENGINE 199A7000, 8S8Y1								
Engine: Eng. 199A7000 — Information: x 1, D.I.S.										9.6323 C10		
Engine: Eng. 8S8Y1 — Information:												4.7170
1.4	Petrol	57	06/05-12/15	ENGINE 350 A1.000								
Engine: All engines — Information: x 1, D.I.S.										9.6323 C10		
Engine: All engines — Information:												4.7170
1.4 16V	Petrol	70	10/05-08/11	ENGINE 199 A6.000								
Engine: All engines — Information: x 4, COIL ON PLUG, incl. spark plug connector										9.6342 C10		
1.4 16V [IND]	Petrol	70	01/08->	ENGINE --								
Engine: All engines — Information: Qty: 4										9.6342 C10		
1.4 Actual	Petrol	57	09/09->	ENGINE --								
Engine: All engines — Information:										9.6323 C10		4.7170
1.4 LPG	Petrol/ Liquified Petro-leum Gas (LPG)	57	12/08->	ENGINE 350 A1.000								
Engine: All engines — Information: x 1, D.I.S.										9.6323 C10		
Engine: All engines — Information:												4.7170
1.4 Natural Power	Petrol/ Com-pressed Natural Gas (CNG)	57	07/08->	ENGINE 350 A1.000, 350A1000C-NG								
Engine: Eng. 350 A1.000 — Information:										9.6323 C10		4.7170
Engine: Eng. 350A1000CNG — Information: x 1, D.I.S.										9.6323 C10		
PUNTO III EVO												
1.2	Petrol	48	10/09-02/12	ENGINE 199 A4.000								
Engine: All engines — Information: x 1, D.I.S.										9.6323 C10		
Engine: All engines — Information:												4.7170
1.2	Petrol	51	10/09-02/12	ENGINE 169 A4.000								
Engine: All engines — Information: x 1, D.I.S.										9.6323 C10		
Engine: All engines — Information:												4.7170

A10	CONDENSER	**A20**	CONTACT SET	**A40**	DISTRIBUTOR CAP	**A50**	ROTOR	**A70**	PICK-UP
C10	COIL	**C20**	IGNITION MODULE	**C30**	ELECTRONIC IGNITION KIT	**E01**	IGNITION CABLE SET		

The present application list is a brief version. For the detailed information about the possibility of installation on a specific vehicle, please refer to our web-catalogue http://catalogo.facet.eu/

Vehicle	alim.	kW	Date	Engine	FUNCTIONS ON THE VEHICLE A10	A20	A40	A50	A70	C10 - C30	C20	E01
1.4	Petrol	55	07/09-02/12	ENGINE 199A7000, 8S8Y1								
Eng. 199A7000				x 1, D.I.S.						9.6323 C10		
Eng. 8S8Y1												4.7170
1.4	Petrol	57	03/09->	ENGINE 350 A1.000								
All engines										9.6323 C10		4.7170
All engines				x 1, D.I.S.						9.6323 C10		
1.4 16V	Petrol	99	10/09-02/12	ENGINE 955 A2.000								
All engines				->year 01/11/09, x 4, COIL ON PLUG ---------- 01/12/09 ->, x 4, COIL ON PLUG						9.6449 C10		
1.4 LPG	Petrol/ Liquified Petroleum Gas (LPG)	57	06/09-02/12	ENGINE 350 A1.000								
All engines				x 1, D.I.S.						9.6323 C10		
All engines												4.7170
1.4 Natural Power	Petrol/ Compressed Natural Gas (CNG)	57	10/09-02/12	ENGINE 350 A1.000, 350A1000C-NG								
Eng. 350 A1.000										9.6323 C10		4.7170
Eng. 350A1000CNG				x 1, D.I.S.						9.6323 C10		
QUBO												
1.4	Petrol	54	02/08->	ENGINE KFT, KFV								
All engines				x 4, COIL ON PLUG						9.6305 C10		
All engines				01/01/16 ->								4.7170
1.4	Petrol	57	10/09->	ENGINE 350 A1.000								
All engines				x 1, D.I.S.						9.6323 C10		
All engines				01/01/16 ->								4.7170
1.4 Natural Power	Petrol/ Compressed Natural Gas (CNG)	57	10/09->	ENGINE 350 A1.000, 350A1000C-NG								
Eng. 350 A1.000										9.6323 C10		4.7170
Eng. 350A1000CNG				x 1, D.I.S.						9.6323 C10		
REGATA												
1.1 60 , 60 L	Petrol	43	10/83-08/86	ENGINE 138 B.000								
All engines				version Ducellier	0.0339		2.7654PHT	3.7683RS				
All engines				version Marelli		1.4946M	2.8201PHT	3.8247RS				
All engines										9.6001D C10		4.8354
1.6	Petrol	60	10/84-06/89	ENGINE 149 A.000								
All engines				version Ducellier	0.0339		2.7654PHT	3.7683RS				
All engines				version Marelli	0.0627	1.4946M	2.8201PHT	3.8247RS				

A10	CONDENSER	**A20**	CONTACT SET	**A40**	DISTRIBUTOR CAP	**A50**	ROTOR	**A70**	PICK-UP
C10	COIL	**C20**	IGNITION MODULE	**C30**	ELECTRONIC IGNITION KIT	**E01**	IGNITION CABLE SET		

The present application list is a brief version. For the detailed information about the possibility of installation on a specific vehicle, please refer to our web-catalogue http://catalogo.facet.eu/

Vehicle	alim.	kW	Date	Engine	FUNCTIONS ON THE VEHICLE A10	A20	A40	A50	A70	C10 - C30	C20	E01
1.6	Petrol	60	10/84-06/89	ENGINE 149 A.000								

Engine	Information	A10	A20	A40	A50	A70	C10 - C30		C20	E01
All engines							9.6001D	C10		

100 Super 1.6	Petrol	74	10/83-12/90	ENGINE 149 A2.000								

Engine	Information	A10	A20	A40	A50	A70	C10 - C30		C20	E01
All engines	version Marelli			2.8204PHT	3.8255RS					
All engines							9.6003	C10		

70 1.3	Petrol	48	09/83-07/89	ENGINE 149 A3.000								

Engine	Information	A10	A20	A40	A50	A70	C10 - C30		C20	E01
All engines	->year 30/09/85, version Ducellier	0.0339		2.7654PHT	3.7683RS					
All engines	version Marelli	0.0627	1.4946M	2.8201PHT	3.8247RS	8.4976M				
All engines	->year 30/09/85						9.6001D	C10		
All engines	01/10/85 ->						9.6002	C10	9.4020	4.8354

70 1.3	Petrol	50	09/83-07/89	ENGINE 138 B2.000								

Engine	Information	A10	A20	A40	A50	A70	C10 - C30		C20	E01
All engines	->year 30/09/85, version Ducellier	0.0339		2.7654PHT	3.7683RS					
All engines	version Marelli	0.0627	1.4946M	2.8201PHT	3.8247RS	8.4976M				
All engines	->year 30/09/85						9.6001D	C10		
All engines	01/10/85 ->						9.6002	C10	9.4020	4.8354

85 1.5	Petrol	58	05/85-12/87	ENGINE 149 A5.000								

Engine	Information	A10	A20	A40	A50	A70	C10 - C30		C20	E01
All engines	+automatic transmission, version Marelli			2.8201PHT	3.8247RS					
All engines	version Marelli			2.8204PHT	3.8255RS					
All engines	+automatic transmission						9.6002	C10		
All engines							9.6003	C10		

85 1.6	Petrol	60	10/83-06/90	ENGINE 149 A.000								

Engine	Information	A10	A20	A40	A50	A70	C10 - C30		C20	E01
All engines	version Ducellier	0.0339		2.7654PHT	3.7683RS					
All engines	version Marelli	0.0627	1.4946M	2.8201PHT	3.8247RS					
All engines							9.6001D	C10		

90 i.e. 1.6	Petrol	66	01/87-07/89	ENGINE 149 C2.000								

Engine	Information	A10	A20	A40	A50	A70	C10 - C30		C20	E01
All engines	version Marelli			2.8198PHT	3.8257RS					
All engines						8.4977/1				

RITMO I

1.1	Petrol	43	04/85-12/87	ENGINE 146 A4.048								

Engine	Information	A10	A20	A40	A50	A70	C10 - C30		C20	E01
All engines	version Ducellier	0.0339		2.7654PHT	3.7683RS					
All engines	version Marelli		1.4946M	2.8201PHT	3.8247RS					
All engines							9.6001D	C10		

1.3	Petrol	48	11/83-08/85	ENGINE 149 A3.000								

Engine	Information	A10	A20	A40	A50	A70	C10 - C30		C20	E01
All engines	version Ducellier	0.0339	1.3691/6	2.7649PHT	3.7683RS					
All engines	version Marelli			2.8201PHT	3.8247RS	8.4976M				
All engines	->year 31/12/82						9.6001D	C10		
All engines	01/01/83 ->						9.6002	C10		
All engines									9.4020	

1.5	Petrol	55	10/85-05/87	ENGINE 138 C2.048								

Engine	Information	A10	A20	A40	A50	A70	C10 - C30		C20	E01
All engines	version Marelli			2.8204PHT	3.8255RS					
All engines							9.6002	C10		

A10	CONDENSER	A20	CONTACT SET	A40	DISTRIBUTOR CAP	A50	ROTOR	A70	PICK-UP
C10	COIL	C20	IGNITION MODULE	C30	ELECTRONIC IGNITION KIT	E01	IGNITION CABLE SET		

The present application list is a brief version. For the detailed information about the possibility of installation on a specific vehicle, please refer to our web-catalogue http://catalogo.facet.eu/

Vehicle	alim.	kW	Date	Engine	FUNCTIONS ON THE VEHICLE A10	A20	A40	A50	A70	C10 - C30	C20	E01
1.6	Petrol	74	01/83-12/87	ENGINE 149 A4.000								
Engine	Information											
All engines	version Marelli						2.8204PHT	3.8255RS				
All engines										9.6003 C10		
RITMO II												
105 1.6	Petrol	77	01/83-12/87	ENGINE 138 AR.000								
Engine	Information											
All engines	version Marelli							3.8254RS	8.4961/1			
75 1.5	Petrol	55	09/85-12/88	ENGINE 138 A2.000								
Engine	Information											
All engines	version Ducellier				0.0339	1.3691/6	2.7649PHT	3.7683RS				
All engines	version Marelli						2.8204PHT	3.8255RS				
All engines	->year 31/12/82									9.6001D C10		
All engines	01/01/83 ->									9.6003 C10		
SCUDO												
2.0	Petrol	100	09/99-10/06	ENGINE RFN								
Engine	Information											
All engines	x 4, COIL ON PLUG									9.6308 C10		
SCUDO I												
1.6	Petrol	58	02/96-12/06	ENGINE 220 A 2.000								
Engine	Information											
All engines	x 1, D.I.S., connector type, saw teeth									9.6068 C10		
All engines												4.8655
2.0	Petrol	100	05/00-12/06	ENGINE RFN, RFN (EW10J4)								
Engine	Information											
Eng. RFN	x 4, COIL ON PLUG									9.6308 C10		
Eng. RFN (EW10J4)	incl. spark plug connector									9.6308 C10		
2.0 16V	Petrol	100	06/00-12/06	ENGINE RFN, RFN (EW10J4)								
Engine	Information											
Eng. RFN	x 4, COIL ON PLUG									9.6308 C10		
Eng. RFN (EW10J4)	incl. spark plug connector									9.6308 C10		
SEDICI												
1.6 16V	Petrol	79	06/06-10/14	ENGINE M16A								
Engine	Information											
All engines	x 2, SEMI-DIRECT									9.6470 C10		
All engines	->year 15/06/09											4.7013
1.6 16V	Petrol	88	06/06-10/14	ENGINE M16A								
Engine	Information											
All engines	->year 01/06/09, Fitting Position:for cylinder 1, Fitting Position:for cylinder 3, x 2, SEMI-DIRECT									9.6470 C10		
All engines	->year 15/06/09											4.7013
1.6 16V 4x4	Petrol	79	06/06-10/14	ENGINE M16A								
Engine	Information											
All engines	x 2, SEMI-DIRECT									9.6470 C10		
All engines	->year 15/06/09											4.7013
1.6 16V 4x4	Petrol	88	06/06-10/14	ENGINE M16A								
Engine	Information											
All engines	->year 15/06/09											4.7013

A10	CONDENSER	A20	CONTACT SET	A40	DISTRIBUTOR CAP	A50	ROTOR	A70	PICK-UP
C10	COIL	C20	IGNITION MODULE	C30	ELECTRONIC IGNITION KIT	E01	IGNITION CABLE SET		

The present application list is a brief version. For the detailed information about the possibility of installation on a specific vehicle, please refer to our web-catalogue http://catalogo.facet.eu/

Vehicle	alim.	kW	Date	Engine	FUNCTIONS ON THE VEHICLE: A10	A20	A40	A50	A70	C10 - C30	C20	E01

SEICENTO / 600

				ENGINE
0.9	Petrol	29	11/97-01/10	1170 A1.046

Engine	Information	A10	A20	A40	A50	A70	C10 - C30		C20	E01
All engines	x 1, D.I.S., connector type DIN						9.6046	C10		
All engines										4.8615

				ENGINE
1.1	Petrol	40	01/98-01/10	176 B2.000, 187 A1.000

Engine	Information	A10	A20	A40	A50	A70	C10 - C30		C20	E01
All engines	x 1, D.I.S., connector type DIN						9.6046	C10		
Eng. 176 B2.000										4.8616
Eng. 187 A1.000										4.9451

SIENA

				ENGINE
1.2	Petrol	44	01/98->	178 B7.045

Engine	Information	A10	A20	A40	A50	A70	C10 - C30		C20	E01
All engines	Qty: 2						9.6046	C10		
All engines	->eng. 2935743									4.8616
All engines	eng. type 2935743 ->									4.9451

				ENGINE
1.3	Petrol	44	09/01-12/12	178 C4.066, 188 A4.000

Engine	Information	A10	A20	A40	A50	A70	C10 - C30		C20	E01
Eng. 178 C4.066	Qty: 2						9.6046	C10		
Eng. 188 A4.000	x 1, D.I.S., connector type DIN						9.6046	C10		
All engines	->eng. 2935743									4.8616
All engines	eng. type 2935743 ->									4.9451

				ENGINE
1.3	Petrol	54	09/98-12/02	178 B5.000

Engine	Information	A10	A20	A40	A50	A70	C10 - C30		C20	E01
All engines	x 1, D.I.S., connector type DIN						9.6046	C10		
All engines	->eng. 2935743									4.8616
All engines	eng. type 2935743 ->									4.9451

				ENGINE
1.3	Petrol	59	09/01-12/09	188 A5.000

Engine	Information	A10	A20	A40	A50	A70	C10 - C30		C20	E01
All engines	FOR: (EU), x 1, D.I.S., connector type, saw teeth						9.6068	C10		
All engines	NOT FOR: (EU), x 1, D.I.S.						9.6316	C10		
All engines	->eng. 2935743									4.8616
All engines	eng. type 2935743 ->									4.9451

				ENGINE
1.4	Petrol	51	04/96-12/09	178 B2.000, 178 B2.016

Engine	Information	A10	A20	A40	A50	A70	C10 - C30		C20	E01
All engines	x 1, D.I.S., connector type DIN						9.6046	C10		

				ENGINE
1.4 Cat	Petrol	51	04/96-12/09	178 B2.000, 178 B2.016

Engine	Information	A10	A20	A40	A50	A70	C10 - C30		C20	E01
All engines	x 1, D.I.S., connector type DIN						9.6046	C10		

				ENGINE
1.5	Petrol	62	06/04->	178 E5.022

Engine	Information	A10	A20	A40	A50	A70	C10 - C30		C20	E01
All engines	Qty: 2						9.6046	C10		
All engines	x 1, D.I.S., connector type DIN						9.6046	C10		

				ENGINE
1.6	Petrol	76	11/00-12/12	182 B6.000

Engine	Information	A10	A20	A40	A50	A70	C10 - C30		C20	E01
All engines	x 1, D.I.S., connector type, saw teeth						9.6245	C10		
All engines										4.9503

				ENGINE
1.6 16V	Petrol	74	09/98-12/09	178 B3.000

Engine	Information	A10	A20	A40	A50	A70	C10 - C30		C20	E01
All engines	x 1, D.I.S., connector type, saw teeth						9.6245	C10		
All engines										4.9503

A10	CONDENSER	A20	CONTACT SET	A40	DISTRIBUTOR CAP	A50	ROTOR	A70	PICK-UP
C10	COIL	C20	IGNITION MODULE	C30	ELECTRONIC IGNITION KIT	E01	IGNITION CABLE SET		

The present application list is a brief version. For the detailed information about the possibility of installation on a specific vehicle, please refer to our web-catalogue http://catalogo.facet.eu/

Vehicle	alim.	kW	Date	Engine	FUNCTIONS ON THE VEHICLE A10	A20	A40	A50	A70	C10 - C30	C20	E01
1.6 16V	Petrol	76	03/99->	ENGINE 178 D2.011, 182 B6.000								
Engine	Information											
All engines										9.6245 C10		4.9503
STILO												
1.2 16V	Petrol	59	02/02-11/06	ENGINE 188 A5.000								
Engine	Information											
All engines	x 4, COIL ON PLUG, incl. spark plug connector									9.6342 C10		
1.4	Petrol	70	01/04-08/08	ENGINE 843 A1.000								
Engine	Information											
All engines	x 4, COIL ON PLUG, incl. spark plug connector									9.6342 C10		
1.4 16V	Petrol	66	03/05-08/08	ENGINE 192 B2.000								
Engine	Information											
All engines	x 4, COIL ON PLUG, incl. spark plug connector									9.6342 C10		
1.4 16V	Petrol	70	10/03-08/08	ENGINE 843 A1.000								
Engine	Information											
All engines	x 4, COIL ON PLUG, incl. spark plug connector									9.6342 C10		
1.6	Petrol	77	04/05-08/08	ENGINE 192 B3.000								
Engine	Information											
All engines	x 4, COIL ON PLUG									9.6350 C10		
1.6 16V	Petrol	77	03/05-12/07	ENGINE 192 B3.000								
Engine	Information											
All engines	x 4, COIL ON PLUG									9.6350 C10		
1.8 16V	Petrol	98	10/01-08/08	ENGINE 192 A4.000								
Engine	Information											
All engines	x 4, COIL ON PLUG, incl. spark plug connector									9.6284 C10		
STRADA												
1.2	Petrol	44	04/03->	ENGINE 188 A4.000								
Engine	Information											
All engines	x 1, D.I.S., connector type DIN									9.6046 C10		
All engines	->eng. 2935743											4.8616
All engines	eng. type 2935743 ->											4.9451
1.2	Petrol	54	06/99->	ENGINE 178 B5.000, 178 B7.045								
Engine	Information											
Eng. 178 B5.000	x 1, D.I.S., connector type DIN									9.6046 C10		
Eng. 178 B7.045	Qty: 2									9.6046 C10		
All engines	->eng. 2935743											4.8616
All engines	eng. type 2935743 ->											4.9451
1.2 Trekking	Petrol	60	11/05->	ENGINE --, 178 B7.045								
Engine	Information											
Eng. --	Qty: 2									9.6046 C10		
Eng. 178 B7.045	x 1, D.I.S., connector type DIN									9.6046 C10		
Eng. --	->eng. 2935743											4.8616
Eng. --	eng. type 2935743 ->											4.9451
TALENTO												
2.0	Petrol	55	03/89-03/94	ENGINE 170 B								
Engine	Information											
All engines	version Ducellier						2.7654PHT	3.7694				
All engines											9.4005	

A10	CONDENSER	A20	CONTACT SET	A40	DISTRIBUTOR CAP	A50	ROTOR	A70	PICK-UP
C10	COIL	C20	IGNITION MODULE	C30	ELECTRONIC IGNITION KIT	E01	IGNITION CABLE SET		

The present application list is a brief version. For the detailed information about the possibility of installation on a specific vehicle, please refer to our web-catalogue http://catalogo.facet.eu/

Vehicle	alim.	kW	Date	Engine	FUNCTIONS ON THE VEHICLE							
					A10	A20	A40	A50	A70	C10 - C30	C20	E01

TEMPRA

				ENGINE
1.4 i.e.	Petrol	51	04/90-08/96	159 A2.000, 160 A1.046, 836 A4.000

Engine	Information	A10	A20	A40	A50	A70	C10 - C30		C20	E01
Eng. 159 A2.000	version Marelli			2.8201PHT		8.4976M				
Eng. 160 A1.046	->eng. 8503995, version Marelli			2.8204PHT						
Eng. 160 A1.046	eng. type 8503995 ->, version Marelli			2.8215PHT						
Eng. 159 A2.000, 160 A1.046	->eng. 8813854, version Marelli				3.8259					
Eng. 159 A2.000, 160 A1.046	eng. type 8813854 ->, version Marelli				3.8260					
Eng. 160 A1.046	eng. type 8813854 ->, version Marelli					8.4977/1				
Eng. 159 A2.000, 160 A1.046	->year 31/03/93						9.6008	C10		
Eng. 160 A1.046	01/04/93 ->						9.6048	C10		
Eng. 836 A4.000							9.6068	C10		4.8655
Eng. 159 A2.000									9.4020	4.8354
Eng. 160 A1.046	->eng. 8503995									4.8808
Eng. 160 A1.046	eng. type 8503995 ->									4.8815

				ENGINE
1.4 i.e.	Petrol	57	03/91-08/96	159 A2.000

Engine	Information	A10	A20	A40	A50	A70	C10 - C30		C20	E01
All engines	version Marelli			2.8201PHT		8.4976M				
All engines	->eng. 8813854, version Marelli				3.8259					
All engines	eng. type 8813854 ->, version Marelli				3.8260					
All engines							9.6008	C10	9.4020	4.8354

				ENGINE
1.6	Petrol	51	04/90-07/96	159 A3.048

Engine	Information	A10	A20	A40	A50	A70	C10 - C30		C20	E01
All engines	+automatic transmission, +air conditioning, +power steering, eng. type 8327193 ->, ->eng. 8503995, version Marelli			2.8204PHT						
All engines	+air conditioning, Selecta, 01/01/93 ->, version Marelli			2.8214PHT						
All engines	->eng. 8327193, version Marelli, +automatic transmission, +power steering, +air conditioning, eng. type 8503995 ->, ->year 01/01/93, 01/01/93 ->, Selecta			2.8215PHT						
All engines	version Marelli, Colour:Black				3.8255RS					
All engines	->eng. 8813854, version Marelli, Colour:White				3.8259					
All engines	eng. type 8813854 ->, version Marelli, Colour:White				3.8260					
All engines	eng. type 8813854 ->, version Marelli					8.4977/1				
All engines							9.6048	C10		4.8815
All engines	Selecta									4.8808

				ENGINE
1.6	Petrol	63	03/90-12/96	159 A3.000

Engine	Information	A10	A20	A40	A50	A70	C10 - C30		C20	E01
All engines	+automatic transmission, +air conditioning, +power steering, eng. type 8327193 ->, ->eng. 8503995, version Marelli			2.8204PHT						
All engines	+air conditioning, Selecta, 01/01/93 ->, version Marelli			2.8214PHT						
All engines	->eng. 8327193, version Marelli, +automatic transmission, +power steering, +air conditioning, eng. type 8503995 ->, ->year 01/01/93, 01/01/93 ->, Selecta			2.8215PHT						
All engines	version Marelli, Colour:Black				3.8255RS					
All engines	->eng. 8813854, version Marelli, Colour:White				3.8259					
All engines	eng. type 8813854 ->, version Marelli, Colour:White				3.8260					
All engines	eng. type 8813854 ->, version Marelli					8.4977/1				
All engines							9.6048	C10		4.8815
All engines	Selecta									4.8808

				ENGINE
1.6 i.e.	Petrol	55	06/92-08/96	159 A3.048, 835 C1.000

Engine	Information	A10	A20	A40	A50	A70	C10 - C30		C20	E01
Eng. 159 A3.048	+automatic transmission, +air conditioning, +power steering, eng. type 8327193 ->, ->eng. 8503995, version Marelli			2.8204PHT						
Eng. 159 A3.048	+air conditioning, Selecta, 01/01/93 ->, version Marelli			2.8214PHT						
Eng. 159 A3.048	->eng. 8327193, version Marelli, +automatic transmission, +power steering, +air conditioning, eng. type 8503995 ->, ->year 01/01/93, 01/01/93 ->, Selecta			2.8215PHT						
Eng. 159 A3.048	version Marelli, Colour:Black				3.8255RS					
Eng. 159 A3.048	->eng. 8813854, version Marelli, Colour:White				3.8259					
Eng. 159 A3.048	eng. type 8813854 ->, version Marelli, Colour:White				3.8260					
Eng. 159 A3.048	eng. type 8813854 ->, version Marelli					8.4977/1				

A10	CONDENSER	A20	CONTACT SET	A40	DISTRIBUTOR CAP	A50	ROTOR	A70	PICK-UP
C10	COIL	C20	IGNITION MODULE	C30	ELECTRONIC IGNITION KIT	E01	IGNITION CABLE SET		

The present application list is a brief version. For the detailed information about the possibility of installation on a specific vehicle, please refer to our web-catalogue http://catalogo.facet.eu/

Vehicle	alim.	kW	Date	Engine	FUNCTIONS ON THE VEHICLE A10	A20	A40	A50	A70	C10 - C30	C20	E01
1.6 i.e.	Petrol	55	06/92-08/96	ENGINE 159 A3.048, 835 C1.000								
Eng. 159 A3.048										9.6048 C10		
Eng. 835 C1.000										9.6068 C10		4.8655
Eng. 159 A3.048	->eng. 7747268, +automatic transmission, +power steering, ->eng. 8503995, +automatic transmission, +power steering, +air conditioning											4.8808
Eng. 159 A3.048	eng. type 7747268 ->, +automatic transmission, +power steering, eng. type 8503995 ->											4.8815
1.6 i.e.	Petrol	57	06/90-08/96	ENGINE 159 A3.046, 835 C1.000								
Eng. 159 A3.046	+automatic transmission, +air conditioning, +power steering, eng. type 8327193 ->, ->eng. 8503995, version Marelli						2.8204PHT					
Eng. 159 A3.046	+air conditioning, Selecta, 01/01/93 ->, version Marelli						2.8214PHT					
Eng. 159 A3.046	->eng. 8327193, version Marelli, +automatic transmission, +power steering, +air conditioning, eng. type 8503995 ->, ->year 01/01/93, 01/01/93 ->, Selecta						2.8215PHT					
Eng. 159 A3.046	version Marelli, Colour:Black							3.8255RS				
Eng. 159 A3.046	->eng. 8813854, version Marelli, Colour:White							3.8259				
Eng. 159 A3.046	eng. type 8813854 ->, version Marelli, Colour:White							3.8260				
Eng. 159 A3.046										9.6048 C10		
Eng. 835 C1.000										9.6068 C10		4.8655
Eng. 159 A3.046	->eng. 7747268, +automatic transmission, +power steering, ->eng. 8503995, +automatic transmission, +power steering, +air conditioning											4.8808
Eng. 159 A3.046	eng. type 7747268 ->, +automatic transmission, +power steering, eng. type 8503995 ->											4.8815
1.6 i.e.	Petrol	63	06/94-08/96	ENGINE 159 B9.000								
All engines												4.8888
1.6 i.e.	Petrol	66	06/94-08/96	ENGINE 159 B9.000								
All engines												4.8888
1.8 4x4	Petrol	80	07/92-06/93	ENGINE 159 A4.000								
All engines	+automatic transmission, ->eng. 1339267, version Marelli						2.8204PHT					
All engines	+automatic transmission, eng. type 1339267 ->, version Marelli						2.8214PHT					
All engines	version Marelli						2.8215PHT	3.8260	8.4977/1			
All engines										9.8003 C30		4.8692
All engines	FOR: (SA)											4.8398
1.8 i.e.	Petrol	66	09/93-08/96	ENGINE 835 C4.000								
All engines	Qty: 2									9.6046 C10		
All engines												4.8889
1.8 i.e.	Petrol	74	10/94-08/96	ENGINE 836 A5.000								
All engines	Qty: 2									9.6046 C10		
All engines												4.8889
1.8 i.e.	Petrol	76	09/93-08/96	ENGINE 835 C2.000								
All engines	Qty: 2									9.6046 C10		
All engines												4.8889
1.8 i.e.	Petrol	77	03/92-08/96	ENGINE 159 A4.046								
All engines	+automatic transmission, ->eng. 1339267, version Marelli						2.8204PHT					
All engines	+automatic transmission, eng. type 1339267 ->, version Marelli						2.8214PHT					

A10	CONDENSER	A20	CONTACT SET	A40	DISTRIBUTOR CAP	A50	ROTOR	A70	PICK-UP
C10	COIL	C20	IGNITION MODULE	C30	ELECTRONIC IGNITION KIT	E01	IGNITION CABLE SET		

The present application list is a brief version. For the detailed information about the possibility of installation on a specific vehicle, please refer to our web-catalogue http://catalogo.facet.eu/

Vehicle	alim.	kW	Date	Engine	FUNCTIONS ON THE VEHICLE A10	A20	A40	A50	A70	C10 - C30	C20	E01
1.8 i.e.	Petrol	77	03/92-08/96	ENGINE 159 A4.046								
All engines	version Marelli						2.8215PHT	3.8260	8.4977/1			
All engines										9.8003	C30	4.8692
All engines	FOR: (SA)											4.8398
1.8 i.e.	Petrol	81	03/90-08/96	ENGINE 159 A4.000								
All engines	+automatic transmission, ->eng. 1339267, version Marelli						2.8204PHT					
All engines	+automatic transmission, eng. type 1339267 ->, version Marelli						2.8214PHT					
All engines	version Marelli						2.8215PHT	3.8260	8.4977/1			
All engines										9.8003	C30	4.8692
All engines	FOR: (SA)											4.8398
2.0	Petrol	80	04/90-06/93	ENGINE 159 A6.046								
All engines	+automatic transmission, ->eng. 1339267, version Marelli						2.8204PHT					
All engines	+automatic transmission, eng. type 1339267 ->, version Marelli						2.8214PHT					
All engines	version Marelli						2.8215PHT	3.8260	8.4977/1			
All engines										9.8003	C30	
All engines	->eng. 1518014											4.8692
2.0 i.e.	Petrol	83	10/90-09/96	ENGINE 159 A6.046								
All engines	+automatic transmission, ->eng. 1339267, version Marelli						2.8204PHT					
All engines	+automatic transmission, eng. type 1339267 ->, version Marelli						2.8214PHT					
All engines	version Marelli						2.8215PHT	3.8260	8.4977/1			
All engines										9.8003	C30	
All engines	->eng. 1518014											4.8692
2.0 i.e. [BRA]	Petrol	81	04/93-12/96	ENGINE 159 A6.011								
All engines	+automatic transmission, version Marelli						2.8214PHT					
All engines	version Marelli						2.8215PHT	3.8260	8.4977/1			
All engines										9.8003	C30	
All engines	->eng. 1518014											4.8692
2.0 i.e. 4x4	Petrol	83	03/92-03/95	ENGINE 159 A6.046								
All engines	+automatic transmission, ->eng. 1339267, version Marelli						2.8204PHT					
All engines	+automatic transmission, eng. type 1339267 ->, version Marelli						2.8214PHT					
All engines	version Marelli						2.8215PHT	3.8260	8.4977/1			
All engines										9.8003	C30	
All engines	->eng. 1518014											4.8692
TIPO I												
1.1	Petrol	41	01/88-10/91	ENGINE 160 A3.000								
All engines	version Ducellier						2.7680PHT	3.7694			9.4029	
All engines	version Marelli						2.8209PHT	3.8260	8.4980M		9.4020	
All engines										9.6008	C10	4.8347
1.1 i.e.	Petrol	37	10/94-10/95	ENGINE 156 C.046								
All engines										9.6068	C10	4.8694

A10	CONDENSER	A20	CONTACT SET	A40	DISTRIBUTOR CAP	A50	ROTOR	A70	PICK-UP
C10	COIL	C20	IGNITION MODULE	C30	ELECTRONIC IGNITION KIT	E01	IGNITION CABLE SET		

The present application list is a brief version. For the detailed information about the possibility of installation on a specific vehicle, please refer to our web-catalogue http://catalogo.facet.eu/

Vehicle	alim.	kW	Date	Engine	FUNCTIONS ON THE VEHICLE							
					A10	A20	A40	A50	A70	C10 - C30	C20	E01
1.4	Petrol	52	07/87-12/89	ENGINE 160 A1.000, 160 A1.048								
Eng. 160 A1.000	version Marelli						2.8201PHT	3.8247RS	8.4976M			
Eng. 160 A1.048	version Marelli						2.8204PHT					
Eng. 160 A1.048	->VET. 2415766, version Marelli							3.8255RS				
Eng. 160 A1.048	version Marelli, VET. 2415766 ->							3.8259				
Eng. 160 A1.000										9.6008 C10	9.4020	4.8354
Eng. 160 A1.048										9.6048 C10		4.8808
1.4 i.e.	Petrol	51	05/89-04/95	ENGINE 160 A1.046, 836 A4.000								
Eng. 160 A1.046	->eng. 8503995, version Marelli						2.8204PHT					
Eng. 160 A1.046	eng. type 8503995 ->, version Marelli						2.8215PHT					
Eng. 160 A1.046	->VET. 2415766, version Marelli							3.8255RS				
Eng. 160 A1.046	version Marelli, VET. 2415766 ->							3.8259				
Eng. 160 A1.046										9.6048 C10		
Eng. 836 A4.000										9.6068 C10		4.8655
Eng. 160 A1.046	->eng. 8503995											4.8808
Eng. 160 A1.046	eng. type 8503995 ->											4.8815
1.4 i.e.	Petrol	57	05/89-04/95	ENGINE 159 A2.000								
All engines	+automatic transmission, +air conditioning, +power steering, version Marelli						2.8198PHT					
All engines	version Marelli						2.8201PHT	3.8260	8.4976M			
All engines										9.6008 C10	9.4020	4.8354
1.6	Petrol	56	03/93-10/95	ENGINE 159 A3.048, 835 C1.000								
All engines	+automatic transmission, +air conditioning, +power steering, eng. type 8327193 ->, ->eng. 8503995, version Marelli						2.8204PHT					
All engines	+air conditioning, Selecta, 01/01/93 ->, version Marelli						2.8214PHT					
All engines	->eng. 8327193, version Marelli, +automatic transmission, +power steering, +air conditioning, eng. type 8503995 ->, ->year 01/01/93, 01/01/93 ->, Selecta						2.8215PHT					
All engines	version Marelli							3.8259				
Eng. 159 A3.048	eng. type 8813854 ->, version Marelli								8.4977/1			
Eng. 159 A3.048										9.6048 C10		
Eng. 835 C1.000										9.6068 C10		4.8655
Eng. 159 A3.048	+automatic transmission, +power steering, ->eng. 8503995, +automatic transmission, +power steering, +air conditioning											4.8808
Eng. 159 A3.048	->year 31/12/93, +automatic transmission, +power steering, eng. type 8503995 ->											4.8815
1.6	Petrol	58	03/88-10/92	ENGINE 160 A2.000								
All engines	version Marelli						2.8204PHT	3.8255RS				
All engines										9.6048 C10		4.8808
1.6	Petrol	61	01/88-10/91	ENGINE 160 A2.000								
All engines	version Marelli						2.8204PHT	3.8255RS				
All engines										9.6048 C10		4.8808
1.6 i.e.	Petrol	55	10/92-04/95	ENGINE 159 A3.048, 835 C1.000								
All engines	+automatic transmission, +air conditioning, +power steering, eng. type 8327193 ->, ->eng. 8503995, version Marelli						2.8204PHT					
All engines	+air conditioning, Selecta, 01/01/93 ->, version Marelli						2.8214PHT					
All engines	->eng. 8327193, version Marelli, +automatic transmission, +power steering, +air conditioning, eng. type 8503995 ->, ->year 01/01/93, 01/01/93 ->, Selecta						2.8215PHT					
All engines	version Marelli							3.8259				
Eng. 159 A3.048	eng. type 8813854 ->, version Marelli								8.4977/1			
Eng. 159 A3.048										9.6048 C10		

A10	CONDENSER	A20	CONTACT SET	A40	DISTRIBUTOR CAP	A50	ROTOR	A70	PICK-UP
C10	COIL	C20	IGNITION MODULE	C30	ELECTRONIC IGNITION KIT	E01	IGNITION CABLE SET		

The present application list is a brief version. For the detailed information about the possibility of installation on a specific vehicle, please refer to our web-catalogue http://catalogo.facet.eu/

Vehicle	alim.	kW	Date	Engine	FUNCTIONS ON THE VEHICLE: A10	A20	A40	A50	A70	C10 - C30	C20	E01
1.6 i.e.	Petrol	55	10/92-04/95	ENGINE 159 A3.048, 835 C1.000								

Engine	Information	A10	A20	A40	A50	A70	C10 - C30	C20	E01
Eng. 835 C1.000							9.6068 C10		4.8655
Eng. 159 A3.048	+automatic transmission, +power steering, ->eng. 8503995, +automatic transmission, +power steering, +air conditioning								4.8808
Eng. 159 A3.048	->year 31/12/93, +automatic transmission, +power steering, eng. type 8503995 ->								4.8815

Vehicle	alim.	kW	Date	Engine
1.6 i.e.	Petrol	57	07/90-01/93	ENGINE 159 A3.046

Engine	Information	A10	A20	A40	A50	A70	C10 - C30	C20	E01
All engines	+automatic transmission, +air conditioning, +power steering, eng. type 8327193 ->, ->eng. 8503995, version Marelli			2.8204PHT					
All engines	+air conditioning, Selecta, 01/01/93 ->, version Marelli			2.8214PHT					
All engines	->eng. 8327193, version Marelli, +automatic transmission, +power steering, +air conditioning, eng. type 8503995 ->, ->year 01/01/93, 01/01/93 ->, Selecta			2.8215PHT					
All engines	version Marelli				3.8259				
All engines							9.6048 C10		
All engines	+automatic transmission, +power steering, ->eng. 8503995, +automatic transmission, +power steering, +air conditioning								4.8808
All engines	->year 31/12/93, +automatic transmission, +power steering, eng. type 8503995 ->								4.8815

Vehicle	alim.	kW	Date	Engine
1.6 i.e. [BRA]	Petrol	60	03/93-04/95	ENGINE 160 E2.011

Engine	Information	A10	A20	A40	A50	A70	C10 - C30	C20	E01
All engines	+automatic transmission, +air conditioning, +power steering, eng. type 8327193 ->, ->eng. 8503995, version Marelli			2.8204PHT					
All engines	+air conditioning, Selecta, 01/01/93 ->, version Marelli			2.8214PHT					
All engines	->eng. 8327193, version Marelli, +automatic transmission, +power steering, +air conditioning, eng. type 8503995 ->, ->year 01/01/93, 01/01/93 ->, Selecta			2.8215PHT					
All engines	version Marelli				3.8259				
All engines							9.6068 C10		4.8655

Vehicle	alim.	kW	Date	Engine
1.6 SX DGT	Petrol	66	05/89-10/95	ENGINE 159 A3.000

Engine	Information	A10	A20	A40	A50	A70	C10 - C30	C20	E01
All engines	+automatic transmission, +power steering, version Marelli			2.8204PHT					
All engines	version Marelli			2.8215PHT					
All engines	->eng. 8327193, version Marelli				3.8255RS				
All engines	eng. type 8327193 ->, version Marelli, +automatic transmission, +power steering				3.8259				
All engines							9.6048 C10		4.8815
All engines	+automatic transmission								4.8808

Vehicle	alim.	kW	Date	Engine
1.8 i.e	Petrol	71	03/93-04/95	ENGINE 836 A5.000

Engine	Information	A10	A20	A40	A50	A70	C10 - C30	C20	E01
All engines	Qty: 2						9.6046 C10		
All engines	eng. type 1486450 ->								4.8889

Vehicle	alim.	kW	Date	Engine
1.8 i.e.	Petrol	66	03/93-10/95	ENGINE 835 C4.000, 836 A6.000

Engine	Information	A10	A20	A40	A50	A70	C10 - C30	C20	E01
All engines	Qty: 2						9.6046 C10		
All engines	eng. type 1486450 ->, eng. type 1486450 ->								4.8889

Vehicle	alim.	kW	Date	Engine
1.8 i.e.	Petrol	74	10/94-10/95	ENGINE 836 A5.000

Engine	Information	A10	A20	A40	A50	A70	C10 - C30	C20	E01
All engines	Qty: 2						9.6046 C10		
All engines	eng. type 1486450 ->								4.8889

Vehicle	alim.	kW	Date	Engine
1.8 i.e.	Petrol	76	04/93-04/95	ENGINE 835 C2.000

Engine	Information	A10	A20	A40	A50	A70	C10 - C30	C20	E01
All engines	Qty: 2						9.6046 C10		
All engines	eng. type 1486450 ->								4.8889

A10	CONDENSER	A20	CONTACT SET	A40	DISTRIBUTOR CAP	A50	ROTOR	A70	PICK-UP
C10	COIL	C20	IGNITION MODULE	C30	ELECTRONIC IGNITION KIT	E01	IGNITION CABLE SET		

The present application list is a brief version. For the detailed information about the possibility of installation on a specific vehicle, please refer to our web-catalogue http://catalogo.facet.eu/

Vehicle	alim.	kW	Date	Engine	FUNCTIONS ON THE VEHICLE							
					A10	A20	A40	A50	A70	C10 - C30	C20	E01
1.8 i.e.	Petrol	**77**	10/90-06/93	**159 A4.046**								
All engines	+automatic transmission, ->eng. 1339559, version Marelli						2.8204PHT					
All engines	+automatic transmission, eng. type 1339559 ->, version Marelli						2.8214PHT					
All engines	version Marelli						2.8215PHT	3.8260	8.4977/1			
All engines										9.8003	C30	
All engines	LHD											4.8692
1.8 i.e.	Petrol	**81**	10/90-06/93	**159 A4.000**								
All engines	+automatic transmission, ->eng. 1339559, version Marelli						2.8204PHT					
All engines	+automatic transmission, eng. type 1339559 ->, version Marelli						2.8214PHT					
All engines	version Marelli						2.8215PHT	3.8260	8.4977/1			
All engines										9.8003	C30	
All engines	LHD											4.8692
1.8 i.e.16V Sport	Petrol	**100**	11/89-06/92	**160 A5.000**								
All engines	version Marelli						2.8204PHT	3.8260	8.4977/1			
All engines										9.8003	C30	
2.0	Petrol	**104**	03/93-04/95	**836 A3.011**								
All engines	version Marelli						2.8214PHT	3.8260	8.4977/1			
All engines										9.8003	C30	4.8650
2.0	Petrol	**85**	10/90-10/92	**159 A5.046, 159 A6.046**								
All engines	+automatic transmission, ->eng. 1339559, version Marelli						2.8204PHT					
All engines	+automatic transmission, +air conditioning, eng. type 1339559 ->, version Marelli						2.8214PHT					
All engines	version Marelli						2.8215PHT	3.8260	8.4977/1			
All engines										9.8003	C30	
All engines	->eng. 1518014, LHD											4.8692
2.0 16V	Petrol	**107**	07/91-04/95	**160 A8.046**								
All engines	->year 01/11/91, version Marelli						2.8204PHT					
All engines	01/11/91 ->, version Marelli						2.8214PHT					
All engines	version Marelli							3.8260	8.4977/1			
All engines										9.8003	C30	4.8650
2.0 i.e.	Petrol	**80**	06/90-03/92	**159 A5.046**								
All engines	+automatic transmission, ->eng. 1339559, version Marelli						2.8204PHT					
All engines	+automatic transmission, +air conditioning, eng. type 1339559 ->, version Marelli						2.8214PHT					
All engines	version Marelli						2.8215PHT	3.8260	8.4977/1			
All engines										9.8003	C30	
All engines	LHD											4.8692
2.0 i.e.	Petrol	**83**	03/90-04/95	**159 A6.046**								
All engines	+automatic transmission, ->eng. 1339559, version Marelli						2.8204PHT					
All engines	+automatic transmission, +air conditioning, eng. type 1339559 ->, version Marelli						2.8214PHT					
All engines	version Marelli						2.8215PHT	3.8260	8.4977/1			
All engines										9.8003	C30	
All engines	->eng. 1518014											4.8692

A10	CONDENSER	**A20**	CONTACT SET	**A40**	DISTRIBUTOR CAP	**A50**	ROTOR	**A70**	PICK-UP
C10	COIL	**C20**	IGNITION MODULE	**C30**	ELECTRONIC IGNITION KIT	**E01**	IGNITION CABLE SET		

The present application list is a brief version. For the detailed information about the possibility of installation on a specific vehicle, please refer to our web-catalogue http://catalogo.facet.eu/

Vehicle	alim.	kW	Date	Engine	FUNCTIONS ON THE VEHICLE: A10	A20	A40	A50	A70	C10 - C30	C20	E01
2.0 i.e. [BRA]	Petrol	85	03/93-10/95	**159 A6.011**								
All engines	+automatic transmission, ->eng. 1339559, version Marelli					2.8204PHT						
All engines	+automatic transmission, +air conditioning, eng. type 1339559 ->, version Marelli					2.8214PHT						
All engines	version Marelli					2.8215PHT	3.8260	8.4977/1				
All engines									9.8003	C30		
All engines	->eng. 1518014											4.8692
2.0 i.e. 16V Sport	Petrol	102	03/93-04/95	**836 A3.000**								
All engines	version Marelli					2.8214PHT	3.8260	8.4977/1				
All engines									9.8003	C30		4.8650
TIPO II												
1.4	Petrol	70	10/15->	**843 A1.000**								
All engines	x 4, COIL ON PLUG, incl. spark plug connector									9.6342	C10	
ULYSSE I												
1.8	Petrol	73	05/97-08/02	**LFW (XU7JP)**								
All engines										9.6088	C10	4.8674
2.0	Petrol	89	06/94-08/02	**RFU (XU10J2C)**								
All engines										9.6088	C10	4.8494
2.0 16V	Petrol	100	09/00-08/02	**RFN (EW10J4)**								
All engines	incl. spark plug connector									9.6308	C10	
2.0 Turbo	Petrol	108	06/94-08/02	**RGX (XU10J2CTE)**								
All engines										9.6088	C10	4.8494
ULYSSE II												
2.0	Petrol	100	08/02-06/11	**RFN, RFN (EW10J4)**								
Eng. RFN	x 4, COIL ON PLUG									9.6308	C10	
Eng. RFN (EW10J4)										9.6308	C10	
UNO												
1.0	Petrol	31	06/89-02/92	**156 A2.000**								
All engines	Qty: 2									9.6046	C10	
1.0	Petrol	35	11/94-08/00	**146 A2.166**								
All engines	version Marelli						2.8209PHT	3.8260	8.4980M			
All engines											9.4020	
1.0 i.e.	Petrol	33	09/89-03/94	**146 C7.000**								
All engines	Qty: 2									9.6046	C10	
1.3 Turbo i.e.	Petrol	74	09/89-03/91	**146 A2.246**								
All engines	version Marelli						2.8215PHT	3.8259				
All engines										9.8003	C30	

A10	CONDENSER	**A20**	CONTACT SET	**A40**	DISTRIBUTOR CAP	**A50**	ROTOR	**A70**	PICK-UP
C10	COIL	**C20**	IGNITION MODULE	**C30**	ELECTRONIC IGNITION KIT	**E01**	IGNITION CABLE SET		

The present application list is a brief version. For the detailed information about the possibility of installation on a specific vehicle, please refer to our web-catalogue http://catalogo.facet.eu/

Vehicle	alim.	kW	Date	Engine	FUNCTIONS ON THE VEHICLE A10	A20	A40	A50	A70	C10 - C30	C20	E01
1.3 Turbo i.e.	Petrol	77	04/85-08/89	**146 A2.000**								
All engines	version Marelli						2.8198PHT	3.8255RS				
All engines	+catalytic converter									9.8003	C30	
1.4 Turbo i.e.	Petrol	82	09/89-09/93	**146 A8.046**								
All engines	version Marelli						2.8201PHT	3.8255RS				
All engines										9.8003	C30	
1.4 Turbo i.e.	Petrol	87	12/89-12/96	**146 A8.000**								
All engines	version Marelli						2.8201PHT	3.8255RS				
All engines										9.8003	C30	
45 0.9	Petrol	33	03/83-07/96	**146 A.000, 146 A1.000**								
All engines	version Ducellier				0.0339	1.3691/22	2.7658PHT	3.7683RS				
All engines	version Marelli				0.0628	1.4946M	2.8198PHT	3.8247RS				
All engines										9.6001D	C10	
45 0.9	Petrol	34	02/84-12/88	**146 A.000**								
All engines	version Ducellier				0.0339	1.3691/22	2.7658PHT	3.7683RS				
All engines	version Marelli				0.0628	1.4946M	2.8198PHT	3.8247RS				
All engines										9.6001D	C10	
45 0.9 Trend	Petrol	33	09/89-09/92	**146 A.048**								
All engines	version Ducellier				0.0339	1.3691/22	2.7658PHT	3.7683RS				
All engines	version Marelli				0.0628	1.4946M	2.8198PHT	3.8247RS				
All engines										9.6001D	C10		4.8386
45 1.0	Petrol	32	06/86-12/93	**156 A2.100**								
All engines	version Marelli						2.8209PHT	3.8260	8.4980M			9.4020	
All engines										9.6008	C10		4.8347
All engines	version Ducellier											9.4029	
45 i.e. 1.0	Petrol	33	10/84-10/95	**156 A2.246**								
All engines	version Marelli						2.8209PHT	3.8260	8.4980M			
All engines										9.6008	C10	9.4020	4.8347
50 1.1	Petrol	37	01/90-12/93	**156 C.046**								
All engines	version Marelli						2.8209PHT	3.8260	8.4980M			
All engines										9.6008	C10	9.4020	4.8347
50 i.e. 1.1	Petrol	36	06/92-12/93	**146 C3.000**								
All engines	version Marelli						2.8209PHT	3.8260	8.4980M			
All engines										9.6008	C10	9.4020	4.8347
55 1.1	Petrol	40	01/83-08/89	**138 B.000**								
All engines													4.8354

A10	CONDENSER	**A20**	CONTACT SET	**A40**	DISTRIBUTOR CAP	**A50**	ROTOR	**A70**	PICK-UP
C10	COIL	**C20**	IGNITION MODULE	**C30**	ELECTRONIC IGNITION KIT	**E01**	IGNITION CABLE SET		

The present application list is a brief version. For the detailed information about the possibility of installation on a specific vehicle, please refer to our web-catalogue http://catalogo.facet.eu/

Vehicle	alim.	kW	Date	Engine	FUNCTIONS ON THE VEHICLE A10	A20	A40	A50	A70	C10 - C30	C20	E01
60 1.1	Petrol	42	04/89-12/92	ENGINE 160 A3.000								
Engine	Information	A10	A20	A40	A50	A70	C10 - C30		C20	E01		
All engines	version Ducellier			2.7680PHT	3.7694				9.4029			
All engines	version Marelli			2.8209PHT	3.8260	8.4980M			9.4020			
All engines							9.6008	C10		4.8347		
60 1.1	Petrol	43	05/85-02/92	ENGINE 146 A4.048, 146 A6.000								
Engine	Information	A10	A20	A40	A50	A70	C10 - C30		C20	E01		
All engines	version Marelli			2.8201PHT	3.8247RS	8.4976M						
Eng. 146 A4.048	version Marelli				3.8260							
All engines							9.6008	C10	9.4020			
Eng. 146 A4.048										4.8354		
70 1.3	Petrol	50	01/83-04/85	ENGINE 138 B2.000								
Engine	Information	A10	A20	A40	A50	A70	C10 - C30		C20	E01		
All engines										4.8354		
70 1.3i SX	Petrol	0	01/83-12/89	ENGINE --								
Engine	Information	A10	A20	A40	A50	A70	C10 - C30		C20	E01		
All engines	version Marelli			2.8204PHT	3.8255RS							
All engines	version Bosch				3.7561RS	8.2653						
All engines							9.6003	C10				
70 i.e. 1.4	Petrol	51	09/89-07/96	ENGINE 160 A1.046								
Engine	Information	A10	A20	A40	A50	A70	C10 - C30		C20	E01		
All engines	->eng. 8818804, version Marelli			2.8204PHT								
All engines	eng. type 8818804 ->, version Marelli			2.8214PHT								
All engines	->eng. 7768530, version Marelli				3.8255RS							
All engines	eng. type 7768530 ->, version Marelli				3.8259							
All engines							9.6048	C10		4.8808		
70 i.e. 1.4	Petrol	53	09/89-12/93	ENGINE 146 C1.000								
Engine	Information	A10	A20	A40	A50	A70	C10 - C30		C20	E01		
All engines	->eng. 8818804, version Marelli			2.8204PHT								
All engines	eng. type 8818804 ->, version Marelli			2.8214PHT								
All engines	->eng. 7768530, version Marelli				3.8255RS							
All engines	eng. type 7768530 ->, version Marelli				3.8259							
All engines							9.6048	C10		4.8808		
70 S 1.4	Petrol	52	10/88-06/06	ENGINE 160 A1.048								
Engine	Information	A10	A20	A40	A50	A70	C10 - C30		C20	E01		
All engines	->eng. 8818804, version Marelli			2.8204PHT								
All engines	eng. type 8818804 ->, version Marelli			2.8214PHT								
All engines	->eng. 7768530, version Marelli				3.8255RS							
All engines	eng. type 7768530 ->, version Marelli				3.8259							
All engines							9.6048	C10		4.8808		
75 i.e. 1.5	Petrol	55	10/85-12/93	ENGINE 138 C2.048, 149 C1.000								
Engine	Information	A10	A20	A40	A50	A70	C10 - C30		C20	E01		
All engines	->eng. 8818804, version Marelli			2.8204PHT								
Eng. 149 C1.000	eng. type 8818804 ->, version Marelli			2.8214PHT								
Eng. 138 C2.048	version Bosch				3.7561RS	8.2653						
All engines	->eng. 7768530, version Marelli				3.8255RS							
Eng. 149 C1.000	eng. type 7768530 ->, version Marelli				3.8259							
Eng. 138 C2.048							9.6003	C10				
Eng. 149 C1.000							9.6048	C10		4.8808		
CS 1.1	Petrol	43	09/87-09/91	ENGINE 146 A6.000								
Engine	Information	A10	A20	A40	A50	A70	C10 - C30		C20	E01		
All engines	version Marelli			2.8201PHT	3.8247RS	8.4976M						
All engines							9.6058	C10	9.4020			

A10	CONDENSER	A20	CONTACT SET	A40	DISTRIBUTOR CAP	A50	ROTOR	A70	PICK-UP
C10	COIL	C20	IGNITION MODULE	C30	ELECTRONIC IGNITION KIT	E01	IGNITION CABLE SET		

The present application list is a brief version. For the detailed information about the possibility of installation on a specific vehicle, please refer to our web-catalogue http://catalogo.facet.eu/

Vehicle	alim.	kW	Date	Engine	FUNCTIONS ON THE VEHICLE							
					A10	A20	A40	A50	A70	C10 - C30	C20	E01
Mondo 1.0	Petrol	33	01/98->	**146 A2.166**								
Engine	Information											
All engines	version Marelli						2.8209PHT	3.8260	8.4980M			
All engines										9.6008 C10	9.4020	4.8347
Mondo 1.0 [IND]	Petrol	33	01/98->	**146 A2.166**								
Engine	Information											
All engines	version Marelli						2.8209PHT	3.8260	8.4980M			
All engines										9.6008 C10	9.4020	4.8347
Mondo 1.0 i.e.	Petrol	33	01/96->	**146 D8.000**								
Engine	Information											
All engines										9.6068 C10		4.8694
Mondo 1.2 i.e. [IND]	Petrol	44	01/96->	**178 D5.066**								
Engine	Information											
All engines	Qty: 2									9.6046 C10		
All engines												4.8616
X 1/9												
1.3	Petrol	54	10/75-06/78	**128 AS.000**								
Engine	Information											
All engines	version Marelli					1.4940		3.8236RS				
All engines										9.6001D C10		

A10	CONDENSER	**A20**	CONTACT SET	**A40**	DISTRIBUTOR CAP	**A50**	ROTOR	**A70**	PICK-UP
C10	COIL	**C20**	IGNITION MODULE	**C30**	ELECTRONIC IGNITION KIT	**E01**	IGNITION CABLE SET		

The present application list is a brief version. For the detailed information about the possibility of installation on a specific vehicle, please refer to our web-catalogue http://catalogo.facet.eu/

Vehicle	alim.	kW	Date	Engine	FUNCTIONS ON THE VEHICLE							
					A10	A20	A40	A50	A70	C10 - C30	C20	E01
BRAVA												
1.6i 16v	Petrol	78	01/00->	ENGINE 1.6 Mpi								
Engine: All engines	Information:									9.6245 C10		4.9503
1.8i 16v	Petrol	97	01/00->	ENGINE 1.8 Mpi								
Engine: All engines	Information: Qty: 4									9.6284 C10		
COUPÈ												
2.0i 16V	Petrol	0	01/95-12/97	ENGINE 2.0 Mpi								
Engine: All engines	Information: version Marelli						2.8214PHT	3.8260	8.4977/1			
Engine: All engines	Information:									9.8003 C30		4.8650
MAREA												
1.8i 16v	Petrol	97	01/00-12/01	ENGINE 1.8 Mpi								
Engine: All engines	Information: Qty: 4									9.6284 C10		
2.0i 20v	Petrol	104	01/99-12/00	ENGINE 2.0 Mpi								
Engine: All engines	Information: Qty: 5									9.6214 C10		
PALIO												
1.0i	Petrol	0	01/96->	ENGINE 1.0 Mpi, 1.0 Mpi Fire								
Engine: All engines	Information: Qty: 2									9.6046 C10		
1.0i 16v	Petrol	0	01/01->	ENGINE 1.0 Mpi 16v Fire								
Engine: All engines	Information:									9.6316 C10		4.9505
1.3i 16v	Petrol	0	01/00->	ENGINE 1.3 Mpi 16v Fire								
Engine: All engines	Information:									9.6316 C10		4.9505
1.5i	Petrol	0	01/96-12/00	ENGINE 1.5 Mpi								
Engine: All engines	Information: Qty: 2									9.6046 C10		
1.6i	Petrol	0	01/99-12/00	ENGINE 1.6 Mpi, 1.6 Spi								
Engine: Eng. 1.6 Spi	Information: Qty: 2									9.6046 C10		
Engine: Eng. 1.6 Mpi	Information:									9.6245 C10		4.9503
1.6i 16v	Petrol	0	01/96->	ENGINE 1.6 Mpi 16v								
Engine: All engines	Information:									9.6245 C10		4.9503
SIENA												
1.0i	Petrol	0	01/99-12/00	ENGINE 1.0 Mpi								
Engine: All engines	Information: Qty: 2									9.6046 C10		
1.3i 16v	Petrol	0	01/00-12/00	ENGINE 1.3 Mpi Fire								
Engine: All engines	Information:									9.6316 C10		4.9505

A10	CONDENSER	A20	CONTACT SET	A40	DISTRIBUTOR CAP	A50	ROTOR	A70	PICK-UP
C10	COIL	C20	IGNITION MODULE	C30	ELECTRONIC IGNITION KIT	E01	IGNITION CABLE SET		

The present application list is a brief version. For the detailed information about the possibility of installation on a specific vehicle, please refer to our web-catalogue http://catalogo.facet.eu/

Vehicle	alim.	kW	Date	Engine	FUNCTIONS ON THE VEHICLE A10	A20	A40	A50	A70	C10 - C30	C20	E01
1.5i	Petrol	0	01/99-12/00	**1.5 Mpi**								
Engine: All engines	Information: Qty: 2									9.6046 C10		
1.6i	Petrol	0	01/98-12/00	**1.6 Mpi, 1.6 Spi**								
Engine: All engines	Information: Qty: 2									9.6046 C10		
1.6i 16v	Petrol	0	01/98-12/99	**1.6 Mpi**								
Engine: All engines	Information:									9.6245 C10		4.9503
STRADA												
1.5i	Petrol	0	01/99-12/01	**1.5 Mpi**								
Engine: All engines	Information: Qty: 2									9.6046 C10		
1.6i 16v	Petrol	0	01/99->	**1.6 Mpi**								
Engine: All engines	Information:									9.6245 C10		4.9503
1.6i 8v	Petrol	0	01/99-12/00	**1.6 Mpi**								
Engine: All engines	Information: Qty: 2									9.6046 C10		
TIPO												
1.6i	Petrol	0	01/93-12/97	**1.6 Mpi, 1.6 Spi**								
Engine: All engines	Information:									9.6068 C10		
Eng. 1.6 Spi												4.8655
2.0i 16V	Petrol	0	01/94-12/95	**2.0 Mpi**								
Engine: All engines	Information: version Marelli						2.8214PHT	3.8260	8.4977/1			
All engines										9.8003 C30		4.8650
2.0i 8v	Petrol	0	01/94-12/95	**2.0 Mpi**								
Engine: All engines	Information: version Marelli						2.8215PHT	3.8260	8.4977/1			
All engines										9.8003 C30		
UNO												
1.4i Turbo	Petrol	0	01/94-12/96	**1.4 Mpi**								
Engine: All engines	Information: ->ch. 5.407.526, version Marelli						2.8201PHT	3.8255RS				
All engines	ch. 5.407.527 ->, version Marelli						2.8215PHT	3.8259				
All engines										9.8003 C30		
1.5i	Petrol	0	01/92-12/96	**1.5 Spi**								
Engine: All engines	Information: Qty: 2									9.6046 C10		
1.5i Furgoneta	Petrol	0	01/92->	**1.5 Mpi, 1.5 Spi**								
Engine: All engines	Information: Qty: 2									9.6046 C10		
1.6i	Petrol	0	01/95-12/96	**1.6 Mpi**								
Engine: All engines	Information:									9.6068 C10		

A10	CONDENSER	**A20**	CONTACT SET	**A40**	DISTRIBUTOR CAP	**A50**	ROTOR	**A70**	PICK-UP
C10	COIL	**C20**	IGNITION MODULE	**C30**	ELECTRONIC IGNITION KIT	**E01**	IGNITION CABLE SET		

The present application list is a brief version. For the detailed information about the possibility of installation on a specific vehicle, please refer to our web-catalogue http://catalogo.facet.eu/

Vehicle	alim.	kW	Date	Engine	FUNCTIONS ON THE VEHICLE							
					A10	A20	A40	A50	A70	C10 - C30	C20	E01

UNO CS

				ENGINE
1.5i	Petrol	0	01/92-12/96	1.5 Spi

Engine	Information	A10	A20	A40	A50	A70	C10 - C30		C20	E01
All engines	Qty: 2						9.6046	C10		

UNO MILLE

				ENGINE
1.0i	Petrol	0	01/96->	1.0 Mpi, 1.0 Mpi Fire, 1.0 Spi

Engine	Information	A10	A20	A40	A50	A70	C10 - C30		C20	E01
All engines	Qty: 2						9.6046	C10		

A10	CONDENSER	A20	CONTACT SET	A40	DISTRIBUTOR CAP	A50	ROTOR	A70	PICK-UP
C10	COIL	C20	IGNITION MODULE	C30	ELECTRONIC IGNITION KIT	E01	IGNITION CABLE SET		

The present application list is a brief version. For the detailed information about the possibility of installation on a specific vehicle, please refer to our web-catalogue http://catalogo.facet.eu/

Vehicle	alim.	kW	Date	Engine	FUNCTIONS ON THE VEHICLE A10	A20	A40	A50	A70	C10 - C30	C20	E01

B-MAX

				ENGINE
1.0 EcoBoost	Petrol	103	02/16->	YYJC

Engine	Information	A10	A20	A40	A50	A70	C10 - C30		C20	E01
All engines	x 3, COIL ON PLUG						9.6519	C10		

				ENGINE
1.0 EcoBoost	Petrol	74	10/12->	SFJA, SFJB, SFJC, SFJD

Engine	Information	A10	A20	A40	A50	A70	C10 - C30		C20	E01
All engines	x 3, COIL ON PLUG						9.6519	C10		

				ENGINE
1.0 EcoBoost	Petrol	88	08/12->	M1JA

Engine	Information	A10	A20	A40	A50	A70	C10 - C30		C20	E01
All engines	x 3, COIL ON PLUG						9.6519	C10		

				ENGINE
1.0 EcoBoost	Petrol	92	10/12->	M1JE, M1JH

Engine	Information	A10	A20	A40	A50	A70	C10 - C30		C20	E01
All engines	x 3, COIL ON PLUG						9.6519	C10		

				ENGINE
1.4	Petrol	66	10/12->	SPJD, SPJE

Engine	Information	A10	A20	A40	A50	A70	C10 - C30		C20	E01
All engines	x 1, D.I.S.						9.6381	C10		
Eng. SPJD										4.7242

				ENGINE
1.4 LPG	Petrol/ Liquified Petro-leum Gas (LPG)	64	08/13->	RTJC

Engine	Information	A10	A20	A40	A50	A70	C10 - C30		C20	E01
All engines	x 1, D.I.S.						9.6381	C10		
All engines										4.7242

				ENGINE
1.4 LPG	Petrol/ Liquified Petro-leum Gas (LPG)	66	10/12->	RTJC

Engine	Information	A10	A20	A40	A50	A70	C10 - C30		C20	E01
All engines	x 1, D.I.S.						9.6381	C10		
All engines										4.7242

				ENGINE
1.6 Ti	Petrol	77	10/12->	IQJA, IQJC

Engine	Information	A10	A20	A40	A50	A70	C10 - C30		C20	E01
All engines	x 1, D.I.S.						9.6381	C10		
Eng. IQJA										4.7242

CAPRI III

				ENGINE
1.3	Petrol	40	01/78-06/85	J1E

Engine	Information	A10	A20	A40	A50	A70	C10 - C30		C20	E01
All engines	version Bosch			2.7479PHT	3.7512RS					

C-MAX I

				ENGINE
1.6	Petrol	74	02/07-09/10	HWDA, HWDB, SHDA, SHDB, SHDC

Engine	Information	A10	A20	A40	A50	A70	C10 - C30		C20	E01
All engines	x 1, D.I.S.						9.6381	C10		
All engines										4.7242

				ENGINE
1.6	Petrol	85	04/07-09/10	HXDA, HXDB, SIDA

Engine	Information	A10	A20	A40	A50	A70	C10 - C30		C20	E01
All engines	x 1, D.I.S.						9.6381	C10		

				ENGINE
1.8	Petrol	90	02/07-09/10	QQDC

Engine	Information	A10	A20	A40	A50	A70	C10 - C30		C20	E01
All engines	x 4, COIL ON PLUG						9.6380	C10		

A10	CONDENSER	A20	CONTACT SET	A40	DISTRIBUTOR CAP	A50	ROTOR	A70	PICK-UP
C10	COIL	C20	IGNITION MODULE	C30	ELECTRONIC IGNITION KIT	E01	IGNITION CABLE SET		

The present application list is a brief version. For the detailed information about the possibility of installation on a specific vehicle, please refer to our web-catalogue http://catalogo.facet.eu/

Vehicle	alim.	kW	Date	Engine	FUNCTIONS ON THE VEHICLE: A10	A20	A40	A50	A70	C10 - C30	C20	E01
1.8	Petrol	92	02/07-09/10	QQDA, QQDB						9.6380 C10		
1.8 Flexifuel	Petrol/ Ethanol	92	02/07-09/10	Q7DA						9.6380 C10		
2.0	Petrol	107	02/07-09/10	AODA, AODB, AODE, SYDA						9.6380 C10		
2.0 CNG	Petrol/ Compressed Natural Gas (CNG)	107	04/09-09/10	SYDA						9.6380 C10		
2.0 LPG	Petrol/ Liquified Petroleum Gas (LPG)	107	06/08-09/10	SYDA						9.6380 C10		

Engine	Information	A10	A20	A40	A50	A70	C10 - C30	C20	E01
All engines	x 4, COIL ON PLUG						9.6380 C10		

C-MAX II

1.0 EcoBoost	Petrol	74	10/12-06/19	M2DA, M2DC, SFDA						9.6519 C10		
1.0 Ecoboost	Petrol	88	10/12->	--						9.6519 C10		
1.0 EcoBoost	Petrol	92	10/12-06/19	M1DA, M1DD						9.6519 C10		
1.5 16V	Petrol	0	03/15->	--						9.6523 C10		
1.5 EcoBoost	Petrol	110	03/15-06/19	M8DB, M8DF						9.6523 C10		
1.5 EcoBoost	Petrol	134	03/15-06/19	M9DB						9.6523 C10		
1.6 CNG	Petrol/ Compressed Natural Gas (CNG)	86	01/13-12/14	MUDA						9.6381 C10		

Engine	Information	A10	A20	A40	A50	A70	C10 - C30	C20	E01
Eng. M2DA, M2DC	->year 01/06/15, x 3, COIL ON PLUG						9.6519 C10		
Eng. SFDA	Qty: 3						9.6519 C10		
All engines	Qty: 3						9.6519 C10		
All engines	->year 01/06/15, x 3, COIL ON PLUG						9.6519 C10		
All engines	Qty: 4						9.6523 C10		
All engines	x 4, COIL ON PLUG						9.6523 C10		
All engines	x 4, COIL ON PLUG						9.6523 C10		
All engines	x 1, D.I.S.						9.6381 C10		

A10	CONDENSER	A20	CONTACT SET	A40	DISTRIBUTOR CAP	A50	ROTOR	A70	PICK-UP
C10	COIL	C20	IGNITION MODULE	C30	ELECTRONIC IGNITION KIT	E01	IGNITION CABLE SET		

The present application list is a brief version. For the detailed information about the possibility of installation on a specific vehicle, please refer to our web-catalogue http://catalogo.facet.eu/

Vehicle	alim.	kW	Date	Engine	FUNCTIONS ON THE VEHICLE: A10	A20	A40	A50	A70	C10 - C30	C20	E01
1.6 Flexifuel	Petrol/ Ethanol	88	02/11-06/19	**MUDA, MUDD**								
All engines	x 1, D.I.S.									9.6381 C10		
1.6 LPG	Petrol/ Liquified Petro-leum Gas (LPG)	86	02/12-06/19	**MUDA, MUDD**								
All engines	x 1, D.I.S.									9.6381 C10		
1.6 LPG	Petrol/ Liquified Petro-leum Gas (LPG)	88	02/12-06/19	**MUDA, MUDD**								
All engines	x 1, D.I.S.									9.6381 C10		
1.6 Ti	Petrol	63	12/10-06/19	**XTDA, XTDB**								
All engines	x 1, D.I.S.									9.6381 C10		
Eng. XTDA												4.7242
1.6 Ti	Petrol	77	10/10-06/19	**IQDA, IQDB**								
All engines	x 1, D.I.S.									9.6381 C10		
All engines												4.7242
1.6 Ti	Petrol	88	02/12-06/19	**MUDA, MUDD**								
All engines	x 1, D.I.S.									9.6381 C10		
1.6 Ti	Petrol	92	12/10-06/19	**PNDA, PNDD**								
All engines	x 1, D.I.S.									9.6381 C10		
Eng. PNDA												4.7242
CORSAIR												
1.5	Petrol	40	10/63-09/65	**EV 15 N**								
All engines							2.8070	3.8106				
1.5	Petrol	43	10/63-09/65	**EV 15 LN**								
All engines							2.8070	3.8106				
1.5 GT	Petrol	56	10/63-09/65	**EV 15 LH**								
All engines							2.8070	3.8106				
CORTINA												
1200	Petrol	34	10/62-09/66	--								
All engines						1.4683MHDV	2.8070, 2.8075	3.8106				
1200	Petrol	35	10/62-09/66	--								
All engines						1.4683MHDV	2.8070, 2.8075	3.8106				

A10	CONDENSER	**A20**	CONTACT SET	**A40**	DISTRIBUTOR CAP	**A50**	ROTOR	**A70**	PICK-UP
C10	COIL	**C20**	IGNITION MODULE	**C30**	ELECTRONIC IGNITION KIT	**E01**	IGNITION CABLE SET		

The present application list is a brief version. For the detailed information about the possibility of installation on a specific vehicle, please refer to our web-catalogue http://catalogo.facet.eu/

Vehicle	alim.	kW	Date	Engine	FUNCTIONS ON THE VEHICLE A10	A20	A40	A50	A70	C10 - C30	C20	E01
1300	Petrol	42	10/70-03/72	**KL 13 H**								

Engine	Information	A10	A20	A40	A50	A70	C10 - C30	C20	E01
All engines	version Ford		1.4143HDV	2.7783	3.7885				
All engines	version Bosch			2.7509PHT	3.7525RS				
All engines									4.9078

1500	Petrol	43	10/62-09/66	--

Engine	Information	A10	A20	A40	A50	A70	C10 - C30	C20	E01
All engines			1.4683MHDV	2.8070, 2.8075	3.8106				

1500 GT	Petrol	56	10/62-09/66	--

Engine	Information	A10	A20	A40	A50	A70	C10 - C30	C20	E01
All engines				2.8070, 2.8075	3.8106				

GT	Petrol	56	10/62-09/66	--

Engine	Information	A10	A20	A40	A50	A70	C10 - C30	C20	E01
All engines			1.4683MHDV	2.8070, 2.8075	3.8106				

Lotus	Petrol	78	10/62-09/70	--

Engine	Information	A10	A20	A40	A50	A70	C10 - C30	C20	E01
All engines					3.8106				

Lotus Spezial	Petrol	103	10/62-09/66	--

Engine	Information	A10	A20	A40	A50	A70	C10 - C30	C20	E01
All engines					3.8106				

COUGAR

2.0 16V	Petrol	96	08/98-12/01	EDBA, EDBB, EDBC, EDBD

Engine	Information	A10	A20	A40	A50	A70	C10 - C30	C20	E01
All engines	x 1, D.I.S.						9.6432 C10		
All engines									4.9624

2.5 ST 200	Petrol	151	01/00-12/01	SGA

Engine	Information	A10	A20	A40	A50	A70	C10 - C30	C20	E01
All engines	->year 01/09/00, x 1, D.I.S.						9.6070 C10		

2.5 V6 24V	Petrol	125	08/98-12/01	JP25LCBD, LCBA, LCBB, LCBC, LCBE

Engine	Information	A10	A20	A40	A50	A70	C10 - C30	C20	E01
All engines	->year 01/09/00, x 1, D.I.S.						9.6070 C10		
Eng. LCBB, LCBC, LCBE							9.6070 C10		

ECOSPORT

1.0 EcoBoost	Petrol	103	03/16->	YYJD, YYJF

Engine	Information	A10	A20	A40	A50	A70	C10 - C30	C20	E01
All engines	x 3, COIL ON PLUG						9.6519 C10		

1.0 EcoBoost	Petrol	74	04/18->	SFJL

Engine	Information	A10	A20	A40	A50	A70	C10 - C30	C20	E01
All engines	x 3, COIL ON PLUG						9.6519 C10		

1.0 EcoBoost	Petrol	92	10/13->	M1JC, M1JJ, M1JU

Engine	Information	A10	A20	A40	A50	A70	C10 - C30	C20	E01
All engines	x 3, COIL ON PLUG						9.6519 C10		

1.5 Ti	Petrol	82	10/13->	UEJB, UEJE

Engine	Information	A10	A20	A40	A50	A70	C10 - C30	C20	E01
All engines	x 1, D.I.S.						9.6381 C10		

A10	CONDENSER	A20	CONTACT SET	A40	DISTRIBUTOR CAP	A50	ROTOR	A70	PICK-UP
C10	COIL	C20	IGNITION MODULE	C30	ELECTRONIC IGNITION KIT	E01	IGNITION CABLE SET		

The present application list is a brief version. For the detailed information about the possibility of installation on a specific vehicle, please refer to our web-catalogue http://catalogo.facet.eu/

Vehicle	alim.	kW	Date	Engine	FUNCTIONS ON THE VEHICLE: A10	A20	A40	A50	A70	C10 - C30	C20	E01
1.5 Ti-VCT	Petrol	81	10/13->	**UEJB, UEJE**								
All engines	x 1, D.I.S.									9.6381 C10		
1.6 Ti-VCT	Petrol	90	08/12->	**HXJD, IQJB**								
All engines	x 1, D.I.S.									9.6381 C10		
2.0 4x4	Petrol	103	08/12->	**C20HDEA**								
All engines	x 4, COIL ON PLUG									9.6380 C10		
ESCORT I												
RS 1600	Petrol	84	01/70-10/74	--								
All engines							2.8075	3.8106				
RS 1600	Petrol	90	01/70-10/74	**BDA**								
All engines							2.8075	3.8106				
Twin Cam	Petrol	80	03/68-08/71	**K5**								
All engines								3.8106				
ESCORT II												
1.6 RS	Petrol	62	12/74-08/80	**LC**								
All engines							2.8075	3.8106				
1.8	Petrol	115	12/74-08/80	--								
All engines							2.8075	3.8106				
RS 1800	Petrol	92	03/75-08/77	**KL 18 S**								
All engines							2.8075	3.8106				
ESCORT III												
1.1	Petrol	37	08/83-07/90	**GSE, GSG**								
Eng. GSE	version Bosch					1.2549HDVS	2.7479PHT	3.7525RS				
Eng. GSG												4.9007
1.3	Petrol	46	07/88-07/90	**JBA**								
All engines										9.6212 C10		
1.3	Petrol	51	09/80-02/86	**JPA**								
All engines	version Lucas						2.8083PHT					
All engines	version Bosch							3.7560RS				
All engines										9.6069 C10		
1.4 i	Petrol	54	02/86-07/90	**F6B, F6D, FUC**								
All engines	version Bosch						2.7479PHT					
Eng. F6D, FUC	version Lucas						2.8096PHT	3.8126RS				
Eng. F6D, FUC	version Bosch							3.7561RS				
Eng. F6B	version Bosch							3.7573/21RS				

A10	CONDENSER	**A20**	CONTACT SET	**A40**	DISTRIBUTOR CAP	**A50**	ROTOR	**A70**	PICK-UP
C10	COIL	**C20**	IGNITION MODULE	**C30**	ELECTRONIC IGNITION KIT	**E01**	IGNITION CABLE SET		

The present application list is a brief version. For the detailed information about the possibility of installation on a specific vehicle, please refer to our web-catalogue http://catalogo.facet.eu/

Vehicle	alim.	kW	Date	Engine	FUNCTIONS ON THE VEHICLE A10	A20	A40	A50	A70	C10 - C30	C20	E01
1.4 i	Petrol	54	02/86-07/90	**ENGINE F6B, F6D, FUC**								
Engine: All engines	Information:									9.6069, 9.6212 C10		
Engine: Eng. F6D, FUC	Information:											4.9281
1.6	Petrol	58	09/80-12/85	**ENGINE LP1, LPA**								
Engine: All engines	Information: version Lucas						2.8083PHT					
Engine: All engines	Information: version Bosch							3.7560RS				
Engine: All engines	Information:									9.6069 C10		
1.6 i	Petrol	77	09/83-12/85	**ENGINE LR1**								
Engine: All engines	Information: version Bosch							3.7573/12RS				
Engine: All engines	Information:									9.6069 C10		
1.6 XR3i	Petrol	77	10/82-12/85	**ENGINE LR1, LRA**								
Engine: All engines	Information: version Bosch							3.7573/12RS				
Engine: All engines	Information:									9.6069 C10		
ESCORT IV												
1.1	Petrol	37	12/85-07/90	**ENGINE GSG**								
Engine: All engines	Information:											4.9007
1.3	Petrol	44	01/95-08/97	**ENGINE J6A, JBD**								
Engine: All engines	Information: x 1, D.I.S.									9.6035 C10		
1.3	Petrol	46	07/88-12/94	**ENGINE JBA, JBD**								
Engine: All engines	Information:									9.6212 C10		
1.4	Petrol	52	07/90-12/94	**ENGINE F6F, F6G**								
Engine: All engines	Information:									9.6035, 9.6212 C10		4.8864
1.4	Petrol	54	01/86-08/00	**ENGINE F4B, F6B, F6D, FUC**								
Engine: Eng. F6B, F6D, FUC	Information: version Bosch						2.7479PHT					
Engine: Eng. F6D, FUC	Information: version Lucas						2.8096PHT	3.8126RS				
Engine: Eng. F6D, FUC	Information: version Bosch							3.7561RS				
Engine: Eng. F6B	Information: version Bosch							3.7573/21RS				
Engine: Eng. F4B	Information: x 1, D.I.S.									9.6035 C10		
Engine: Eng. F6B, F6D, FUC	Information:									9.6069, 9.6212 C10		
Engine: Eng. F4B	Information:											4.8864
Engine: Eng. F6D, FUC	Information:											4.9281
1.4	Petrol	55	01/86-07/90	**ENGINE FUA**								
Engine: All engines	Information: version Bosch						2.7479PHT	3.7561RS				
Engine: All engines	Information: version Lucas						2.8096PHT	3.8126RS				
Engine: All engines	Information:									9.6069, 9.6212 C10		
1.6	Petrol	65	04/89-07/90	**ENGINE LUG**								
Engine: All engines	Information:									9.6212 C10		

A10	CONDENSER	**A20**	CONTACT SET	**A40**	DISTRIBUTOR CAP	**A50**	ROTOR	**A70**	PICK-UP
C10	COIL	**C20**	IGNITION MODULE	**C30**	ELECTRONIC IGNITION KIT	**E01**	IGNITION CABLE SET		

The present application list is a brief version. For the detailed information about the possibility of installation on a specific vehicle, please refer to our web-catalogue http://catalogo.facet.eu/

Vehicle	alim.	kW	Date	Engine	FUNCTIONS ON THE VEHICLE A10	A20	A40	A50	A70	C10 - C30	C20	E01
1.6 16V	Petrol	66	10/98-07/00	L1E, L1K								
Eng. L1E												4.9630
1.6 i	Petrol	66	01/86-07/90	L4B								
All engines										9.6212 C10		
1.6 Turbo RS	Petrol	97	01/86-07/90	LNB								
All engines				version Bosch			2.7479PHT	3.7573/21RS	8.2733			
All engines										9.6069, 9.6212 C10		
1.6 XR3i	Petrol	77	01/86-07/90	LR2, LRB								
All engines				version Bosch			2.7479PHT					
All engines				+catalytic converter, version Bosch				3.7573/21RS				
All engines										9.6069, 9.6212 C10		4.9281
ESCORT V												
1.3	Petrol	44	07/90-01/95	J4B, J6A, JBE								
Eng. J4B, J6A										9.6212 C10		
All engines										9.6264 C10		
Eng. J6A, JBE												4.9007
1.4	Petrol	52	07/90-01/95	F6F, F6G								
All engines										9.6035, 9.6212 C10		4.8864
1.4	Petrol	55	09/90-01/95	F4B, FUH								
All engines										9.6035, 9.6212 C10		4.8864
1.4 i	Petrol	55	07/93-01/95	F4B								
All engines										9.6035, 9.6212 C10		4.8864
1.6	Petrol	66	07/90-08/92	LUJ, LUK								
All engines										9.6035, 9.6212 C10		4.8864
1.6	Petrol	77	07/90-08/93	LJF								
All engines										9.6035, 9.6212 C10		4.8864
1.6 16V XR3i	Petrol	66	12/92-01/95	L1E								
All engines										9.6199, 9.6212 C10		4.9630
1.6 i 16V	Petrol	65	01/94-01/95	L1H								
All engines										9.6199, 9.6212 C10		4.9630
1.6 i 16V	Petrol	66	09/92-01/95	L1E, L1K								
All engines										9.6199, 9.6212 C10		4.9630

A10	CONDENSER	A20	CONTACT SET	A40	DISTRIBUTOR CAP	A50	ROTOR	A70	PICK-UP
C10	COIL	C20	IGNITION MODULE	C30	ELECTRONIC IGNITION KIT	E01	IGNITION CABLE SET		

The present application list is a brief version. For the detailed information about the possibility of installation on a specific vehicle, please refer to our web-catalogue http://catalogo.facet.eu/

Vehicle	alim.	kW	Date	Engine	FUNCTIONS ON THE VEHICLE A10	A20	A40	A50	A70	C10 - C30	C20	E01
1.8 16V	Petrol	77	02/92-01/95	ENGINE RDA								
Engine: All engines	Information:									9.6199 C10		4.9630
1.8 16V XR3i	Petrol	77	02/92-01/95	ENGINE RDA								
Engine: All engines	Information:									9.6199 C10		4.9630
1.8 16V XR3i	Petrol	96	02/92-01/95	ENGINE 99BFR1740								
Engine: All engines	Information:									9.6199, 9.6212 C10		4.9630
1.8 i 16V	Petrol	77	09/92-01/95	ENGINE RDA								
Engine: All engines	Information:									9.6199, 9.6212 C10		4.9630
1.8 i 16V	Petrol	96	02/93-01/95	ENGINE 99BFR1740								
Engine: All engines	Information:									9.6199, 9.6212 C10		4.9630
1.8 XR3i 16V 4x4	Petrol	77	08/93-01/95	ENGINE RDA								
Engine: All engines	Information:									9.6199 C10		4.9630
1.8 XR3i 16V 4x4	Petrol	96	08/93-01/95	ENGINE 99BFR1740								
Engine: All engines	Information:									9.6199, 9.6212 C10		4.9630
RS 2000	Petrol	110	05/91-01/95	ENGINE N7A								
Engine: All engines	Information:											4.9145
RS Cosworth 4x4	Petrol	162	10/91-01/95	ENGINE N5F								
Engine: All engines	Information: ->year 01/06/94, -catalytic converter, version Marelli						2.8198PHT					
Engine: All engines	Information: +catalytic converter, ->year 01/06/94, version Marelli						2.8201PHT					
Engine: All engines	Information: ->year 01/06/94, version Marelli							3.8257RS				
Engine: All engines	Information: ->year 30/06/94									9.6069 C10		
ESCORT VI												
1.3	Petrol	44	01/95-02/99	ENGINE J4B, J6A								
Engine: Eng. J6A	Information:									9.6212, 9.6264 C10		4.9007
Engine: All engines	Information: x 1, D.I.S.									9.6432 C10		
Engine: Eng. J4B	Information: 01/10/98 ->											4.9568
Engine: Eng. J4B	Information: ->year 30/09/98											4.9639
1.4	Petrol	54	01/95-12/99	ENGINE F4B								
Engine: All engines	Information: x 1, D.I.S.									9.6035 C10		
Engine: All engines	Information:											4.8864
1.4	Petrol	55	01/95-02/99	ENGINE F4B, F6B, F6D, FUH								
Engine: All engines	Information: x 1, D.I.S.									9.6035 C10		
Engine: Eng. F4B	Information:									9.6035, 9.6212 C10		4.8864
1.6 16V	Petrol	66	01/95-07/00	ENGINE L1E, L1K								
Engine: All engines	Information: x 1, D.I.S.									9.6432 C10		

A10	CONDENSER	A20	CONTACT SET	A40	DISTRIBUTOR CAP	A50	ROTOR	A70	PICK-UP
C10	COIL	C20	IGNITION MODULE	C30	ELECTRONIC IGNITION KIT	E01	IGNITION CABLE SET		

The present application list is a brief version. For the detailed information about the possibility of installation on a specific vehicle, please refer to our web-catalogue http://catalogo.facet.eu/

Vehicle	alim.	kW	Date	Engine	FUNCTIONS ON THE VEHICLE A10	A20	A40	A50	A70	C10 - C30	C20	E01
1.6 16V	Petrol	66	01/95-07/00	**L1E, L1K**								
Eng. L1E												4.9630
1.6 16V 4x4	Petrol	66	01/95-10/98	**L1E**								
All engines	x 1, D.I.S.									9.6432 C10		
All engines												4.9630
1.6 16V XR3i	Petrol	65	02/95-12/96	**L1H**								
All engines	x 1, D.I.S.									9.6432 C10		
All engines												4.9630
1.6 16V XR3i	Petrol	66	02/95-09/99	**L1E, L1K**								
All engines	x 1, D.I.S.									9.6432 C10		
Eng. L1E												4.9630
1.6 i 16V	Petrol	65	01/95-08/95	**L1H**								
All engines	x 1, D.I.S.									9.6432 C10		
All engines												4.9630
1.6 i 16V	Petrol	66	01/95-02/99	**L1E, L1K**								
All engines	x 1, D.I.S.									9.6432 C10		
All engines												4.9630
1.8 16V	Petrol	77	01/95-08/95	**RDA**								
All engines	x 1, D.I.S.									9.6432 C10		
All engines												4.9630
1.8 16V	Petrol	85	01/95-02/99	**RKC**								
All engines	x 1, D.I.S.									9.6432 C10		
All engines												4.9630
1.8 16V XR3i	Petrol	77	02/95-08/98	**RDA**								
All engines	x 1, D.I.S.									9.6432 C10		
All engines												4.9630
1.8 16V XR3i	Petrol	85	10/95-08/98	**RKC**								
All engines	x 1, D.I.S.									9.6432 C10		
All engines												4.9630
1.8 16V XR3i	Petrol	96	02/95-08/00	**RQB**								
All engines	x 1, D.I.S.									9.6432 C10		
RS 2000	Petrol	110	02/95-02/98	**N7A**								
All engines												4.9145
RS 2000 4x4	Petrol	110	02/95-10/98	**N7A**								
All engines												4.9145

A10	CONDENSER	**A20**	CONTACT SET	**A40**	DISTRIBUTOR CAP	**A50**	ROTOR	**A70**	PICK-UP
C10	COIL	**C20**	IGNITION MODULE	**C30**	ELECTRONIC IGNITION KIT	**E01**	IGNITION CABLE SET		

The present application list is a brief version. For the detailed information about the possibility of installation on a specific vehicle, please refer to our web-catalogue http://catalogo.facet.eu/

Vehicle	alim.	kW	Date	Engine	FUNCTIONS ON THE VEHICLE A10	A20	A40	A50	A70	C10 - C30	C20	E01

ESCORT-NOMADE

				ENGINE
1.6	Petrol	66	01/95-04/00	8LH7(98CUL4), ZH16L1E

Engine	Information	A10	A20	A40	A50	A70	C10 - C30	C20	E01
All engines	x 1, D.I.S.						9.6432 C10		

				ENGINE
1.8	Petrol	77	01/95-04/00	0LW2(273CUV8)

Engine	Information	A10	A20	A40	A50	A70	C10 - C30	C20	E01
All engines	x 1, D.I.S.						9.6432 C10		

FIESTA

				ENGINE
1.2	Petrol	55	01/96-04/02	DHA, DHB, DHC, DHD, DHF, DHG

Engine	Information	A10	A20	A40	A50	A70	C10 - C30	C20	E01
All engines	->year 01/05/98, x 1, D.I.S.						9.6199S C10		
All engines	01/06/98 ->, x 1, D.I.S.						9.6432 C10		

				ENGINE
1.3	Petrol	44	09/95-08/03	J4C, J4J, J4R

Engine	Information	A10	A20	A40	A50	A70	C10 - C30	C20	E01
All engines	x 1, D.I.S.						9.6432 C10		

FIESTA I

				ENGINE
0.9	Petrol	29	05/76-08/83	TKA, TKW

Engine	Information	A10	A20	A40	A50	A70	C10 - C30	C20	E01
All engines	version Bosch		1.2549HDVS	2.7479PHT	3.7525RS				
All engines	version Ford		1.4143HDV	2.7783	3.7885				

				ENGINE
0.9	Petrol	33	05/76-08/83	TLA

Engine	Information	A10	A20	A40	A50	A70	C10 - C30	C20	E01
All engines	version Bosch		1.2549HDVS	2.7479PHT	3.7525RS				
All engines	version Ford		1.4143HDV	2.7783	3.7885				

				ENGINE
1.1	Petrol	39	05/76-08/83	GLA

Engine	Information	A10	A20	A40	A50	A70	C10 - C30	C20	E01
All engines	version Bosch		1.2549HDVS	2.7479PHT	3.7525RS				

				ENGINE
1.1	Petrol	40	02/81-08/83	GLW

Engine	Information	A10	A20	A40	A50	A70	C10 - C30	C20	E01
All engines	version Bosch		1.2549HDVS	2.7479PHT	3.7525RS				

				ENGINE
1.3	Petrol	49	08/77-08/83	J3E

Engine	Information	A10	A20	A40	A50	A70	C10 - C30	C20	E01
All engines	version Ford		1.4143HDV	2.7783					

				ENGINE
1.6 XR2	Petrol	62	08/81-08/83	L3E

Engine	Information	A10	A20	A40	A50	A70	C10 - C30	C20	E01
All engines	version Bosch			2.7479PHT	3.7525RS				

FIESTA II

				ENGINE
1.1	Petrol	36	05/86-02/89	GSH

Engine	Information	A10	A20	A40	A50	A70	C10 - C30	C20	E01
All engines	version Bosch			2.7479PHT	3.7561RS				

				ENGINE
1.1	Petrol	37	09/83-02/89	GLC, GSF

Engine	Information	A10	A20	A40	A50	A70	C10 - C30	C20	E01
All engines	version Bosch		1.2549HDVS	2.7479PHT	3.7525RS				

				ENGINE
1.3	Petrol	51	09/83-09/89	JPC

Engine	Information	A10	A20	A40	A50	A70	C10 - C30	C20	E01
All engines	version Bosch			2.7479PHT	3.7525RS				

A10	CONDENSER	A20	CONTACT SET	A40	DISTRIBUTOR CAP	A50	ROTOR	A70	PICK-UP
C10	COIL	C20	IGNITION MODULE	C30	ELECTRONIC IGNITION KIT	E01	IGNITION CABLE SET		

The present application list is a brief version. For the detailed information about the possibility of installation on a specific vehicle, please refer to our web-catalogue http://catalogo.facet.eu/

Vehicle	alim.	kW	Date	Engine	FUNCTIONS ON THE VEHICLE A10	A20	A40	A50	A70	C10 - C30	C20	E01
1.4	Petrol	52	10/86-02/89	ENGINE F6A, F6C								
All engines										9.6212 C10		
1.4	Petrol	54	02/87-02/89	ENGINE FUD								
All engines	version Bosch						2.7479PHT	3.7561RS				
All engines										9.6069 C10		4.9281
1.4	Petrol	55	10/85-11/89	ENGINE FUB								
All engines	version Bosch						2.7479PHT	3.7561RS				
All engines										9.6069 C10		4.9281
1.6 XR2	Petrol	70	03/84-02/89	ENGINE LUD								
All engines	version Lucas						2.8096PHT	3.8126RS				
All engines										9.6069 C10		4.9281
1.6 XR2	Petrol	71	04/84-02/89	ENGINE LUB								
All engines	version Lucas						2.8096PHT	3.8126RS				
All engines										9.6069 C10		4.9281
FIESTA III												
1.0	Petrol	33	03/89-12/95	ENGINE TLB								
All engines										9.6264 C10		4.9007
1.1	Petrol	37	03/89-12/95	ENGINE G6A								
All engines										9.6212, 9.6264 C10		4.9007
1.1	Petrol	40	03/89-12/95	ENGINE GUD, GUE								
All engines										9.6212, 9.6264 C10		4.9007
1.3	Petrol	44	03/89-02/96	ENGINE J6B, JBB, JBC								
Eng. J6B, JBC										9.6212 C10		
All engines										9.6264 C10		4.9007
1.3 Cat	Petrol	44	05/91-01/97	ENGINE J6B								
All engines										9.6212, 9.6264 C10		4.9007
1.4	Petrol	52	03/89-12/95	ENGINE F6E								
All engines	version Bosch						2.7479PHT	3.7573/21RS				
All engines	version Lucas						2.8096PHT	3.8126RS				
All engines										9.6069, 9.6212 C10		4.9281
1.4	Petrol	54	03/89-12/95	ENGINE FUG, FUJ								
All engines										9.6035, 9.6212 C10		4.8864
1.4 Cat	Petrol	54	03/89-12/95	ENGINE F4A								
All engines										9.6035, 9.6212 C10		4.8864

A10	CONDENSER	A20	CONTACT SET	A40	DISTRIBUTOR CAP	A50	ROTOR	A70	PICK-UP
C10	COIL	C20	IGNITION MODULE	C30	ELECTRONIC IGNITION KIT	E01	IGNITION CABLE SET		

The present application list is a brief version. For the detailed information about the possibility of installation on a specific vehicle, please refer to our web-catalogue http://catalogo.facet.eu/

Vehicle	alim.	kW	Date	Engine	FUNCTIONS ON THE VEHICLE A10	A20	A40	A50	A70	C10 - C30	C20	E01
1.6	Petrol	65	01/89-01/94	LUH								
Engine: All engines — Information:										9.6035, 9.6212 C10		4.8864
1.6	Petrol	66	03/89-12/92	LUH								
Engine: All engines — Information:										9.6035 C10		4.8864
1.6 i 16V	Petrol	65	01/94-12/95	L1G								
Engine: All engines — Information:										9.6199, 9.6212 C10		4.9630
1.6 Turbo	Petrol	96	03/90-10/92	LHA								
Engine: All engines — Information:										9.6035, 9.6212 C10		
1.6 XR2i	Petrol	76	03/89-03/93	LJD								
Engine: All engines — Information:										9.6035, 9.6212 C10		
1.6 XR2i	Petrol	81	03/89-01/94	LJC								
Engine: All engines — Information:										9.6035, 9.6212 C10		
1.8 16V	Petrol	77	02/92-12/95	RDB								
Engine: All engines — Information:										9.6199, 9.6212 C10		4.9630
1.8 XR2i 16V	Petrol	96	02/92-12/95	RQC								
Engine: All engines — Information:										9.6199, 9.6212 C10		4.9630
FIESTA IV												
1.0 i	Petrol	38	04/96-09/99	0EAL								
Engine: All engines — Information: ->year 30/09/98										9.6264 C10		4.9639
Engine: All engines — Information: 01/10/98 ->										9.6432 C10		4.9568
1.25 i 16V	Petrol	55	08/95-01/02	DHA, DHB, DHC, DHD, DHE, DHF, DHG								
Engine: All engines — Information: ->year 01/05/98, x 1, D.I.S.										9.61995 C10		
Engine: All engines — Information: 01/06/98 ->, x 1, D.I.S.										9.6432 C10		
Engine: All engines — Information: ->year 31/05/98												4.9619
Engine: All engines — Information: 01/06/98 ->												4.9625
1.3	Petrol	44	02/96-08/03	J4C								
Engine: All engines — Information: 01/10/98 ->												4.9568
Engine: All engines — Information: ->year 30/09/98												4.9639
1.3 i	Petrol	37	08/95-01/02	JJA, JJC, JJE, JJJ, JJK, JJM								
Engine: All engines — Information: x 1, D.I.S.										9.6432 C10		
Engine: All engines — Information: 01/10/98 ->												4.9568
Engine: All engines — Information: ->year 30/09/98												4.9639
1.3 i	Petrol	44	08/95-01/02	J4C, J4J, J4L, J4Q, J4R, J4T, JBC								
Engine: Eng. JBC — Information:										9.6212 C10		

A10	CONDENSER	A20	CONTACT SET	A40	DISTRIBUTOR CAP	A50	ROTOR	A70	PICK-UP
C10	COIL	C20	IGNITION MODULE	C30	ELECTRONIC IGNITION KIT	E01	IGNITION CABLE SET		

The present application list is a brief version. For the detailed information about the possibility of installation on a specific vehicle, please refer to our web-catalogue http://catalogo.facet.eu/

Vehicle	alim.	kW	Date	Engine	FUNCTIONS ON THE VEHICLE A10	A20	A40	A50	A70	C10 - C30	C20	E01
1.3 i	Petrol	44	08/95-01/02	J4C, J4J, J4L, J4Q, J4R, J4T, JBC								

Engine	Information	A10	A20	A40	A50	A70	C10 - C30		C20	E01
Eng. JBC	->year 30/09/98						9.6264	C10		
Eng. J4C, J4J, J4L, J4Q, J4R, J4T	x 1, D.I.S.						9.6432	C10		
Eng. JBC	01/10/98 ->						9.6432	C10		
All engines	01/10/98 ->									4.9568
All engines	->year 30/09/98									4.9639

Vehicle	alim.	kW	Date	Engine
1.4	Petrol	66	08/98-04/02	FHA

Engine	Information	A10	A20	A40	A50	A70	C10 - C30		C20	E01
All engines	x 1, D.I.S.						9.6432	C10		

Vehicle	alim.	kW	Date	Engine
1.4 i 16V	Petrol	66	04/96-01/02	FHA, FHE

Engine	Information	A10	A20	A40	A50	A70	C10 - C30		C20	E01
All engines	x 1, D.I.S.						9.6432	C10		
All engines	->year 31/05/98									4.9619
All engines	01/06/98 ->									4.9625

Vehicle	alim.	kW	Date	Engine
1.6 16V Sport	Petrol	76	02/00-01/02	L1T, L1V

Engine	Information	A10	A20	A40	A50	A70	C10 - C30		C20	E01
All engines	x 1, D.I.S.						9.6432	C10		
All engines										4.9625

FIESTA V

Vehicle	alim.	kW	Date	Engine
1.25 16V	Petrol	51	03/03-06/08	M7JA, M7JB

Engine	Information	A10	A20	A40	A50	A70	C10 - C30		C20	E01
All engines	01/03/05 ->, x 1, D.I.S.						9.6381	C10		
All engines	->year 01/02/05, x 1, D.I.S.						9.6432	C10		
All engines	01/02/07 ->									4.7242
All engines	->year 01/02/07									4.9625

Vehicle	alim.	kW	Date	Engine
1.25 16V	Petrol	55	05/02-06/08	FUJA, FUJB

Engine	Information	A10	A20	A40	A50	A70	C10 - C30		C20	E01
All engines	01/03/05 ->, x 1, D.I.S.						9.6381	C10		
All engines	->year 01/02/05, x 1, D.I.S.						9.6432	C10		
All engines	01/02/07 ->									4.7242
All engines	->year 01/02/07									4.9625

Vehicle	alim.	kW	Date	Engine
1.3	Petrol	44	11/01-08/08	BAJA

Engine	Information	A10	A20	A40	A50	A70	C10 - C30		C20	E01
All engines	01/03/05 ->, x 1, D.I.S.						9.6381	C10		
All engines	->year 01/02/05, x 1, D.I.S.						9.6432	C10		
All engines	03/07/02 ->									4.7208

Vehicle	alim.	kW	Date	Engine
1.3	Petrol	51	11/01-06/08	A9JA, A9JB

Engine	Information	A10	A20	A40	A50	A70	C10 - C30		C20	E01
All engines	01/03/05 ->, 01/08/07 ->, x 1, D.I.S.						9.6381	C10		
Eng. A9JB	23/08/07 ->						9.6381	C10		
All engines	->year 01/02/05, ->year 01/07/07, x 1, D.I.S.						9.6432	C10		
Eng. A9JB	->year 23/08/07						9.6432	C10		
All engines	03/07/02 ->									4.7208

Vehicle	alim.	kW	Date	Engine
1.4	Petrol	59	05/02-09/05	FXJA

Engine	Information	A10	A20	A40	A50	A70	C10 - C30		C20	E01
All engines	01/03/05 ->, x 1, D.I.S.						9.6381	C10		
All engines	->year 01/02/05, x 1, D.I.S.						9.6432	C10		

Vehicle	alim.	kW	Date	Engine
1.4 16V	Petrol	59	11/01-06/08	FXJA, FXJB

Engine	Information	A10	A20	A40	A50	A70	C10 - C30		C20	E01
All engines	01/03/05 ->, x 1, D.I.S.						9.6381	C10		

A10	CONDENSER	A20	CONTACT SET	A40	DISTRIBUTOR CAP	A50	ROTOR	A70	PICK-UP
C10	COIL	C20	IGNITION MODULE	C30	ELECTRONIC IGNITION KIT	E01	IGNITION CABLE SET		

The present application list is a brief version. For the detailed information about the possibility of installation on a specific vehicle, please refer to our web-catalogue http://catalogo.facet.eu/

Vehicle	alim.	kW	Date	Engine	FUNCTIONS ON THE VEHICLE: A10	A20	A40	A50	A70	C10 - C30	C20	E01
1.4 16V	Petrol	59	11/01-06/08	FXJA, FXJB								

Engine	Information	A10	A20	A40	A50	A70	C10 - C30	C20	E01
All engines	->year 01/02/05, x 1, D.I.S.						9.6432 C10		
All engines	01/02/07 ->								4.7242
All engines	->year 01/02/07								4.9625

1.6 16V	Petrol	74	11/01-06/08	FYJA, FYJB

Engine	Information	A10	A20	A40	A50	A70	C10 - C30	C20	E01
All engines	01/03/05 ->, x 1, D.I.S.						9.6381 C10		
All engines	->year 01/02/05, x 1, D.I.S.						9.6432 C10		
All engines	01/02/07 ->								4.7242
All engines	->year 01/02/07								4.9625

ST150	Petrol	110	03/05-06/08	N4JB

Engine	Information	A10	A20	A40	A50	A70	C10 - C30	C20	E01
All engines	x 1, D.I.S.						9.6381 C10		
All engines	->year 01/02/05, x 1, D.I.S.						9.6432 C10		

FIESTA VI

1.0	Petrol	48	01/13->	XMJA, XMJB, XMJC, XMJD

Engine	Information	A10	A20	A40	A50	A70	C10 - C30	C20	E01
All engines	x 3, COIL ON PLUG						9.6519 C10		

1.0	Petrol	59	10/12->	P4JA, P4JB, P4JC, P4JD

Engine	Information	A10	A20	A40	A50	A70	C10 - C30	C20	E01
All engines	x 3, COIL ON PLUG						9.6519 C10		

1.0 EcoBoost	Petrol	103	05/14->	YYJA, YYJB

Engine	Information	A10	A20	A40	A50	A70	C10 - C30	C20	E01
All engines	x 3, COIL ON PLUG						9.6519 C10		

1.0 EcoBoost	Petrol	74	01/13->	SFJA, SFJB, SFJC, SFJD

Engine	Information	A10	A20	A40	A50	A70	C10 - C30	C20	E01
All engines	x 3, COIL ON PLUG						9.6519 C10		

1.0 EcoBoost	Petrol	92	09/12->	M1JE, M1JH

Engine	Information	A10	A20	A40	A50	A70	C10 - C30	C20	E01
All engines	Qty: 3						9.6519 C10		
All engines	x 3, COIL ON PLUG						9.6519 C10		

1.0 Sport	Petrol	103	05/14-04/17	YYJA, YYJB

Engine	Information	A10	A20	A40	A50	A70	C10 - C30	C20	E01
All engines	x 3, COIL ON PLUG						9.6519 C10		

1.25	Petrol	44	06/08->	STJA, STJB, STJC, STJD

Engine	Information	A10	A20	A40	A50	A70	C10 - C30	C20	E01
All engines	x 1, D.I.S.						9.6381 C10		
Eng. STJB							9.6381 C10		
Eng. STJA, STJB									4.7242

1.25	Petrol	60	06/08->	SNJA, SNJB, SNJC, SNJD

Engine	Information	A10	A20	A40	A50	A70	C10 - C30	C20	E01
All engines	x 1, D.I.S.						9.6381 C10		
All engines									4.7242

1.4	Petrol	66	10/08->	--

Engine	Information	A10	A20	A40	A50	A70	C10 - C30	C20	E01
All engines							9.6381 C10		4.7242

A10	CONDENSER	A20	CONTACT SET	A40	DISTRIBUTOR CAP	A50	ROTOR	A70	PICK-UP
C10	COIL	C20	IGNITION MODULE	C30	ELECTRONIC IGNITION KIT	E01	IGNITION CABLE SET		

The present application list is a brief version. For the detailed information about the possibility of installation on a specific vehicle, please refer to our web-catalogue http://catalogo.facet.eu/

Vehicle	alim.	kW	Date	Engine	FUNCTIONS ON THE VEHICLE A10	A20	A40	A50	A70	C10 - C30	C20	E01
1.4	Petrol	70	06/08->	--						9.6381 C10		4.7242
1.4	Petrol	71	10/08-12/12	24KH1CT5H1, 8MA1.77, RTJA, SPJA, SPJC, SPJE						9.6381 C10		4.7242
1.4 LPG	Petrol/ Liquified Petro-leum Gas (LPG)	68	01/09-04/17	RTJA, RTJB, RTJD						9.6381 C10		4.7242
1.4 LPG	Petrol/ Liquified Petro-leum Gas (LPG)	71	01/09-04/17	RTJA, RTJB, RTJD, SPJA, SPJC, SPJE						9.6381 C10		4.7242
1.6	Petrol	62	03/15->	XTJA						9.6381 C10		
1.6 Ti	Petrol	62	09/12->	--						9.6381 C10		4.7242
1.6 Ti	Petrol	77	09/12->	IQJA, IQJC, IQJE						9.6381 C10		4.7242
1.6 Ti	Petrol	88	06/08->	68GR-FKS, HXJA, HXJB, HXJE, RVJA						9.6381 C10		4.7242
1.6 Ti	Petrol	99	12/10->	U5JA						9.6381 C10		4.7242
1.6 Ti-VCT	Petrol	88	10/08-12/12	HXJA, HXJB						9.6381 C10		

Engine	Information	A10	A20	A40	A50	A70	C10 - C30	C20	E01
All engines							9.6381 C10		4.7242
Eng. 24KH1CT5H1, RTJA, SPJA, SPJC, SPJE	x 1, D.I.S.						9.6381 C10		
Eng. 8MA1.77, SPJC									4.7242
All engines	x 1, D.I.S.						9.6381 C10		
Eng. RTJA, RTJB									4.7242
All engines	x 1, D.I.S.						9.6381 C10		
Eng. RTJA, RTJB									4.7242
All engines	x 1, D.I.S.						9.6381 C10		
All engines	x 1, D.I.S.						9.6381 C10		
Eng. IQJA									4.7242
Eng. 68GR-FKS, HXJB							9.6381 C10		4.7242
Eng. HXJA, HXJB, HXJE, RVJA	x 1, D.I.S., x 1, D.I.S.						9.6381 C10		
All engines	x 1, D.I.S.						9.6381 C10		
All engines									4.7242
All engines	x 1, D.I.S.						9.6381 C10		

FIESTA VII

Vehicle	alim.	kW	Date	Engine
1.0 EcoBoost	Petrol	103	06/17->	YYJE, YYJG

Engine	Information	A10	A20	A40	A50	A70	C10 - C30	C20	E01
All engines	x 3, COIL ON PLUG						9.6519 C10		

A10	CONDENSER	A20	CONTACT SET	A40	DISTRIBUTOR CAP	A50	ROTOR	A70	PICK-UP
C10	COIL	C20	IGNITION MODULE	C30	ELECTRONIC IGNITION KIT	E01	IGNITION CABLE SET		

The present application list is a brief version. For the detailed information about the possibility of installation on a specific vehicle, please refer to our web-catalogue http://catalogo.facet.eu/

Vehicle	alim.	kW	Date	Engine	FUNCTIONS ON THE VEHICLE A10	A20	A40	A50	A70	C10 - C30	C20	E01
1.0 EcoBoost	Petrol	63	04/18->	ENGINE Q0JA, Q0JB, Q0JC, Q0JD								
Engine: All engines	Information: x 3, COIL ON PLUG									9.6519 C10		
1.0 EcoBoost	Petrol	74	05/17->	ENGINE SFJE, SFJF, SFJH, SFJJ, SFJK, SFJN, SFJP								
Engine: All engines	Information: x 3, COIL ON PLUG									9.6519 C10		
1.0 EcoBoost	Petrol	92	05/17->	ENGINE M1JL, M1JM, M1JP								
Engine: All engines	Information: x 3, COIL ON PLUG									9.6519 C10		
1.0 EcoBoost Active	Petrol	103	04/18->	ENGINE YYJE, YYJG								
Engine: All engines	Information: x 3, COIL ON PLUG									9.6519 C10		
1.0 EcoBoost Active	Petrol	74	04/18->	ENGINE SFJE, SFJF, SFJH, SFJJ, SFJK, SFJN, SFJP								
Engine: All engines	Information: x 3, COIL ON PLUG									9.6519 C10		
1.0 EcoBoost Active	Petrol	92	04/18->	ENGINE M1JL, M1JM, M1JP								
Engine: All engines	Information: x 3, COIL ON PLUG									9.6519 C10		
1.0 EcoBoost mHEV	Petrol/ Electric	114	07/20->	ENGINE BZJA								
Engine: All engines	Information: x 4, COIL ON PLUG									9.6519 C10		
1.0 EcoBoost mHEV Active	Petrol/ Electric	114	01/21->	ENGINE BZJA								
Engine: All engines	Information: x 4, COIL ON PLUG									9.6519 C10		
FOCUS C-MAX												
1.6	Petrol	74	10/03-03/07	ENGINE HWDA, HWDB, SHDA, SHDB, SHDC								
Engine: All engines	Information: 01/03/05 ->, x 1, D.I.S.									9.6381 C10		
Engine: All engines	Information: ->year 01/02/05, x 1, D.I.S.									9.6432 C10		
Engine: Eng. HWDA, HWDB	Information: 26/03/07 ->											4.7242
Engine: Eng. HWDA, HWDB	Information: ->year 26/03/07											4.9625
1.6 Ti	Petrol	85	08/04-03/07	ENGINE HXDA, HXDB, SIDA								
Engine: All engines	Information: 01/03/05 ->, x 1, D.I.S.									9.6381 C10		
Engine: All engines	Information: ->year 01/02/05, x 1, D.I.S.									9.6432 C10		
Engine: Eng. HXDA, SIDA	Information: 26/03/07 ->											4.7242
Engine: Eng. HXDA, SIDA	Information: ->year 26/03/07											4.9625
1.8	Petrol	88	10/03-03/07	ENGINE CSDA, CSDB								
Engine: All engines	Information: x 4, COIL ON PLUG									9.6380 C10		
1.8	Petrol	90	09/05-03/07	ENGINE QQDC								
Engine: All engines	Information: x 4, COIL ON PLUG									9.6380 C10		

A10	CONDENSER	A20	CONTACT SET	A40	DISTRIBUTOR CAP	A50	ROTOR	A70	PICK-UP
C10	COIL	C20	IGNITION MODULE	C30	ELECTRONIC IGNITION KIT	E01	IGNITION CABLE SET		

The present application list is a brief version. For the detailed information about the possibility of installation on a specific vehicle, please refer to our web-catalogue http://catalogo.facet.eu/

Vehicle	alim.	kW	Date	Engine	FUNCTIONS ON THE VEHICLE A10	A20	A40	A50	A70	C10 - C30	C20	E01
1.8	Petrol	92	04/04-03/07	Q7DA, QQDA, QQDB								

Engine	Information	A10	A20	A40	A50	A70	C10 - C30		C20	E01
All engines	x 4, COIL ON PLUG						9.6380	C10		

1.8 Flexifuel	Petrol/ Ethanol	92	01/06-03/07	Q7DA

Engine	Information	A10	A20	A40	A50	A70	C10 - C30		C20	E01
All engines	x 4, COIL ON PLUG						9.6380	C10		

2.0	Petrol	107	03/04-03/07	AODA, AODB, AODE, SYDA

Engine	Information	A10	A20	A40	A50	A70	C10 - C30		C20	E01
All engines	x 4, COIL ON PLUG						9.6380	C10		

FOCUS I

1.4	Petrol	55	04/99-03/05	FXDA, FXDB, FXDC, FXDD

Engine	Information	A10	A20	A40	A50	A70	C10 - C30		C20	E01
All engines	x 1, D.I.S.						9.6432	C10		

1.4 16V	Petrol	55	10/98-11/04	FXDA, FXDB, FXDC, FXDD

Engine	Information	A10	A20	A40	A50	A70	C10 - C30		C20	E01
All engines	x 1, D.I.S.						9.6432	C10		
Eng. FXDA							9.6432	C10		
All engines										4.9625

1.6	Petrol	74	04/99-03/05	FYDA, FYDB, FYDC, FYDD

Engine	Information	A10	A20	A40	A50	A70	C10 - C30		C20	E01
All engines	x 1, D.I.S.						9.6432	C10		

1.6 16V	Petrol	66	02/01-11/04	--

Engine	Information	A10	A20	A40	A50	A70	C10 - C30		C20	E01
All engines							9.6432	C10		4.9624

1.6 16V	Petrol	74	10/98-11/04	FYDA, FYDB, FYDC, FYDD, FYDH

Engine	Information	A10	A20	A40	A50	A70	C10 - C30		C20	E01
All engines	x 1, D.I.S.						9.6432	C10		
All engines										4.9625

1.6 16V Flexifuel	Petrol/ Ethanol	75	01/02-11/04	FYDH

Engine	Information	A10	A20	A40	A50	A70	C10 - C30		C20	E01
All engines	x 1, D.I.S.						9.6432	C10		
All engines										4.7208

1.8	Petrol	85	04/99-03/05	EYDB, EYDC, EYDD, EYDE, EYDF, EYDG

Engine	Information	A10	A20	A40	A50	A70	C10 - C30		C20	E01
All engines	x 1, D.I.S.						9.6432	C10		

1.8 16V	Petrol	85	10/98-11/04	EYDB, EYDC, EYDD, EYDE, EYDF, EYDG, EYDI, EYDJ, EYDL

Engine	Information	A10	A20	A40	A50	A70	C10 - C30		C20	E01
All engines	x 1, D.I.S.						9.6432	C10		
All engines										4.9624

1.8 16V BiFuel	Petrol/ Liquified Petroleum Gas (LPG)	85	09/02-07/04	EYDD, EYDG, EYDI

Engine	Information	A10	A20	A40	A50	A70	C10 - C30		C20	E01
All engines	x 1, D.I.S.						9.6432	C10		

A10	CONDENSER	A20	CONTACT SET	A40	DISTRIBUTOR CAP	A50	ROTOR	A70	PICK-UP
C10	COIL	C20	IGNITION MODULE	C30	ELECTRONIC IGNITION KIT	E01	IGNITION CABLE SET		

The present application list is a brief version. For the detailed information about the possibility of installation on a specific vehicle, please refer to our web-catalogue http://catalogo.facet.eu/

Vehicle	alim.	kW	Date	Engine	FUNCTIONS ON THE VEHICLE A10	A20	A40	A50	A70	C10 - C30	C20	E01
1.8 BiFuel	Petrol/ Liquified Petro-leum Gas (LPG)	82	02/03-01/05	**EYDL**								

Engine	Information	A10	A20	A40	A50	A70	C10 - C30		C20	E01
All engines	x 1, D.I.S.						9.6432	C10		
All engines										4.9624

2.0 16V	Petrol	96	10/98-11/04	**EDDB, EDDC, EDDD, EDDF**

Engine	Information	A10	A20	A40	A50	A70	C10 - C30		C20	E01
All engines	x 1, D.I.S.						9.6432	C10		
All engines										4.9624

RS	Petrol	158	10/02-11/04	**HMDA**

Engine	Information	A10	A20	A40	A50	A70	C10 - C30		C20	E01
All engines	x 1, D.I.S.						9.6432	C10		
All engines										4.9624

ST170	Petrol	127	03/02-11/04	**ALDA**

Engine	Information	A10	A20	A40	A50	A70	C10 - C30		C20	E01
All engines	x 1, D.I.S.						9.6432	C10		
All engines										4.9624

FOCUS II

1.4	Petrol	59	07/04-09/12	**ASDA, ASDB**

Engine	Information	A10	A20	A40	A50	A70	C10 - C30		C20	E01
All engines	01/03/05 ->, x 1, D.I.S., x 1, D.I.S.						9.6381	C10		
All engines	->year 01/02/05, x 1, D.I.S.						9.6432	C10		
All engines	26/03/07 ->									4.7242
All engines	->year 26/03/07									4.9625

1.6	Petrol	74	07/04-09/12	**HWDA, HWDB, SHDA, SHDB, SHDC**

Engine	Information	A10	A20	A40	A50	A70	C10 - C30		C20	E01
All engines	01/03/05 ->, 01/03/11 ->, x 1, ->year 01/02/11, D.I.S., x 1, D.I.S., x 1, D.I.S.						9.6381	C10		
All engines	->year 01/02/05, x 1, D.I.S.						9.6432	C10		
All engines	26/03/07 ->									4.7242
All engines	->year 26/03/07									4.9625

1.6 LPG	Petrol/ Liquified Petro-leum Gas (LPG)	85	10/09-09/12	**SIDA**

Engine	Information	A10	A20	A40	A50	A70	C10 - C30		C20	E01
All engines	x 1, D.I.S.						9.6381	C10		

1.6 Ti	Petrol	85	07/04-09/12	**HXDA, HXDB, SIDA**

Engine	Information	A10	A20	A40	A50	A70	C10 - C30		C20	E01
All engines	01/03/05 ->, 01/03/11 ->, ->year 01/02/11, x 1, D.I.S., x 1, D.I.S.						9.6381	C10		
All engines	->year 01/02/05, x 1, D.I.S.						9.6432	C10		
Eng. HXDA, HXDB	26/03/07 ->									4.7242
Eng. HXDA, HXDB	->year 26/03/07									4.9625

1.6 Ti-VCT	Petrol	85	09/05-07/11	**HXDA, HXDB, SIDA**

Engine	Information	A10	A20	A40	A50	A70	C10 - C30		C20	E01
All engines	x 1, D.I.S.						9.6381	C10		

1.8	Petrol	92	03/06-09/12	**Q7DA, QQDA, QQDB**

Engine	Information	A10	A20	A40	A50	A70	C10 - C30		C20	E01
All engines	x 4, COIL ON PLUG						9.6380	C10		

A10	CONDENSER	**A20**	CONTACT SET	**A40**	DISTRIBUTOR CAP	**A50**	ROTOR	**A70**	PICK-UP
C10	COIL	**C20**	IGNITION MODULE	**C30**	ELECTRONIC IGNITION KIT	**E01**	IGNITION CABLE SET		

The present application list is a brief version. For the detailed information about the possibility of installation on a specific vehicle, please refer to our web-catalogue http://catalogo.facet.eu/

Vehicle	alim.	kW	Date	Engine	FUNCTIONS ON THE VEHICLE A10	A20	A40	A50	A70	C10 - C30	C20	E01
1.8 Flexifuel	Petrol/ Ethanol	92	01/06-09/12	Q7DA, QQDA, QQDB								
Engine: All engines	Information: x 4, COIL ON PLUG									9.6380 C10		
1.8 Flexifuel	Petrol/ Ethanol	96	12/05-01/08	--, 1LQ4(364CUV8), 4LQ2(122CUL4), QQDD								
Engine: Eng. --, QQDD	Information: Qty: 4									9.6380 C10		
Engine: Eng. 1LQ4(364CUV8), 4LQ2(122CUL4)	Information: x 4, COIL ON PLUG									9.6380 C10		
1.8 Flexifuel	Petrol/ Ethanol	97	12/05-01/08	--								
Engine: All engines	Information: Qty: 4									9.6380 C10		
2.0	Petrol	104	06/05-09/08	SYDA								
Engine: All engines	Information: x 4, COIL ON PLUG									9.6380 C10		
2.0	Petrol	107	07/04-09/12	AODA, AODB, AODE, SYDA								
Engine: All engines	Information: x 4, COIL ON PLUG									9.6380 C10		
2.0 CNG	Petrol/ Compressed Natural Gas (CNG)	107	04/09-07/11	SYDA								
Engine: All engines	Information: x 4, COIL ON PLUG									9.6380 C10		
2.0 Flex	Petrol/ Ethanol	107	10/08-03/10	SYDA								
Engine: All engines	Information: x 4, COIL ON PLUG									9.6380 C10		
2.0 LPG	Petrol/ Liquified Petroleum Gas (LPG)	107	06/08-07/11	SYDA								
Engine: All engines	Information: x 4, COIL ON PLUG									9.6380 C10		
2.5 RS	Petrol	224	01/09-07/11	JZDA								
Engine: All engines	Information: x 5, COIL ON PLUG									9.6378 C10		
2.5 RS 500	Petrol	257	05/10-07/11	JZDA								
Engine: All engines	Information: x 5, COIL ON PLUG									9.6378 C10		
2.5 ST	Petrol	166	10/05-09/12	HYDA								
Engine: All engines	Information: x 5, COIL ON PLUG									9.6378 C10		
FOCUS III												
1.0 EcoBoost	Petrol	103	10/17->	M1DH								
Engine: All engines	Information: x 3, COIL ON PLUG									9.6519 C10		

A10	CONDENSER	A20	CONTACT SET	A40	DISTRIBUTOR CAP	A50	ROTOR	A70	PICK-UP
C10	COIL	C20	IGNITION MODULE	C30	ELECTRONIC IGNITION KIT	E01	IGNITION CABLE SET		

The present application list is a brief version. For the detailed information about the possibility of installation on a specific vehicle, please refer to our web-catalogue http://catalogo.facet.eu/

Vehicle	alim.	kW	Date	Engine	FUNCTIONS ON THE VEHICLE A10	A20	A40	A50	A70	C10 - C30	C20	E01
1.0 EcoBoost	Petrol	74	02/12->	ENGINE M2DA, M2DB, M2DC, SFDA, SFDB								

Engine	Information	A10	A20	A40	A50	A70	C10 - C30		C20	E01
All engines	x 3, COIL ON PLUG						9.6519	C10		

1.0 EcoBoost	Petrol	92	02/12->	ENGINE M1DA, M1DC, M1DD								

Engine	Information	A10	A20	A40	A50	A70	C10 - C30		C20	E01
All engines	x 3, COIL ON PLUG						9.6519	C10		

1.5 EcoBoost	Petrol	110	09/14->	ENGINE M8DA, M8DB, M8DD, M8DE								

Engine	Information	A10	A20	A40	A50	A70	C10 - C30		C20	E01
All engines	x 4, COIL ON PLUG						9.6523	C10		

1.5 EcoBoost	Petrol	134	09/14->	ENGINE M9DA, M9DB								

Engine	Information	A10	A20	A40	A50	A70	C10 - C30		C20	E01
All engines	x 4, COIL ON PLUG						9.6523	C10		

1.6 Flexifuel	Petrol/ Ethanol	88	07/10->	ENGINE MUDA, MUDD								

Engine	Information	A10	A20	A40	A50	A70	C10 - C30		C20	E01
All engines	x 1, D.I.S.						9.6381	C10		
Eng. MUDA										4.7242

1.6 LPG	Petrol/ Liquified Petro-leum Gas (LPG)	86	02/12->	ENGINE MUDA								

Engine	Information	A10	A20	A40	A50	A70	C10 - C30		C20	E01
All engines	x 1, D.I.S.						9.6381	C10		
All engines										4.7242

1.6 LPG	Petrol/ Liquified Petro-leum Gas (LPG)	88	02/12->	ENGINE MUDA, MUDD								

Engine	Information	A10	A20	A40	A50	A70	C10 - C30		C20	E01
All engines	x 1, D.I.S.						9.6381	C10		
Eng. MUDA										4.7242

1.6 Ti	Petrol	63	08/11->	ENGINE XTDA, XTDB								

Engine	Information	A10	A20	A40	A50	A70	C10 - C30		C20	E01
All engines	x 1, D.I.S.						9.6381	C10		
Eng. XTDA										4.7242

1.6 Ti	Petrol	77	07/10->	ENGINE IQDA, IQDB, IQDC								

Engine	Information	A10	A20	A40	A50	A70	C10 - C30		C20	E01
All engines	x 1, D.I.S., x 1, D.I.S.						9.6381	C10		
Eng. IQDB										4.7242

1.6 Ti	Petrol	88	02/12->	ENGINE MUDA, MUDD								

Engine	Information	A10	A20	A40	A50	A70	C10 - C30		C20	E01
All engines	x 1, D.I.S.						9.6381	C10		
Eng. MUDA										4.7242

1.6 Ti	Petrol	92	07/10->	ENGINE PNDA, PNDD								

Engine	Information	A10	A20	A40	A50	A70	C10 - C30		C20	E01
All engines	x 1, D.I.S.						9.6381	C10		
Eng. PNDA										4.7242

A10	CONDENSER	A20	CONTACT SET	A40	DISTRIBUTOR CAP	A50	ROTOR	A70	PICK-UP
C10	COIL	C20	IGNITION MODULE	C30	ELECTRONIC IGNITION KIT	E01	IGNITION CABLE SET		

The present application list is a brief version. For the detailed information about the possibility of installation on a specific vehicle, please refer to our web-catalogue http://catalogo.facet.eu/

Vehicle	alim.	kW	Date	Engine	FUNCTIONS ON THE VEHICLE: A10	A20	A40	A50	A70	C10 - C30	C20	E01
1.6 Ti-VCT	Petrol	90	07/10->	--								

Engine	Information	A10	A20	A40	A50	A70	C10 - C30		C20	E01
All engines							9.6381	C10		4.7242

FUSION

1.25	Petrol	51	10/02->	--

Engine	Information	A10	A20	A40	A50	A70	C10 - C30		C20	E01
All engines	21/02/05 ->						9.6381	C10		
All engines	->year 21/02/05						9.6432	C10		
All engines	01/02/07 ->									4.7242
All engines	->year 01/02/07									4.9625

1.25	Petrol	55	08/04-12/12	FUJA, FUJB

Engine	Information	A10	A20	A40	A50	A70	C10 - C30		C20	E01
All engines	01/03/05 ->, x 1, D.I.S.						9.6381	C10		
All engines	->year 01/02/05, x 1, D.I.S.						9.6432	C10		
All engines	01/02/07 ->									4.7242
All engines	->year 01/02/07									4.9625

1.3	Petrol	44	11/02->	BAJA

Engine	Information	A10	A20	A40	A50	A70	C10 - C30		C20	E01
All engines	01/03/05 ->, x 1, D.I.S.						9.6381	C10		
All engines	23/08/07 ->						9.6381	C10		
All engines	->year 01/02/05, x 1, D.I.S.						9.6432	C10		
All engines	->year 23/08/07						9.6432	C10		
All engines										4.7208

1.4	Petrol	55	08/02->	--

Engine	Information	A10	A20	A40	A50	A70	C10 - C30		C20	E01
All engines	21/02/05 ->						9.6381	C10		
All engines	->year 21/02/05						9.6432	C10		
All engines	01/02/07 ->									4.7242
All engines	->year 01/02/07									4.9625

1.4	Petrol	59	08/02-12/12	FXJA, FXJB, FXJC

Engine	Information	A10	A20	A40	A50	A70	C10 - C30		C20	E01
All engines	01/03/05 ->, 01/03/11 ->, ->year 01/02/11, x 1, D.I.S., x 1, D.I.S.						9.6381	C10		
All engines	->year 01/02/05, x 1, D.I.S.						9.6432	C10		
All engines	01/02/07 ->									4.7242
All engines	->year 01/02/07									4.9625

1.4 LPG	Petrol/ Liquified Petro-leum Gas (LPG)	59	01/10-12/12	UTJA

Engine	Information	A10	A20	A40	A50	A70	C10 - C30		C20	E01
All engines	x 1, D.I.S.						9.6381	C10		
All engines										4.7242

1.6	Petrol	74	08/02-11/09	FYJA, FYJB, FYJC

Engine	Information	A10	A20	A40	A50	A70	C10 - C30		C20	E01
All engines	01/03/11 ->, x 1, D.I.S.						9.6381	C10		
All engines	->year 01/02/05, x 1, D.I.S.						9.6432	C10		
All engines	01/02/07 ->									4.7242
All engines	->year 01/02/07									4.9625

GALAXY I

2.0	Petrol	85	03/96-03/06	ZVSA

Engine	Information	A10	A20	A40	A50	A70	C10 - C30		C20	E01
All engines	x 1, D.I.S.						9.6432	C10		

A10	CONDENSER	A20	CONTACT SET	A40	DISTRIBUTOR CAP	A50	ROTOR	A70	PICK-UP
C10	COIL	C20	IGNITION MODULE	C30	ELECTRONIC IGNITION KIT	E01	IGNITION CABLE SET		

The present application list is a brief version. For the detailed information about the possibility of installation on a specific vehicle, please refer to our web-catalogue http://catalogo.facet.eu/

Vehicle	alim.	kW	Date	Engine	FUNCTIONS ON THE VEHICLE: A10	A20	A40	A50	A70	C10 - C30	C20	E01
2.0 i	Petrol	85	11/95-05/06	NSE, ZVSA								
All engines	x 1, D.I.S. --- x 1, D.I.S.									9.6432 C10		
2.3	Petrol	103	11/02-03/06	E5SB								
All engines	x 1, D.I.S.									9.6432 C10		
2.3	Petrol	107	05/00-10/02	E5SA								
All engines	x 1, D.I.S.									9.6432 C10		
2.3 16V	Petrol	103	09/01-05/06	E5SB								
All engines	x 1, D.I.S.									9.6432 C10		
All engines												4.9976
2.3 16V	Petrol	107	01/97-05/06	E5SA, Y5B								
All engines	01/04/00 ->, x 1, D.I.S. --- 01/04/00 ->, ->year 01/12/00, x 1, D.I.S. --- 01/01/01 ->, x 1, D.I.S.									9.6432 C10		
Eng. Y5B												4.9145
Eng. E5SA												4.9976
2.8	Petrol	128	11/95-07/00	AAA								
All engines	01/04/00 ->, x 6, COIL ON PLUG									9.6335 C10		
2.8	Petrol	150	05/00-03/06	AYL								
All engines	x 6, COIL ON PLUG									9.6335 C10		
2.8 i V6	Petrol	128	11/95-04/00	AAA, AMY								
All engines	01/04/00 ->, x 6, COIL ON PLUG									9.6335 C10		
2.8 V6	Petrol	150	04/00-05/06	AYL								
All engines	x 6, COIL ON PLUG									9.6335 C10		
GALAXY II												
2.0	Petrol	107	05/06-06/15	AOWA, AOWB, TBWA, TBWB								
All engines	x 4, COIL ON PLUG									9.6380 C10		
2.0 Flexifuel	Petrol/ Ethanol	107	05/06-06/15	TBWA, TBWB								
All engines	x 4, COIL ON PLUG									9.6380 C10		
2.5 ST	Petrol	162	05/06->	HUWA								
All engines	Qty: 5									9.6378 C10		
GALAXY III												
1.5 EcoBoost	Petrol	118	01/15-06/18	UNCJ, UNCK								
All engines	x 4, COIL ON PLUG									9.6523 C10		

A10	CONDENSER	**A20**	CONTACT SET	**A40**	DISTRIBUTOR CAP	**A50**	ROTOR	**A70**	PICK-UP
C10	COIL	**C20**	IGNITION MODULE	**C30**	ELECTRONIC IGNITION KIT	**E01**	IGNITION CABLE SET		

The present application list is a brief version. For the detailed information about the possibility of installation on a specific vehicle, please refer to our web-catalogue http://catalogo.facet.eu/

Vehicle	alim.	kW	Date	Engine	FUNCTIONS ON THE VEHICLE							
					A10	A20	A40	A50	A70	C10 - C30	C20	E01
1.5 EcoBoost	Petrol	121	07/18->	C15HDTX						9.6523 C10		
Engine: All engines — Information: x 4, COIL ON PLUG												
GRANADA												
1.7	Petrol	51	08/77-05/82	TV 17 LC								
Engine: All engines — Information: version Bosch							2.7479PHT	3.7573/21RS				
Engine: All engines — Information:										9.6069 C10		4.9078
2.0	Petrol	74	08/79-08/85	NEP								
Engine: All engines — Information: version Bosch							2.7479PHT	3.7573/21RS				
Engine: All engines — Information:										9.6069 C10		4.9078
GRAND C-MAX												
1.0 EcoBoost	Petrol	74	10/12-06/19	M2DA, M2DC, SFDA								
Engine: Eng. M2DA, M2DC — Information: x 3, COIL ON PLUG										9.6519 C10		
Engine: Eng. SFDA — Information: Qty: 3										9.6519 C10		
1.0 EcoBoost	Petrol	92	10/12-06/19	M1DA, M1DD								
Engine: All engines — Information: x 3, COIL ON PLUG										9.6519 C10		
1.5 EcoBoost	Petrol	110	03/15-06/19	M8DB, M8DF								
Engine: All engines — Information: x 4, COIL ON PLUG										9.6523 C10		
1.5 EcoBoost	Petrol	134	03/15-06/19	M9DB								
Engine: All engines — Information: x 4, COIL ON PLUG										9.6523 C10		
1.6 Ti	Petrol	63	12/10-06/19	XTDA								
Engine: All engines — Information: x 1, D.I.S.										9.6381 C10		
1.6 Ti	Petrol	77	12/10-06/19	IQDA, IQDB								
Engine: All engines — Information: x 1, D.I.S.										9.6381 C10		
Engine: All engines — Information:												4.7242
1.6 Ti	Petrol	92	12/10-06/19	PNDA, PNDD								
Engine: All engines — Information: x 1, D.I.S.										9.6381 C10		
Engine: Eng. PNDA — Information:												4.7242
KA I												
1.3	Petrol	51	09/02-03/04	A9A, A9B								
Engine: All engines — Information: x 1, D.I.S.										9.6432 C10		
1.3 i	Petrol	36	06/98-11/08	JJD, JJF, JJG, JJH, JJL								
Engine: All engines — Information: x 1, D.I.S.										9.6432 C10		
Engine: All engines — Information: 15/09/98 ->												4.9568
Engine: All engines — Information: ->year 15/09/98												4.9639

A10	CONDENSER	A20	CONTACT SET	A40	DISTRIBUTOR CAP	A50	ROTOR	A70	PICK-UP
C10	COIL	C20	IGNITION MODULE	C30	ELECTRONIC IGNITION KIT	E01	IGNITION CABLE SET		

The present application list is a brief version. For the detailed information about the possibility of installation on a specific vehicle, please refer to our web-catalogue http://catalogo.facet.eu/

Vehicle	alim.	kW	Date	Engine	FUNCTIONS ON THE VEHICLE							
					A10	A20	A40	A50	A70	C10 - C30	C20	E01
1.3 i	Petrol	37	09/96-10/02	ENGINE: JJB								
Engine: All engines	Information: x 1, D.I.S.									9.6432 C10		
Engine: All engines	Information: 15/09/98 ->											4.9568
Engine: All engines	Information: ->year 15/09/98											4.9639
1.3 i	Petrol	44	09/96-11/08	ENGINE: BAA, J4D, J4K, J4M, J4N, J4P, J4S								
Engine: All engines	Information: 01/08/07 ->, x 1, D.I.S.									9.6381 C10		
Engine: All engines	Information: ->year 01/07/07, x 1, D.I.S., x 1, D.I.S.									9.6432 C10		
Engine: Eng. BAA	Information:											4.7208
Engine: Eng. J4D, J4K, J4M, J4N, J4P, J4S	Information: 15/09/98 ->											4.9568
Engine: Eng. J4D, J4K, J4M, J4N, J4P, J4S	Information: ->year 15/09/98											4.9639
1.3 i ROCAM	Petrol	51	08/02-11/08	ENGINE: A9A, A9B								
Engine: All engines	Information: 01/07/07 ->, x 1, D.I.S.									9.6381 C10		
Engine: All engines	Information: ->year 01/06/07, x 1, D.I.S.									9.6432 C10		
Engine: All engines	Information:											4.7208
1.6	Petrol	70	09/00-11/08	ENGINE: CDB, CDC								
Engine: All engines	Information:											4.7208
1.6 i	Petrol	70	02/01-11/08	ENGINE: CCA, CDB, CDC								
Engine: Eng. CDB, CDC	Information: 01/08/07 ->, x 1, D.I.S.									9.6381 C10		
Engine: Eng. CCA	Information:									9.6432 C10		
Engine: Eng. CDB, CDC	Information: ->year 01/07/07, x 1, D.I.S.									9.6432 C10		
Engine: All engines	Information:											4.7208
1.6 i	Petrol	71	11/05-09/08	ENGINE: HL16SL9B								
Engine: All engines	Information: 01/07/07 ->, x 1, D.I.S.									9.6381 C10		
Engine: All engines	Information: ->year 01/06/07, x 1, D.I.S.									9.6432 C10		
KA II												
1.2	Petrol	51	10/08-05/16	ENGINE: 169A4000, FP4								
Engine: All engines	Information: x 1, D.I.S.									9.6323 C10		
Engine: Eng. FP4	Information:											4.7170
KA+												
1.2	Petrol	51	06/16->	ENGINE: B2KA								
Engine: All engines	Information: x 1, D.I.S.									9.6381 C10		
Engine: All engines	Information:											4.7242
1.2	Petrol	63	06/16->	ENGINE: YSKD, YSKE								
Engine: All engines	Information: x 1, D.I.S.									9.6381 C10		
1.2 Ti-VCT	Petrol	63	06/16->	ENGINE: YSKD, YSKE								
Engine: All engines	Information: x 1, D.I.S.									9.6381 C10		
Engine: All engines	Information:											4.7242

A10	CONDENSER	A20	CONTACT SET	A40	DISTRIBUTOR CAP	A50	ROTOR	A70	PICK-UP
C10	COIL	C20	IGNITION MODULE	C30	ELECTRONIC IGNITION KIT	E01	IGNITION CABLE SET		

The present application list is a brief version. For the detailed information about the possibility of installation on a specific vehicle, please refer to our web-catalogue http://catalogo.facet.eu/

Vehicle	alim.	kW	Date	Engine	FUNCTIONS ON THE VEHICLE A10	A20	A40	A50	A70	C10 - C30	C20	E01

KUGA I

				ENGINE
2.5	Petrol	147	02/08-11/12	HYDB, HYDC

Engine	Information	A10	A20	A40	A50	A70	C10 - C30		C20	E01
All engines	x 5, COIL ON PLUG						9.6378	C10		

				ENGINE
2.5 4x4	Petrol	147	02/08-11/12	HYDB

Engine	Information	A10	A20	A40	A50	A70	C10 - C30		C20	E01
All engines	x 5, COIL ON PLUG						9.6378	C10		

KUGA II

				ENGINE
1.5 16V	Petrol	0	03/13->	--

Engine	Information	A10	A20	A40	A50	A70	C10 - C30		C20	E01
All engines	Qty: 4						9.6523	C10		

				ENGINE
1.5 EcoBoost	Petrol	110	09/14->	M8MA, M8MB, M8MC, M8MD, M8ME

Engine	Information	A10	A20	A40	A50	A70	C10 - C30		C20	E01
All engines	x 4, COIL ON PLUG						9.6523	C10		

				ENGINE
1.5 EcoBoost	Petrol	88	01/16->	BNMA

Engine	Information	A10	A20	A40	A50	A70	C10 - C30		C20	E01
All engines	x 4, COIL ON PLUG						9.6523	C10		

				ENGINE
1.5 EcoBoost 4x4	Petrol	110	07/16->	0CEAA, M8MA, M8MB, M8MD

Engine	Information	A10	A20	A40	A50	A70	C10 - C30		C20	E01
All engines	x 4, COIL ON PLUG						9.6523	C10		

				ENGINE
1.5 EcoBoost 4x4	Petrol	129	08/18->	37F3P674K, M9ME

Engine	Information	A10	A20	A40	A50	A70	C10 - C30		C20	E01
All engines	x 4, COIL ON PLUG						9.6523	C10		

				ENGINE
1.5 EcoBoost 4x4	Petrol	134	09/14->	285ZV604, 65M4R730, M9MA, M9MC

Engine	Information	A10	A20	A40	A50	A70	C10 - C30		C20	E01
All engines	x 4, COIL ON PLUG						9.6523	C10		

MAVERICK

				ENGINE
2.0 16V	Petrol	91	02/01->	YF

Engine	Information	A10	A20	A40	A50	A70	C10 - C30		C20	E01
All engines	x 1, D.I.S.						9.6432	C10		
All engines										4.9624

				ENGINE
2.0 16V FWD	Petrol	91	02/01->	YF

Engine	Information	A10	A20	A40	A50	A70	C10 - C30		C20	E01
All engines	x 1, D.I.S.						9.6432	C10		

				ENGINE
2.3 16V	Petrol	110	03/04->	GZ, ZH23HYU

Engine	Information	A10	A20	A40	A50	A70	C10 - C30		C20	E01
Eng. GZ	Qty: 4						9.6380	C10		
Eng. ZH23HYU	x 4, COIL ON PLUG						9.6380	C10		

				ENGINE
2.4 i	Petrol	85	09/96-04/98	KA24

Engine	Information	A10	A20	A40	A50	A70	C10 - C30		C20	E01
All engines	version Hitachi			2.7989	3.8002					
All engines										4.9789

				ENGINE
2.4 i	Petrol	87	09/96-04/98	KA24

Engine	Information	A10	A20	A40	A50	A70	C10 - C30		C20	E01
All engines	version Hitachi			2.7989	3.8002					
All engines										4.9789

A10	CONDENSER	A20	CONTACT SET	A40	DISTRIBUTOR CAP	A50	ROTOR	A70	PICK-UP
C10	COIL	C20	IGNITION MODULE	C30	ELECTRONIC IGNITION KIT	E01	IGNITION CABLE SET		

The present application list is a brief version. For the detailed information about the possibility of installation on a specific vehicle, please refer to our web-catalogue http://catalogo.facet.eu/

Vehicle	alim.	kW	Date	Engine	FUNCTIONS ON THE VEHICLE: A10	A20	A40	A50	A70	C10 - C30	C20	E01
2.4 i	Petrol	91	02/93-08/96	KA24E								
Engine: All engines — Information: version Hitachi							2.7946	3.7970				
MONDEO I												
1.6 i	Petrol	66	08/96-09/00	L1J								
Engine: All engines — Information: x 1, D.I.S.										9.6432 C10		
Engine: All engines — Information: 01/05/98 ->												4.9624
Engine: All engines — Information: ->year 01/05/98												4.9630
1.6 i 16V	Petrol	65	07/94-08/96	L1J								
Engine: All engines — Information:										9.6199, 9.6212 C10		4.9630
1.6 i 16V	Petrol	66	02/93-08/96	L1F								
Engine: All engines — Information:										9.6199, 9.6212 C10		4.9630
1.6 i 16V	Petrol	70	05/98-09/00	L1L, L1N, L1Q								
Engine: All engines — Information: x 1, D.I.S.										9.6432 C10		
Engine: All engines — Information: 01/05/98 ->												4.9624
Engine: All engines — Information: ->year 01/05/98												4.9630
1.8 4x4	Petrol	85	02/93-08/96	RKA								
Engine: All engines — Information:										9.6199 C10		4.9630
1.8 i	Petrol	85	08/96-09/00	RKA, RKB, RKF, RKH, RKJ, RKK								
Engine: All engines — Information: x 1, D.I.S.										9.6432 C10		
Engine: Eng. RKB, RKF, RKH, RKJ, RKK — Information: 01/05/98 ->												4.9624
Engine: Eng. RKB, RKF, RKH, RKJ, RKK — Information: ->year 01/05/98												4.9630
1.8 i 16V	Petrol	82	01/94-08/96	RKB								
Engine: All engines — Information:										9.6199, 9.6212 C10		4.9630
1.8 i 16V	Petrol	85	02/93-08/96	RKA								
Engine: All engines — Information:										9.6199, 9.6212 C10		4.9630
1.8 i 16V 4x4	Petrol	85	02/93-08/96	RKA								
Engine: All engines — Information:										9.6199, 9.6212 C10		4.9630
2.0 i	Petrol	96	08/96-09/00	NGA, NGB, NGC, NGD								
Engine: All engines — Information: x 1, D.I.S.										9.6432 C10		
Engine: All engines — Information: 01/05/98 ->												4.9624
Engine: All engines — Information: ->year 01/05/98												4.9630
2.0 i 16V	Petrol	100	02/93-08/96	NGA								
Engine: All engines — Information:										9.6199, 9.6212 C10		4.9630
2.0 i 16V	Petrol	97	01/93-08/96	NGA								
Engine: All engines — Information:										9.6199 C10		4.9630

A10	CONDENSER	A20	CONTACT SET	A40	DISTRIBUTOR CAP	A50	ROTOR	A70	PICK-UP
C10	COIL	C20	IGNITION MODULE	C30	ELECTRONIC IGNITION KIT	E01	IGNITION CABLE SET		

The present application list is a brief version. For the detailed information about the possibility of installation on a specific vehicle, please refer to our web-catalogue http://catalogo.facet.eu/

Vehicle	alim.	kW	Date	Engine	FUNCTIONS ON THE VEHICLE A10	A20	A40	A50	A70	C10 - C30	C20	E01
2.0 i 16V 4x4	Petrol	100	02/93-08/96	**NGA**						9.6199, 9.6212 C10		4.9630
2.0 i 16V 4x4	Petrol	97	12/94-08/96	**NGA**						9.6199, 9.6212 C10		4.9630
2.5 24V	Petrol	125	08/96-09/00	**SEA, SEB, SEC**						9.6070 C10		
2.5 i 24V	Petrol	125	07/94-08/96	**SEA**						9.6070 C10		
2.5 ST 200	Petrol	151	05/99-09/00	**SGA**						9.6070 C10		

MONDEO II

Vehicle	alim.	kW	Date	Engine	A10	A20	A40	A50	A70	C10 - C30	C20	E01
1.8 16V	Petrol	81	10/00-03/07	**CGBA, CGBB**								
All engines	01/03/05 ->, x 1, D.I.S.									9.6381 C10		
All engines	->year 01/02/05, x 1, D.I.S.									9.6432 C10		
1.8 16V	Petrol	92	10/00-03/07	**CHBA, CHBB**								
All engines	01/03/05 ->, x 1, D.I.S.									9.6381 C10		
All engines	->year 01/02/05, x 1, D.I.S.									9.6432 C10		
2.0 16V	Petrol	107	10/00-03/07	**CJBA, CJBB**								
All engines	01/03/05 ->, x 1, D.I.S.									9.6381 C10		
All engines	->year 01/02/05, x 1, D.I.S.									9.6432 C10		
3.0 V6 24V	Petrol	150	09/04-03/07	**REBA**								4.7214
ST220	Petrol	166	04/02-03/07	**MEBA**								4.7214

MONDEO III

Vehicle	alim.	kW	Date	Engine	A10	A20	A40	A50	A70	C10 - C30	C20	E01
1.6 Ti	Petrol	81	03/07-01/15	**RHBA**								
All engines	x 1, D.I.S.									9.6381 C10		
All engines	19/03/07 ->											4.7242
All engines	->year 19/03/07											4.9625
1.6 Ti	Petrol	88	03/10-01/15	**KGBA**								
All engines	x 1, D.I.S.									9.6381 C10		
All engines	19/03/07 ->											4.7242
All engines	->year 19/03/07											4.9625
1.6 Ti	Petrol	92	03/07-01/15	**PNBA**								
All engines	x 1, D.I.S.									9.6381 C10		

A10	CONDENSER	**A20**	CONTACT SET	**A40**	DISTRIBUTOR CAP	**A50**	ROTOR	**A70**	PICK-UP
C10	COIL	**C20**	IGNITION MODULE	**C30**	ELECTRONIC IGNITION KIT	**E01**	IGNITION CABLE SET		

The present application list is a brief version. For the detailed information about the possibility of installation on a specific vehicle, please refer to our web-catalogue http://catalogo.facet.eu/

Vehicle	alim.	kW	Date	Engine	FUNCTIONS ON THE VEHICLE A10	A20	A40	A50	A70	C10 - C30	C20	E01
1.6 Ti	Petrol	92	03/07-01/15	**PNBA**								
Engine: All engines	Information: 19/03/07 ->											4.7242
Engine: All engines	Information: ->year 19/03/07											4.9625
2.0	Petrol	107	03/07-01/15	**AOBA, AOBC, TBBA, TBBB**								
Engine: All engines	Information: x 4, COIL ON PLUG									9.6380 C10		
2.0 Flexifuel	Petrol/ Ethanol	107	03/09-01/15	**TBBA, TBBB**								
Engine: All engines	Information: x 4, COIL ON PLUG									9.6380 C10		
2.0 LPG	Petrol/ Liquified Petro-leum Gas (LPG)	107	07/09-01/15	**TBBA, TBBB**								
Engine: All engines	Information: x 4, COIL ON PLUG									9.6380 C10		
2.5	Petrol	162	03/07-01/15	**HUBA**								
Engine: All engines	Information: x 5, COIL ON PLUG									9.6378 C10		
MONDEO IV												
1.0 EcoBoost	Petrol	92	02/15->	**M1CA, M1CB**								
Engine: All engines	Information: x 3, COIL ON PLUG									9.6519 C10		
1.5 EcoBoost	Petrol	118	09/14->	**UNCA, UNCB, UNCE, UNCF**								
Engine: All engines	Information: x 4, COIL ON PLUG									9.6523 C10		
1.5 EcoBoost	Petrol	121	05/18->	**UNCN**								
Engine: All engines	Information: x 4, COIL ON PLUG									9.6523 C10		
1.5 GTDI	Petrol	0	09/14->	--								
Engine: All engines	Information: Qty: 4									9.6523 C10		
2.0	Petrol	107	03/07-09/14	**AOBC**								
Engine: All engines	Information: x 4, COIL ON PLUG									9.6380 C10		
ORION I												
1.3	Petrol	51	07/83-07/88	**JPA**								
Engine: All engines	Information: version Bosch						2.7479PHT	3.7560RS, 3.7561RS				
Engine: All engines	Information: version Lucas						2.8083PHT					
Engine: All engines	Information:									9.6069 C10		
1.4	Petrol	54	01/86-07/90	**FUC**								
Engine: All engines	Information: version Bosch						2.7479PHT	3.7561RS				
Engine: All engines	Information: version Lucas						2.8096PHT	3.8126RS				
Engine: All engines	Information:									9.6069 C10		

A10	CONDENSER	A20	CONTACT SET	A40	DISTRIBUTOR CAP	A50	ROTOR	A70	PICK-UP
C10	COIL	C20	IGNITION MODULE	C30	ELECTRONIC IGNITION KIT	E01	IGNITION CABLE SET		

The present application list is a brief version. For the detailed information about the possibility of installation on a specific vehicle, please refer to our web-catalogue http://catalogo.facet.eu/

Vehicle	alim.	kW	Date	Engine	FUNCTIONS ON THE VEHICLE A10	A20	A40	A50	A70	C10 - C30	C20	E01
1.4	Petrol	55	12/85-07/90	ENGINE FUA								
Engine	Information											
All engines	version Bosch						2.7479PHT	3.7561RS				
All engines	version Lucas						2.8096PHT	3.8126RS				
All engines										9.6069, 9.6212 C10		
1.4 Cat	Petrol	54	02/87-07/90	ENGINE F6B, F6D								
Engine	Information											
All engines	version Bosch						2.7479PHT					
Eng. F6D	version Lucas						2.8096PHT	3.8126RS				
Eng. F6D	version Bosch							3.7561RS				
Eng. F6B	version Bosch							3.7573/21RS				
All engines										9.6069 C10		
Eng. F6D												4.9281
1.6	Petrol	58	07/83-03/86	ENGINE LP1, LPA								
Engine	Information											
All engines	version Lucas						2.8083PHT					
All engines	version Bosch							3.7560RS				
All engines										9.6069 C10		
1.6 i	Petrol	77	07/83-07/90	ENGINE LR1, LRA, LRB								
Engine	Information											
Eng. LRB	version Bosch						2.7479PHT					
Eng. LR1, LRA	version Bosch							3.7573/12RS				
Eng. LRB	+catalytic converter, version Bosch							3.7573/21RS				
All engines										9.6069 C10		
Eng. LRB												4.9281
ORION II												
1.3	Petrol	44	07/90-12/93	ENGINE J4B, J6A								
Engine	Information											
All engines										9.6212, 9.6264 C10		4.9007
1.4	Petrol	52	07/90-12/93	ENGINE F6F, F6G								
Engine	Information											
All engines										9.6035, 9.6212 C10		4.8864
1.4	Petrol	54	07/90-12/93	ENGINE FUH								
Engine	Information											
All engines										9.6212 C10		
1.6	Petrol	66	07/90-12/92	ENGINE LUJ, LUK								
Engine	Information											
All engines										9.6035, 9.6212 C10		4.8864
1.6 i	Petrol	77	07/90-09/92	ENGINE HL16EFI-LJE, LJF								
Engine	Information											
All engines										9.6035 C10		4.8864
Eng. LJF										9.6212 C10		
1.6 i 16V	Petrol	66	07/92-12/93	ENGINE L1E, L1K								
Engine	Information											
All engines										9.6199, 9.6212 C10		4.9630
1.8 i 16V	Petrol	77	02/92-12/93	ENGINE RDA								
Engine	Information											
All engines										9.6199, 9.6212 C10		4.9630

A10	CONDENSER	A20	CONTACT SET	A40	DISTRIBUTOR CAP	A50	ROTOR	A70	PICK-UP
C10	COIL	C20	IGNITION MODULE	C30	ELECTRONIC IGNITION KIT	E01	IGNITION CABLE SET		

The present application list is a brief version. For the detailed information about the possibility of installation on a specific vehicle, please refer to our web-catalogue http://catalogo.facet.eu/

Vehicle	alim.	kW	Date	Engine	FUNCTIONS ON THE VEHICLE A10	A20	A40	A50	A70	C10 - C30	C20	E01
1.8 i 16V	Petrol	96	01/92-12/93	99BFR1740								
Engine: All engines — Information:												4.9630
P 100												
1.6	Petrol	54	04/82-09/87	LCR								
Engine: All engines — Information:												4.9078
2.0	Petrol	57	10/87-12/92	NAE								
Engine: All engines — Information: version Bosch							2.7509PHT	3.7525RS				
Engine: All engines — Information:												4.9078
PROBE												
2.0 16V	Petrol	85	01/93-09/97	A20LE-FS								
Engine: All engines — Information: 01/12/94 ->, version Mitsubishi								3.8331/32				
Engine: All engines — Information: ->year 30/11/94, version Mitsubishi								3.8331/37				
PUMA												
1.4 16V	Petrol	66	11/97-10/00	FHD, FHF								
Engine: All engines — Information: ->year 01/05/98, x 1, D.I.S.										9.6199S C10		
Engine: All engines — Information: 01/06/98 ->, x 1, D.I.S.										9.6432 C10		
Engine: All engines — Information: ->year 15/05/98												4.9619
Engine: All engines — Information: 15/05/98 ->												4.9625
1.6 16V	Petrol	76	08/00-06/02	L1W								
Engine: All engines — Information: x 1, D.I.S.										9.6432 C10		
Engine: All engines — Information:												4.9625
1.7 16V	Petrol	92	03/97-06/02	MHA, MHB								
Engine: All engines — Information: ->year 01/04/00, x 1, D.I.S.										9.6199S C10		
Engine: All engines — Information: 01/05/00 ->, x 1, D.I.S.										9.6432 C10		
Engine: All engines — Information: ->year 15/05/98												4.9619
Engine: All engines — Information: 15/05/98 ->												4.9625
Racing ST 160	Petrol	114	06/99-06/02	MHA								
Engine: All engines — Information: ->year 01/04/00, x 1, D.I.S.										9.6199S C10		
Engine: All engines — Information: 01/05/00 ->, x 1, D.I.S.										9.6432 C10		
RANGER IV												
2.2	Petrol	78	03/02-09/05	--, F2D6								
Engine: Eng. -- — Information: version Mitsubishi							2.8322/21					
Engine: Eng. F2D6 — Information: x 1, DISTRIBUTOR										9.6266S C10		
2.2 EFI	Petrol	0	03/99->	--								
Engine: All engines — Information: version Mitsubishi							2.8322/21					
2.6	Petrol	80	10/02-09/04	--								
Engine: All engines — Information: version Mitsubishi							2.8322/21					
Engine: All engines — Information: without fastening clamp										9.6266S C10		

A10	CONDENSER	A20	CONTACT SET	A40	DISTRIBUTOR CAP	A50	ROTOR	A70	PICK-UP
C10	COIL	C20	IGNITION MODULE	C30	ELECTRONIC IGNITION KIT	E01	IGNITION CABLE SET		

The present application list is a brief version. For the detailed information about the possibility of installation on a specific vehicle, please refer to our web-catalogue http://catalogo.facet.eu/

Vehicle	alim.	kW	Date	Engine	FUNCTIONS ON THE VEHICLE A10	A20	A40	A50	A70	C10 - C30	C20	E01
4.0	Petrol	152	10/05-06/06	ENGINE --								
Engine	Information											
All engines										9.6189 C10		
4.0 4x4	Petrol	152	10/05-06/06	ENGINE --								
Engine	Information											
All engines										9.6189 C10		
SCORPIO I												
1.8	Petrol	66	04/85-02/92	ENGINE REC								
Engine	Information											
All engines	version Bosch						2.7479PHT	3.7573/21RS				
All engines										9.6069 C10		4.9078
2.0 i	Petrol	85	04/85-09/94	ENGINE N9F, NRA, NRI								
Engine	Information											
Eng. NRA, NRI	no specific info conc. application available, version Bosch						2.7479PHT	3.7573/21RS				
All engines	no specific info conc. application available, version Bosch						2.7530/23PHT	3.7573/40RS				
Eng. NRA, NRI	version Ford						2.7792PHT					
All engines										9.6069 C10		
Eng. NRA, NRI	no specific info conc. application available											4.9078
2.0 i	Petrol	88	05/89-09/94	ENGINE N9D								
Engine	Information											
All engines	no specific info conc. application available, version Bosch						2.7530/23PHT	3.7573/40RS				
All engines										9.6069 C10		
2.0 i	Petrol	90	11/92-09/94	ENGINE N9B								
Engine	Information											
All engines	no specific info conc. application available, version Bosch						2.7530/23PHT	3.7573/40RS				
All engines										9.6069 C10		
2.4 i	Petrol	96	09/86-09/88	ENGINE ARC								
Engine	Information											
All engines	version Ford							3.7892				
All engines										9.6069 C10		
2.9 24V	Petrol	143	08/93-09/94	ENGINE BOA								
Engine	Information											
All engines										9.6070 C10		
2.9 i	Petrol	107	09/86-12/94	ENGINE BRD, BRE, BRF								
Engine	Information											
All engines	version Ford							3.7892				
All engines										9.6069 C10		
2.9 i	Petrol	110	09/86-09/94	ENGINE BRC								
Engine	Information											
All engines	version Ford							3.7892				
All engines										9.6069 C10		
2.9 i 24V	Petrol	143	04/91-09/94	ENGINE BOA								
Engine	Information											
All engines										9.6070 C10		
2.9 i 4x4	Petrol	107	05/88-10/94	ENGINE BRD, BRE, BRF								
Engine	Information											
All engines	version Ford							3.7892				
All engines										9.6069 C10		

A10	CONDENSER	A20	CONTACT SET	A40	DISTRIBUTOR CAP	A50	ROTOR	A70	PICK-UP
C10	COIL	C20	IGNITION MODULE	C30	ELECTRONIC IGNITION KIT	E01	IGNITION CABLE SET		

The present application list is a brief version. For the detailed information about the possibility of installation on a specific vehicle, please refer to our web-catalogue http://catalogo.facet.eu/

Vehicle	alim.	kW	Date	Engine	FUNCTIONS ON THE VEHICLE A10	A20	A40	A50	A70	C10 - C30	C20	E01
2.9 i 4x4	Petrol	110	09/86-09/94	BRC								

Engine	Information	A10	A20	A40	A50	A70	C10 - C30		C20	E01
All engines	version Ford				3.7892					
All engines							9.6069	C10		

2.9 i Cat	Petrol	107	10/87-09/94	BRE

Engine	Information	A10	A20	A40	A50	A70	C10 - C30		C20	E01
All engines	version Ford				3.7892					
All engines							9.6069	C10		

SCORPIO II

2.0 i 16V	Petrol	100	10/94-08/98	N3A

Engine	Information	A10	A20	A40	A50	A70	C10 - C30		C20	E01
All engines										4.9145

2.3 i 16V	Petrol	108	06/96-08/98	Y5A

Engine	Information	A10	A20	A40	A50	A70	C10 - C30		C20	E01
All engines										4.9145

2.9 i	Petrol	110	02/95-08/98	BRG

Engine	Information	A10	A20	A40	A50	A70	C10 - C30		C20	E01
All engines	version Ford				3.7892					
All engines	x 1, Colour:Red, DISTRIBUTOR, 12 Volt, Dia: 55 mm, connector type DIN						9.6069	C10		

2.9 i 24V	Petrol	152	10/94-08/98	BOB

Engine	Information	A10	A20	A40	A50	A70	C10 - C30		C20	E01
All engines	x 1, D.I.S.						9.6070	C10		

SIERRA I

1.3	Petrol	44	08/82-12/86	JCT

Engine	Information	A10	A20	A40	A50	A70	C10 - C30		C20	E01
All engines	version Bosch			2.7509PHT	3.7525RS					
All engines							9.6069	C10		4.9078

1.8	Petrol	66	10/84-12/86	REB

Engine	Information	A10	A20	A40	A50	A70	C10 - C30		C20	E01
All engines	version Bosch			2.7530/5PHT	3.7573/21RS					
All engines							9.6069	C10		

2.0	Petrol	66	08/82-10/84	NYT

Engine	Information	A10	A20	A40	A50	A70	C10 - C30		C20	E01
All engines	01/10/85 ->, version Bosch			2.7479PHT						
All engines	->year 01/10/84, version Bosch			2.7509PHT						
All engines	01/10/84 ->, ->year 01/10/85, version Bosch			2.7530/5PHT						
All engines	version Bosch				3.7525RS					

2.0	Petrol	74	10/85-12/86	NRD

Engine	Information	A10	A20	A40	A50	A70	C10 - C30		C20	E01
All engines	version Bosch			2.7479PHT	3.7573/21RS					

2.0	Petrol	77	08/82-12/86	NET

Engine	Information	A10	A20	A40	A50	A70	C10 - C30		C20	E01
All engines	01/10/85 ->, version Bosch			2.7479PHT						
All engines	->year 01/10/84, version Bosch			2.7509PHT	3.7525RS					
All engines	01/10/84 ->, ->year 01/10/85, version Bosch			2.7530/5PHT						
All engines	01/10/84 ->, version Bosch				3.7573/21RS					
All engines							9.6069	C10		

A10	CONDENSER	A20	CONTACT SET	A40	DISTRIBUTOR CAP	A50	ROTOR	A70	PICK-UP
C10	COIL	C20	IGNITION MODULE	C30	ELECTRONIC IGNITION KIT	E01	IGNITION CABLE SET		

The present application list is a brief version. For the detailed information about the possibility of installation on a specific vehicle, please refer to our web-catalogue http://catalogo.facet.eu/

Vehicle	alim.	kW	Date	Engine	FUNCTIONS ON THE VEHICLE A10	A20	A40	A50	A70	C10 - C30	C20	E01
2.0	Petrol	85	03/85-12/86	NR2								

Engine	Information	A10	A20	A40	A50	A70	C10 - C30	C20	E01
All engines	version Bosch			2.7479PHT	3.7573/21RS				
All engines	version Ford			2.7792PHT					

2.0 i	Petrol	85	03/85-12/86	NR2								

Engine	Information	A10	A20	A40	A50	A70	C10 - C30	C20	E01
All engines	version Bosch			2.7479PHT	3.7573/21RS				
All engines	version Ford			2.7792PHT					
All engines							9.6069 C10		

SIERRA II

1.6 i	Petrol	59	10/89-02/93	L6B								

Engine	Information	A10	A20	A40	A50	A70	C10 - C30	C20	E01
All engines							9.6035, 9.6212 C10		

1.8	Petrol	64	05/88-02/93	R2C, R6A								

Engine	Information	A10	A20	A40	A50	A70	C10 - C30	C20	E01
All engines	version Ford				3.7894RS				
All engines							9.6069, 9.6212 C10		

1.8 i	Petrol	0	01/92-12/93	HL18CFi-R6A								

Engine	Information	A10	A20	A40	A50	A70	C10 - C30	C20	E01
All engines							9.6035 C10		

2.0	Petrol	77	01/87-02/93	N8C, NES								

Engine	Information	A10	A20	A40	A50	A70	C10 - C30	C20	E01
All engines	version Bosch			2.7479PHT	3.7573/21RS				
All engines							9.6069 C10		

2.0 i	Petrol	85	01/87-02/93	N4A, N4I								

Engine	Information	A10	A20	A40	A50	A70	C10 - C30	C20	E01
All engines	version Bosch			2.7530/23PHT	3.7573/40RS				
All engines							9.6069 C10		

2.0 i	Petrol	92	06/89-02/93	N9B								

Engine	Information	A10	A20	A40	A50	A70	C10 - C30	C20	E01
All engines	version Bosch			2.7530/23PHT	3.7573/40RS				
All engines							9.6069 C10		

S-MAX I

2.0	Petrol	107	05/06-12/14	AODA, AODB, AODE, AOWA, AOWB								

Engine	Information	A10	A20	A40	A50	A70	C10 - C30	C20	E01
All engines	x 4, COIL ON PLUG						9.6380 C10		

2.0 Flexifuel	Petrol/ Ethanol	107	05/06-12/14	TBWA, TBWB								

Engine	Information	A10	A20	A40	A50	A70	C10 - C30	C20	E01
All engines	x 4, COIL ON PLUG						9.6380 C10		

2.5 ST	Petrol	162	05/06-12/14	HUWA								

Engine	Information	A10	A20	A40	A50	A70	C10 - C30	C20	E01
All engines	x 5, COIL ON PLUG						9.6378 C10		

S-MAX II

1.5 EcoBoost	Petrol	118	01/15-06/18	UNCI, UNCJ, UNCK								

Engine	Information	A10	A20	A40	A50	A70	C10 - C30	C20	E01
All engines	x 4, COIL ON PLUG						9.6523 C10		

A10	CONDENSER	A20	CONTACT SET	A40	DISTRIBUTOR CAP	A50	ROTOR	A70	PICK-UP
C10	COIL	C20	IGNITION MODULE	C30	ELECTRONIC IGNITION KIT	E01	IGNITION CABLE SET		

The present application list is a brief version. For the detailed information about the possibility of installation on a specific vehicle, please refer to our web-catalogue http://catalogo.facet.eu/

Vehicle	alim.	kW	Date	Engine	FUNCTIONS ON THE VEHICLE A10	A20	A40	A50	A70	C10 - C30	C20	E01
1.5 EcoBoost	Petrol	121	07/18->	6CF4G15, C15HDTX								

Engine	Information	A10	A20	A40	A50	A70	C10 - C30	C20	E01
All engines	x 4, COIL ON PLUG						9.6523 C10		

STREET KA

1.6	Petrol	70	05/03-07/05	CDRA, CDRB

Engine	Information	A10	A20	A40	A50	A70	C10 - C30	C20	E01
All engines	x 1, D.I.S.						9.6432 C10		
All engines									4.7208

TAUNUS

1.6	Petrol	54	07/79-07/82	LCJ

Engine	Information	A10	A20	A40	A50	A70	C10 - C30	C20	E01
All engines	version Ford		1.4144HDV	2.7783	3.7885				

TAUNUS 12M

1.2	Petrol	28	12/51-02/63	--

Engine	Information	A10	A20	A40	A50	A70	C10 - C30	C20	E01
All engines			1.2521						

1.2	Petrol	29	07/62-04/67	--

Engine	Information	A10	A20	A40	A50	A70	C10 - C30	C20	E01
All engines			1.2521						

1.2	Petrol	31	09/58-08/62	--

Engine	Information	A10	A20	A40	A50	A70	C10 - C30	C20	E01
All engines			1.2521						

1.5	Petrol	37	07/62-04/67	--

Engine	Information	A10	A20	A40	A50	A70	C10 - C30	C20	E01
All engines			1.2521						

1.5	Petrol	40	09/58-02/63	--

Engine	Information	A10	A20	A40	A50	A70	C10 - C30	C20	E01
All engines			1.2521						

1.5 TS	Petrol	37	12/62-04/67	--

Engine	Information	A10	A20	A40	A50	A70	C10 - C30	C20	E01
All engines			1.2521						

1.5 TS	Petrol	48	12/62-04/67	--

Engine	Information	A10	A20	A40	A50	A70	C10 - C30	C20	E01
All engines			1.2521						

TAUNUS 15M

1.5	Petrol	40	12/54-07/71	--, TV 15 H

Engine	Information	A10	A20	A40	A50	A70	C10 - C30	C20	E01
All engines			1.2521						

1.5	Petrol	44	09/54-08/58	--

Engine	Information	A10	A20	A40	A50	A70	C10 - C30	C20	E01
All engines			1.2521						

1.5 XL/RS	Petrol	40	01/68-06/71	--, TV 15 H

Engine	Information	A10	A20	A40	A50	A70	C10 - C30	C20	E01
All engines			1.2521						

A10	CONDENSER	**A20**	CONTACT SET	**A40**	DISTRIBUTOR CAP	**A50**	ROTOR	**A70**	PICK-UP
C10	COIL	**C20**	IGNITION MODULE	**C30**	ELECTRONIC IGNITION KIT	**E01**	IGNITION CABLE SET		

The present application list is a brief version. For the detailed information about the possibility of installation on a specific vehicle, please refer to our web-catalogue http://catalogo.facet.eu/

Vehicle	alim.	kW	Date	Engine	FUNCTIONS ON THE VEHICLE A10	A20	A40	A50	A70	C10 - C30	C20	E01
TAUNUS 17M												
1.5	Petrol	40	09/60-01/65	--								
Engine: All engines	Information:					1.2521						
1.5	Petrol	44	09/64-10/68	--								
Engine: All engines	Information:					1.2521	2.7462					
1.7	Petrol	44	08/57-11/60	--								
Engine: All engines	Information:					1.2521		3.7518RS				
1.7	Petrol	48	09/64-04/74	--								
Engine: All engines	Information:					1.2521						
1.7	Petrol	55	12/67-04/74	--								
Engine: All engines	Information:					1.2521						
1.7 S	Petrol	48	09/60-01/65	--								
Engine: All engines	Information:					1.2521						
1.7 S	Petrol	55	11/61-01/65	--								
Engine: All engines	Information:					1.2521						
TOURNEO												
1.8 BiFuel	CNG	85	08/05-12/06	EYPDCNG								
Engine: All engines	Information: x 1, D.I.S.									9.6432 C10		
1.8 LPG	LPG	85	08/05-12/06	EYPC								
Engine: All engines	Information: x 1, D.I.S.									9.6432 C10		
TOURNEO CONNECT I												
1.8 16V	Petrol	85	06/02-12/13	EYPA, EYPC, EYPD								
Engine: All engines	Information: x 1, D.I.S.									9.6432 C10		
Engine: All engines	Information:											4.9624
TOURNEO COURIER												
1.0 EcoBoost	Petrol	74	02/14->	SFCA, SFCB, SFCC, SFCD, SFCE, SFCF								
Engine: All engines	Information: x 3, COIL ON PLUG									9.6519 C10		
TOURNEO CUSTOM												
1.0 EcoBoost PHEV	Petrol/ Electric	92	04/20->	M1FA								
Engine: All engines	Information: x 3, COIL ON PLUG									9.6519 C10		
TRANSIT												
1.8 CNG	CNG	85	05/02-12/13	EYPDCNG								
Engine: All engines	Information: Transit Connect, x 1, D.I.S.									9.6432 C10		

A10	CONDENSER	**A20**	CONTACT SET	**A40**	DISTRIBUTOR CAP	**A50**	ROTOR	**A70**	PICK-UP
C10	COIL	**C20**	IGNITION MODULE	**C30**	ELECTRONIC IGNITION KIT	**E01**	IGNITION CABLE SET		

The present application list is a brief version. For the detailed information about the possibility of installation on a specific vehicle, please refer to our web-catalogue http://catalogo.facet.eu/

Vehicle	alim.	kW	Date	Engine	FUNCTIONS ON THE VEHICLE: A10	A20	A40	A50	A70	C10 - C30	C20	E01
2.0	CNG	84	06/94-03/00	NSHCNG								
All engines				Transit 100, Transit 150, ->year 01/08/94, x 1, Colour:Red, DISTRIBUTOR, 12 Volt, Dia: 55 mm, connector type DIN						9.6069 C10		
TRANSIT CONNECT I												
1.8 16V	Petrol	85	06/02-12/13	EYPA, EYPC, EYPD								
All engines				Transit Connect, x 1, D.I.S.						9.6432 C10		
All engines												4.9624
1.8 16V LPG	Petrol/ Liquified Petroleum Gas (LPG)	85	06/02-12/13	EYPA, EYPC, EYPD								
All engines				Transit Connect, x 1, D.I.S.						9.6432 C10		
Eng. EYPC												4.9624
TRANSIT CONNECT II												
1.0 EcoBoost	Petrol	74	02/13->	M2GA, M2GB								
All engines				Transit Connect, x 3, COIL ON PLUG						9.6519 C10		
TRANSIT COURIER												
1.0 EcoBoost	Petrol	74	02/14->	SFCA, SFCB, SFCC, SFCD, SFCE, SFCF								
All engines				x 3, COIL ON PLUG						9.6519 C10		
TRANSIT CUSTOM												
1.0 EcoBoost PHEV	Petrol/ Electric	92	04/20->	M1FA								
All engines				Transit Custom 320, Transit Custom 340, x 3, COIL ON PLUG						9.6519 C10		
TRANSIT I												
1.5	Petrol	40	06/58-08/65	--								
All engines						1.2521						
1.6	Petrol	48	11/77-10/86	4RB								
All engines				version Ford		1.4144HDV	2.7783	3.7885				
All engines				version Bosch, alternatively			2.7479PHT, 2.7509PHT					
All engines				version Bosch				3.7512RS				
1250 S-2 Klein-LKW	Petrol	40	10/57-07/67	--								
All engines						1.2521						
2.0	Petrol	43	11/77-07/82	4RC								
All engines				version Ford		1.4144HDV	2.7783	3.7885				
All engines				version Bosch			2.7479PHT	3.7512RS				
K-40 1.5	Petrol	40	04/55-04/67	--								
All engines						1.2521						

A10	CONDENSER	**A20**	CONTACT SET	**A40**	DISTRIBUTOR CAP	**A50**	ROTOR	**A70**	PICK-UP
C10	COIL	**C20**	IGNITION MODULE	**C30**	ELECTRONIC IGNITION KIT	**E01**	IGNITION CABLE SET		

The present application list is a brief version. For the detailed information about the possibility of installation on a specific vehicle, please refer to our web-catalogue http://catalogo.facet.eu/

Vehicle	alim.	kW	Date	Engine	FUNCTIONS ON THE VEHICLE A10	A20	A40	A50	A70	C10 - C30	C20	E01

TRANSIT II

				ENGINE
1.6	Petrol	46	09/85-09/92	LAC, LAT

Engine	Information	A10	A20	A40	A50	A70	C10 - C30		C20	E01
All engines	version Bosch		1.2549HDVS		3.7525RS					
All engines	version Bosch, alternatively			2.7479PHT, 2.7509PHT						
All engines							9.6069	C10		4.9078

				ENGINE
2.0	Petrol	56	10/85-03/91	NAW

Engine	Information	A10	A20	A40	A50	A70	C10 - C30		C20	E01
All engines	version Bosch		1.2549HDVS		3.7525RS					
All engines	version Bosch, alternatively			2.7479PHT, 2.7509PHT						
All engines							9.6069	C10		
All engines	->year 31/08/91									4.9078

				ENGINE
2.0	Petrol	57	09/85-09/92	NAT, NAV

Engine	Information	A10	A20	A40	A50	A70	C10 - C30		C20	E01
All engines	version Bosch		1.2549HDVS		3.7525RS					
All engines	version Bosch, alternatively			2.7479PHT, 2.7509PHT						
All engines							9.6069	C10		
All engines	->year 31/08/91									4.9078

				ENGINE
2.0	Petrol	60	10/85-03/91	N6TS

Engine	Information	A10	A20	A40	A50	A70	C10 - C30		C20	E01
All engines	version Bosch			2.7479PHT	3.7573/21RS					
All engines							9.6069	C10		
All engines	->year 31/08/91									4.9078

				ENGINE
2.0	Petrol	66	09/91-09/94	NBA

Engine	Information	A10	A20	A40	A50	A70	C10 - C30		C20	E01
All engines	version Bosch, alternatively			2.7479PHT, 2.7509PHT						
All engines	version Bosch				3.7525RS					
All engines							9.6069	C10		

				ENGINE
2.0	Petrol	72	09/91-08/94	NCA

Engine	Information	A10	A20	A40	A50	A70	C10 - C30		C20	E01
All engines	version Bosch, alternatively			2.7479PHT, 2.7509PHT						
All engines	version Bosch				3.7525RS					
All engines							9.6069	C10		

				ENGINE
2.0	Petrol	84	06/94-03/00	NSF, NSG, NSH

Engine	Information	A10	A20	A40	A50	A70	C10 - C30		C20	E01
Eng. NSF, NSG	version Bosch			2.7530/23PHT	3.7573/40RS					
All engines	Transit 100, Transit 80, ->year 01/08/94, x 1, Colour:Red, DISTRIBUTOR, 12 Volt, Dia: 55 mm, connector type DIN						9.6069	C10		

				ENGINE
2.0 Cat	Petrol	57	11/85-09/92	N6T

Engine	Information	A10	A20	A40	A50	A70	C10 - C30		C20	E01
All engines	version Bosch			2.7479PHT	3.7573/21RS					
All engines							9.6069	C10		
All engines	->year 31/08/91									4.9078

				ENGINE
2.0 CNG	Petrol/ Com-pressed Natural Gas (CNG)	84	06/94-03/00	NSH

Engine	Information	A10	A20	A40	A50	A70	C10 - C30		C20	E01
All engines	version Bosch			2.7530/23PHT	3.7573/40RS					

A10	CONDENSER	A20	CONTACT SET	A40	DISTRIBUTOR CAP	A50	ROTOR	A70	PICK-UP
C10	COIL	C20	IGNITION MODULE	C30	ELECTRONIC IGNITION KIT	E01	IGNITION CABLE SET		

The present application list is a brief version. For the detailed information about the possibility of installation on a specific vehicle, please refer to our web-catalogue http://catalogo.facet.eu/

Vehicle	alim.	kW	Date	Engine	FUNCTIONS ON THE VEHICLE: A10	A20	A40	A50	A70	C10 - C30	C20	E01
2.0 i	Petrol	72	09/91-07/94	**NCA**								
All engines	version Bosch, alternatively						2.7479PHT, 2.7509PHT					
All engines	version Bosch							3.7525RS				
All engines										9.6069 C10		
2.0 L	Petrol	56	10/85-03/91	**NAW, NAX**								
All engines	version Bosch					1.2549HDVS		3.7525RS				
All engines	version Bosch, alternatively						2.7479PHT, 2.7509PHT					
All engines										9.6069 C10		4.9078
2.9 i	Petrol	107	01/91-09/94	**BRT**								
All engines	version Bosch						2.7481PHT					
All engines										9.6069 C10		
TRANSIT III												
2.3	Petrol	105	03/01-03/06	**E5FC**								
All engines	version Bosch											4.9145
2.3	Petrol	107	08/00-03/06	**E5FA**								
All engines	version Bosch											4.9145
2.3 16V	Petrol	107	04/01-05/06	**E5FA, E5FC**								
All engines	version Bosch											4.9145
2.3 16V CNG RWD	Petrol/ Compressed Natural Gas (CNG)	100	04/06-08/14	**GZFC**								
All engines	Transit 300, x 4, COIL ON PLUG									9.6380 C10		
2.3 16V LPG RWD	Petrol/ Liquified Petroleum Gas (LPG)	107	04/06-08/14	**GZFC**								
All engines	Transit 300, x 4, COIL ON PLUG									9.6380 C10		
2.3 16V RWD	Petrol	107	08/00-08/14	**E5FA, E5FC, GZFA, GZFB, GZFC**								
Eng. GZFA, GZFB, GZFC	Transit 300, x 4, COIL ON PLUG									9.6380 C10		
Eng. E5FA, E5FC	version Bosch											4.9145
TRANSIT TOURNEO												
2.0	Petrol	84	11/94-12/00	**NSF, NSG, NSH**								
Eng. NSH	version Bosch						2.7530/23PHT	3.7573/40RS				
All engines	->year 01/08/94, x 1, Colour:Red, DISTRIBUTOR, 12 Volt, Dia: 55 mm, connector type DIN									9.6069 C10		
WINDSTAR												
3.0 i 12V	Petrol	109	04/95-07/97	**99U**								
All engines										9.6070 C10		

A10	CONDENSER	**A20**	CONTACT SET	**A40**	DISTRIBUTOR CAP	**A50**	ROTOR	**A70**	PICK-UP
C10	COIL	**C20**	IGNITION MODULE	**C30**	ELECTRONIC IGNITION KIT	**E01**	IGNITION CABLE SET		

The present application list is a brief version. For the detailed information about the possibility of installation on a specific vehicle, please refer to our web-catalogue http://catalogo.facet.eu/

Vehicle	alim.	kW	Date	Engine	FUNCTIONS ON THE VEHICLE							
					A10	A20	A40	A50	A70	C10 - C30	C20	E01
3.0 i 12V S	Petrol	112	08/97->	99U								
All engines										9.6070 C10		

ZEPHYR

1.7	Petrol	41	12/62-10/66	--								
All engines							2.8070	3.8106				
1.7	Petrol	44	03/62-03/68	--, EL 17 L								
All engines							2.8070	3.8106				
1.7	Petrol	48	03/62-03/68	EL 17 L								
All engines							2.8070	3.8106				
2.0	Petrol	57	03/68-10/72	EV 20 A								
All engines								3.8107				
2.0	Petrol	61	03/68-10/72	EV 20 B								
All engines								3.8107				
2.5	Petrol	65	03/62-03/68	EL25								
All engines								3.8107				
2.5	Petrol	68	03/62-03/68	EL 25 L								
All engines								3.8107				
2.5	Petrol	73	03/68-10/72	EV 25 B								
All engines								3.8107				
2.5	Petrol	76	03/68-10/72	EV 25 L								
All engines								3.8107				
3.0	Petrol	88	03/68-10/72	EV 30 A								
All engines								3.8107				
3.0	Petrol	94	03/68-10/72	EV30B								
All engines								3.8107				

ZODIAK

2.5	Petrol	73	03/62-10/72	EL 25 LV								
All engines								3.8107				
2.5	Petrol	78	03/62-10/72	EL 25 HV								
All engines								3.8107				

A10	CONDENSER	A20	CONTACT SET	A40	DISTRIBUTOR CAP	A50	ROTOR	A70	PICK-UP
C10	COIL	C20	IGNITION MODULE	C30	ELECTRONIC IGNITION KIT	E01	IGNITION CABLE SET		

The present application list is a brief version. For the detailed information about the possibility of installation on a specific vehicle, please refer to our web-catalogue http://catalogo.facet.eu/

Vehicle	alim.	kW	Date	Engine	FUNCTIONS ON THE VEHICLE							
					A10	A20	A40	A50	A70	C10 - C30	C20	E01
FIESTA												
				ENGINE								
1.0i	Petrol	48	07/99->	ZL10								
Engine	Information				A10	A20	A40	A50	A70	C10 - C30	C20	E01
All engines										9.6432 C10		4.9691
				ENGINE								
1.6i	Petrol	70	07/99->	ZL16								
Engine	Information				A10	A20	A40	A50	A70	C10 - C30	C20	E01
All engines										9.6432 C10		4.9691

A10	CONDENSER	A20	CONTACT SET	A40	DISTRIBUTOR CAP	A50	ROTOR	A70	PICK-UP
C10	COIL	C20	IGNITION MODULE	C30	ELECTRONIC IGNITION KIT	E01	IGNITION CABLE SET		

The present application list is a brief version. For the detailed information about the possibility of installation on a specific vehicle, please refer to our web-catalogue http://catalogo.facet.eu/

Vehicle	alim.	kW	Date	Engine	FUNCTIONS ON THE VEHICLE A10	A20	A40	A50	A70	C10 - C30	C20	E01
CORTINA												
2.0	Petrol	66	06/77-08/82	--								
All engines	version Bosch					1.2534HDVS	2.7479PHT	3.7512RS				
FAIRLANE												
3.2i EFi	Petrol	0	01/89->	--								
All engines	version Bosch						2.7530/14PHT	3.7573/31				
3.9i EFi	Petrol	0	01/89->	--								
All engines	version Bosch						2.7530/14PHT	3.7573/31				
3.9i MPEFi	Petrol	0	01/89->	--								
All engines	version Bosch						2.7530/14PHT	3.7573/31				
4.0i MPEFi	Petrol	0	01/89->	--								
All engines	version Bosch						2.7530/14PHT	3.7573/31				
FALCON												
3.2 Efi	Petrol	90	03/88-12/88	--								
All engines	version Bosch						2.7530/14PHT	3.7573/31				
3.3	Petrol	88	02/86-12/87	--								
All engines	version Bosch						2.7530/14PHT					
3.3	Petrol	90	10/84-02/86	--								
All engines	version Bosch						2.7530/14PHT					
3.9 Efi	Petrol	120	07/91-04/92	--								
All engines	version Bosch						2.7530/14PHT	3.7573/31				
3.9 MPFi	Petrol	139	03/88-04/92	--								
All engines	version Bosch						2.7530/14PHT	3.7573/31				
3.9 SPFi	Petrol	120	03/88-04/92	--								
All engines	version Bosch						2.7530/14PHT	3.7573/31				
4.1	Petrol	103	10/84-02/86	--								
All engines	version Bosch						2.7530/14PHT					
LASER												
1.3	Petrol	49	03/81-09/87	E3								
All engines	version Mitsubishi						2.8303/1, 2.8322/18, 2.8322/9	3.8323				
1.5	Petrol	54	03/81-09/85	E5								
All engines	version Mitsubishi						2.8303/1, 2.8322/9	3.8323				

A10	CONDENSER	**A20**	CONTACT SET	**A40**	DISTRIBUTOR CAP	**A50**	ROTOR	**A70**	PICK-UP
C10	COIL	**C20**	IGNITION MODULE	**C30**	ELECTRONIC IGNITION KIT	**E01**	IGNITION CABLE SET		

The present application list is a brief version. For the detailed information about the possibility of installation on a specific vehicle, please refer to our web-catalogue http://catalogo.facet.eu/

Vehicle	alim.	kW	Date	Engine	FUNCTIONS ON THE VEHICLE A10	A20	A40	A50	A70	C10 - C30	C20	E01
1.5	Petrol	59	03/83-09/85	E5								
Engine: All engines — Information: version Mitsubishi							2.8322/9					
1.5 Sport	Petrol	58	03/81-02/83	E5								
Engine: All engines — Information: version Mitsubishi							2.8303/1	3.8323				
1.6	Petrol	64	03/90-09/91	B6 (SOHC 16 V)								
Engine: All engines — Information: version Mitsubishi							2.8322/31	3.8331/19				
1.6 i	Petrol	80	10/94-03/99	B6 (DOHC 16 V)								
Engine: All engines — Information: version Mitsubishi							2.8322/50	3.8331/32				
1.8 i	Petrol	92	10/94-03/99	BP (DOHC)								
Engine: All engines — Information: version Mitsubishi							2.8322/50	3.8331/32				
METEOR												
1.5	Petrol	54	04/82-09/85	E5								
Engine: All engines — Information: version Mitsubishi							2.8322/9					
1.5	Petrol	59	04/82-09/85	E5								
Engine: All engines — Information: version Mitsubishi							2.8322/9					
TAURUS												
3.0i V6	Petrol	0	01/96->	--								
Engine: All engines — Information:										9.6070 C10		
TELSTAR												
2.0 EFi	Petrol	85	10/94-11/96	FS								
Engine: All engines — Information: version Hitachi, no specific info conc. application available							2.7977, 2.7992	3.7994, 3.8002				
2.0 TX5	Petrol	70	05/83-10/87	FE								
Engine: All engines — Information: version Mitsubishi							2.8322/9					
2.5	Petrol	120	01/92-08/94	KL-ZE								
Engine: All engines — Information: version Mitsubishi, no specific info conc. application available							2.8322/37, 2.8322/49	3.8331/33, 3.8331/34				
2.5	Petrol	123	01/92-10/95	KL-ZE								
Engine: All engines — Information: version Mitsubishi, no specific info conc. application available							2.8322/37, 2.8322/49	3.8331/33, 3.8331/34				
2.5 TX5 EFi	Petrol	120	10/94-11/96	KL-ZE								
Engine: All engines — Information: version Mitsubishi, no specific info conc. application available							2.8322/37, 2.8322/49	3.8331/33, 3.8331/34				

A10	CONDENSER	A20	CONTACT SET	A40	DISTRIBUTOR CAP	A50	ROTOR	A70	PICK-UP
C10	COIL	C20	IGNITION MODULE	C30	ELECTRONIC IGNITION KIT	E01	IGNITION CABLE SET		

The present application list is a brief version. For the detailed information about the possibility of installation on a specific vehicle, please refer to our web-catalogue http://catalogo.facet.eu/

Vehicle	alim.	kW	Date	Engine	FUNCTIONS ON THE VEHICLE							
					A10	A20	A40	A50	A70	C10 - C30	C20	E01

EXPLORER

				ENGINE
4.0 V6 4WD	Petrol	115	03/95-12/01	--

Engine	Information	A10	A20	A40	A50	A70	C10 - C30		C20	E01
All engines							9.6189	C10		

				ENGINE
4.0 V6 4WD	Petrol	121	01/93-12/94	--

Engine	Information	A10	A20	A40	A50	A70	C10 - C30		C20	E01
All engines							9.6189	C10		

				ENGINE
4.0 V6 4WD	Petrol	150	10/98-12/01	--

Engine	Information	A10	A20	A40	A50	A70	C10 - C30		C20	E01
All engines							9.6189	C10		

				ENGINE
4.0 V6 4WD	Petrol	152	10/96-12/01	--

Engine	Information	A10	A20	A40	A50	A70	C10 - C30		C20	E01
All engines							9.6189	C10		

MUSTANG

				ENGINE
4.0 V6	Petrol	157	12/04-12/10	--

Engine	Information	A10	A20	A40	A50	A70	C10 - C30		C20	E01
All engines							9.6189	C10		

PROBE II

				ENGINE
2.5 V6 24V	Petrol	119	10/93-03/98	KL

Engine	Information	A10	A20	A40	A50	A70	C10 - C30		C20	E01
All engines	->year 30/11/94, version Mitsubishi			2.8322/37	3.8331/33					
All engines	01/12/94 ->, version Mitsubishi				3.8331/34					

				ENGINE
2.5 V6 24V	Petrol	120	12/94-03/98	KL

Engine	Information	A10	A20	A40	A50	A70	C10 - C30		C20	E01
All engines	->year 30/11/94, version Mitsubishi			2.8322/37	3.8331/33					
All engines	01/12/94 ->, version Mitsubishi				3.8331/34					

WINDSTAR

				ENGINE
3.0 V6	Petrol	108	01/95-12/00	99U30

Engine	Information	A10	A20	A40	A50	A70	C10 - C30		C20	E01
All engines	x 1, D.I.S.						9.6070	C10		

				ENGINE
3.0 V6	Petrol	109	03/95-02/99	--, 99U30

Engine	Information	A10	A20	A40	A50	A70	C10 - C30		C20	E01
Eng. --							9.6070	C10		
Eng. 99U30	x 1, D.I.S.						9.6070	C10		

A10	CONDENSER	A20	CONTACT SET	A40	DISTRIBUTOR CAP	A50	ROTOR	A70	PICK-UP
C10	COIL	C20	IGNITION MODULE	C30	ELECTRONIC IGNITION KIT	E01	IGNITION CABLE SET		

The present application list is a brief version. For the detailed information about the possibility of installation on a specific vehicle, please refer to our web-catalogue http://catalogo.facet.eu/

Vehicle	alim.	kW	Date	Engine	FUNCTIONS ON THE VEHICLE							
					A10	A20	A40	A50	A70	C10 - C30	C20	E01

126P

				ENGINE
0.6	Petrol	17	09/72-07/77	--

Engine	Information	A10	A20	A40	A50	A70	C10 - C30		C20	E01
All engines	->year 31/07/77, version Marelli		1.4920	2.8186	3.8240					
All engines	->year 31/07/77						9.6001D	C10		

				ENGINE
0.6	Petrol	22	07/77-12/91	126 A1.048

Engine	Information	A10	A20	A40	A50	A70	C10 - C30		C20	E01
All engines	01/08/77 ->, version Marelli	0.0628								
All engines	01/01/87 ->, version Marelli		1.4946M							
All engines	01/08/77 ->, ->year 31/12/86, version Marelli		1.4950M							
All engines	version Zelmot		1.7350							

POLONEZ I

				ENGINE
1.5	Petrol	55	10/77-08/88	AA

Engine	Information	A10	A20	A40	A50	A70	C10 - C30		C20	E01
All engines	version Marelli		1.4927							
All engines							9.6001D	C10		

A10	CONDENSER	A20	CONTACT SET	A40	DISTRIBUTOR CAP	A50	ROTOR	A70	PICK-UP
C10	COIL	C20	IGNITION MODULE	C30	ELECTRONIC IGNITION KIT	E01	IGNITION CABLE SET		

The present application list is a brief version. For the detailed information about the possibility of installation on a specific vehicle, please refer to our web-catalogue http://catalogo.facet.eu/

Vehicle	alim.	kW	Date	Engine	FUNCTIONS ON THE VEHICLE							
					A10	A20	A40	A50	A70	C10 - C30	C20	E01

G15

				ENGINE
0.9	Petrol	38	01/67-12/75	--

Engine	Information	A10	A20	A40	A50	A70	C10 - C30	C20	E01
All engines					3.8106				

A10	CONDENSER	A20	CONTACT SET	A40	DISTRIBUTOR CAP	A50	ROTOR	A70	PICK-UP
C10	COIL	C20	IGNITION MODULE	C30	ELECTRONIC IGNITION KIT	E01	IGNITION CABLE SET		

The present application list is a brief version. For the detailed information about the possibility of installation on a specific vehicle, please refer to our web-catalogue http://catalogo.facet.eu/

Vehicle	alim.	kW	Date	Engine	FUNCTIONS ON THE VEHICLE A10	A20	A40	A50	A70	C10 - C30	C20	E01
APOLLO												
2.0	Petrol	82	08/89-08/91	3S-FC								
All engines	version Denso						2.7630/48	3.7629				
All engines										9.6099 C10		
2.0 i	Petrol	88	08/89-02/93	3S-FE								
All engines	version Denso							3.7629				
All engines										9.6097 C10		
2.2 i	Petrol	93	03/93-05/97	08GR-FXS								
All engines	01/10/93 ->, version Denso						2.7630/37					
All engines	version Denso							3.7629				
All engines										9.6098 C10		
All engines	01/10/93 ->											4.9793
ASTRA_LB												
1.5	Petrol	51	08/84-01/86	E15								
All engines	->year 31/01/85, version Hitachi					1.4456HDV	2.7903					
All engines	01/02/85 ->, version Hitachi						2.7957	3.7952				
ASTRA_LC												
1.6	Petrol	52	02/86-06/87	E16S								
All engines	version Hitachi						2.7957	3.7952				
ASTRA_LD												
1.6i	Petrol	55	07/87-07/89	16LE								
All engines	version Delco Remy						2.7575PHT	3.7598				
1.8i Hatchback	Petrol	79	07/87-07/89	18LE								
All engines	version Delco Remy						2.7575PHT	3.7598				
1.8i Sedan	Petrol	79	07/87-07/89	18LE								
All engines	version Delco Remy						2.7575PHT	3.7598				
ASTRA_TR												
1.8i 16v Hatchback	Petrol	85	09/96-09/98	C18SEL								
All engines										9.6172 C10		4.9562
1.8i 16v Sedan	Petrol	85	09/96-09/98	C18SEL								
All engines										9.6172 C10		4.9562
2.0i 16V Hatchback	Petrol	100	09/96-09/98	X20XEV								
All engines										9.6172 C10		4.9562
BARINA												
1.3	Petrol	50	08/86-12/89	G13A								
All engines	version Denso							3.7628				

A10	CONDENSER	A20	CONTACT SET	A40	DISTRIBUTOR CAP	A50	ROTOR	A70	PICK-UP
C10	COIL	C20	IGNITION MODULE	C30	ELECTRONIC IGNITION KIT	E01	IGNITION CABLE SET		

The present application list is a brief version. For the detailed information about the possibility of installation on a specific vehicle, please refer to our web-catalogue http://catalogo.facet.eu/

Vehicle	alim.	kW	Date	Engine	FUNCTIONS ON THE VEHICLE A10	A20	A40	A50	A70	C10 - C30	C20	E01
1.3 GL	Petrol	50	02/89-05/94	**410UF01 5G02**								

Engine	Information	A10	A20	A40	A50	A70	C10 - C30	C20	E01
All engines	ch. JSAE8MG6800148088 ->, ch. JSAE8MS7700141225 ->, version Mitsubishi			2.8322/31					
All engines	->ch. JSAE8MG6800148087, ->ch. JSAE8MS7700141225, version Mitsubishi			2.8322/32	3.8331/8				
All engines	ch. JSAE8MG6800148088 ->, ch. JSAE8MS7700141226 ->, version Mitsubishi				3.8331/19				

1.3 GL	Petrol	52	02/85-08/86	**G13A**

Engine	Information	A10	A20	A40	A50	A70	C10 - C30	C20	E01
All engines	version Denso				3.7628				

1.4 i	Petrol	44	04/94-07/97	**C 14 NZ**

Engine	Information	A10	A20	A40	A50	A70	C10 - C30	C20	E01
All engines	version Bosch			2.7530/26PHT	3.7573/21RS				
All engines	version Lucas			2.8100PHT	3.8128RS				
All engines							9.6040 C10	9.4036	4.9237

1.6	Petrol	78	05/97-08/00	**X 16 XE**

Engine	Information	A10	A20	A40	A50	A70	C10 - C30	C20	E01
All engines									4.8688

BARINA_SB

1.2i	Petrol	33	04/94-07/97	**C12NZ**

Engine	Information	A10	A20	A40	A50	A70	C10 - C30	C20	E01
All engines	version Bosch			2.7530/26PHT	3.7573/21RS				
All engines	version Lucas			2.8100PHT	3.8128RS				
All engines							9.6040 C10	9.4036	4.9237

1.6i	Petrol	78	12/95-09/98	**X16XE**

Engine	Information	A10	A20	A40	A50	A70	C10 - C30	C20	E01
All engines									4.8688

1.6i	Petrol	80	04/94-11/95	**C16XE**

Engine	Information	A10	A20	A40	A50	A70	C10 - C30	C20	E01
All engines									4.8688

CALAIS

3.0 Executive	Petrol	114	10/88-09/90	--

Engine	Information	A10	A20	A40	A50	A70	C10 - C30	C20	E01
All engines							9.6119 C10		

CALAIS_VL

2.0i	Petrol	95	01/86-07/88	**2.0 PFI**

Engine	Information	A10	A20	A40	A50	A70	C10 - C30	C20	E01
All engines							9.6119 C10		

3.0i Turbo	Petrol	154	01/86-07/88	**3.0 EFI TURBO**

Engine	Information	A10	A20	A40	A50	A70	C10 - C30	C20	E01
All engines							9.6119 C10		

CALAIS_VN

5.0i	Petrol	165	08/88-09/91	**5.0 V8 EFI**

Engine	Information	A10	A20	A40	A50	A70	C10 - C30	C20	E01
All engines	version Bosch			2.7512PHT	3.7573/31				

CALAIS_VP

5.0i Sedan	Petrol	165	10/91-07/93	**5.0 V8 EFI**

Engine	Information	A10	A20	A40	A50	A70	C10 - C30	C20	E01
All engines	version Bosch			2.7512PHT	3.7573/31				

A10	CONDENSER	**A20**	CONTACT SET	**A40**	DISTRIBUTOR CAP	**A50**	ROTOR	**A70**	PICK-UP
C10	COIL	**C20**	IGNITION MODULE	**C30**	ELECTRONIC IGNITION KIT	**E01**	IGNITION CABLE SET		

The present application list is a brief version. For the detailed information about the possibility of installation on a specific vehicle, please refer to our web-catalogue http://catalogo.facet.eu/

Vehicle	alim.	kW	Date	Engine	FUNCTIONS ON THE VEHICLE A10	A20	A40	A50	A70	C10 - C30	C20	E01

CALAIS_VR

				ENGINE
5.0i Sedan	Petrol	165	07/93-04/95	5.0 PFI V8

Engine	Information	A10	A20	A40	A50	A70	C10 - C30	C20	E01
All engines	version Bosch			2.7512PHT	3.7573/31				

CALAIS_VS

				ENGINE
5.0i Sedan	Petrol	165	04/95-05/96	5.0 V8 PFI

Engine	Information	A10	A20	A40	A50	A70	C10 - C30	C20	E01
All engines	version Bosch			2.7512PHT	3.7573/31				

CALAIS_VS-II

				ENGINE
5.0i Sedan	Petrol	165	06/96-08/97	5.0 V8 PFI

Engine	Information	A10	A20	A40	A50	A70	C10 - C30	C20	E01
All engines	version Bosch			2.7512PHT	3.7573/31				

CALIBRA_YE

				ENGINE
2.0i	Petrol	85	09/91-07/95	C20NE

Engine	Information	A10	A20	A40	A50	A70	C10 - C30	C20	E01
All engines	version Bosch			2.7530/27PHT	3.7573/27RS				
All engines	eng. type 14672353 ->								4.8689

				ENGINE
2.0i 16V	Petrol	100	08/95-10/97	X20XEV

Engine	Information	A10	A20	A40	A50	A70	C10 - C30	C20	E01
All engines							9.6172 C10		4.9562

				ENGINE
2.0i 16V	Petrol	110	09/91-07/95	C20XE

Engine	Information	A10	A20	A40	A50	A70	C10 - C30	C20	E01
All engines	version Bosch			2.7530/27PHT					
All engines	ch. P1000001, P9000001 ->						9.6173 C10		4.8688

				ENGINE
2.0i 16V Turbo	Petrol	150	06/94-10/97	C20LET

Engine	Information	A10	A20	A40	A50	A70	C10 - C30	C20	E01
All engines	version Bosch			2.7530/27PHT					

CAMIRA

				ENGINE
1.6	Petrol	64	08/82-02/86	16JH

Engine	Information	A10	A20	A40	A50	A70	C10 - C30	C20	E01
All engines	version Bosch			2.7480PHT	3.7556RS				

				ENGINE
1.8 MPFi	Petrol	83	11/84-01/86	6TZ204XS85K01

Engine	Information	A10	A20	A40	A50	A70	C10 - C30	C20	E01
All engines	version Bosch			2.7480PHT	3.7556RS				

				ENGINE
1.8 SPFi	Petrol	63	02/86-03/87	6TZ204XS85K01

Engine	Information	A10	A20	A40	A50	A70	C10 - C30	C20	E01
All engines	version Bosch			2.7480PHT	3.7556RS				
All engines	version Delco Remy			2.7575PHT	3.7598				

				ENGINE
2.0 i	Petrol	85	04/87-07/89	C 20 JE

Engine	Information	A10	A20	A40	A50	A70	C10 - C30	C20	E01
All engines	version Delco Remy			2.7575PHT	3.7598				

CAPRICE_VQ

				ENGINE
5.0i Sedan	Petrol	165	03/90-11/93	5.0 V8 EFI

Engine	Information	A10	A20	A40	A50	A70	C10 - C30	C20	E01
All engines	version Bosch			2.7512PHT	3.7573/31				

CAPRICE_VR

				ENGINE
5.0i Sedan	Petrol	165	12/93-04/95	5.0 PFI V8

Engine	Information	A10	A20	A40	A50	A70	C10 - C30	C20	E01
All engines	version Bosch			2.7512PHT	3.7573/31				

A10	CONDENSER	A20	CONTACT SET	A40	DISTRIBUTOR CAP	A50	ROTOR	A70	PICK-UP
C10	COIL	C20	IGNITION MODULE	C30	ELECTRONIC IGNITION KIT	E01	IGNITION CABLE SET		

The present application list is a brief version. For the detailed information about the possibility of installation on a specific vehicle, please refer to our web-catalogue http://catalogo.facet.eu/

Vehicle	alim.	kW	Date	Engine	FUNCTIONS ON THE VEHICLE A10	A20	A40	A50	A70	C10 - C30	C20	E01
CAPRICE_VS												
5.0i Sedan	Petrol	165	03/95-08/96	**5.0 V8 PFI**								
Engine: All engines	Information: version Bosch						2.7512PHT	3.7573/31				
CAPRICE_VS-II												
5.0i Sedan	Petrol	165	09/96-08/97	**5.0 V8 PFI**								
Engine: All engines	Information: version Bosch						2.7512PHT	3.7573/31				
COMBO												
1.4 i	Petrol	44	03/96-07/97	**C 14 NZ**								
Engine: All engines	Information: version Bosch						2.7530/26PHT	3.7573/21RS				
All engines	version Lucas						2.8100PHT	3.8128RS				
All engines										9.6040 C10	9.4036	4.9237
COMBO_SB												
1.4i	Petrol	44	04/94-07/97	**C14NZ**								
Engine: All engines	Information: version Bosch						2.7530/26PHT	3.7573/21RS				
All engines	version Lucas						2.8100PHT	3.8128RS				
All engines										9.6040 C10	9.4036	4.9237
COMMODORE												
1.9	Petrol	54	09/78-04/86	**--, 1X**								
Engine: All engines	Information: version Bosch					1.2534HDVS						
1.9	Petrol	58	04/80-09/81	**1X**								
Engine: All engines	Information: version Bosch					1.2534HDVS						
3.0 EFi	Petrol	114	03/86-09/88	**2552 63 088**								
Engine: All engines	Information:									9.6119 C10		
3.0 EFi Turbo	Petrol	150	01/86-08/88	**RB30ET**								
Engine: All engines	Information:									9.6119 C10		
VR 5.0i	Petrol	165	07/93-04/95	**5.0 PFI V8**								
Engine: All engines	Information: version Bosch						2.7512PHT	3.7573/31				
VR 5.0i Wagon	Petrol	165	07/93-04/95	**5.0 PFI V8**								
Engine: All engines	Information: version Bosch						2.7512PHT	3.7573/31				
VS 5.0i	Petrol	165	04/95-05/96	**5.0 V8 PFI**								
Engine: All engines	Information: version Bosch						2.7512PHT	3.7573/31				
VS-II 5.0i	Petrol	165	06/96-08/97	**5.0 V8 PFI**								
Engine: All engines	Information: version Bosch						2.7512PHT	3.7573/31				
COMMODORE_VL												
2.0i	Petrol	95	01/86-07/88	**2.0 PFI**								
Engine: All engines	Information:									9.6119 C10		

A10	CONDENSER	**A20**	CONTACT SET	**A40**	DISTRIBUTOR CAP	**A50**	ROTOR	**A70**	PICK-UP
C10	COIL	**C20**	IGNITION MODULE	**C30**	ELECTRONIC IGNITION KIT	**E01**	IGNITION CABLE SET		

The present application list is a brief version. For the detailed information about the possibility of installation on a specific vehicle, please refer to our web-catalogue http://catalogo.facet.eu/

Vehicle	alim.	kW	Date	Engine	FUNCTIONS ON THE VEHICLE							
					A10	A20	A40	A50	A70	C10 - C30	C20	E01
2.0i Wagon	Petrol	95	01/86-07/88	**2.0 PFI**								
Engine: All engines	Information:									9.6119 C10		
5.0i Group A SS	Petrol	122	02/87-07/88	**5.0 V8 EFI**								
Engine: All engines	Information: version Bosch						2.7512PHT	3.7573/31				
COMMODORE_VN												
5.0i	Petrol	165	08/88-09/91	**5.0 V8 EFI**								
Engine: All engines	Information: version Bosch						2.7512PHT	3.7573/31				
5.0i Group A SS	Petrol	215	08/88-09/91	**5.0 V8 EFI**								
Engine: All engines	Information: version Bosch						2.7512PHT	3.7573/31				
COMMODORE_VP												
5.0i	Petrol	165	10/91-07/93	**5.0 V8 EFI**								
Engine: All engines	Information: version Bosch						2.7512PHT	3.7573/31				
DROVER												
QB 1.3	Petrol	47	02/85-12/87	**G13A**								
Engine: All engines	Information: version Denso						2.7593	3.7630				
Engine: All engines	Information:											4.7020
FORMULA_VR (8VK19)												
5.0i	Petrol	165	07/93-04/95	**5.0 PFI V8**								
Engine: All engines	Information: version Bosch						2.7512PHT	3.7573/31				
FRONTERA_UT (8MB25)												
2.0i	Petrol	85	10/95-03/99	**X20SE**								
Engine: All engines	Information:									9.6173 C10		4.9947
GEMINI_RB (8RB69)												
1.5	Petrol	52	04/85-06/87	**4XC1**								
Engine: All engines	Information: version Denso						2.7592	3.7630				
JACKAROO_UBS												
2.2 4x4	Petrol	68	03/87-10/88	**4ZD1**								
Engine: All engines	Information: version Denso						2.7593	3.7614				
2.6i 4x4	Petrol	84	11/88-12/91	**4ZE1**								
Engine: All engines	Information: version Hitachi							3.7969				
NOVA_LF												
1.6i Hatchback	Petrol	76	08/91-03/93	**4AFE**								
Engine: All engines	Information: version Denso							3.7629				
1.6i Sedan	Petrol	76	08/91-03/93	**4AFE**								
Engine: All engines	Information: version Denso							3.7629				

A10	CONDENSER	**A20**	CONTACT SET	**A40**	DISTRIBUTOR CAP	**A50**	ROTOR	**A70**	PICK-UP
C10	COIL	**C20**	IGNITION MODULE	**C30**	ELECTRONIC IGNITION KIT	**E01**	IGNITION CABLE SET		

The present application list is a brief version. For the detailed information about the possibility of installation on a specific vehicle, please refer to our web-catalogue http://catalogo.facet.eu/

Vehicle	alim.	kW	Date	Engine	FUNCTIONS ON THE VEHICLE A10	A20	A40	A50	A70	C10 - C30	C20	E01
1.8i Hatchback	Petrol	86	08/91-03/93	7AFE								
Engine	Information				A10	A20	A40	A50	A70	C10 - C30	C20	E01
All engines	version Denso						2.7630/35	3.7629				
All engines										9.6099 C10		4.9209
1.8i Sedan	Petrol	86	08/91-03/93	7AFE								
Engine	Information				A10	A20	A40	A50	A70	C10 - C30	C20	E01
All engines	version Denso						2.7630/35	3.7629				
All engines										9.6099 C10		4.9209
NOVA_LG												
1.6i Hatchback	Petrol	76	09/94-09/96	4AFE								
Engine	Information				A10	A20	A40	A50	A70	C10 - C30	C20	E01
All engines	version Denso						2.7630/35	3.7629				
All engines										9.6099 C10		4.9209
1.6i Sedan	Petrol	76	09/94-09/96	4AFE								
Engine	Information				A10	A20	A40	A50	A70	C10 - C30	C20	E01
All engines	version Denso						2.7630/35	3.7629				
All engines										9.6099 C10		4.9209
1.8i Hatchback	Petrol	86	09/94-09/96	7AFE								
Engine	Information				A10	A20	A40	A50	A70	C10 - C30	C20	E01
All engines	version Denso						2.7630/35	3.7629				
All engines										9.6099 C10		4.9209
1.8i Sedan	Petrol	86	09/94-09/96	7AFE								
Engine	Information				A10	A20	A40	A50	A70	C10 - C30	C20	E01
All engines	version Denso						2.7630/35	3.7629				
All engines										9.6099 C10		4.9209
PIAZZA_YB												
2.0i Turbo	Petrol	110	04/86-12/87	2L H.C.								
Engine	Information				A10	A20	A40	A50	A70	C10 - C30	C20	E01
All engines	version Denso							3.7627				
RODEO_TF												
2.2	Petrol	69	03/91-08/93	4ZD1								
Engine	Information				A10	A20	A40	A50	A70	C10 - C30	C20	E01
All engines	version Denso						2.7630/24	3.7614				
2.6i	Petrol	88	08/88-03/96	4ZE1								
Engine	Information				A10	A20	A40	A50	A70	C10 - C30	C20	E01
All engines	version Hitachi						2.7960	3.7969				
2.6i 4x4	Petrol	88	08/88-03/96	4ZE1								
Engine	Information				A10	A20	A40	A50	A70	C10 - C30	C20	E01
All engines	version Hitachi						2.7960	3.7969				
SCURRY_NB												
1.0	Petrol	33	10/85-05/86	F10A								
Engine	Information				A10	A20	A40	A50	A70	C10 - C30	C20	E01
All engines	version Denso					1.3511HDV	2.7593	3.7630				
SHUTTLE_WFR												
2.0	Petrol	69	06/86-06/89	4ZC1								
Engine	Information				A10	A20	A40	A50	A70	C10 - C30	C20	E01
All engines	version Denso						2.7593					
All engines	->year 31/10/87, version Denso							3.7614				
All engines	01/11/87 ->, version Denso							3.7630				

A10	CONDENSER	**A20**	CONTACT SET	**A40**	DISTRIBUTOR CAP	**A50**	ROTOR	**A70**	PICK-UP
C10	COIL	**C20**	IGNITION MODULE	**C30**	ELECTRONIC IGNITION KIT	**E01**	IGNITION CABLE SET		

The present application list is a brief version. For the detailed information about the possibility of installation on a specific vehicle, please refer to our web-catalogue http://catalogo.facet.eu/

Vehicle	alim.	kW	Date	Engine	FUNCTIONS ON THE VEHICLE							
					A10	A20	A40	A50	A70	C10 - C30	C20	E01

STATESMAN_VQ

				ENGINE
5.0i	Petrol	165	03/90-11/93	5.0 V8 EFI

Engine	Information	A10	A20	A40	A50	A70	C10 - C30	C20	E01
All engines	version Bosch			2.7512PHT	3.7573/31				

STATESMAN_VR

				ENGINE
5.0i	Petrol	165	12/93-04/95	5.0 PFI V8

Engine	Information	A10	A20	A40	A50	A70	C10 - C30	C20	E01
All engines	version Bosch			2.7512PHT	3.7573/31				

STATESMAN_VS

				ENGINE
5.0i	Petrol	165	03/95-08/96	5.0 V8 PFI

Engine	Information	A10	A20	A40	A50	A70	C10 - C30	C20	E01
All engines	version Bosch			2.7512PHT	3.7573/31				

STATESMAN_VS-II

				ENGINE
5.0i	Petrol	165	09/96-08/97	5.0 V8 PFI

Engine	Information	A10	A20	A40	A50	A70	C10 - C30	C20	E01
All engines	version Bosch			2.7512PHT	3.7573/31				

UTILITY_VG (8VK80)

				ENGINE
5.0i	Petrol	165	08/88-09/91	5.0 V8 EFI

Engine	Information	A10	A20	A40	A50	A70	C10 - C30	C20	E01
All engines	version Bosch			2.7512PHT	3.7573/31				

UTILITY_VP (8VK80)

				ENGINE
5.0i	Petrol	165	10/91-07/93	5.0 V8 EFI

Engine	Information	A10	A20	A40	A50	A70	C10 - C30	C20	E01
All engines	version Bosch			2.7512PHT	3.7573/31				

UTILITY_VR COUPÈ (8VK80)

				ENGINE
5.0i	Petrol	165	07/93-04/95	5.0 PFI V8

Engine	Information	A10	A20	A40	A50	A70	C10 - C30	C20	E01
All engines	version Bosch			2.7512PHT	3.7573/31				

A10	CONDENSER	**A20**	CONTACT SET	**A40**	DISTRIBUTOR CAP	**A50**	ROTOR	**A70**	PICK-UP
C10	COIL	**C20**	IGNITION MODULE	**C30**	ELECTRONIC IGNITION KIT	**E01**	IGNITION CABLE SET		

The present application list is a brief version. For the detailed information about the possibility of installation on a specific vehicle, please refer to our web-catalogue http://catalogo.facet.eu/

Vehicle	alim.	kW	Date	Engine	FUNCTIONS ON THE VEHICLE							
					A10	A20	A40	A50	A70	C10 - C30	C20	E01

ACCORD

				ENGINE
1.6	Petrol	79	10/98-12/01	D16B7

Engine	Information	A10	A20	A40	A50	A70	C10 - C30	C20	E01
All engines	->year 01/12/99, x 1, D.I.S.						9.6068 C10		

ACCORD III

				ENGINE
1.6 L	Petrol	65	11/85-12/89	A16A1

Engine	Information	A10	A20	A40	A50	A70	C10 - C30	C20	E01
All engines	version Hitachi			2.7922	3.7956				

				ENGINE
2.0	Petrol	101	01/86-12/86	A20A2

Engine	Information	A10	A20	A40	A50	A70	C10 - C30	C20	E01
All engines	version Hitachi			2.7922					
All engines	version Hitachi, no specific info conc. application available				3.7956				

				ENGINE
2.0 12V	Petrol	75	01/86-03/88	A20A1

Engine	Information	A10	A20	A40	A50	A70	C10 - C30	C20	E01
All engines	version Hitachi, no specific info conc. application available				3.7956				

				ENGINE
2.0 12V	Petrol	85	01/87-12/89	A20A3

Engine	Information	A10	A20	A40	A50	A70	C10 - C30	C20	E01
All engines	version Hitachi, no specific info conc. application available				3.7956				

				ENGINE
2.0 16V EXS	Petrol	101	01/88-12/89	B20A2

Engine	Information	A10	A20	A40	A50	A70	C10 - C30	C20	E01
All engines	version Hitachi			2.7922	3.7956				

				ENGINE
2.0 EX	Petrol	75	11/85-12/89	A20A1

Engine	Information	A10	A20	A40	A50	A70	C10 - C30	C20	E01
All engines	version Hitachi, no specific info conc. application available				3.7956				

				ENGINE
2.0 EX	Petrol	76	11/85-12/89	A20A1

Engine	Information	A10	A20	A40	A50	A70	C10 - C30	C20	E01
All engines	version Hitachi, no specific info conc. application available				3.7956				

				ENGINE
2.0 EX	Petrol	78	11/85-05/89	A20A2

Engine	Information	A10	A20	A40	A50	A70	C10 - C30	C20	E01
All engines	version Hitachi			2.7922					
All engines	version Hitachi, no specific info conc. application available				3.7956				

				ENGINE
2.0 EXi	Petrol	85	01/86-12/89	A20A3

Engine	Information	A10	A20	A40	A50	A70	C10 - C30	C20	E01
All engines	version Hitachi, no specific info conc. application available				3.7956				

				ENGINE
2.0 EXi	Petrol	90	11/85-12/87	A20A4

Engine	Information	A10	A20	A40	A50	A70	C10 - C30	C20	E01
All engines	version Hitachi, no specific info conc. application available				3.7956				

				ENGINE
2.0 i 16V	Petrol	101	01/87-12/87	B20A2

Engine	Information	A10	A20	A40	A50	A70	C10 - C30	C20	E01
All engines	version Hitachi			2.7922	3.7956				

				ENGINE
2.0 i 16V	Petrol	98	10/87-12/89	B20A8

Engine	Information	A10	A20	A40	A50	A70	C10 - C30	C20	E01
All engines	version Hitachi			2.7922	3.7956				

A10	CONDENSER	A20	CONTACT SET	A40	DISTRIBUTOR CAP	A50	ROTOR	A70	PICK-UP
C10	COIL	C20	IGNITION MODULE	C30	ELECTRONIC IGNITION KIT	E01	IGNITION CABLE SET		

The present application list is a brief version. For the detailed information about the possibility of installation on a specific vehicle, please refer to our web-catalogue http://catalogo.facet.eu/

Vehicle	alim.	kW	Date	Engine	FUNCTIONS ON THE VEHICLE A10	A20	A40	A50	A70	C10 - C30	C20	E01

ACCORD IV

				ENGINE
1.8	Petrol	77	01/90-12/91	--

Engine	Information	A10	A20	A40	A50	A70	C10 - C30		C20	E01
All engines	version Hitachi			2.7971	3.7981					
All engines							9.6116	C10		4.9711

				ENGINE
2.0 16V	Petrol	66	01/90-03/93	F20A6

Engine	Information	A10	A20	A40	A50	A70	C10 - C30		C20	E01
All engines	version Hitachi			2.7971	3.7981					
All engines							9.6116	C10		4.9711

				ENGINE
2.0 16V	Petrol	81	01/90-03/93	F20A2, F20A3

Engine	Information	A10	A20	A40	A50	A70	C10 - C30		C20	E01
All engines	version Hitachi			2.7971	3.7981					
All engines							9.6116	C10		4.9711

				ENGINE
2.0 16V	Petrol	98	01/90-12/93	F20A5

Engine	Information	A10	A20	A40	A50	A70	C10 - C30		C20	E01
All engines	version Hitachi			2.7968	3.7992					
All engines							9.6114	C10	9.4052	4.9711

				ENGINE
2.0 i 16V	Petrol	98	01/90-12/93	F20A4, F20A7, F20A8, F20Z3

Engine	Information	A10	A20	A40	A50	A70	C10 - C30		C20	E01
All engines	version Hitachi			2.7968						
Eng. F20A7, F20A8, F20Z3	version Hitachi				3.7992					
All engines							9.6114	C10	9.4052	4.9711

				ENGINE
2.2	Petrol	103	05/92-12/93	F22A6

Engine	Information	A10	A20	A40	A50	A70	C10 - C30		C20	E01
All engines	version Hitachi			2.7968	3.7992					
All engines							9.6114	C10	9.4052	4.9711

				ENGINE
2.2 i 16V	Petrol	108	01/91-12/93	F22A8

Engine	Information	A10	A20	A40	A50	A70	C10 - C30		C20	E01
All engines	version Hitachi			2.7968	3.7992					
All engines							9.6114	C10	9.4052	4.9711

				ENGINE
2.2 i 16V	Petrol	110	01/90-12/93	F22A3, F22A7

Engine	Information	A10	A20	A40	A50	A70	C10 - C30		C20	E01
All engines	version Hitachi			2.7968	3.7992					
All engines							9.6114	C10	9.4052	4.9711

				ENGINE
2.2 i 16V Automatik	Petrol	108	01/90-03/93	F22A3

Engine	Information	A10	A20	A40	A50	A70	C10 - C30		C20	E01
All engines	version Hitachi			2.7968	3.7992					
All engines							9.6114	C10	9.4052	4.9711

ACCORD V

				ENGINE
1.8 16V	Petrol	85	01/94-12/95	F18A3

Engine	Information	A10	A20	A40	A50	A70	C10 - C30		C20	E01
All engines	version Hitachi			2.7968	3.7995					
All engines							9.6114	C10		4.9711

				ENGINE
1.9 i	Petrol	85	02/96-10/98	F18A3

Engine	Information	A10	A20	A40	A50	A70	C10 - C30		C20	E01
All engines	version Hitachi			2.7982	3.7998					
All engines							9.6247	C10		4.9711

A10	CONDENSER	A20	CONTACT SET	A40	DISTRIBUTOR CAP	A50	ROTOR	A70	PICK-UP
C10	COIL	C20	IGNITION MODULE	C30	ELECTRONIC IGNITION KIT	E01	IGNITION CABLE SET		

The present application list is a brief version. For the detailed information about the possibility of installation on a specific vehicle, please refer to our web-catalogue http://catalogo.facet.eu/

Vehicle	alim.	kW	Date	Engine	FUNCTIONS ON THE VEHICLE A10	A20	A40	A50	A70	C10 - C30	C20	E01
2.0	Petrol	100	09/93-12/97	ENGINE F20B3								
Engine	Information	A10	A20	A40	A50	A70	C10 - C30		C20	E01
All engines	->year 31/12/96, version Hitachi			2.7968						
All engines	01/01/97 ->, version Hitachi			2.7976						
All engines	version Hitachi				3.7995					
All engines							9.6114	C10		4.9711
All engines	->year 31/12/96								9.4052	
2.0 i	Petrol	85	03/93-01/96	ENGINE F20Z2								
Engine	Information	A10	A20	A40	A50	A70	C10 - C30		C20	E01
All engines	version Hitachi			2.7968	3.7995					
All engines							9.6114	C10		4.9711
All engines	->eng. E100030								9.4052	
2.0 i LS	Petrol	96	02/96-10/98	ENGINE F20Z1								
Engine	Information	A10	A20	A40	A50	A70	C10 - C30		C20	E01
All engines	version Hitachi			2.7982	3.7998					
All engines							9.6247	C10		4.9711
2.0 i LS 16V	Petrol	100	09/93-02/98	ENGINE F20B3								
Engine	Information	A10	A20	A40	A50	A70	C10 - C30		C20	E01
All engines	->year 31/12/96, version Hitachi			2.7968						
All engines	01/01/97 ->, version Hitachi			2.7976						
All engines	version Hitachi				3.7995					
All engines							9.6114	C10		4.9711
All engines	->year 31/12/96								9.4052	
2.0 i S	Petrol	96	03/93-01/96	ENGINE F20Z1								
Engine	Information	A10	A20	A40	A50	A70	C10 - C30		C20	E01
All engines	version Hitachi			2.7968	3.7995					
All engines							9.6114	C10		4.9711
All engines	->eng. E100030								9.4052	
2.2	Petrol	103	04/96-12/97	ENGINE F22Z2								
Engine	Information	A10	A20	A40	A50	A70	C10 - C30		C20	E01
All engines	version Hitachi			2.7982	3.7998					
All engines							9.6247	C10		
2.2	Petrol	107	10/93-12/97	ENGINE F22B1								
Engine	Information	A10	A20	A40	A50	A70	C10 - C30		C20	E01
All engines	version Hitachi			2.7982	3.7998					
All engines							9.6247	C10		
2.2 16V	Petrol	96	01/96-09/98	ENGINE F22Z1								
Engine	Information	A10	A20	A40	A50	A70	C10 - C30		C20	E01
All engines	version Hitachi			2.7982	3.7998					
All engines							9.6247	C10		4.9711
2.2 i [USA]	Petrol	110	01/94-12/95	ENGINE --								
Engine	Information	A10	A20	A40	A50	A70	C10 - C30		C20	E01
All engines	version Hitachi, no specific info conc. application available			2.7976, 2.7982	3.7995, 3.7998					
All engines									9.4052	
All engines	no specific info conc. application available									4.9711
2.2 i 16V	Petrol	110	08/95-12/97	ENGINE F22B4								
Engine	Information	A10	A20	A40	A50	A70	C10 - C30		C20	E01
All engines	->year 31/12/96, version Hitachi			2.7968						
All engines	01/01/97 ->, version Hitachi			2.7976						
All engines	version Hitachi				3.7995					
All engines							9.6114	C10		4.9711
All engines	->year 31/12/96								9.4052	

A10	CONDENSER	A20	CONTACT SET	A40	DISTRIBUTOR CAP	A50	ROTOR	A70	PICK-UP
C10	COIL	C20	IGNITION MODULE	C30	ELECTRONIC IGNITION KIT	E01	IGNITION CABLE SET		

The present application list is a brief version. For the detailed information about the possibility of installation on a specific vehicle, please refer to our web-catalogue http://catalogo.facet.eu/

Vehicle	alim.	kW	Date	Engine	FUNCTIONS ON THE VEHICLE A10	A20	A40	A50	A70	C10 - C30	C20	E01
2.2 i ES	Petrol	110	09/93-02/98	ENGINE F22B5								
Engine	Information						2.7968					
All engines	->year 31/12/96, version Hitachi						2.7976					
All engines	01/01/97 ->, version Hitachi							3.7995				
All engines	version Hitachi									9.6114 C10		4.9711
All engines											9.4052	
All engines	->year 31/12/96											
2.2 i VTEC	Petrol	110	02/96-10/98	ENGINE F22Z2								
Engine	Information						2.7982	3.7998				
All engines	version Hitachi									9.6247 C10		
All engines												
2.3 i SR	Petrol	116	03/93-01/96	ENGINE H23A3								
Engine	Information						2.7968	3.7995				
All engines	version Hitachi									9.6114 C10		
All engines												
ACCORD VI												
1.6	Petrol	65	10/98-12/02	ENGINE A16A5								
Engine	Information						2.7922	3.7956				
All engines	version Hitachi											
1.6	Petrol	85	12/99-12/02	ENGINE D16B6								
Engine	Information									9.6068 C10		
All engines	->year 01/12/99, x 1, D.I.S.											
1.6 i	Petrol	85	10/98-12/02	ENGINE D16B6								
Engine	Information									9.6068 C10		
All engines	->year 01/12/99, x 1, D.I.S.											
1.6 LS	Petrol	79	10/98-12/02	ENGINE D16B7								
Engine	Information									9.6068 C10		
All engines	->year 01/12/99, x 1, D.I.S.											
1.8 16V Vtec	Petrol	100	04/99->	ENGINE 3B630WM, F18B3								
Engine	Information							3.7998				
All engines	version Hitachi									9.6247 C10		
All engines												
1.8 i	Petrol	100	10/98-12/02	ENGINE 3B630WM, F18B2, F18B4								
Engine	Information							3.7998				
Eng. 3B630WM	version Hitachi									9.6247 C10		
Eng. F18B2, F18B4	x 1, HITACHI, LUCAS, x 1, DISTRIBUTOR, HITACHI, LUCAS, DISTRIBUTOR											
1.8 i 16V Vtec	Petrol	100	11/98-12/99	ENGINE F18B4								
Engine	Information							3.7998				
All engines	version Hitachi									9.6247 C10		
All engines												
2.0	Petrol	107	11/99-10/02	ENGINE F20B7								
Engine	Information							3.7998				
All engines	version Hitachi									9.6247 C10		
All engines	x 1, DISTRIBUTOR											
2.0	Petrol	108	12/99-12/02	ENGINE F20B6								
Engine	Information							3.7998				
All engines	version Hitachi									9.6247 C10		
All engines	x 1, HITACHI, LUCAS, DISTRIBUTOR											

A10	CONDENSER	A20	CONTACT SET	A40	DISTRIBUTOR CAP	A50	ROTOR	A70	PICK-UP
C10	COIL	C20	IGNITION MODULE	C30	ELECTRONIC IGNITION KIT	E01	IGNITION CABLE SET		

The present application list is a brief version. For the detailed information about the possibility of installation on a specific vehicle, please refer to our web-catalogue http://catalogo.facet.eu/

Vehicle	alim.	kW	Date	Engine	FUNCTIONS ON THE VEHICLE							
					A10	A20	A40	A50	A70	C10 - C30	C20	E01
2.0 16V Vtec	Petrol	108	04/99->	**F20B6**								

Engine	Information	A10	A20	A40	A50	A70	C10 - C30		C20	E01
All engines	version Hitachi				3.7998					
All engines							9.6247	C10		

Vehicle	alim.	kW	Date	Engine
2.0 i	Petrol	108	10/98-01/01	**F20B6**

Engine	Information	A10	A20	A40	A50	A70	C10 - C30		C20	E01
All engines	version Hitachi				3.7998					
All engines	x 1, HITACHI, LUCAS, DISTRIBUTOR						9.6247	C10		

Vehicle	alim.	kW	Date	Engine
2.0 i 16V	Petrol	108	02/98-06/03	**F20B5, F20B7**

Engine	Information	A10	A20	A40	A50	A70	C10 - C30		C20	E01
All engines	version Hitachi				3.7998					
All engines	x 1, DISTRIBUTOR						9.6247	C10		

Vehicle	alim.	kW	Date	Engine
2.2 Type-R	Petrol	156	02/99-12/02	**H22A7**

Engine	Information	A10	A20	A40	A50	A70	C10 - C30		C20	E01
All engines	version Hitachi			2.7968	3.7995					
All engines	x 1, TEC, DISTRIBUTOR						9.6114	C10		

Vehicle	alim.	kW	Date	Engine
2.3	Petrol	113	11/00-06/03	**F23Z5**

Engine	Information	A10	A20	A40	A50	A70	C10 - C30		C20	E01
All engines	version Hitachi				3.7998					
All engines	x 1, HITACHI, LUCAS, DISTRIBUTOR						9.6247	C10		

Vehicle	alim.	kW	Date	Engine
2.3 i 16V Vtec	Petrol	113	11/00->	**F23Z5**

Engine	Information	A10	A20	A40	A50	A70	C10 - C30		C20	E01
All engines	version Hitachi				3.7998					
All engines							9.6247	C10		

Vehicle	alim.	kW	Date	Engine
2.3 VTi	Petrol	113	02/98-10/02	**F23A3**

Engine	Information	A10	A20	A40	A50	A70	C10 - C30		C20	E01
All engines	version Hitachi				3.7998					
All engines							9.6247	C10		

Vehicle	alim.	kW	Date	Engine
3.0 V6 24V	Petrol	147	02/98-06/03	**J30A1**

Engine	Information	A10	A20	A40	A50	A70	C10 - C30		C20	E01
All engines	01/01/01 ->, x 1, DISTRIBUTOR						9.6357	C10		

Vehicle	alim.	kW	Date	Engine
3.0 Vtec	Petrol	147	03/97-12/03	**J30A1**

Engine	Information	A10	A20	A40	A50	A70	C10 - C30		C20	E01
All engines	01/01/01 ->, Qty: 6						9.6357	C10		

Vehicle	alim.	kW	Date	Engine
3.0 Vtec	Petrol	152	10/01-06/03	**J30A2**

Engine	Information	A10	A20	A40	A50	A70	C10 - C30		C20	E01
All engines	Qty: 6						9.6357	C10		

ACCORD VIII

Vehicle	alim.	kW	Date	Engine
2.0 i	Petrol	115	06/08-06/15	**R20A3**

Engine	Information	A10	A20	A40	A50	A70	C10 - C30		C20	E01
All engines	x 4, COIL ON PLUG						9.6422	C10		

BALLADE

Vehicle	alim.	kW	Date	Engine
1.6i	Petrol	118	01/97-02/01	**B16A6**

Engine	Information	A10	A20	A40	A50	A70	C10 - C30		C20	E01
All engines	version Hitachi			2.7968	3.7995					
All engines							9.6114	C10		

A10	CONDENSER	**A20**	CONTACT SET	**A40**	DISTRIBUTOR CAP	**A50**	ROTOR	**A70**	PICK-UP
C10	COIL	**C20**	IGNITION MODULE	**C30**	ELECTRONIC IGNITION KIT	**E01**	IGNITION CABLE SET		

The present application list is a brief version. For the detailed information about the possibility of installation on a specific vehicle, please refer to our web-catalogue http://catalogo.facet.eu/

Vehicle	alim.	kW	Date	Engine	FUNCTIONS ON THE VEHICLE							
					A10	A20	A40	A50	A70	C10 - C30	C20	E01
1.6i	Petrol	89	01/96-02/01	D16Y9								
All engines	version Hitachi						2.7993	3.8002				
All engines												4.9702
1.8 i	Petrol	103	01/96-02/01	B18B4								
All engines	version Hitachi						2.7968	3.7995				
All engines										9.6114 C10		4.9709
CITY												
1.2	Petrol	58	05/03-09/05	L12A2								
All engines	Qty: 4									9.6429, 9.6508 C10		
1.3	Petrol	60	10/05-07/08	L13A3								
All engines	Qty: 4, version A									9.6429 C10		
All engines	Qty: 4, version B									9.6508 C10		
1.4 i-V TEC	Petrol	73	09/08->	L13Z1								
All engines	x 4, COIL ON PLUG									9.6503 C10		
1.5 i i-DSI	Petrol	66	11/02->	L15A2								
All engines	Qty: 4, version A									9.6429 C10		
All engines	Qty: 4, version B									9.6508 C10		
1.5 i-VTEC	Petrol	85	08/09->	L15-A7								
All engines	Qty: 4									9.6503 C10		
CIVIC III												
1.5 i Si [USA]	Petrol	0	01/84-12/87	--								
All engines	version Hitachi						2.7922	3.7956				
All engines										9.6112 C10		
CIVIC IV												
1.2	Petrol	41	01/88-12/91	D12B1								
All engines	version Hitachi						2.7971	3.7981				
All engines										9.6116 C10		
1.3	Petrol	55	10/87-12/89	D13B1								
All engines	version Hitachi						2.7971	3.7981				
All engines										9.6116 C10		
1.3 16V Cat	Petrol	55	09/89-09/91	D13B2								
All engines	version Hitachi						2.7971	3.7981				
All engines										9.6116 C10		
1.4 L	Petrol	66	10/87-12/89	D14A1								
All engines	version Hitachi						2.7971	3.7981				
All engines										9.6116 C10		

A10	CONDENSER	A20	CONTACT SET	A40	DISTRIBUTOR CAP	A50	ROTOR	A70	PICK-UP
C10	COIL	C20	IGNITION MODULE	C30	ELECTRONIC IGNITION KIT	E01	IGNITION CABLE SET		

The present application list is a brief version. For the detailed information about the possibility of installation on a specific vehicle, please refer to our web-catalogue http://catalogo.facet.eu/

Vehicle	alim.	kW	Date	Engine	FUNCTIONS ON THE VEHICLE A10	A20	A40	A50	A70	C10 - C30	C20	E01
1.4i 16V	Petrol	66	01/90-12/91	ENGINE D14A1								
Engine	Information	A10	A20	A40	A50	A70	C10 - C30		C20	E01
All engines	version Hitachi			2.7971	3.7981					
All engines							9.6116	C10		
1.5	Petrol	60	01/88-12/89	ENGINE D15B1								
Engine	Information	A10	A20	A40	A50	A70	C10 - C30		C20	E01
All engines	->eng. 4700494, version Hitachi				3.7982					
All engines							9.6115	C10	9.4052	
1.5 i 16V	Petrol	66	10/87-09/91	ENGINE D15B2								
Engine	Information	A10	A20	A40	A50	A70	C10 - C30		C20	E01
All engines	version Hitachi			2.7969						
All engines	->eng. 4700494, version Hitachi				3.7982					
All engines	->year 31/12/89						9.6113	C10		
All engines	01/01/90 ->						9.6115	C10		
All engines									9.4052	
1.5 i 16V	Petrol	69	10/87-09/91	ENGINE D15B2								
Engine	Information	A10	A20	A40	A50	A70	C10 - C30		C20	E01
All engines	version Hitachi			2.7969						
All engines	->eng. 4700494, version Hitachi				3.7982					
All engines	->year 31/12/89						9.6113	C10		
All engines	01/01/90 ->						9.6115	C10		
All engines									9.4052	
1.6 16V 4x4	Petrol	79	11/87-09/91	ENGINE D16A6								
Engine	Information	A10	A20	A40	A50	A70	C10 - C30		C20	E01
All engines	version Hitachi				3.7982					
All engines	->year 31/12/89						9.6113	C10		
All engines	01/01/90 ->						9.6116	C10		
All engines									9.4052	
1.6 i 16V	Petrol	80	10/87-09/91	ENGINE D16A6								
Engine	Information	A10	A20	A40	A50	A70	C10 - C30		C20	E01
All engines	->eng. 1600956, version Hitachi				3.7982					
All engines	->year 31/12/89						9.6113	C10		
All engines	01/01/90 ->						9.6116	C10		
All engines									9.4052	
1.6 i 16V	Petrol	81	10/87-09/91	ENGINE D16Z2								
Engine	Information	A10	A20	A40	A50	A70	C10 - C30		C20	E01
All engines	->eng. 1600956, version Hitachi				3.7982					
All engines							9.6115	C10	9.4052	
1.6 i 16V	Petrol	96	09/87-09/91	ENGINE D16A9								
Engine	Information	A10	A20	A40	A50	A70	C10 - C30		C20	E01
All engines	->eng. 1600956, version Hitachi				3.7982					
All engines							9.6113	C10	9.4052	
1.6 i 16V 4x4	Petrol	80	10/89-09/91	ENGINE D16A6								
Engine	Information	A10	A20	A40	A50	A70	C10 - C30		C20	E01
All engines	version Hitachi				3.7982					
All engines	->year 31/12/89						9.6113	C10		
All engines	01/01/90 ->						9.6116	C10		
All engines									9.4052	
1.6 i 16V 4x4	Petrol	81	01/89-12/91	ENGINE D16Z2								
Engine	Information	A10	A20	A40	A50	A70	C10 - C30		C20	E01
All engines	->eng. 1600956, version Hitachi				3.7982					
All engines							9.6115	C10	9.4052	

A10	CONDENSER	A20	CONTACT SET	A40	DISTRIBUTOR CAP	A50	ROTOR	A70	PICK-UP
C10	COIL	C20	IGNITION MODULE	C30	ELECTRONIC IGNITION KIT	E01	IGNITION CABLE SET		

The present application list is a brief version. For the detailed information about the possibility of installation on a specific vehicle, please refer to our web-catalogue http://catalogo.facet.eu/

Vehicle	alim.	kW	Date	Engine	FUNCTIONS ON THE VEHICLE: A10	A20	A40	A50	A70	C10 - C30	C20	E01
1.6i	Petrol	0	01/90-12/91	--								

Engine	Information	A10	A20	A40	A50	A70	C10 - C30	C20	E01
All engines	01/01/92 ->, version Hitachi			2.7968	3.7995				
All engines	->year 31/12/91, version Hitachi			2.7969	3.7997RS				
All engines	01/01/92 ->						9.6114 C10		
All engines	->year 31/12/91						9.6115 C10		
All engines								9.4052	

Vehicle	alim.	kW	Date	Engine
1.6i 16V	Petrol	118	01/88-12/91	D16A1

Engine	Information	A10	A20	A40	A50	A70	C10 - C30	C20	E01
All engines							9.6115 C10	9.4052	

Vehicle	alim.	kW	Date	Engine
1.6i 16V	Petrol	79	01/90-05/92	D16A7

Engine	Information	A10	A20	A40	A50	A70	C10 - C30	C20	E01
All engines	version Hitachi, no specific info conc. application available				3.7982				
All engines							9.6113 C10	9.4052	

Vehicle	alim.	kW	Date	Engine
1.6i 16V	Petrol	91	01/88-05/92	D16A8, D16A9

Engine	Information	A10	A20	A40	A50	A70	C10 - C30	C20	E01
All engines	->eng. 1600956, version Hitachi, no specific info conc. application available				3.7982				
All engines							9.6113 C10	9.4052	

Vehicle	alim.	kW	Date	Engine
1.6i 16V 4WD	Petrol	118	01/88-12/89	D16A1

Engine	Information	A10	A20	A40	A50	A70	C10 - C30	C20	E01
All engines	version Hitachi				3.7982				
All engines	->year 31/12/89						9.6113 C10		
All engines	01/01/90 ->						9.6116 C10		
All engines								9.4052	

Vehicle	alim.	kW	Date	Engine
1.6i 16V 4WD	Petrol	81	01/89-12/91	D16Z2

Engine	Information	A10	A20	A40	A50	A70	C10 - C30	C20	E01
All engines	version Hitachi				3.7982				
All engines	->year 31/12/89						9.6113 C10		
All engines	01/01/90 ->						9.6116 C10		
All engines								9.4052	

CIVIC IV SHUTTLE

Vehicle	alim.	kW	Date	Engine
1.4 i 16V	Petrol	66	01/88-12/92	D14A1

Engine	Information	A10	A20	A40	A50	A70	C10 - C30	C20	E01
All engines	version Hitachi			2.7971	3.7981				
All engines							9.6116 C10		

Vehicle	alim.	kW	Date	Engine
1.5 i 16V	Petrol	69	01/88-11/91	D15B2

Engine	Information	A10	A20	A40	A50	A70	C10 - C30	C20	E01
All engines	version Hitachi			2.7969					
All engines	->eng. 4708638, version Hitachi				3.7982				
All engines	->year 31/12/89						9.6113 C10		
All engines	01/01/90 ->						9.6115 C10		
All engines								9.4052	

Vehicle	alim.	kW	Date	Engine
1.6 4x4	Petrol	85	01/88-12/92	D16A, D16A7

Engine	Information	A10	A20	A40	A50	A70	C10 - C30	C20	E01
All engines	version Hitachi				3.7982				
All engines							9.6113 C10	9.4052	

Vehicle	alim.	kW	Date	Engine
1.6 i 16V 4WD	Petrol	80	01/88-12/89	D16A6

Engine	Information	A10	A20	A40	A50	A70	C10 - C30	C20	E01
All engines	version Hitachi				3.7982				
All engines	->year 31/12/89						9.6113 C10		
All engines	01/01/90 ->						9.6116 C10		

A10	CONDENSER	A20	CONTACT SET	A40	DISTRIBUTOR CAP	A50	ROTOR	A70	PICK-UP
C10	COIL	C20	IGNITION MODULE	C30	ELECTRONIC IGNITION KIT	E01	IGNITION CABLE SET		

The present application list is a brief version. For the detailed information about the possibility of installation on a specific vehicle, please refer to our web-catalogue http://catalogo.facet.eu/

Vehicle	alim.	kW	Date	Engine	FUNCTIONS ON THE VEHICLE A10	A20	A40	A50	A70	C10 - C30	C20	E01
1.6 i 16V 4WD	Petrol	80	01/88-12/89	**D16A6**								
All engines											9.4052	
1.6 i 16V 4WD	Petrol	81	01/88-02/95	**D16A6**								
All engines	version Hitachi							3.7982				
All engines	->year 31/12/89									9.6113 C10		
All engines	01/01/90 ->									9.6116 C10		
All engines											9.4052	
1.6i	Petrol	0	01/88-12/91	--								
All engines	version Hitachi						2.7969					
All engines	->year 31/12/89									9.6113 C10		
All engines	01/01/90 ->									9.6115 C10		
All engines											9.4052	
1.6i 16V 4WD	Petrol	81	01/88-12/92	**D16Z2**								
All engines	version Hitachi						2.7969	3.7982				
All engines										9.6115 C10	9.4052	
CIVIC IX												
1.4 i-VTEC	Petrol	73	02/12->	**L13Z4**								
All engines	x 4, COIL ON PLUG									9.6503 C10		
CIVIC V												
1.3	Petrol	55	01/92-12/92	**D13B2**								
All engines	version Hitachi						2.7971	3.7981				
All engines										9.6116 C10		
1.3 16V	Petrol	55	10/91-11/95	**D13B2**								
All engines	version Hitachi						2.7971	3.7981				
All engines										9.6116 C10		
1.5	Petrol	61	01/92-12/92	**D15B2**								
All engines	->eng. 4700494, version Hitachi							3.7982				
All engines										9.6115 C10	9.4052	
1.5	Petrol	69	08/93-12/95	**D15B7**								
All engines	version Hitachi						2.7968	3.7995				
All engines										9.6114 C10		
1.5 i 16V	Petrol	66	10/91-11/95	**D15B2**								
All engines	version Hitachi						2.7968	3.7995				
All engines										9.6114 C10		
All engines	->year 31/12/93										9.4052	
1.5 i 16V	Petrol	69	10/91-11/95	**D15B2, D15Z1**								
All engines	version Hitachi						2.7968	3.7995				
All engines										9.6114 C10		
All engines	->year 31/12/93										9.4052	

A10	CONDENSER	**A20**	CONTACT SET	**A40**	DISTRIBUTOR CAP	**A50**	ROTOR	**A70**	PICK-UP
C10	COIL	**C20**	IGNITION MODULE	**C30**	ELECTRONIC IGNITION KIT	**E01**	IGNITION CABLE SET		

The present application list is a brief version. For the detailed information about the possibility of installation on a specific vehicle, please refer to our web-catalogue http://catalogo.facet.eu/

Vehicle	alim.	kW	Date	Engine	FUNCTIONS ON THE VEHICLE A10	A20	A40	A50	A70	C10 - C30	C20	E01
1.5 i LSi	Petrol	74	08/93-11/95	D15B7								
Engine	Information	A10	A20	A40	A50	A70	C10 - C30		C20	E01		
All engines	version Hitachi			2.7968	3.7995							
All engines							9.6114	C10				
1.6 16V Vtec	Petrol	92	10/91-11/95	D16Z6, D16Z7								
Engine	Information	A10	A20	A40	A50	A70	C10 - C30		C20	E01		
All engines	version Hitachi			2.7968	3.7995							
All engines							9.6114	C10				
All engines	->year 31/12/93								9.4052			
1.6 4x4	Petrol	92	01/92-10/95	D16Z7								
Engine	Information	A10	A20	A40	A50	A70	C10 - C30		C20	E01		
All engines	version Hitachi			2.7968	3.7995							
All engines							9.6114	C10				
All engines	->year 31/12/93								9.4052			
1.6 EX	Petrol	88	08/93-10/95	D16A7								
Engine	Information	A10	A20	A40	A50	A70	C10 - C30		C20	E01		
All engines	version Hitachi			2.7968	3.7995							
All engines							9.6114	C10				
1.6 i	Petrol	77	01/94-11/95	D16Y7								
Engine	Information	A10	A20	A40	A50	A70	C10 - C30		C20	E01		
All engines	version Hitachi			2.7968	3.7995							
All engines							9.6114	C10		4.9702		
1.6 i Vtec	Petrol	118	01/94-11/95	B16A2								
Engine	Information	A10	A20	A40	A50	A70	C10 - C30		C20	E01		
All engines	version Hitachi			2.7968	3.7995							
All engines							9.6114	C10				
All engines	->eng. 1109264								9.4052			
1.6 i Vtec	Petrol	92	01/94-03/96	D16Y6, D16Z9								
Engine	Information	A10	A20	A40	A50	A70	C10 - C30		C20	E01		
Eng. D16Z9	version Hitachi			2.7968	3.7995							
Eng. D16Y6	version Hitachi			2.7982	3.7998							
Eng. D16Z9							9.6114	C10				
Eng. D16Y6							9.6247	C10		4.9702		
1.6 VTi	Petrol	118	10/91-11/95	B16A2								
Engine	Information	A10	A20	A40	A50	A70	C10 - C30		C20	E01		
All engines	version Hitachi			2.7968	3.7995							
All engines							9.6114	C10				
All engines	->eng. 1109264								9.4052			
1.6 VTi 16V	Petrol	118	10/91-11/95	B16A2								
Engine	Information	A10	A20	A40	A50	A70	C10 - C30		C20	E01		
All engines	version Hitachi			2.7968	3.7995							
All engines							9.6114	C10				
All engines	->eng. 1109264								9.4052			
CIVIC VI												
1.4	Petrol	55	11/95-10/98	D14A4								
Engine	Information	A10	A20	A40	A50	A70	C10 - C30		C20	E01		
All engines	version Hitachi			2.7993	3.8002							
All engines										4.9702		
1.4 16V	Petrol	55	01/97-02/01	D14A7, D14Z3								
Engine	Information	A10	A20	A40	A50	A70	C10 - C30		C20	E01		
Eng. D14A7	version Hitachi			2.8106	3.8002							

A10	CONDENSER	A20	CONTACT SET	A40	DISTRIBUTOR CAP	A50	ROTOR	A70	PICK-UP
C10	COIL	C20	IGNITION MODULE	C30	ELECTRONIC IGNITION KIT	E01	IGNITION CABLE SET		

The present application list is a brief version. For the detailed information about the possibility of installation on a specific vehicle, please refer to our web-catalogue http://catalogo.facet.eu/

Vehicle	alim.	kW	Date	Engine	FUNCTIONS ON THE VEHICLE A10	A20	A40	A50	A70	C10 - C30	C20	E01
1.4 16V	Petrol	55	01/97-02/01	ENGINE D14A7, D14Z3								

Engine	Information	A10	A20	A40	A50	A70	C10 - C30		C20	E01
All engines	x 1, HITACHI, DISTRIBUTOR						9.6247	C10		
Eng. D14A7										4.9686

1.4 16V	Petrol	66	04/98-02/01	ENGINE D14A8

Engine	Information	A10	A20	A40	A50	A70	C10 - C30		C20	E01
All engines	version Hitachi			2.8106	3.8002					
All engines										4.9686

1.4 i	Petrol	55	09/95-02/01	ENGINE D14A3, D14A5, D14A7, D14Z1, D14Z3

Engine	Information	A10	A20	A40	A50	A70	C10 - C30		C20	E01
Eng. D14A5	->year 31/12/95, version Hitachi			2.7968	3.7995					
Eng. D14A5	01/01/96 ->, version Hitachi			2.7982	3.7998					
Eng. D14A3, D14Z1	version Hitachi			2.7993	3.8002					
Eng. D14A3, D14Z1	x 1, TEC, DISTRIBUTOR						9.6114	C10		
All engines	x 1, HITACHI, DISTRIBUTOR						9.6247	C10		
Eng. D14A3, D14Z1										4.9702

1.4 i	Petrol	66	06/95-02/01	ENGINE D14A2, D14A4, D14A8, D14Z2, D14Z4

Engine	Information	A10	A20	A40	A50	A70	C10 - C30		C20	E01
Eng. D14A2, D14Z2	->year 31/12/95, version Hitachi			2.7968	3.7995					
Eng. D14A2	01/01/96 ->, version Hitachi			2.7982	3.7998					
Eng. D14A4	version Hitachi			2.7993						
Eng. D14A8	version Hitachi			2.8106						
Eng. D14A4, D14A8	version Hitachi				3.8002					
Eng. D14A2, D14Z2, D14Z4	x 1, TEC, DISTRIBUTOR						9.6114	C10		
Eng. D14Z2							9.6114	C10		
Eng. D14Z4	x 1, HITACHI, DISTRIBUTOR						9.6247	C10		
Eng. D14A8										4.9686
Eng. D14A4, D14Z2										4.9702

1.4 i S	Petrol	66	11/95-02/01	ENGINE D14A2, D14A4, D14Z2, D14Z4

Engine	Information	A10	A20	A40	A50	A70	C10 - C30		C20	E01
Eng. D14Z2	version Hitachi			2.7968	3.7995					
Eng. D14A4	version Hitachi			2.7993	3.8002					
Eng. D14A2, D14Z2, D14Z4	x 1, TEC, DISTRIBUTOR						9.6114	C10		
Eng. D14Z4	x 1, HITACHI, DISTRIBUTOR						9.6247	C10		
Eng. D14A4, D14Z2										4.9702

1.4 LPG	Petrol/ Liquified Petro-leum Gas (LPG)	66	01/97-02/01	ENGINE D14A4, D14Z4

Engine	Information	A10	A20	A40	A50	A70	C10 - C30		C20	E01
All engines	x 1, HITACHI, DISTRIBUTOR						9.6247	C10		

1.4i	Petrol	66	01/99->	ENGINE D14A6

Engine	Information	A10	A20	A40	A50	A70	C10 - C30		C20	E01
All engines	version Hitachi			2.8106	3.8002					
All engines										4.9686

1.4i 16V	Petrol	55	11/98-03/01	ENGINE D14Z1, D14Z3

Engine	Information	A10	A20	A40	A50	A70	C10 - C30		C20	E01
Eng. D14Z1	version Hitachi			2.7968	3.7995					
Eng. D14Z3	version Hitachi			2.7982	3.7998					
Eng. D14Z1							9.6114	C10		4.9702
Eng. D14Z3							9.6247	C10		4.9686

A10	CONDENSER	A20	CONTACT SET	A40	DISTRIBUTOR CAP	A50	ROTOR	A70	PICK-UP
C10	COIL	C20	IGNITION MODULE	C30	ELECTRONIC IGNITION KIT	E01	IGNITION CABLE SET		

The present application list is a brief version. For the detailed information about the possibility of installation on a specific vehicle, please refer to our web-catalogue http://catalogo.facet.eu/

Vehicle	alim.	kW	Date	Engine	FUNCTIONS ON THE VEHICLE							
					A10	A20	A40	A50	A70	C10 - C30	C20	E01
1.4i 16V	Petrol	66	11/98-10/00	ENGINE D14Z4								
Engine	Information											
All engines	version Hitachi						2.7982	3.7998				
All engines										9.6247 C10		4.9686
1.4i 16V Vtec	Petrol	66	01/99->	ENGINE D14Z4								
Engine	Information											
All engines	version Hitachi						2.7982	3.7998				
All engines										9.6247 C10		4.9686
1.5	Petrol	66	11/95-12/96	ENGINE D15Z3								
Engine	Information											
All engines	x 1, TEC, DISTRIBUTOR									9.6114 C10		
1.5 16V	Petrol	84	01/97-02/01	ENGINE D15Z6, D15Z8								
Engine	Information											
Eng. D15Z8	version Hitachi						2.7982	3.7998				
All engines	x 1, TEC, DISTRIBUTOR									9.6114 C10		
Eng. D15Z8	x 1, HITACHI, x 1, DISTRIBUTOR, HITACHI, DISTRIBUTOR									9.6247 C10		
Eng. D15Z8												4.9686
1.5 i	Petrol	84	11/95-02/01	ENGINE D15Z6, D15Z8								
Engine	Information											
Eng. D15Z6	version Hitachi						2.7968	3.7995				
All engines	x 1, TEC, x 1, DISTRIBUTOR, TEC, DISTRIBUTOR									9.6114 C10		
Eng. D15Z8	x 1, HITACHI, DISTRIBUTOR									9.6247 C10		
Eng. D15Z6												4.9702
1.5 i Vtec-E	Petrol	66	09/94-01/97	ENGINE D15Z3								
Engine	Information											
All engines	version Hitachi						2.7968	3.7995				
All engines	x 1, TEC, DISTRIBUTOR									9.6114 C10		
1.6	Petrol	79	10/95-12/00	ENGINE --, D16Y2								
Engine	Information											
Eng. --	version Hitachi						2.7968	3.7995				
Eng. --										9.6114 C10		4.9702
Eng. D16Y2	x 1, TEC, DISTRIBUTOR									9.6114 C10		
Eng. D16Y2	x 1, HITACHI, DISTRIBUTOR									9.6247 C10		
1.6	Petrol	92	11/98-03/01	ENGINE D16W4								
Engine	Information											
All engines	version Hitachi						2.7982	3.7998				
All engines	x 1, HITACHI, DISTRIBUTOR									9.6247 C10		
All engines												4.9686
1.6	Petrol	93	10/95-03/01	ENGINE D16Y2								
Engine	Information											
All engines	x 1, TEC, DISTRIBUTOR									9.6114 C10		
1.6 16V	Petrol	85	01/97-02/01	ENGINE D16B2, D16W3								
Engine	Information											
Eng. D16B2	version Hitachi						2.8106	3.8002				
All engines	x 1, TEC, DISTRIBUTOR									9.6114 C10		
All engines	x 1, HITACHI, DISTRIBUTOR									9.6247 C10		
Eng. D16B2												4.9686
1.6 16V	Petrol	92	04/98-02/01	ENGINE D16W4								
Engine	Information											
All engines	x 1, HITACHI, DISTRIBUTOR									9.6247 C10		

A10	CONDENSER	A20	CONTACT SET	A40	DISTRIBUTOR CAP	A50	ROTOR	A70	PICK-UP
C10	COIL	C20	IGNITION MODULE	C30	ELECTRONIC IGNITION KIT	E01	IGNITION CABLE SET		

The present application list is a brief version. For the detailed information about the possibility of installation on a specific vehicle, please refer to our web-catalogue http://catalogo.facet.eu/

Vehicle	alim.	kW	Date	Engine	FUNCTIONS ON THE VEHICLE A10	A20	A40	A50	A70	C10 - C30	C20	E01
1.6 i	Petrol	77	03/96-03/00	**D16Y7**								
All engines	version Hitachi						2.7968	3.7995				
All engines	x 1, TEC, DISTRIBUTOR									9.6114 C10		
All engines												4.9702
1.6 i	Petrol	83	09/94-01/97	**D16Y3**								
All engines	->year 31/12/95, version Hitachi						2.7968	3.7995				
All engines	01/01/96 ->, version Hitachi						2.7982	3.7998				
All engines	x 1, TEC, DISTRIBUTOR									9.6114 C10		
1.6 i	Petrol	84	11/95-02/01	**D16Y5**								
All engines	version Hitachi						2.7982	3.7998				
All engines	x 1, HITACHI, DISTRIBUTOR									9.6247 C10		
All engines												4.9702
1.6 i Vtec	Petrol	118	04/99-12/00	**B16A2**								
All engines	version Hitachi						2.7968	3.7995				
All engines	x 1, TEC, DISTRIBUTOR									9.6114 C10		
1.6 i Vtec	Petrol	92	11/95-02/01	**D16Y6, D16Y8**								
Eng. D16Y8	version Hitachi						2.7968	3.7995				
Eng. D16Y6	version Hitachi						2.7982	3.7998				
Eng. D16Y8	x 1, TEC, DISTRIBUTOR									9.6114 C10		
Eng. D16Y6										9.6247 C10		
All engines												4.9702
1.6 i Vtec	Petrol	93	09/94-01/97	**D16Y2**								
All engines	version Hitachi						2.7968	3.7995				
All engines										9.6114 C10		
1.6 VTi	Petrol	118	11/95-02/01	**B16A2**								
All engines	version Hitachi						2.7968	3.7995				
All engines	x 1, TEC, DISTRIBUTOR									9.6114 C10		
All engines	->year 31/12/98											4.9702
1.6i 16V	Petrol	77	01/96->	**D16Y7**								
All engines	version Hitachi						2.7968	3.7995				
All engines										9.6114 C10		4.9702
1.6i 16V	Petrol	85	11/98-12/00	**D16W3**								
All engines	version Hitachi						2.7982	3.7998				
All engines										9.6247 C10		4.9686
1.6i 16V Vtec	Petrol	92	01/96-09/99	**D16Y8**								
All engines	version Hitachi						2.7968	3.7995				
All engines										9.6114 C10		4.9702
1.8 16V	Petrol	124	01/97-02/01	**B18C4**								
All engines	x 1, TEC, DISTRIBUTOR									9.6114 C10		
All engines	x 1, HITACHI, DISTRIBUTOR									9.6247 C10		

A10	CONDENSER	**A20**	CONTACT SET	**A40**	DISTRIBUTOR CAP	**A50**	ROTOR	**A70**	PICK-UP
C10	COIL	**C20**	IGNITION MODULE	**C30**	ELECTRONIC IGNITION KIT	**E01**	IGNITION CABLE SET		

The present application list is a brief version. For the detailed information about the possibility of installation on a specific vehicle, please refer to our web-catalogue http://catalogo.facet.eu/

Vehicle	alim.	kW	Date	Engine	FUNCTIONS ON THE VEHICLE A10	A20	A40	A50	A70	C10 - C30	C20	E01
1.8 i 16V VTi Vtec	Petrol	124	01/97-12/98	**D18C4**								

Engine	Information	A10	A20	A40	A50	A70	C10 - C30	C20	E01
All engines							9.6114 C10		

CIVIC VII

1.3 IMA	Petrol/ Electric	61	10/03-09/05	**LDA1**

Engine	Information	A10	A20	A40	A50	A70	C10 - C30	C20	E01
All engines	FP: Front, x 4, COIL ON PLUG						9.6429 C10		
All engines	FP: Rear, x 4, COIL ON PLUG						9.6508 C10		

1.4	Petrol	66	12/00-09/05	**D14Z5**

Engine	Information	A10	A20	A40	A50	A70	C10 - C30	C20	E01
All engines	x 4, COIL ON PLUG						9.6357 C10		

1.4 i	Petrol	55	02/01-09/05	**D14Z6**

Engine	Information	A10	A20	A40	A50	A70	C10 - C30	C20	E01
All engines	x 4, COIL ON PLUG						9.6357 C10		

1.4 iS	Petrol	66	02/01-09/05	**D14Z5, D14Z6**

Engine	Information	A10	A20	A40	A50	A70	C10 - C30	C20	E01
Eng. D14Z5	Qty: 4						9.6357 C10		
Eng. D14Z6	x 4, COIL ON PLUG						9.6357 C10		

1.4i 16V	Petrol	66	02/01->	**D14Z6**

Engine	Information	A10	A20	A40	A50	A70	C10 - C30	C20	E01
All engines	Qty: 4						9.6357 C10		

1.5	Petrol	82	02/03-09/05	**D15Y3**

Engine	Information	A10	A20	A40	A50	A70	C10 - C30	C20	E01
All engines	x 4, COIL ON PLUG						9.6357 C10		

1.5 i 16V	Petrol	0	01/01->	**D15Y2, D15Y3**

Engine	Information	A10	A20	A40	A50	A70	C10 - C30	C20	E01
All engines	Qty: 4						9.6357 C10		

1.6	Petrol	81	02/01-09/05	**D16V1, D16W7**

Engine	Information	A10	A20	A40	A50	A70	C10 - C30	C20	E01
Eng. D16V1	Qty: 4						9.6357 C10		
Eng. D16W7	x 4, COIL ON PLUG						9.6357 C10		

1.6 i	Petrol	81	02/01-12/05	**D16V1, D16W7**

Engine	Information	A10	A20	A40	A50	A70	C10 - C30	C20	E01
All engines	x 4, COIL ON PLUG						9.6357 C10		
Eng. D16V1	Qty: 4						9.6357 C10		

1.6i 16V	Petrol	81	04/01->	**D16W7**

Engine	Information	A10	A20	A40	A50	A70	C10 - C30	C20	E01
All engines	Qty: 4						9.6357 C10		

1.6i 16V Vtec	Petrol	81	04/01->	**D16V3**

Engine	Information	A10	A20	A40	A50	A70	C10 - C30	C20	E01
All engines	Qty: 4						9.6357 C10		

1.7	Petrol	85	02/01-09/05	**D17A6**

Engine	Information	A10	A20	A40	A50	A70	C10 - C30	C20	E01
All engines	Qty: 4						9.6357 C10		

A10	CONDENSER	**A20**	CONTACT SET	**A40**	DISTRIBUTOR CAP	**A50**	ROTOR	**A70**	PICK-UP
C10	COIL	**C20**	IGNITION MODULE	**C30**	ELECTRONIC IGNITION KIT	**E01**	IGNITION CABLE SET		

The present application list is a brief version. For the detailed information about the possibility of installation on a specific vehicle, please refer to our web-catalogue http://catalogo.facet.eu/

Vehicle	alim.	kW	Date	Engine	FUNCTIONS ON THE VEHICLE A10	A20	A40	A50	A70	C10 - C30	C20	E01
1.7	Petrol	92	01/00-08/05	ENGINE D17A6								
Engine: All engines — Information: Qty: 4										9.6357 C10		
1.7 i	Petrol	88	05/01-12/05	ENGINE D17A8								
Engine: All engines — Information: x 4, COIL ON PLUG										9.6357 C10		
1.7 i 16V VTi	Petrol	0	11/01->	ENGINE D17Z4								
Engine: All engines — Information: Qty: 4										9.6357 C10		
1.7 i 16V VTi	Petrol	92	02/01->	ENGINE D17A5								
Engine: All engines — Information: Qty: 4										9.6357 C10		
1.7 i VTEC	Petrol	92	05/01-12/05	ENGINE D17A5, D17A9								
Engine: All engines — Information: x 4, COIL ON PLUG										9.6357 C10		
CIVIC VIII												
1.3 IMA	Petrol/ Electric	70	01/06->	ENGINE LDA2								
Engine: All engines — Information: FP: Front, x 4, COIL ON PLUG										9.6429 C10		
Engine: All engines — Information: FP: Rear, x 4, COIL ON PLUG										9.6508 C10		
1.3 IMA	Petrol/ Electric	85	01/10-02/12	ENGINE LDA2								
Engine: All engines — Information: FP: Front, x 4, COIL ON PLUG										9.6429 C10		
Engine: All engines — Information: FP: Rear, x 4, COIL ON PLUG										9.6508 C10		
1.4	Petrol	61	09/05->	ENGINE L13A7								
Engine: All engines — Information: FP: Front, x 4, COIL ON PLUG										9.6429 C10		
Engine: All engines — Information: FP: Rear, x 4, COIL ON PLUG										9.6508 C10		
1.4	Petrol	73	10/08->	ENGINE L13Z1								
Engine: All engines — Information: x 4, COIL ON PLUG										9.6503 C10		
1.6	Petrol	84	09/05->	ENGINE R16A1, R16A2								
Engine: Eng. R16A1 — Information: Qty: 4										9.6422 C10		
Engine: Eng. R16A2 — Information: x 4, COIL ON PLUG										9.6422 C10		
1.6	Petrol	92	09/05->	ENGINE R16A1								
Engine: All engines — Information: x 4, COIL ON PLUG										9.6422 C10		
1.8	Petrol	103	09/05->	ENGINE R18A1, R18A2								
Engine: All engines — Information: x 4, COIL ON PLUG										9.6422 C10		
Engine: Eng. R18A2 — Information: Qty: 4										9.6422 C10		
1.8 EXS Flex	Petrol/ Ethanol	103	11/06->	ENGINE R18A1								
Engine: All engines — Information: x 4, COIL ON PLUG										9.6422 C10		

A10	CONDENSER	A20	CONTACT SET	A40	DISTRIBUTOR CAP	A50	ROTOR	A70	PICK-UP
C10	COIL	C20	IGNITION MODULE	C30	ELECTRONIC IGNITION KIT	E01	IGNITION CABLE SET		

The present application list is a brief version. For the detailed information about the possibility of installation on a specific vehicle, please refer to our web-catalogue http://catalogo.facet.eu/

Vehicle	alim.	kW	Date	Engine	FUNCTIONS ON THE VEHICLE: A10	A20	A40	A50	A70	C10 - C30	C20	E01

CONCERTO

				ENGINE
1.4	Petrol	61	10/89-10/92	D14A1

Engine	Information	A10	A20	A40	A50	A70	C10 - C30		C20	E01
All engines	version Hitachi			2.7971	3.7981					
All engines							9.6116	C10		

				ENGINE
1.4	Petrol	66	08/89-10/91	D14A1

Engine	Information	A10	A20	A40	A50	A70	C10 - C30		C20	E01
All engines	version Hitachi			2.7971	3.7981					
All engines							9.6116	C10		

				ENGINE
1.5 i	Petrol	0	01/90-12/91	--

Engine	Information	A10	A20	A40	A50	A70	C10 - C30		C20	E01
All engines	version Hitachi			2.7969	3.7982					
All engines							9.6115	C10		

				ENGINE
1.5 i 16V	Petrol	66	08/89-05/95	D15B2

Engine	Information	A10	A20	A40	A50	A70	C10 - C30		C20	E01
All engines							9.6115	C10	9.4052	

				ENGINE
1.6 16V	Petrol	78	08/89-03/95	D16Z2

Engine	Information	A10	A20	A40	A50	A70	C10 - C30		C20	E01
All engines							9.6113	C10	9.4052	

				ENGINE
1.6 i 16V	Petrol	82	08/89-03/95	D16Z2

Engine	Information	A10	A20	A40	A50	A70	C10 - C30		C20	E01
All engines							9.6113	C10	9.4052	

				ENGINE
1.6 i 16V	Petrol	90	08/89-03/95	D16A8

Engine	Information	A10	A20	A40	A50	A70	C10 - C30		C20	E01
All engines							9.6113	C10	9.4052	

				ENGINE
1.6i	Petrol	88	01/90-12/91	D16A

Engine	Information	A10	A20	A40	A50	A70	C10 - C30		C20	E01
All engines	version Hitachi			2.7971	3.7981					
All engines							9.6116	C10		

				ENGINE
1.6i DOHC	Petrol	0	01/90-12/91	--

Engine	Information	A10	A20	A40	A50	A70	C10 - C30		C20	E01
All engines	version Hitachi			2.7969	3.7982					
All engines							9.6113	C10	9.4052	

				ENGINE
1.6i SOHC	Petrol	0	01/90-12/91	--

Engine	Information	A10	A20	A40	A50	A70	C10 - C30		C20	E01
All engines	version Hitachi			2.7969	3.7982					
All engines							9.6113	C10		

CR-V I

				ENGINE
2.0	Petrol	98	04/99-02/02	B20Z1

Engine	Information	A10	A20	A40	A50	A70	C10 - C30		C20	E01
All engines	version Hitachi			2.7968	3.7995					
All engines							9.6114	C10		4.9709

				ENGINE
2.0 16V 4WD	Petrol	108	01/99-02/02	B20Z1, B20Z3

Engine	Information	A10	A20	A40	A50	A70	C10 - C30		C20	E01
Eng. B20Z1	version Hitachi			2.7968	3.7995					
All engines	x 1, TEC, DISTRIBUTOR						9.6114	C10		
Eng. B20Z1										4.9709

A10	CONDENSER	A20	CONTACT SET	A40	DISTRIBUTOR CAP	A50	ROTOR	A70	PICK-UP
C10	COIL	C20	IGNITION MODULE	C30	ELECTRONIC IGNITION KIT	E01	IGNITION CABLE SET		

The present application list is a brief version. For the detailed information about the possibility of installation on a specific vehicle, please refer to our web-catalogue http://catalogo.facet.eu/

Vehicle	alim.	kW	Date	Engine	FUNCTIONS ON THE VEHICLE A10	A20	A40	A50	A70	C10 - C30	C20	E01
2.0 16V 4WD	Petrol	94	10/95-12/01	**B20B, B20B3, B20B9**								
Eng. B20B	version Hitachi						2.7968	3.7995				
Eng. B20B										9.6114 C10		4.9709
Eng. B20B3, B20B9	x 1, TEC, DISTRIBUTOR									9.6114 C10		
2.0 i 16V	Petrol	108	02/97-02/02	**B20B3, B20Z3**								
All engines	version Hitachi						2.7968	3.7995				
All engines										9.6114 C10		4.9709
2.0 i 16V	Petrol	94	02/98-04/99	**B20B4**								
All engines	version Hitachi						2.7968	3.7995				
All engines										9.6114 C10		4.9709
2.0 i 16V	Petrol	98	04/99-02/02	**B20B9**								
All engines	version Hitachi						2.7968	3.7995				
All engines										9.6114 C10		4.9709
CR-V II												
2.0	Petrol	110	06/04->	**R20A1**								
All engines	Qty: 4									9.6422 C10		
CR-V III												
2.0 i	Petrol	110	01/07->	**R20A2**								
All engines	Qty: 4									9.6422 C10		
2.0 i-VTEC	Petrol	110	01/07-06/12	**R20A2**								
All engines	x 4, COIL ON PLUG									9.6422 C10		
2.0 i-VTEC 4WD	Petrol	110	10/06-06/12	**R20A2**								
All engines	x 4, COIL ON PLUG									9.6422 C10		
CR-V IV												
2.0	Petrol	110	01/12->	**R20A9**								
All engines	->year 01/12/12, x 4, COIL ON PLUG									9.6422 C10		
CRX II												
1.6 i 16V	Petrol	91	10/87-02/92	**D16Z5**								
All engines	->eng. 1401684, version Hitachi							3.7982				
All engines										9.6113 C10	9.4052	
1.6 i 16V	Petrol	96	10/87-12/89	**D16A9**								
All engines	->eng. 1401684, version Hitachi							3.7982				
All engines										9.6113 C10	9.4052	
1.6 i 16V Vtec	Petrol	110	10/89-02/92	**B16A1**								
All engines										9.6115 C10	9.4052	

A10	CONDENSER	**A20**	CONTACT SET	**A40**	DISTRIBUTOR CAP	**A50**	ROTOR	**A70**	PICK-UP
C10	COIL	**C20**	IGNITION MODULE	**C30**	ELECTRONIC IGNITION KIT	**E01**	IGNITION CABLE SET		

The present application list is a brief version. For the detailed information about the possibility of installation on a specific vehicle, please refer to our web-catalogue http://catalogo.facet.eu/

Vehicle	alim.	kW	Date	Engine	FUNCTIONS ON THE VEHICLE							
					A10	A20	A40	A50	A70	C10 - C30	C20	E01

CRX III

				ENGINE
1.6 ESi	Petrol	92	03/92-12/98	D16Y8, D16Z6

Engine	Information	A10	A20	A40	A50	A70	C10 - C30		C20	E01
All engines	version Hitachi			2.7968	3.7995					
All engines							9.6114	C10		
All engines	->year 31/12/93								9.4052	

				ENGINE
1.6 i VTi	Petrol	118	03/92-12/98	B16A2

Engine	Information	A10	A20	A40	A50	A70	C10 - C30		C20	E01
All engines	version Hitachi			2.7968	3.7995					
All engines							9.6114	C10		
All engines	->eng. 1109264								9.4052	

CR-Z

				ENGINE
1.5 IMA	Petrol/ Electric	84	06/10->	LEA1

Engine	Information	A10	A20	A40	A50	A70	C10 - C30		C20	E01
All engines	x 4, COIL ON PLUG						9.6503	C10		

				ENGINE
1.5 IMA	Petrol/ Electric	89	11/12->	LEA3

Engine	Information	A10	A20	A40	A50	A70	C10 - C30		C20	E01
All engines	x 4, COIL ON PLUG						9.6503	C10		

FR-V

				ENGINE
1.7	Petrol	92	08/04->	D17A2

Engine	Information	A10	A20	A40	A50	A70	C10 - C30		C20	E01
All engines	x 4, COIL ON PLUG						9.6357	C10		

				ENGINE
1.8	Petrol	103	01/07->	R18A1

Engine	Information	A10	A20	A40	A50	A70	C10 - C30		C20	E01
All engines	x 4, COIL ON PLUG						9.6422	C10		

HR-V

				ENGINE
1.6 16V	Petrol	77	03/99->	350Y, D16W1

Engine	Information	A10	A20	A40	A50	A70	C10 - C30		C20	E01
Eng. 350Y	version Hitachi			2.7968	3.7995					
Eng. D16W1	x 1, TEC, DISTRIBUTOR						9.6114	C10		
Eng. 350Y										4.9699

				ENGINE
1.6 16V 4WD	Petrol	77	03/99->	350Y, D16W1

Engine	Information	A10	A20	A40	A50	A70	C10 - C30		C20	E01
Eng. 350Y	version Hitachi			2.7968	3.7995					
Eng. D16W1	x 1, TEC, DISTRIBUTOR						9.6114	C10		
Eng. 350Y										4.9699

				ENGINE
1.6 16V 4WD	Petrol	91	10/99-09/05	D16W5

Engine	Information	A10	A20	A40	A50	A70	C10 - C30		C20	E01
All engines	version Hitachi			2.7968	3.7995					
All engines	x 1, TEC, DISTRIBUTOR						9.6114	C10		
All engines										4.9699

				ENGINE
1.6i 16V	Petrol	77	04/99->	D16W2

Engine	Information	A10	A20	A40	A50	A70	C10 - C30		C20	E01
All engines	version Hitachi			2.7968	3.7995					
All engines							9.6114	C10		4.9699

INSIGHT

				ENGINE
1.3 IMA	Petrol/ Electric	65	04/09->	LDA3

Engine	Information	A10	A20	A40	A50	A70	C10 - C30		C20	E01
All engines	FP: Upper, x 4, COIL ON PLUG						9.6427	C10		

A10	CONDENSER	A20	CONTACT SET	A40	DISTRIBUTOR CAP	A50	ROTOR	A70	PICK-UP
C10	COIL	C20	IGNITION MODULE	C30	ELECTRONIC IGNITION KIT	E01	IGNITION CABLE SET		

The present application list is a brief version. For the detailed information about the possibility of installation on a specific vehicle, please refer to our web-catalogue http://catalogo.facet.eu/

Vehicle	alim.	kW	Date	Engine	FUNCTIONS ON THE VEHICLE A10	A20	A40	A50	A70	C10 - C30	C20	E01
1.3 IMA	Petrol/ Electric	73	04/09->	LDA3								
Engine	Information											
All engines	FP: Upper, x 4, COIL ON PLUG									9.6427 C10		
INTEGRA												
1.8 i	Petrol	106	01/98->	B18B1, B18C3								
Engine	Information											
Eng. B18B1	version Hitachi						2.7968	3.7995				
All engines										9.6114 C10		
Eng. B18B1												4.9709
1.8 Type-R	Petrol	140	11/97-10/01	B18C6								
Engine	Information											
All engines	x 1, TEC, DISTRIBUTOR									9.6114 C10		
JAZZ I												
1.2 i-DSI	Petrol	57	03/02-07/08	L12A1, L12A3, L12A4								
Engine	Information											
All engines	FP: Front, x 4, COIL ON PLUG									9.6429 C10		
All engines	FP: Rear, x 4, COIL ON PLUG									9.6508 C10		
1.3 iDSi	Petrol	61	03/02-07/08	L13A1, L13A6								
Engine	Information											
All engines	FP: Front, x 4, COIL ON PLUG									9.6429 C10		
All engines	FP: Rear, x 4, COIL ON PLUG									9.6508 C10		
1.4	Petrol	65	04/05-07/08	L13A5								
Engine	Information											
All engines	Qty: 4									9.6429, 9.6508 C10		
1.4 iDSI	Petrol	61	12/06-10/08	L13A1, L13A6								
Engine	Information											
All engines	FP: Front, x 4, COIL ON PLUG									9.6429 C10		
All engines	FP: Rear, x 4, COIL ON PLUG									9.6508 C10		
45 1.2	Petrol	33	02/84-10/86	ER2								
Engine	Information											
All engines	version Hitachi							3.7956				
JAZZ III												
1.2	Petrol	66	07/08->	L12B1, L12B2								
Engine	Information											
All engines	x 4, COIL ON PLUG									9.6503 C10		
1.3 HYBRID	Petrol/ Electric	65	04/11->	LDA3								
Engine	Information											
All engines	FP: Upper, x 4, COIL ON PLUG									9.6427 C10		
1.3 i	Petrol	73	07/08->	L13Z1, L13Z2								
Engine	Information											
All engines	x 4, COIL ON PLUG									9.6503 C10		
1.4	Petrol	74	11/08->	L13Z1								
Engine	Information											
All engines	x 4, COIL ON PLUG									9.6503 C10		
1.5 i-VTEC	Petrol	88	07/08-06/14	L15-A7								
Engine	Information											
All engines	Qty: 4									9.6503 C10		

A10	CONDENSER	A20	CONTACT SET	A40	DISTRIBUTOR CAP	A50	ROTOR	A70	PICK-UP
C10	COIL	C20	IGNITION MODULE	C30	ELECTRONIC IGNITION KIT	E01	IGNITION CABLE SET		

The present application list is a brief version. For the detailed information about the possibility of installation on a specific vehicle, please refer to our web-catalogue http://catalogo.facet.eu/

Vehicle	alim.	kW	Date	Engine	FUNCTIONS ON THE VEHICLE A10	A20	A40	A50	A70	C10 - C30	C20	E01
LEGEND I												
2.7 i 24V	Petrol	124	10/87-12/90	**C27A1**								
All engines	version Hitachi									9.6111 C10		
LEGEND IV												
3.5 i	Petrol	217	10/04->	**J35A8**								
All engines	Qty: 6									9.6357 C10		
3.5 V6 4WD	Petrol	217	05/06-12/12	**J35A8**								
All engines	x 6, COIL ON PLUG									9.6357 C10		
3.5 VTEC V6	Petrol	221	10/04-06/09	**C35A8**								
All engines	Qty: 6									9.6357 C10		
3.7 VTEC V6 4WD	Petrol	226	08/08-12/13	**J37A3**								
All engines	->year 01/12/08, x 6, COIL ON PLUG									9.6357 C10		
LOGO												
1.3	Petrol	48	03/99-03/02	**D13B7**								
All engines	version Hitachi						2.7968	3.7995				
All engines	x 1, TEC, DISTRIBUTOR									9.6114 C10		
MR-V												
3.5	Petrol	179	01/03->	**J35A4, J35A6, J35A9**								
All engines	Qty: 6									9.6357 C10		
ODYSSEY												
2.3	Petrol	110	10/97-09/03	**F23A, F23A7**								
All engines	version Hitachi							3.7998				
All engines										9.6247 C10		
2.3 4x4	Petrol	110	10/97-09/03	**F23A**								
All engines	version Hitachi							3.7998				
All engines										9.6247 C10		
3.5	Petrol	171	01/05->	**J35A6**								
All engines	Qty: 6									9.6357 C10		
3.5	Petrol	179	01/02-08/04	**J35A4**								
All engines	Qty: 6									9.6357 C10		
PASSPORT												
2.6 i [USA]	Petrol	88	01/94->	**4ZE1**								
All engines	version Hitachi						2.7960	3.7969				
PRELUDE IV												
2.0 i 16V	Petrol	98	02/92-09/96	**F20A4**								
All engines	version Hitachi						2.7968	3.7995				

A10	CONDENSER	**A20**	CONTACT SET	**A40**	DISTRIBUTOR CAP	**A50**	ROTOR	**A70**	PICK-UP
C10	COIL	**C20**	IGNITION MODULE	**C30**	ELECTRONIC IGNITION KIT	**E01**	IGNITION CABLE SET		

The present application list is a brief version. For the detailed information about the possibility of installation on a specific vehicle, please refer to our web-catalogue http://catalogo.facet.eu/

Vehicle	alim.	kW	Date	Engine	FUNCTIONS ON THE VEHICLE A10	A20	A40	A50	A70	C10 - C30	C20	E01

PRELUDE IV

Vehicle	alim.	kW	Date	Engine
2.0 i 16V	Petrol	98	02/92-09/96	F20A4

Engine	Information	A10	A20	A40	A50	A70	C10 - C30		C20	E01
All engines							9.6114	C10		4.9711
All engines	->eng. 9204631								9.4052	

Vehicle	alim.	kW	Date	Engine
2.2 i 16V Vtec	Petrol	136	02/93-09/96	H22A2

Engine	Information	A10	A20	A40	A50	A70	C10 - C30		C20	E01
All engines	version Hitachi			2.7968	3.7995					
All engines							9.6114	C10		
All engines	->eng. 1001957								9.4052	

Vehicle	alim.	kW	Date	Engine
2.3 i 16V	Petrol	118	02/92-09/96	H23A2

Engine	Information	A10	A20	A40	A50	A70	C10 - C30		C20	E01
All engines	version Hitachi			2.7968	3.7995					
All engines							9.6114	C10		
All engines	->eng. 2001742								9.4052	

PRELUDE V

Vehicle	alim.	kW	Date	Engine
2.0 16V	Petrol	98	10/96-10/00	F20A4

Engine	Information	A10	A20	A40	A50	A70	C10 - C30		C20	E01
All engines	version Hitachi			2.7968	3.7995					
All engines	x 1, TEC, DISTRIBUTOR						9.6114	C10		
All engines										4.9711

Vehicle	alim.	kW	Date	Engine
2.2 16V	Petrol	136	10/96-10/00	H22A5

Engine	Information	A10	A20	A40	A50	A70	C10 - C30		C20	E01
All engines	version Hitachi			2.7968	3.7995					
All engines	x 1, TEC, DISTRIBUTOR						9.6114	C10		

Vehicle	alim.	kW	Date	Engine
2.2 16V	Petrol	147	10/96-10/00	H22A5, H22A8

Engine	Information	A10	A20	A40	A50	A70	C10 - C30		C20	E01
Eng. H22A5	version Hitachi			2.7968	3.7995					
All engines	x 1, TEC, DISTRIBUTOR						9.6114	C10		

Vehicle	alim.	kW	Date	Engine
2.2 i 16V	Petrol	136	10/96-10/01	F22A2

Engine	Information	A10	A20	A40	A50	A70	C10 - C30		C20	E01
All engines	version Hitachi			2.7968	3.7995					
All engines							9.6114	C10		4.9711

Vehicle	alim.	kW	Date	Engine
2.2 i 16V VTi-R	Petrol	147	10/96-12/01	H22A4, H22A8, H22Z1

Engine	Information	A10	A20	A40	A50	A70	C10 - C30		C20	E01
Eng. H22A8	version Hitachi			2.7968						
Eng. H22A4, H22Z1	version Hitachi			2.7976						
All engines	version Hitachi				3.7995					
Eng. H22A8							9.6114	C10		

Vehicle	alim.	kW	Date	Engine
2.2 Si	Petrol	118	03/97-07/02	F22Z6

Engine	Information	A10	A20	A40	A50	A70	C10 - C30		C20	E01
All engines	version Hitachi			2.7968	3.7995					
All engines							9.6114	C10		

SHUTTLE

Vehicle	alim.	kW	Date	Engine
2.2 16V	Petrol	110	10/94-02/98	F22B8

Engine	Information	A10	A20	A40	A50	A70	C10 - C30		C20	E01
All engines	version Hitachi			2.7968	3.7995					
All engines							9.6114	C10		4.9711

Vehicle	alim.	kW	Date	Engine
2.3 16V	Petrol	110	10/97-06/04	F23A7

Engine	Information	A10	A20	A40	A50	A70	C10 - C30		C20	E01
All engines	version Hitachi				3.7998					

A10	CONDENSER	A20	CONTACT SET	A40	DISTRIBUTOR CAP	A50	ROTOR	A70	PICK-UP
C10	COIL	C20	IGNITION MODULE	C30	ELECTRONIC IGNITION KIT	E01	IGNITION CABLE SET		

The present application list is a brief version. For the detailed information about the possibility of installation on a specific vehicle, please refer to our web-catalogue http://catalogo.facet.eu/

Vehicle	alim.	kW	Date	Engine	FUNCTIONS ON THE VEHICLE							
					A10	A20	A40	A50	A70	C10 - C30	C20	E01
				ENGINE								
2.3 16V	Petrol	110	10/97-06/04	F23A7								

Engine	Information	A10	A20	A40	A50	A70	C10 - C30		C20	E01
All engines							9.6247	C10		

STREAM

				ENGINE
1.7 16V	Petrol	92	05/01-09/06	D17A2

Engine	Information	A10	A20	A40	A50	A70	C10 - C30		C20	E01
All engines	x 4, COIL ON PLUG						9.6357	C10		

A10	CONDENSER	A20	CONTACT SET	A40	DISTRIBUTOR CAP	A50	ROTOR	A70	PICK-UP
C10	COIL	C20	IGNITION MODULE	C30	ELECTRONIC IGNITION KIT	E01	IGNITION CABLE SET		

The present application list is a brief version. For the detailed information about the possibility of installation on a specific vehicle, please refer to our web-catalogue http://catalogo.facet.eu/

Vehicle	alim.	kW	Date	Engine	FUNCTIONS ON THE VEHICLE: A10	A20	A40	A50	A70	C10 - C30	C20	E01

ACCENT

				ENGINE
1.4 CVVT	Petrol	79	11/10->	G4FA

Engine	Information	A10	A20	A40	A50	A70	C10 - C30		C20	E01
All engines	x 4, COIL ON PLUG						9.6443	C10		

ACCENT I

				ENGINE
1.3	Petrol	44	10/94-01/00	G4EH

Engine	Information	A10	A20	A40	A50	A70	C10 - C30		C20	E01
All engines										4.7119

				ENGINE
1.3	Petrol	55	10/94-01/00	G4EH

Engine	Information	A10	A20	A40	A50	A70	C10 - C30		C20	E01
All engines										4.7119

				ENGINE
1.3 i 12V	Petrol	62	10/94-01/00	G4EH

Engine	Information	A10	A20	A40	A50	A70	C10 - C30		C20	E01
All engines										4.7119

				ENGINE
1.5	Petrol	63	10/94-07/99	G4EK

Engine	Information	A10	A20	A40	A50	A70	C10 - C30		C20	E01
All engines										4.7119

				ENGINE
1.5 i 12V	Petrol	65	10/94-01/00	G4EK

Engine	Information	A10	A20	A40	A50	A70	C10 - C30		C20	E01
All engines										4.7119

				ENGINE
1.5 i 16V	Petrol	73	10/95-01/00	G4ER

Engine	Information	A10	A20	A40	A50	A70	C10 - C30		C20	E01
All engines	09/12/96 ->									4.7111

ACCENT II

				ENGINE
1.3	Petrol	55	01/00-11/05	G4EA

Engine	Information	A10	A20	A40	A50	A70	C10 - C30		C20	E01
All engines	FP: Left, FP: Left Front, x 1, D.I.S.						9.6483	C10		
All engines	FP: right, x 1, D.I.S.						9.6485	C10		
All engines										4.7119

				ENGINE
1.3	Petrol	61	01/00-11/05	G4EA

Engine	Information	A10	A20	A40	A50	A70	C10 - C30		C20	E01
All engines	FP: Left, FP: Left Front, x 1, D.I.S.						9.6483	C10		
All engines	FP: right, x 1, D.I.S.						9.6485	C10		
All engines										4.7119

				ENGINE
1.3	Petrol	62	08/02-11/05	G4EA, G4EH

Engine	Information	A10	A20	A40	A50	A70	C10 - C30		C20	E01
Eng. G4EH							9.6482, 9.6483	C10		4.7119
Eng. G4EA	FP: Left, FP: Left Front, x 1, D.I.S.						9.6483	C10		
Eng. G4EA	FP: right, x 1, D.I.S.						9.6485	C10		
Eng. G4EH	Kit						9.6485	C10		

				ENGINE
1.3	Petrol	63	01/00-11/05	G4EA

Engine	Information	A10	A20	A40	A50	A70	C10 - C30		C20	E01
All engines	FP: Left, FP: Left Front, x 1, D.I.S.						9.6483	C10		
All engines	FP: right, x 1, D.I.S.						9.6485	C10		
All engines										4.7119

				ENGINE
1.5	Petrol	65	09/99-10/02	G4EK

Engine	Information	A10	A20	A40	A50	A70	C10 - C30		C20	E01
All engines							9.6482, 9.6483	C10		4.7119
All engines	Kit						9.6485	C10		

A10	CONDENSER	A20	CONTACT SET	A40	DISTRIBUTOR CAP	A50	ROTOR	A70	PICK-UP
C10	COIL	C20	IGNITION MODULE	C30	ELECTRONIC IGNITION KIT	E01	IGNITION CABLE SET		

The present application list is a brief version. For the detailed information about the possibility of installation on a specific vehicle, please refer to our web-catalogue http://catalogo.facet.eu/

Vehicle	alim.	kW	Date	Engine	FUNCTIONS ON THE VEHICLE							
					A10	A20	A40	A50	A70	C10 - C30	C20	E01
1.5	Petrol	66	01/00-11/05	ENGINE G4EB								
Engine	Information											
All engines	FP: Left, FP: Left Front, x 1, D.I.S.									9.6483 C10		
All engines	FP: right, x 1, D.I.S.									9.6485 C10		
All engines												4.7119
1.5	Petrol	68	01/00-10/02	ENGINE G4EK								
Engine	Information											
All engines	FP: Left, FP: Left Front, x 1, D.I.S.									9.6483 C10		
All engines	FP: right, x 1, D.I.S.									9.6485 C10		
1.5	Petrol	69	01/00-12/06	ENGINE G4EK								
Engine	Information											
All engines	FP: Left, FP: Left Front, x 1, D.I.S.									9.6483 C10		
All engines	FP: right, x 1, D.I.S.									9.6485 C10		
1.5	Petrol	73	09/99-10/02	ENGINE G4FK								
Engine	Information											
All engines	x 1, D.I.S.									9.6485 C10		
1.5	Petrol	75	09/99-11/05	ENGINE G4EC-G, G4FK								
Engine	Information											
Eng. G4FK	FP: right, x 1, D.I.S.									9.6482 C10		
Eng. G4FK	FP: Left, FP: Left Front, x 1, D.I.S.									9.6484 C10		
Eng. G4EC-G	x 1, D.I.S.									9.6485 C10		
All engines												4.7111
1.5	Petrol	77	09/99-10/02	ENGINE G4FK								
Engine	Information											
All engines	x 1, D.I.S.									9.6485 C10		
1.6	Petrol	77	12/02-11/05	ENGINE G4ED, G4ED-G								
Engine	Information											
Eng. G4ED-G										9.6482, 9.6484 C10		4.7111
Eng. G4ED	x 1, D.I.S.									9.6486 C10		
Eng. G4ED-G	Kit									9.6486 C10		
ACCENT III												
1.4 GL	Petrol	71	11/05-11/10	ENGINE G4EE								
Engine	Information											
All engines	Fitting Position:for cylinder 1, Fitting Position:for cylinder 4, x 1, D.I.S.									9.6482 C10		
All engines	Fitting Position:for cylinder 2, Fitting Position:for cylinder 3, x 1, D.I.S.									9.6484 C10		
All engines												4.7111
1.6 GLS	Petrol	82	11/05-11/10	ENGINE G4ED								
Engine	Information											
All engines												4.7111
ACCENT IV												
1.4	Petrol	74	11/10->	ENGINE G4LC								
Engine	Information											
All engines	x 4, COIL ON PLUG									9.6522 C10		
1.4	Petrol	79	11/10->	ENGINE G4FA								
Engine	Information											
All engines	x 4, COIL ON PLUG									9.6443 C10		
1.4 CVT	Petrol	0	11/10->	ENGINE --								
Engine	Information											
All engines	Qty: 4									9.6522 C10		

A10	CONDENSER	A20	CONTACT SET	A40	DISTRIBUTOR CAP	A50	ROTOR	A70	PICK-UP
C10	COIL	C20	IGNITION MODULE	C30	ELECTRONIC IGNITION KIT	E01	IGNITION CABLE SET		

The present application list is a brief version. For the detailed information about the possibility of installation on a specific vehicle, please refer to our web-catalogue http://catalogo.facet.eu/

Vehicle	alim.	kW	Date	Engine	FUNCTIONS ON THE VEHICLE A10	A20	A40	A50	A70	C10 - C30	C20	E01
1.6	Petrol	90	11/10->	ENGINE G4FC								
Engine: All engines	Information: x 4, COIL ON PLUG									9.6443 C10		
1.6	Petrol	91	11/10->	ENGINE G4FC								
Engine: All engines	Information: Qty: 4									9.6443 C10		
ACCENT V												
1.4	Petrol	74	07/18->	ENGINE G4LC								
Engine: All engines	Information: x 4, COIL ON PLUG									9.6522 C10		
ATOS												
1.0 i	Petrol	40	02/98-12/00	ENGINE G4HC								
Engine: All engines	Information: ->year 13/11/98, version Mitsubishi						2.8322/21					
All engines	13/11/98 ->, ->year 14/08/00, version Mitsubishi						2.8322/70	3.8331/38				
All engines	x 1, D.I.S., connector type DIN ---------- ->year 01/08/00, x 1, D.I.S., connector type DIN									9.6294 C10		
All engines	01/09/01 ->, x 2, D.I.S., connector type DIN									9.6396 C10		
All engines	->year 14/08/00											4.7120
All engines	14/08/00 ->											4.7235
1.0 i	Petrol	41	02/98-03/02	ENGINE G4HC								
Engine: All engines	Information: ->year 13/11/98, version Mitsubishi						2.8322/21					
All engines	13/11/98 ->, ->year 14/08/00, version Mitsubishi						2.8322/70	3.8331/38				
All engines	->year 14/08/00											4.7120
All engines	14/08/00 ->											4.7235
1.0 i	Petrol	43	03/01-07/03	ENGINE G4HC, G4HC-E								
Engine: Eng. G4HC	Information: x 2, D.I.S., connector type DIN									9.6396 C10		
Eng. G4HC-E	15/04/03 ->											4.7119
Eng. G4HC-E	->year 15/04/03											4.7235
1.1	Petrol	43	08/03-12/08	ENGINE G4HD								
Engine: All engines	Information: Fitting Position:for cylinder 1-4, Fitting Position:for cylinder 2, x 1, D.I.S., Fitting Position:for cylinder 3, x 1, D.I.S., x 1, D.I.S.									9.6396 C10		
All engines												4.7119
1.1	Petrol	45	06/03-12/10	ENGINE G4HG								
Engine: All engines	Information: Qty: 2									9.6396 C10		
All engines												4.7119
1.1	Petrol	46	08/03-12/08	ENGINE G4HG								
Engine: All engines	Information: x 1, D.I.S.									9.6396 C10		
All engines												4.7119
ATOS PRIME												
1.0 i	Petrol	40	08/99->	ENGINE G4HC								
Engine: All engines	Information: ->year 13/11/98, version Mitsubishi						2.8322/21					
All engines	13/11/98 ->, ->year 14/08/00, version Mitsubishi						2.8322/70	3.8331/38				
All engines	->year 14/08/00											4.7120
All engines	14/08/00 ->											4.7235

A10	CONDENSER	A20	CONTACT SET	A40	DISTRIBUTOR CAP	A50	ROTOR	A70	PICK-UP
C10	COIL	C20	IGNITION MODULE	C30	ELECTRONIC IGNITION KIT	E01	IGNITION CABLE SET		

The present application list is a brief version. For the detailed information about the possibility of installation on a specific vehicle, please refer to our web-catalogue http://catalogo.facet.eu/

Vehicle	alim.	kW	Date	Engine	FUNCTIONS ON THE VEHICLE A10	A20	A40	A50	A70	C10 - C30	C20	E01
1.0 i	Petrol	43	03/01-07/03	G4HC-E								
Engine	Information											
All engines	Qty: 2									9.6396 C10		
All engines	15/04/03 ->											4.7119
All engines	->year 15/04/03											4.7235
1.1	Petrol	43	08/03-05/05	G4HD								
Engine	Information											
All engines	Qty: 2									9.6396 C10		
All engines												4.7119
1.1	Petrol	46	01/97-12/08	G4HG								
Engine	Information											
All engines	Qty: 2									9.6396 C10		
All engines												4.7119
BAYON												
1.4 MPI	Petrol	74	05/21->	G4LC								
Engine	Information											
All engines	x 4, COIL ON PLUG									9.6522 C10		
COUPE I												
1.6 16V	Petrol	85	03/98-04/02	G4GR								
Engine	Information											
All engines	Coupe, 01/07/00 ->, x 1, D.I.S.									9.6486 C10		
All engines	01/06/00 ->											4.7111
All engines	->year 01/06/00											4.9385
1.6 i 16V	Petrol	84	12/96-04/02	4G61, G4GR								
Engine	Information											
Eng. 4G61	01/06/00 ->, Kit									9.6486 C10		
Eng. G4GR	Coupe, 01/07/00 ->, x 1, D.I.S.									9.6486 C10		
Eng. 4G61	01/06/00 ->											4.7111
Eng. 4G61	->year 01/06/00											4.9385
2.0 16V	Petrol	102	08/96-04/02	G4GF								
Engine	Information											
All engines												4.9385
COUPE II												
1.6 16V	Petrol	77	03/02-08/09	G4ED, G4ED-G								
Engine	Information											
Eng. G4ED-G										9.6482, 9.6484 C10		4.7111
Eng. G4ED	Coupe, x 1, D.I.S.									9.6486 C10		
Eng. G4ED-G	Kit									9.6486 C10		
1.6 16V	Petrol	79	03/02-08/09	G4ED, G4ED-G								
Engine	Information											
Eng. G4ED-G										9.6482, 9.6484 C10		4.7111
Eng. G4ED	Coupe, x 1, D.I.S.									9.6486 C10		
Eng. G4ED-G	Kit									9.6486 C10		
2.0	Petrol	100	08/01-08/09	G4GC, G4GC-G								
Engine	Information											
Eng. G4GC	Coupe, 01/09/02 ->, x 1, D.I.S.									9.6481 C10		
Eng. G4GC-G	01/09/02 ->, Qty: 2									9.6481 C10		
Eng. G4GC-G												4.9385
2.0	Petrol	102	03/02-08/09	G4GC, G4GC-G								
Engine	Information											
Eng. G4GC	Coupe, 01/09/02 ->, x 1, D.I.S.									9.6481 C10		

A10	CONDENSER	A20	CONTACT SET	A40	DISTRIBUTOR CAP	A50	ROTOR	A70	PICK-UP
C10	COIL	C20	IGNITION MODULE	C30	ELECTRONIC IGNITION KIT	E01	IGNITION CABLE SET		

The present application list is a brief version. For the detailed information about the possibility of installation on a specific vehicle, please refer to our web-catalogue http://catalogo.facet.eu/

Vehicle	alim.	kW	Date	Engine	FUNCTIONS ON THE VEHICLE A10	A20	A40	A50	A70	C10 - C30	C20	E01
2.0	Petrol	102	03/02-08/09	**G4GC, G4GC-G**								
Eng. G4GC-G	01/09/02 ->, Qty: 2									9.6481 C10		
Eng. G4GC-G												4.9385
2.0 GLS	Petrol	105	02/03-08/09	**G4GC, G4GC-G**								
Eng. G4GC	Coupe, x 1, D.I.S.									9.6481 C10		
Eng. G4GC-G	Qty: 2									9.6481 C10		
Eng. G4GC-G												4.9385
2.7 V6	Petrol	121	01/01-08/09	**G6BA-G**								
All engines												4.7236
2.7 V6	Petrol	123	03/02-08/09	**G6BA-G**								
All engines												4.7236
CRETA												
1.6	Petrol	90	01/16->	**G4FG**								
All engines	x 4, COIL ON PLUG									9.6443 C10		
1.6 4WD	Petrol	90	08/16->	**G4FG**								
All engines	euro 5, x 4, COIL ON PLUG									9.6443 C10		
ELANTRA I												
1.5 i GL	Petrol	62	12/90-08/94	**G4DJ**								
All engines	SOHC/OHC, version Mitsubishi						2.8303/1	3.8331/7				
All engines	DOHC											4.9401
1.6i 16V	Petrol	84	12/90-05/95	**G4CR**								
All engines												4.9401
1.8i 16V	Petrol	93	06/92-12/95	**G4CN**								
All engines												4.9401
ELANTRA II												
1.6 i 16V	Petrol	84	06/95-05/00	**G4GR**								
All engines												4.9385
1.8 i 16V	Petrol	93	05/95-05/00	**G4GM**								
All engines												4.9385
1.8 i 16V	Petrol	94	09/95-05/00	**G4GM**								
All engines												4.9385
2.0 i 16V	Petrol	102	06/97-05/00	**G4DF**								
All engines												4.9385

A10	CONDENSER	**A20**	CONTACT SET	**A40**	DISTRIBUTOR CAP	**A50**	ROTOR	**A70**	PICK-UP
C10	COIL	**C20**	IGNITION MODULE	**C30**	ELECTRONIC IGNITION KIT	**E01**	IGNITION CABLE SET		

The present application list is a brief version. For the detailed information about the possibility of installation on a specific vehicle, please refer to our web-catalogue http://catalogo.facet.eu/

Vehicle	alim.	kW	Date	Engine	FUNCTIONS ON THE VEHICLE: A10	A20	A40	A50	A70	C10 - C30	C20	E01

ELANTRA III

1.6	Petrol	66	06/00-07/06	ENGINE: G4GR

Engine	Information	A10	A20	A40	A50	A70	C10 - C30		C20	E01
All engines	x 1, D.I.S.						9.6486	C10		
All engines										4.7111

1.6	Petrol	77	05/03-07/06	ENGINE: G4ED, G4ED-G

Engine	Information	A10	A20	A40	A50	A70	C10 - C30		C20	E01
Eng. G4ED-G							9.6482, 9.6484	C10		4.7111
Eng. G4ED	x 1, D.I.S.						9.6486	C10		
Eng. G4ED-G	Kit						9.6486	C10		

1.6	Petrol	79	06/00-07/06	ENGINE: G4ED, G4ED-G

Engine	Information	A10	A20	A40	A50	A70	C10 - C30		C20	E01
Eng. G4ED-G							9.6482, 9.6484	C10		4.7111
Eng. G4ED	x 1, D.I.S.						9.6486	C10		
Eng. G4ED-G	Kit						9.6486	C10		

1.6	Petrol	82	09/03-07/06	ENGINE: G4GA

Engine	Information	A10	A20	A40	A50	A70	C10 - C30		C20	E01
All engines							9.6482, 9.6484	C10		4.7111
All engines	Kit						9.6486	C10		
All engines	x 1, D.I.S.						9.6486	C10		

1.8	Petrol	79	06/00-07/03	ENGINE: G4BB

Engine	Information	A10	A20	A40	A50	A70	C10 - C30		C20	E01
All engines	01/09/02 ->, Qty: 2						9.6481	C10		
All engines	01/10/02 ->, x 1, D.I.S.						9.6481	C10		
All engines										4.9385

1.8	Petrol	97	06/00-07/06	ENGINE: G4BB, G4GB

Engine	Information	A10	A20	A40	A50	A70	C10 - C30		C20	E01
All engines	01/10/02 ->, x 1, D.I.S.						9.6481	C10		
All engines										4.9385

1.8	Petrol	98	11/02-07/06	ENGINE: G4GB

Engine	Information	A10	A20	A40	A50	A70	C10 - C30		C20	E01
All engines	Qty: 2						9.6481	C10		
All engines										4.9385

2.0	Petrol	102	06/00-07/06	ENGINE: G4GC, G4GC-G

Engine	Information	A10	A20	A40	A50	A70	C10 - C30		C20	E01
Eng. G4GC	01/10/02 ->, x 1, D.I.S.						9.6481	C10		
Eng. G4GC-G	01/09/02 ->, Qty: 2						9.6481	C10		
Eng. G4GC-G										4.9385

2.0	Petrol	104	06/00-07/06	ENGINE: G4GC

Engine	Information	A10	A20	A40	A50	A70	C10 - C30		C20	E01
All engines	01/10/02 ->, x 1, D.I.S.						9.6481	C10		
All engines										4.9385

2.0	Petrol	105	10/03-07/06	ENGINE: G4GC

Engine	Information	A10	A20	A40	A50	A70	C10 - C30		C20	E01
All engines	x 1, D.I.S.						9.6481	C10		
All engines										4.9385

ELANTRA IV

1.6 CVVT	Petrol	90	06/06-06/11	ENGINE: G4FC

Engine	Information	A10	A20	A40	A50	A70	C10 - C30		C20	E01
All engines	x 4, COIL ON PLUG						9.6395	C10		

A10	CONDENSER	A20	CONTACT SET	A40	DISTRIBUTOR CAP	A50	ROTOR	A70	PICK-UP
C10	COIL	C20	IGNITION MODULE	C30	ELECTRONIC IGNITION KIT	E01	IGNITION CABLE SET		

The present application list is a brief version. For the detailed information about the possibility of installation on a specific vehicle, please refer to our web-catalogue http://catalogo.facet.eu/

Vehicle	alim.	kW	Date	Engine	FUNCTIONS ON THE VEHICLE A10	A20	A40	A50	A70	C10 - C30	C20	E01
2.0 CVVT	Petrol	103	06/06-05/10	G4GC								
Engine	Information											
All engines	x 1, D.I.S.									9.6481 C10		
All engines												4.9385
2.0 CVVT	Petrol	105	06/06-06/11	G4GC								
Engine	Information											
All engines	Qty: 2									9.6481 C10		
All engines	x 1, D.I.S.									9.6481 C10		
All engines												4.9385
ELANTRA V												
1.6	Petrol	94	04/11->	G4FG								
Engine	Information											
All engines	Qty: 4									9.6443 C10		
All engines	x 4, COIL ON PLUG									9.6443 C10		
1.6	Petrol	96	06/11-12/15	G4FG								
Engine	Information											
All engines	x 4, COIL ON PLUG									9.6443 C10		
1.6	Petrol	97	06/11-12/15	G4FG								
Engine	Information											
All engines	x 4, COIL ON PLUG									9.6443 C10		
EQUUS / CENTENNIAL II												
3.8	Petrol	246	01/13->	--								
Engine	Information											
All engines	Qty: 6									9.6392 C10		
4.6 V8	Petrol	274	03/09->	G8BA								
Engine	Information											
All engines	Qty: 8									9.6456 C10		
EXCEL												
1.3	Petrol	51	09/89-07/91	G4DG								
Engine	Information											
All engines	version Mitsubishi						2.8303/1	3.8323				
1.3 i 12V	Petrol	63	09/94-08/99	G4EH								
Engine	Information											
All engines												4.7119
1.5 i 12V	Petrol	65	09/94-08/99	G4EK								
Engine	Information											
All engines												4.7119
1.5 i 16V GT	Petrol	73	10/96-08/99	G4ER								
Engine	Information											
All engines	09/12/96 ->											4.7111
GALLOPER												
3.0 V6	Petrol	104	08/98-12/03	G6AT								
Engine	Information											
All engines							2.8322/16					
All engines	version Mitsubishi							3.8331/9				
GENESIS												
2.0	Petrol	191	01/13->	G4KF								
Engine	Information											
All engines	x 4, COIL ON PLUG									9.6456 C10		

A10	CONDENSER	A20	CONTACT SET	A40	DISTRIBUTOR CAP	A50	ROTOR	A70	PICK-UP
C10	COIL	C20	IGNITION MODULE	C30	ELECTRONIC IGNITION KIT	E01	IGNITION CABLE SET		

The present application list is a brief version. For the detailed information about the possibility of installation on a specific vehicle, please refer to our web-catalogue http://catalogo.facet.eu/

Vehicle	alim.	kW	Date	Engine	FUNCTIONS ON THE VEHICLE							
					A10	A20	A40	A50	A70	C10 - C30	C20	E01
2.0 CVVT	Petrol	154	06/08-02/14	G4KF								
Engine: All engines	Information: x 4, COIL ON PLUG									9.6456 C10		
2.0 CVVT	Petrol	184	02/13-02/14	G4KF								
Engine: All engines	Information: x 4, COIL ON PLUG									9.6456 C10		
2.0 T	Petrol	157	01/08-12/12	G4KF								
Engine: All engines	Information: x 4, COIL ON PLUG									9.6456 C10		
2.0 T	Petrol	202	11/11-12/14	G4KF								
Engine: All engines	Information: x 4, COIL ON PLUG									9.6456 C10		
2.0 TCi	Petrol	191	01/11->	--								
Engine: All engines	Information: Qty: 4									9.6456 C10		
3.0 GDI	Petrol	183	06/14->	G6DG								
Engine: All engines	Information: x 6, COIL ON PLUG									9.6392 C10		
3.0 GDI 4WD	Petrol	183	06/14->	G6DG								
Engine: All engines	Information: x 6, COIL ON PLUG									9.6392 C10		
3.8	Petrol	228	09/09->	G6DA								
Engine: All engines	Information: Qty: 6									9.6392 C10		
3.8 GDI	Petrol	232	06/14->	G6DJ								
Engine: All engines	Information: x 6, COIL ON PLUG									9.6392 C10		
3.8 GDI 4WD	Petrol	232	06/14->	G6DJ								
Engine: All engines	Information: x 6, COIL ON PLUG									9.6392 C10		
3.8 V6	Petrol	213	01/08-12/14	G6DA								
Engine: All engines	Information: x 6, COIL ON PLUG									9.6392 C10		
3.8 V6	Petrol	223	01/08-02/14	G6DA								
Engine: All engines	Information: x 6, COIL ON PLUG									9.6392 C10		
3.8 V6	Petrol	246	01/11-12/14	G6DJ								
Engine: All engines	Information: x 6, COIL ON PLUG									9.6392 C10		
3.8 V6	Petrol	255	11/11-12/14	G6DJ								
Engine: All engines	Information: x 6, COIL ON PLUG									9.6392 C10		
3.8 V6	Petrol	260	04/12->	G6DJ								
Engine: All engines	Information: Qty: 6									9.6392 C10		

A10	CONDENSER	A20	CONTACT SET	A40	DISTRIBUTOR CAP	A50	ROTOR	A70	PICK-UP
C10	COIL	C20	IGNITION MODULE	C30	ELECTRONIC IGNITION KIT	E01	IGNITION CABLE SET		

The present application list is a brief version. For the detailed information about the possibility of installation on a specific vehicle, please refer to our web-catalogue http://catalogo.facet.eu/

Vehicle	alim.	kW	Date	Engine	FUNCTIONS ON THE VEHICLE							
					A10	A20	A40	A50	A70	C10 - C30	C20	E01

GETZ

				ENGINE
1.1	Petrol	46	09/02-09/05	G4HD

Engine	Information	A10	A20	A40	A50	A70	C10 - C30		C20	E01
All engines	Fitting Position:for cylinder 1, Fitting Position:for cylinder 2, Fitting Position:for cylinder 3, Fitting Position:for cylinder 4, x 1, D.I.S.						9.6487	C10		
All engines	15/04/03 ->									4.7119
All engines	->year 15/04/03									4.7235

				ENGINE
1.1	Petrol	49	09/05-06/09	G4HD

Engine	Information	A10	A20	A40	A50	A70	C10 - C30		C20	E01
All engines	Fitting Position:for cylinder 1-2, Fitting Position:for cylinder 3-4, x 1, D.I.S.						9.6487	C10		
All engines										4.7235

				ENGINE
1.3	Petrol	61	09/04-06/09	G4EA

Engine	Information	A10	A20	A40	A50	A70	C10 - C30		C20	E01
All engines							9.6482, 9.6483	C10		4.7119
All engines	Kit						9.6485	C10		

				ENGINE
1.3	Petrol	63	09/03-09/05	G4EA

Engine	Information	A10	A20	A40	A50	A70	C10 - C30		C20	E01
All engines	Fitting Position:for cylinder 1, Fitting Position:for cylinder 4, x 1, D.I.S.						9.6482	C10		
All engines	Fitting Position:for cylinder 2, Fitting Position:for cylinder 3, x 1, D.I.S.						9.6483	C10		
All engines										4.7119

				ENGINE
1.3 i	Petrol	60	09/02-03/04	G4EA

Engine	Information	A10	A20	A40	A50	A70	C10 - C30		C20	E01
All engines	FP: right, x 1, D.I.S.						9.6482	C10		
All engines	FP: Left, FP: Left Front, x 1, D.I.S.						9.6483	C10		
All engines										4.7119

				ENGINE
1.4 i	Petrol	71	08/05-12/10	G4EE

Engine	Information	A10	A20	A40	A50	A70	C10 - C30		C20	E01
All engines	Fitting Position:for cylinder 1, Fitting Position:for cylinder 4, x 1, D.I.S.						9.6482	C10		
All engines	Fitting Position:for cylinder 2, Fitting Position:for cylinder 3, x 1, D.I.S.						9.6484	C10		
All engines										4.7111

				ENGINE
1.6	Petrol	77	09/02-09/05	G4ED, G4ED-G

Engine	Information	A10	A20	A40	A50	A70	C10 - C30		C20	E01
Eng. G4ED	Fitting Position:for cylinder 1, Fitting Position:for cylinder 4, x 1, D.I.S.						9.6482	C10		
Eng. G4ED-G							9.6482, 9.6484	C10		4.7111
Eng. G4ED	Fitting Position:for cylinder 2, Fitting Position:for cylinder 3, x 1, D.I.S.						9.6484	C10		
Eng. G4ED-G	Kit						9.6486	C10		

				ENGINE
1.6	Petrol	78	06/05-06/09	G4ED, G4ED-G

Engine	Information	A10	A20	A40	A50	A70	C10 - C30		C20	E01
Eng. G4ED	Fitting Position:for cylinder 1, Fitting Position:for cylinder 4, x 1, D.I.S.						9.6482	C10		
Eng. G4ED-G							9.6482, 9.6484	C10		4.7111
Eng. G4ED	Fitting Position:for cylinder 2, Fitting Position:for cylinder 3, x 1, D.I.S.						9.6484	C10		
Eng. G4ED-G	Kit						9.6486	C10		

GRAND SANTA FE

				ENGINE
3.0 GDi Trazione integrale	Petrol	183	07/13->	G6DG

Engine	Information	A10	A20	A40	A50	A70	C10 - C30		C20	E01
All engines	x 6, COIL ON PLUG						9.6392	C10		

A10	CONDENSER	A20	CONTACT SET	A40	DISTRIBUTOR CAP	A50	ROTOR	A70	PICK-UP
C10	COIL	C20	IGNITION MODULE	C30	ELECTRONIC IGNITION KIT	E01	IGNITION CABLE SET		

The present application list is a brief version. For the detailed information about the possibility of installation on a specific vehicle, please refer to our web-catalogue http://catalogo.facet.eu/

Vehicle	alim.	kW	Date	Engine	FUNCTIONS ON THE VEHICLE A10	A20	A40	A50	A70	C10 - C30	C20	E01
3.3	Petrol	183	01/14->	G6DF								
Engine: All engines	Information: x 6, COIL ON PLUG									9.6392 C10		
3.3 Trazione integrale	Petrol	199	02/14->	G6DF								
Engine: All engines	Information: x 6, COIL ON PLUG									9.6392 C10		
GRANDEUR												
2.4	Petrol	132	07/11->	G4KE								
Engine: All engines	Information: Grandeur, x 4, COIL ON PLUG									9.6456 C10		
3.3	Petrol	173	04/05-12/10	G6DB								
Engine: All engines	Information: Grandeur, x 6, COIL ON PLUG									9.6392 C10		
3.3	Petrol	191	11/10-12/11	G6DB								
Engine: All engines	Information: Grandeur, x 6, COIL ON PLUG									9.6392 C10		
H1												
2.4 CVVT	Petrol	127	01/10->	G4KC								
Engine: All engines	Information: x 4, COIL ON PLUG									9.6456 C10		
H-1 I												
2.4	Petrol	101	02/03-04/04	G4JS								
Engine: All engines	Information:											4.7241
2.4	Petrol	107	11/01-04/04	G4JS								
Engine: All engines	Information:											4.7241
2.4	Petrol	82	06/97-04/04	G4CS								
Engine: All engines	Information: version Mitsubishi						2.8303/1	3.8331/7				
2.4 4WD	Petrol	82	02/98-04/04	G4CS								
Engine: All engines	Information: version Mitsubishi						2.8303/1	3.8331/7				
H-1 II												
2.4	Petrol	129	02/08->	--, G4KC								
Engine: Eng. --	Information: Qty: 4									9.6456 C10		
Engine: Eng. G4KC	Information: x 4, COIL ON PLUG									9.6456 C10		
2.4 i	Petrol	129	02/08->	G4KC								
Engine: All engines	Information: x 4, COIL ON PLUG									9.6456 C10		
H100												
2.4	Petrol	82	10/97-12/04	G4CS								
Engine: All engines	Information: ->year 15/03/96, version Mitsubishi						2.8303/1	3.8331/7				

A10	CONDENSER	A20	CONTACT SET	A40	DISTRIBUTOR CAP	A50	ROTOR	A70	PICK-UP
C10	COIL	C20	IGNITION MODULE	C30	ELECTRONIC IGNITION KIT	E01	IGNITION CABLE SET		

The present application list is a brief version. For the detailed information about the possibility of installation on a specific vehicle, please refer to our web-catalogue http://catalogo.facet.eu/

Vehicle	alim.	kW	Date	Engine	FUNCTIONS ON THE VEHICLE							
					A10	A20	A40	A50	A70	C10 - C30	C20	E01
2.4	Petrol	84	05/96-03/00	G4CS								
Engine: All engines — Information: ->year 15/03/96, version Mitsubishi							2.8303/1	3.8331/7				
2.4	Petrol	90	07/93-03/00	G4CS								
Engine: All engines — Information: ->year 15/03/96, version Mitsubishi							2.8303/1	3.8331/7				
HIGHWAY VAN												
2.0 16V	Petrol	100	03/00-03/04	G4JP								
Engine: All engines												4.7241
I10 I												
1.0	Petrol	51	01/11-12/17	G3LA								
Engine: All engines — Information: x 3, COIL ON PLUG										9.6514 C10		
1.1	Petrol	48	12/07-12/13	G4HG								
Engine: All engines — Information: Fitting Position:for cylinder 1, Fitting Position:for cylinder 2, Fitting Position:for cylinder 3, Fitting Position:for cylinder 4, x 1, D.I.S.										9.6396 C10		
Engine: All engines												4.7235
1.1	Petrol	49	01/08-12/13	G4HG								
Engine: All engines — Information: Fitting Position:for cylinder 1, Fitting Position:for cylinder 2, Fitting Position:for cylinder 3, Fitting Position:for cylinder 4, x 1, D.I.S.										9.6396 C10		
Engine: All engines												4.7235
1.1	Petrol	50	11/08-12/13	G4HG								
Engine: All engines — Information: Fitting Position:for cylinder 1, Fitting Position:for cylinder 2, Fitting Position:for cylinder 3, Fitting Position:for cylinder 4, x 1, D.I.S.										9.6396 C10		
Engine: All engines												4.7235
1.1	Petrol	51	04/11-12/13	G4HG								
Engine: All engines — Information: Fitting Position:for cylinder 1, Fitting Position:for cylinder 2, Fitting Position:for cylinder 3, Fitting Position:for cylinder 4, x 1, D.I.S.										9.6396 C10		
Engine: All engines												4.7235
1.1 LPG	Petrol/ Liquified Petroleum Gas (LPG)	48	01/09-12/13	G4HG								
Engine: All engines — Information: Fitting Position:for cylinder 1, Fitting Position:for cylinder 2, Fitting Position:for cylinder 3, Fitting Position:for cylinder 4, x 1, D.I.S.										9.6396 C10		
1.1 LPG	Petrol/ Liquified Petroleum Gas (LPG)	51	04/11-12/13	G4HG								
Engine: All engines — Information: Fitting Position:for cylinder 1-4, Fitting Position:for cylinder 2, Fitting Position:for cylinder 3, x 1, D.I.S., x 1, D.I.S.										9.6396 C10		
1.2	Petrol	57	11/08-12/11	G4LA								
Engine: All engines — Information: Fitting Position:for cylinder 1-2, Fitting Position:for cylinder 3-4, x 1, D.I.S.										9.6479 C10		
Engine: All engines												4.7255

A10	CONDENSER	A20	CONTACT SET	A40	DISTRIBUTOR CAP	A50	ROTOR	A70	PICK-UP
C10	COIL	C20	IGNITION MODULE	C30	ELECTRONIC IGNITION KIT	E01	IGNITION CABLE SET		

The present application list is a brief version. For the detailed information about the possibility of installation on a specific vehicle, please refer to our web-catalogue http://catalogo.facet.eu/

Vehicle	alim.	kW	Date	Engine	FUNCTIONS ON THE VEHICLE: A10	A20	A40	A50	A70	C10 - C30	C20	E01
1.2	Petrol	63	04/11-12/13	G4LA								
All engines				Fitting Position:for cylinder 1-2, Fitting Position:for cylinder 3-4, x 1, D.I.S.						9.6479 C10		
All engines												4.7255
1.2	Petrol	64	12/15->	G4LA								
All engines				Fitting Position:for cylinder 1-2, Fitting Position:for cylinder 3-4, x 1, D.I.S.						9.6479 C10		
1.2 LPG	Petrol/ Liquified Petro-leum Gas (LPG)	57	01/10-12/13	G4LA								
All engines				Fitting Position:for cylinder 1-2, Fitting Position:for cylinder 2, Fitting Position:for cylinder 3, x 1, D.I.S., Fitting Position:for cylinder 4, x 1, D.I.S.						9.6479 C10		
I10 II												
1.0	Petrol	49	08/13->	G3LA								
All engines				x 3, COIL ON PLUG						9.6514 C10		
1.0 LPG	Petrol/ Liquified Petro-leum Gas (LPG)	49	02/14->	B3LA								
All engines				x 3, COIL ON PLUG						9.6514 C10		
1.0 LPG	Petrol/ Liquified Petro-leum Gas (LPG)	51	07/14-08/16	B3LA								
All engines				x 3, COIL ON PLUG						9.6514 C10		
1.2	Petrol	64	12/13->	G4LA								
All engines				x 1, COIL ON PLUG						9.6479 C10		
All engines												4.7255
I20 I												
1.2	Petrol	56	12/08-08/14	G4AG								
All engines				x 1, D.I.S.						9.6479 C10		
1.2	Petrol	57	09/08-12/12	G4LA								
All engines				x 1, D.I.S.						9.6479 C10		
All engines				-start-stop function								4.7255
1.2	Petrol	63	03/12-12/15	G4LA								
All engines				Fitting Position:for cylinder 1-2, Fitting Position:for cylinder 3-4, x 4, COIL ON PLUG, x 1, D.I.S., incl. spark plug connector						9.6479 C10		
All engines				x 4, +start-stop function, COIL ON PLUG, incl. spark plug connector						9.6512 C10		
All engines				-start-stop function								4.7255

A10	CONDENSER	A20	CONTACT SET	A40	DISTRIBUTOR CAP	A50	ROTOR	A70	PICK-UP
C10	COIL	C20	IGNITION MODULE	C30	ELECTRONIC IGNITION KIT	E01	IGNITION CABLE SET		

The present application list is a brief version. For the detailed information about the possibility of installation on a specific vehicle, please refer to our web-catalogue http://catalogo.facet.eu/

Vehicle	alim.	kW	Date	Engine	FUNCTIONS ON THE VEHICLE A10	A20	A40	A50	A70	C10 - C30	C20	E01
1.2 LPG	Petrol/ Liquified Petro-leum Gas (LPG)	60	01/09-08/14	**G4LA**								

Engine	Information	A10	A20	A40	A50	A70	C10 - C30		C20	E01
All engines	Fitting Position:for cylinder 1-2, Fitting Position:for cylinder 3-4, x 1, D.I.S.						9.6479	C10		

1.4	Petrol	74	09/08-12/15	**G4FA**

Engine	Information	A10	A20	A40	A50	A70	C10 - C30		C20	E01
All engines	x 4, COIL ON PLUG						9.6443	C10		

1.4 LPG	Petrol/ Liquified Petro-leum Gas (LPG)	75	12/08-12/12	**G4FA**

Engine	Information	A10	A20	A40	A50	A70	C10 - C30		C20	E01
All engines	x 4, COIL ON PLUG						9.6443	C10		

1.6	Petrol	93	09/08-12/12	**G4FC**

Engine	Information	A10	A20	A40	A50	A70	C10 - C30		C20	E01
All engines	x 4, COIL ON PLUG						9.6443	C10		

I20 II

1.0 T-GDI	Petrol	74	09/15->	**G3LC**

Engine	Information	A10	A20	A40	A50	A70	C10 - C30		C20	E01
All engines	x 3, COIL ON PLUG						9.6538	C10		

1.0 T-GDI	Petrol	88	09/15->	**G3LC**

Engine	Information	A10	A20	A40	A50	A70	C10 - C30		C20	E01
All engines	x 3, COIL ON PLUG						9.6538	C10		

1.2	Petrol	55	11/14->	**G4LA**

Engine	Information	A10	A20	A40	A50	A70	C10 - C30		C20	E01
All engines	x 4, Fitting Position:for cylinder 1-2, Fitting Position:for cylinder 3-4, -start-stop function, COIL ON PLUG, x 1, -start-stop function, D.I.S.						9.6479	C10		
All engines	x 4, +start-stop function, COIL ON PLUG, incl. spark plug connector						9.6512	C10		
All engines	-start-stop function									4.7255

1.2	Petrol	62	11/14->	**G4LA**

Engine	Information	A10	A20	A40	A50	A70	C10 - C30		C20	E01
All engines	Qty: 2, -start-stop function						9.6479	C10		
All engines	x 4, Fitting Position:for cylinder 1-2, Fitting Position:for cylinder 3-4, -start-stop function, COIL ON PLUG, x 1, -start-stop function, D.I.S.						9.6479	C10		
All engines	+start-stop function, Qty: 4						9.6512	C10		
All engines	x 4, +start-stop function, COIL ON PLUG, incl. spark plug connector						9.6512	C10		
All engines	-start-stop function									4.7255

1.2 LPG	Petrol/ Liquified Petro-leum Gas (LPG)	55	01/19->	**G4LA**

Engine	Information	A10	A20	A40	A50	A70	C10 - C30		C20	E01
All engines	x 4, COIL ON PLUG, incl. spark plug connector						9.6512	C10		

1.2 LPGI	Petrol/ Liquified Petro-leum Gas (LPG)	61	11/14->	**G4LA**

Engine	Information	A10	A20	A40	A50	A70	C10 - C30		C20	E01
All engines	x 4, Fitting Position:for cylinder 1-2, Fitting Position:for cylinder 3-4, -start-stop function, COIL ON PLUG, x 1, -start-stop function, D.I.S.						9.6479	C10		

A10	CONDENSER	**A20**	CONTACT SET	**A40**	DISTRIBUTOR CAP	**A50**	ROTOR	**A70**	PICK-UP
C10	COIL	**C20**	IGNITION MODULE	**C30**	ELECTRONIC IGNITION KIT	**E01**	IGNITION CABLE SET		

The present application list is a brief version. For the detailed information about the possibility of installation on a specific vehicle, please refer to our web-catalogue http://catalogo.facet.eu/

Vehicle	alim.	kW	Date	Engine	FUNCTIONS ON THE VEHICLE A10	A20	A40	A50	A70	C10 - C30	C20	E01
1.2 LPGI	Petrol/ Liquified Petro-leum Gas (LPG)	61	11/14->	**G4LA**								

Engine	Information	A10	A20	A40	A50	A70	C10 - C30		C20	E01
All engines	x 4, +start-stop function, COIL ON PLUG, incl. spark plug connector						9.6512	C10		

1.2 MPI	Petrol	55	05/15->	**G4LA**

Engine	Information	A10	A20	A40	A50	A70	C10 - C30		C20	E01
All engines	x 4, Fitting Position:for cylinder 1-2, Fitting Position:for cylinder 3-4, -start-stop function, COIL ON PLUG, x 1, -start-stop function, D.I.S.						9.6479	C10		
All engines	x 4, +start-stop function, COIL ON PLUG, incl. spark plug connector						9.6512	C10		

1.2 MPI	Petrol	62	05/15->	**G4LA**

Engine	Information	A10	A20	A40	A50	A70	C10 - C30		C20	E01
All engines	x 4, Fitting Position:for cylinder 1-2, Fitting Position:for cylinder 3-4, -start-stop function, COIL ON PLUG, x 1, -start-stop function, D.I.S.						9.6479	C10		
All engines	x 4, +start-stop function, COIL ON PLUG, incl. spark plug connector						9.6512	C10		

1.4	Petrol	74	11/14->	**G4LC**

Engine	Information	A10	A20	A40	A50	A70	C10 - C30		C20	E01
All engines	x 4, COIL ON PLUG						9.6522	C10		

1.4 MPi	Petrol	74	05/15->	**G4LC**

Engine	Information	A10	A20	A40	A50	A70	C10 - C30		C20	E01
All engines	x 4, COIL ON PLUG						9.6522	C10		

I30 I

1.4	Petrol	77	10/07-06/12	**G4FA**

Engine	Information	A10	A20	A40	A50	A70	C10 - C30		C20	E01
All engines	->year 01/11/08, MADE BY: (ROK), MADE BY: (CZ), x 4, COIL ON PLUG, x 4, COIL ON PLUG ---------- MADE BY: (ROK), x 4, COIL ON PLUG						9.6395	C10		
All engines	01/12/08 ->, MADE BY: (CZ), MADE BY: (CZ), x 4, COIL ON PLUG, x 4, COIL ON PLUG						9.6443	C10		

1.4	Petrol	80	10/07-06/12	**G4FA**

Engine	Information	A10	A20	A40	A50	A70	C10 - C30		C20	E01
All engines	->year 01/11/08, MADE BY: (ROK), MADE BY: (CZ), x 4, COIL ON PLUG, x 4, COIL ON PLUG ---------- MADE BY: (ROK), x 4, COIL ON PLUG						9.6395	C10		
All engines	01/12/08 ->, MADE BY: (CZ), MADE BY: (CZ), x 4, COIL ON PLUG, x 4, COIL ON PLUG						9.6443	C10		

1.4 LPG	Petrol/ Liquified Petro-leum Gas (LPG)	80	01/09-06/12	**G4FA**

Engine	Information	A10	A20	A40	A50	A70	C10 - C30		C20	E01
All engines	MADE BY: (ROK), x 4, COIL ON PLUG						9.6395	C10		
All engines	MADE BY: (CZ), x 4, COIL ON PLUG						9.6443	C10		

1.6	Petrol	85	10/07-06/12	**G4FC**

Engine	Information	A10	A20	A40	A50	A70	C10 - C30		C20	E01
All engines	->year 01/11/08, MADE BY: (CZ), x 4, COIL ON PLUG ---------- MADE BY: (ROK), x 4, COIL ON PLUG						9.6395	C10		
All engines	01/12/08 ->, MADE BY: (CZ), x 4, COIL ON PLUG						9.6443	C10		

1.6	Petrol	90	10/07-06/12	**G4FC**

Engine	Information	A10	A20	A40	A50	A70	C10 - C30		C20	E01
All engines	->year 01/11/08, MADE BY: (CZ), x 4, COIL ON PLUG ---------- MADE BY: (ROK), x 4, COIL ON PLUG						9.6395	C10		
All engines	01/12/08 ->, MADE BY: (CZ), x 4, COIL ON PLUG						9.6443	C10		

A10	CONDENSER	**A20**	CONTACT SET	**A40**	DISTRIBUTOR CAP	**A50**	ROTOR	**A70**	PICK-UP
C10	COIL	**C20**	IGNITION MODULE	**C30**	ELECTRONIC IGNITION KIT	**E01**	IGNITION CABLE SET		

The present application list is a brief version. For the detailed information about the possibility of installation on a specific vehicle, please refer to our web-catalogue http://catalogo.facet.eu/

Vehicle	alim.	kW	Date	Engine	FUNCTIONS ON THE VEHICLE: A10	A20	A40	A50	A70	C10 - C30	C20	E01
1.6	Petrol	93	02/08-06/12	G4FC								

Engine	Information	A10	A20	A40	A50	A70	C10 - C30		C20	E01
All engines	->year 01/11/08, MADE BY: (CZ), x 4, COIL ON PLUG --- MADE BY: (ROK), x 4, COIL ON PLUG						9.6395	C10		
All engines	01/12/08 ->, MADE BY: (CZ), x 4, COIL ON PLUG						9.6443	C10		

2.0	Petrol	105	10/07-06/12	G4GC, G4GC-G

Engine	Information	A10	A20	A40	A50	A70	C10 - C30		C20	E01
Eng. G4GC	x 1, D.I.S.						9.6481	C10		
Eng. G4GC-G	Qty: 2						9.6481	C10		
All engines										4.9385

I30 II

1.4	Petrol	73	12/11->	G4FA

Engine	Information	A10	A20	A40	A50	A70	C10 - C30		C20	E01
All engines	x 4, COIL ON PLUG						9.6443	C10		

1.4	Petrol	74	12/14->	G4LC

Engine	Information	A10	A20	A40	A50	A70	C10 - C30		C20	E01
All engines	->year 01/12/14, x 4, COIL ON PLUG						9.6443	C10		
All engines	x 4, COIL ON PLUG, x 4, COIL ON PLUG						9.6522	C10		

1.4 LPG	Petrol/ Liquified Petro-leum Gas (LPG)	73	01/13->	G4FA

Engine	Information	A10	A20	A40	A50	A70	C10 - C30		C20	E01
All engines	x 4, COIL ON PLUG						9.6443	C10		

1.4 MPI	Petrol	74	05/15->	G4LC

Engine	Information	A10	A20	A40	A50	A70	C10 - C30		C20	E01
All engines	x 4, COIL ON PLUG						9.6522	C10		

1.6	Petrol	88	01/12->	G4FC, G4FG

Engine	Information	A10	A20	A40	A50	A70	C10 - C30		C20	E01
All engines	x 4, COIL ON PLUG						9.6443, 9.6511	C10		

1.6	Petrol	95	12/11-12/15	G4FC, G4FD, G4FG

Engine	Information	A10	A20	A40	A50	A70	C10 - C30		C20	E01
Eng. G4FG	no specific info conc. application available, Qty: 4						9.6443, 9.6511	C10		
Eng. G4FC, G4FD	x 4, COIL ON PLUG						9.6511	C10		

1.6	Petrol	96	06/14->	G4FC

Engine	Information	A10	A20	A40	A50	A70	C10 - C30		C20	E01
All engines	x 4, COIL ON PLUG						9.6443	C10		

1.6 GDI	Petrol	99	12/11->	G4FD

Engine	Information	A10	A20	A40	A50	A70	C10 - C30		C20	E01
All engines	x 4, COIL ON PLUG						9.6511	C10		

1.6 MPI	Petrol	88	11/16->	G4FC

Engine	Information	A10	A20	A40	A50	A70	C10 - C30		C20	E01
All engines	x 4, COIL ON PLUG						9.6443	C10		

1.6 MPI	Petrol	96	06/14->	G4FC

Engine	Information	A10	A20	A40	A50	A70	C10 - C30		C20	E01
All engines	x 4, COIL ON PLUG						9.6443	C10		

A10	CONDENSER	A20	CONTACT SET	A40	DISTRIBUTOR CAP	A50	ROTOR	A70	PICK-UP
C10	COIL	C20	IGNITION MODULE	C30	ELECTRONIC IGNITION KIT	E01	IGNITION CABLE SET		

The present application list is a brief version. For the detailed information about the possibility of installation on a specific vehicle, please refer to our web-catalogue http://catalogo.facet.eu/

Vehicle	alim.	kW	Date	Engine	FUNCTIONS ON THE VEHICLE: A10	A20	A40	A50	A70	C10 - C30	C20	E01
I30 III												
1.0 T-GDi	Petrol	88	11/16->	G3LC						9.6538 C10		
Engine: All engines — Information: x 3, COIL ON PLUG												
1.4 MPI	Petrol	73	05/17->	G4LC						9.6522 C10		
Engine: All engines — Information: x 4, COIL ON PLUG												
1.4 MPI	Petrol	74	11/16->	G4LC						9.6522 C10		
Engine: All engines — Information: x 4, COIL ON PLUG												
I40												
1.6 GDI	Petrol	99	07/11->	G4FD						9.6511 C10		
Engine: All engines — Information: x 4, COIL ON PLUG												
INNOVATION												
3.0 V6	Petrol	104	05/00->	G6AT								
Engine: All engines — Information:							2.8322/16					
Engine: All engines — Information: version Mitsubishi								3.8331/9				
IONIQ												
1.6 GDI Hybrid	Petrol/ Electric	104	03/16->	G4LE						9.6547 C10		
Engine: All engines — Information: x 4, COIL ON PLUG												
1.6 GDI Hybrid	Petrol/ Electric	77	03/16->	G4LE						9.6547 C10		
Engine: All engines — Information: x 4, COIL ON PLUG												
1.6 GDI Plug-in Hybrid	Petrol/ Electric	77	03/16->	G4LE						9.6547 C10		
Engine: All engines — Information: x 4, COIL ON PLUG												
IX20												
1.4	Petrol	66	11/10->	G4FA						9.6443 C10		
Engine: All engines — Information: x 4, COIL ON PLUG												
1.4	Petrol	74	11/10->	G4FA						9.6443 C10		
Engine: All engines — Information: x 4, COIL ON PLUG												
1.4 LPG	Petrol/ Liquified Petro-leum Gas (LPG)	66	11/10->	G4FA						9.6443 C10		
Engine: All engines — Information: x 4, COIL ON PLUG												
1.6	Petrol	92	11/10->	G4FC						9.6443 C10		
Engine: All engines — Information: x 4, COIL ON PLUG												

A10	CONDENSER	**A20**	CONTACT SET	**A40**	DISTRIBUTOR CAP	**A50**	ROTOR	**A70**	PICK-UP
C10	COIL	**C20**	IGNITION MODULE	**C30**	ELECTRONIC IGNITION KIT	**E01**	IGNITION CABLE SET		

The present application list is a brief version. For the detailed information about the possibility of installation on a specific vehicle, please refer to our web-catalogue http://catalogo.facet.eu/

Vehicle	alim.	kW	Date	Engine	FUNCTIONS ON THE VEHICLE A10	A20	A40	A50	A70	C10 - C30	C20	E01
				ENGINE								
1.6 LPG	Petrol/ Liquified Petro-leum Gas (LPG)	92	11/10->	G4FC								
Engine	Information				A10	A20	A40	A50	A70	C10 - C30		C20	E01
All engines	x 4, COIL ON PLUG									9.6443	C10		
IX35													
				ENGINE								
1.6	Petrol	99	11/10->	G4FD								
Engine	Information				A10	A20	A40	A50	A70	C10 - C30		C20	E01
All engines	x 4, COIL ON PLUG									9.6511	C10		
				ENGINE								
2.0	Petrol	120	01/10-07/13	G4KD								
Engine	Information				A10	A20	A40	A50	A70	C10 - C30		C20	E01
All engines	x 4, COIL ON PLUG									9.6456	C10		
				ENGINE								
2.0	Petrol	122	01/10->	G4KD								
Engine	Information				A10	A20	A40	A50	A70	C10 - C30		C20	E01
All engines	x 4, COIL ON PLUG									9.6456	C10		
				ENGINE								
2.0 4WD	Petrol	120	01/10->	G4KD								
Engine	Information				A10	A20	A40	A50	A70	C10 - C30		C20	E01
All engines	x 4, COIL ON PLUG									9.6456	C10		
				ENGINE								
2.0 CVVT	Petrol	110	08/09-07/13	G4KD								
Engine	Information				A10	A20	A40	A50	A70	C10 - C30		C20	E01
All engines	x 4, COIL ON PLUG									9.6456	C10		
				ENGINE								
2.0 CVVT AWD	Petrol	110	08/09-07/13	G4KD								
Engine	Information				A10	A20	A40	A50	A70	C10 - C30		C20	E01
All engines	x 4, COIL ON PLUG									9.6456	C10		
				ENGINE								
2.4 DCVVT-I 4WD	Petrol	128	07/10-12/13	G4KE								
Engine	Information				A10	A20	A40	A50	A70	C10 - C30		C20	E01
All engines	Qty: 4									9.6456	C10		
				ENGINE								
2.4 GDi 4WD	Petrol	136	01/13->	G4KJ								
Engine	Information				A10	A20	A40	A50	A70	C10 - C30		C20	E01
All engines	Qty: 4									9.6456	C10		
				ENGINE								
GDi	Petrol	99	05/15-12/15	G4FD								
Engine	Information				A10	A20	A40	A50	A70	C10 - C30		C20	E01
All engines	x 4, COIL ON PLUG									9.6511	C10		
IX55													
				ENGINE								
3.8 V6	Petrol	194	01/11->	G6DA								
Engine	Information				A10	A20	A40	A50	A70	C10 - C30		C20	E01
All engines	Qty: 6									9.6392	C10		
				ENGINE								
3.8 V6 4WD	Petrol	191	01/07->	G6DA								
Engine	Information				A10	A20	A40	A50	A70	C10 - C30		C20	E01
All engines	x 6, COIL ON PLUG									9.6392	C10		
KONA													
				ENGINE								
1.0 T-GDi	Petrol	88	07/17->	G3LC								
Engine	Information				A10	A20	A40	A50	A70	C10 - C30		C20	E01
All engines	x 3, COIL ON PLUG									9.6538	C10		

A10	CONDENSER	A20	CONTACT SET	A40	DISTRIBUTOR CAP	A50	ROTOR	A70	PICK-UP
C10	COIL	C20	IGNITION MODULE	C30	ELECTRONIC IGNITION KIT	E01	IGNITION CABLE SET		

The present application list is a brief version. For the detailed information about the possibility of installation on a specific vehicle, please refer to our web-catalogue http://catalogo.facet.eu/

Vehicle	alim.	kW	Date	Engine	FUNCTIONS ON THE VEHICLE A10	A20	A40	A50	A70	C10 - C30	C20	E01
1.6 GDi Hybrid	Petrol/ Electric	77	06/19->	G4LE								

Engine	Information	A10	A20	A40	A50	A70	C10 - C30	C20	E01
All engines	x 4, COIL ON PLUG						9.6547 C10		

LANTRA

1.8	Petrol	97	06/00->	G4GB

Engine	Information	A10	A20	A40	A50	A70	C10 - C30	C20	E01
All engines	01/09/02 ->, Qty: 2						9.6481 C10		
All engines									4.9385

2.0	Petrol	102	06/00->	G4GC-G

Engine	Information	A10	A20	A40	A50	A70	C10 - C30	C20	E01
All engines	01/09/02 ->, Qty: 2						9.6481 C10		
All engines									4.9385

LANTRA I

1.5	Petrol	53	10/90-04/95	G4DJ

Engine	Information	A10	A20	A40	A50	A70	C10 - C30	C20	E01
All engines	version Mitsubishi			2.8303/1	3.8323				

1.5 i.e.	Petrol	63	10/90-11/95	G4DJ

Engine	Information	A10	A20	A40	A50	A70	C10 - C30	C20	E01
All engines	SOHC/OHC, version Mitsubishi			2.8303/1	3.8331/7				
All engines	DOHC								4.9401

1.6 i.e. 16V	Petrol	78	10/90-11/95	G4CR

Engine	Information	A10	A20	A40	A50	A70	C10 - C30	C20	E01
All engines									4.9401

1.6 i.e. 16V	Petrol	84	10/90-11/95	G4CR

Engine	Information	A10	A20	A40	A50	A70	C10 - C30	C20	E01
All engines									4.9401

1.8 i.e. 16V	Petrol	93	10/90-11/95	G4CN

Engine	Information	A10	A20	A40	A50	A70	C10 - C30	C20	E01
All engines									4.9401

LANTRA II

1.5 12V	Petrol	65	12/96-10/00	G4EK

Engine	Information	A10	A20	A40	A50	A70	C10 - C30	C20	E01
All engines									4.7119

1.6 16V	Petrol	84	11/95-10/00	4G61

Engine	Information	A10	A20	A40	A50	A70	C10 - C30	C20	E01
All engines									4.9385

1.6 i	Petrol	66	11/95-10/00	G4GR

Engine	Information	A10	A20	A40	A50	A70	C10 - C30	C20	E01
All engines									4.9385

1.8 16V	Petrol	94	11/95-10/00	G4GM

Engine	Information	A10	A20	A40	A50	A70	C10 - C30	C20	E01
All engines									4.9385

2.0 16V	Petrol	102	11/95-10/00	G4GF

Engine	Information	A10	A20	A40	A50	A70	C10 - C30	C20	E01
All engines									4.9385

A10	CONDENSER	A20	CONTACT SET	A40	DISTRIBUTOR CAP	A50	ROTOR	A70	PICK-UP
C10	COIL	C20	IGNITION MODULE	C30	ELECTRONIC IGNITION KIT	E01	IGNITION CABLE SET		

The present application list is a brief version. For the detailed information about the possibility of installation on a specific vehicle, please refer to our web-catalogue http://catalogo.facet.eu/

Vehicle	alim.	kW	Date	Engine	FUNCTIONS ON THE VEHICLE: A10	A20	A40	A50	A70	C10 - C30	C20	E01

MATRIX

1.6	Petrol	66	01/02-12/05	ENGINE: G4ED-L

Engine	Information	A10	A20	A40	A50	A70	C10 - C30		C20	E01
All engines							9.6482, 9.6484	C10		4.7111
All engines	Kit						9.6486	C10		

1.6	Petrol	76	06/01-08/10	ENGINE: G4ED, G4ED-G

Engine	Information	A10	A20	A40	A50	A70	C10 - C30		C20	E01
Eng. G4ED	x 1, D.I.S.						9.6482	C10		
Eng. G4ED-G							9.6482, 9.6484	C10		4.7111
Eng. G4ED-G	Kit						9.6486	C10		

1.6 [TUR]	Petrol	76	04/08->	ENGINE: G4ED

Engine	Information	A10	A20	A40	A50	A70	C10 - C30		C20	E01
All engines							9.6482, 9.6484	C10		4.7111
All engines	Kit						9.6486	C10		

1.8	Petrol	90	06/01-08/10	ENGINE: G4GB, G4GB-G

Engine	Information	A10	A20	A40	A50	A70	C10 - C30		C20	E01
Eng. G4GB	01/10/02 ->, x 1, D.I.S.						9.6481	C10		
Eng. G4GB-G	01/09/02 ->, Qty: 2						9.6481	C10		
Eng. G4GB-G										4.9385

1.8 [TUR]	Petrol	90	04/08->	ENGINE: G4GB

Engine	Information	A10	A20	A40	A50	A70	C10 - C30		C20	E01
All engines	Qty: 2						9.6481	C10		
All engines										4.9385

NF

2.0 CVVT	Petrol	111	05/05-12/10	ENGINE: G4BPE

Engine	Information	A10	A20	A40	A50	A70	C10 - C30		C20	E01
All engines	NF, ->year 01/12/07, x 4, COIL ON PLUG						9.6392	C10		
All engines	NF, 01/01/08 ->, x 4, COIL ON PLUG						9.6456	C10		

PONY

1.3	Petrol	43	10/89-01/95	ENGINE: G4DG

Engine	Information	A10	A20	A40	A50	A70	C10 - C30		C20	E01
All engines	version Mitsubishi			2.8303/1	3.8323					

1.3	Petrol	49	10/89-01/95	ENGINE: G4DG

Engine	Information	A10	A20	A40	A50	A70	C10 - C30		C20	E01
All engines	version Mitsubishi			2.8303/1	3.8323					

1.3	Petrol	50	10/85-09/89	ENGINE: G13B

Engine	Information	A10	A20	A40	A50	A70	C10 - C30		C20	E01
All engines	version Mitsubishi			2.8303/1	3.8323					

1.5	Petrol	53	10/85-01/95	ENGINE: G15B, G4DJ

Engine	Information	A10	A20	A40	A50	A70	C10 - C30		C20	E01
All engines	version Mitsubishi			2.8303/1	3.8323					

1.5 i	Petrol	61	10/89-01/95	ENGINE: G15B, G4DJ

Engine	Information	A10	A20	A40	A50	A70	C10 - C30		C20	E01
All engines	version Mitsubishi			2.8303/1	3.8331/7					

1.5 i	Petrol	62	10/89-01/95	ENGINE: G15B, G4DJ

Engine	Information	A10	A20	A40	A50	A70	C10 - C30		C20	E01
All engines	version Mitsubishi			2.8303/1	3.8331/7					

A10	CONDENSER	A20	CONTACT SET	A40	DISTRIBUTOR CAP	A50	ROTOR	A70	PICK-UP
C10	COIL	C20	IGNITION MODULE	C30	ELECTRONIC IGNITION KIT	E01	IGNITION CABLE SET		

The present application list is a brief version. For the detailed information about the possibility of installation on a specific vehicle, please refer to our web-catalogue http://catalogo.facet.eu/

Vehicle	alim.	kW	Date	Engine	FUNCTIONS ON THE VEHICLE							
					A10	A20	A40	A50	A70	C10 - C30	C20	E01

PONY / EXCEL

Vehicle	alim.	kW	Date	ENGINE
1.3	Petrol	48	12/92-09/94	G4DG

Engine	Information	A10	A20	A40	A50	A70	C10 - C30	C20	E01
All engines	version Mitsubishi			2.8303/1	3.8323				

Vehicle	alim.	kW	Date	ENGINE
1.3	Petrol	49	01/90-01/95	G4DG

Engine	Information	A10	A20	A40	A50	A70	C10 - C30	C20	E01
All engines	version Mitsubishi			2.8303/1	3.8323				

Vehicle	alim.	kW	Date	ENGINE
1.5	Petrol	53	01/90-01/95	G15B, G4DJ

Engine	Information	A10	A20	A40	A50	A70	C10 - C30	C20	E01
All engines	version Mitsubishi			2.8303/1	3.8323				

Vehicle	alim.	kW	Date	ENGINE
1.5 i	Petrol	61	01/90-01/95	G15B, G4DJ

Engine	Information	A10	A20	A40	A50	A70	C10 - C30	C20	E01
All engines	version Mitsubishi			2.8303/1	3.8331/7				

Vehicle	alim.	kW	Date	ENGINE
1.5 i	Petrol	62	01/90-01/95	G15B, G4DJ

Engine	Information	A10	A20	A40	A50	A70	C10 - C30	C20	E01
All engines	version Mitsubishi			2.8303/1	3.8331/7				

PORTER I

Vehicle	alim.	kW	Date	ENGINE
2.4	Petrol	82	03/96-04/04	G4CS

Engine	Information	A10	A20	A40	A50	A70	C10 - C30	C20	E01
All engines	version Mitsubishi			2.8303/1	3.8331/7				

PRECIS

Vehicle	alim.	kW	Date	ENGINE
1.5 i [USA]	Petrol	0	01/89->	G4DJ

Engine	Information	A10	A20	A40	A50	A70	C10 - C30	C20	E01
All engines	version Mitsubishi			2.8303/1	3.8331/7				

S COUPE

Vehicle	alim.	kW	Date	ENGINE
1.5 i	Petrol	62	02/90-05/96	G4DJ

Engine	Information	A10	A20	A40	A50	A70	C10 - C30	C20	E01
All engines	version Mitsubishi			2.8303/1	3.8331/7				

Vehicle	alim.	kW	Date	ENGINE
1.5 i	Petrol	65	04/92-05/96	G4EK

Engine	Information	A10	A20	A40	A50	A70	C10 - C30	C20	E01
All engines	->year 01/04/94, version Bosch			2.7524PHT	3.7573/21RS	8.2744			
All engines	01/04/94 ->								4.7119

Vehicle	alim.	kW	Date	ENGINE
1.5 i Turbo	Petrol	85	04/91-05/96	G4EK-TC

Engine	Information	A10	A20	A40	A50	A70	C10 - C30	C20	E01
All engines	->year 01/04/94, version Bosch			2.7524PHT	3.7573/21RS	8.2744			
All engines	01/04/94 ->								4.7119

SANTA FE I

Vehicle	alim.	kW	Date	ENGINE
2.0	Petrol	99	08/01-03/06	G4BP

Engine	Information	A10	A20	A40	A50	A70	C10 - C30	C20	E01
All engines									4.7241

Vehicle	alim.	kW	Date	ENGINE
2.4 16V	Petrol	100	02/01-03/06	G4JS-G

Engine	Information	A10	A20	A40	A50	A70	C10 - C30	C20	E01
All engines									4.7241

Vehicle	alim.	kW	Date	ENGINE
2.4 16V	Petrol	107	02/01-03/06	G4JS-G

Engine	Information	A10	A20	A40	A50	A70	C10 - C30	C20	E01
All engines									4.7241

A10	CONDENSER	A20	CONTACT SET	A40	DISTRIBUTOR CAP	A50	ROTOR	A70	PICK-UP
C10	COIL	C20	IGNITION MODULE	C30	ELECTRONIC IGNITION KIT	E01	IGNITION CABLE SET		

The present application list is a brief version. For the detailed information about the possibility of installation on a specific vehicle, please refer to our web-catalogue http://catalogo.facet.eu/

Vehicle	alim.	kW	Date	Engine	FUNCTIONS ON THE VEHICLE A10	A20	A40	A50	A70	C10 - C30	C20	E01
2.4 16V 4x4	Petrol	100	02/01-03/06	**G4JS-G**								
All engines												4.7241
2.4 16V 4x4	Petrol	107	02/01-03/06	**G4JS-G**								
All engines												4.7241
2.7 4x4	Petrol	129	09/02-12/04	**G6BA**								
All engines	FP: Centre, x 1, D.I.S.									9.6480 C10		
All engines	FP: Left, FP: Left Front, x 1, D.I.S.									9.6487 C10		
2.7 V6 4x4	Petrol	127	02/01-03/06	**G6BA, G6BA-G**								
Eng. G6BA	->year 01/10/01, x 3, D.I.S.									9.6479 C10		
Eng. G6BA-G	->year 15/11/01, Qty: 3									9.6479 C10		
Eng. G6BA	01/11/01 ->, FP: Centre, x 1, D.I.S.									9.6480 C10		
Eng. G6BA-G	15/11/01 ->, FP: Centre									9.6480 C10		
Eng. G6BA	01/11/01 ->, FP: Left, FP: Left Front, x 1, D.I.S.									9.6487 C10		
Eng. G6BA-G	15/11/01 ->, FP: Left, FP: Left Front									9.6487 C10		
Eng. G6BA-G												4.7236
SANTA FE II												
2.4	Petrol	128	11/10-12/12	**G4KE**								
All engines	x 4, COIL ON PLUG									9.6456 C10		
2.4 4x4	Petrol	128	07/10-12/12	**G4KE**								
All engines	x 4, COIL ON PLUG									9.6456 C10		
3.3	Petrol	180	07/07-11/08	**G6DB**								
All engines	Qty: 6									9.6392 C10		
3.3 Dynamic 4x4	Petrol	173	03/06-12/12	**G6DB**								
All engines	Qty: 6									9.6392 C10		
3.5	Petrol	147	01/10->	--								
All engines	Qty: 6									9.6392 C10		
3.5 4x4	Petrol	203	08/11-12/12	**G6DC**								
All engines	x 6, COIL ON PLUG									9.6392 C10		
3.5 4x4	Petrol	204	08/11-12/12	**G6DC**								
All engines	x 6, COIL ON PLUG									9.6392 C10		
SANTA FE III												
2.4	Petrol	141	09/12-12/15	**G4KJ**								
All engines	x 4, COIL ON PLUG									9.6456 C10		
2.4 4WD	Petrol	141	09/12->	**G4KJ**								
All engines	x 4, COIL ON PLUG									9.6456 C10		

A10	CONDENSER	**A20**	CONTACT SET	**A40**	DISTRIBUTOR CAP	**A50**	ROTOR	**A70**	PICK-UP
C10	COIL	**C20**	IGNITION MODULE	**C30**	ELECTRONIC IGNITION KIT	**E01**	IGNITION CABLE SET		

The present application list is a brief version. For the detailed information about the possibility of installation on a specific vehicle, please refer to our web-catalogue http://catalogo.facet.eu/

Vehicle	alim.	kW	Date	Engine	FUNCTIONS ON THE VEHICLE							
					A10	A20	A40	A50	A70	C10 - C30	C20	E01
2.4 CCVT	Petrol	126	07/18->	G4KE								
Engine: All engines — Information: x 4, COIL ON PLUG										9.6456 C10		
2.4 CCVT	Petrol	129	09/12->	G4KE								
Engine: All engines — Information: x 4, COIL ON PLUG										9.6456 C10		
2.4 CCVT AWD	Petrol	126	06/15->	G4KE								
Engine: All engines — Information: x 4, COIL ON PLUG										9.6456 C10		
2.4 CCVT AWD	Petrol	129	09/12->	G4KE								
Engine: All engines — Information: x 4, COIL ON PLUG										9.6456 C10		
2.4 GDI 4WD	Petrol	138	05/15->	G4KJ								
Engine: All engines — Information: ->year 01/01/17, euro 5, x 4, COIL ON PLUG										9.6456 C10		
SANTA FE IV												
2.4 AWD	Petrol	127	07/18->	G4KE								
Engine: All engines — Information: x 4, COIL ON PLUG										9.6456 C10		
2.4 GDI AWD	Petrol	138	07/18->	G4KJ								
Engine: All engines — Information: x 4, COIL ON PLUG										9.6456 C10		
3.5 MPI AWD	Petrol	183	07/19->	G6DC								
Engine: All engines — Information: x 6, COIL ON PLUG										9.6392 C10		
SANTAMO												
2.0 16V	Petrol	102	05/99-12/02	G4JP								
Engine: All engines — Information: SOHC/OHC, version Mitsubishi							2.8303/1	3.8331/7				
Engine: All engines — Information: DOHC												4.9401
2.0 16V 4x4	Petrol	102	05/99-12/02	G4CP-D								
Engine: All engines — Information: SOHC/OHC, version Mitsubishi							2.8303/1	3.8331/7				
Engine: All engines — Information: DOHC												4.9401
SANTRO												
1.1	Petrol	0	01/03->	G4HD								
Engine: All engines — Information: Qty: 2										9.6396 C10		
Engine: All engines — Information:												4.7119
SB 11												
1.4	Petrol	79	01/11->	--								
Engine: All engines — Information: Qty: 4										9.6443 C10		
1.6	Petrol	90	01/11->	--								
Engine: All engines — Information: Qty: 4										9.6443 C10		

A10	CONDENSER	A20	CONTACT SET	A40	DISTRIBUTOR CAP	A50	ROTOR	A70	PICK-UP
C10	COIL	C20	IGNITION MODULE	C30	ELECTRONIC IGNITION KIT	E01	IGNITION CABLE SET		

The present application list is a brief version. For the detailed information about the possibility of installation on a specific vehicle, please refer to our web-catalogue http://catalogo.facet.eu/

Vehicle	alim.	kW	Date	Engine	FUNCTIONS ON THE VEHICLE							
					A10	A20	A40	A50	A70	C10 - C30	C20	E01
SOLARIS												
1.4	Petrol	74	01/17->	G4LC						9.6522 C10		
1.4 16V	Petrol	79	01/11->	--						9.6443 C10		
1.4 VVTi	Petrol	79	11/10->	G4FA						9.6443 C10		
1.6	Petrol	90	01/17->	G4FG						9.6443 C10		
1.6 16V	Petrol	90	01/11->	--						9.6443 C10		
SONATA II												
2.0 i 16V	Petrol	96	01/91-10/93	G4CP-D								4.9401
2.4 i	Petrol	83	09/88-08/91	G4CS			2.8303/1	3.8331/7				
3.0 i V6 [USA]	Petrol	106	01/88->	G6AT				3.8331/9				
SONATA III												
1.8 GLS	Petrol	63	07/96-05/98	G4DM			2.8303/1	3.8331/7				
1.8 i	Petrol	72	05/93-06/98	G4CM			2.8303/1	3.8331/7				
2.0 i	Petrol	70	08/96-06/98	G4EP			2.8303/1	3.8331/7				
2.0 i	Petrol	77	06/94-08/96	G4CP			2.8303/1	3.8331/7				
2.0 i 16V	Petrol	102	05/93-06/98	G4CP-D								4.9401
2.0 i 16V	Petrol	92	06/96-06/98	G4CP-DM								4.9401

Engine	Information
All engines	Solaris, x 4, COIL ON PLUG
All engines	Qty: 4
All engines	Solaris, x 4, COIL ON PLUG
All engines	Solaris, x 4, COIL ON PLUG
All engines	Qty: 4
All engines	
All engines	version Mitsubishi
All engines	version Mitsubishi
All engines	version Mitsubishi
All engines	version Mitsubishi
All engines	version Mitsubishi
All engines	
All engines	

A10	CONDENSER	A20	CONTACT SET	A40	DISTRIBUTOR CAP	A50	ROTOR	A70	PICK-UP
C10	COIL	C20	IGNITION MODULE	C30	ELECTRONIC IGNITION KIT	E01	IGNITION CABLE SET		

The present application list is a brief version. For the detailed information about the possibility of installation on a specific vehicle, please refer to our web-catalogue http://catalogo.facet.eu/

Vehicle	alim.	kW	Date	Engine	FUNCTIONS ON THE VEHICLE A10	A20	A40	A50	A70	C10 - C30	C20	E01
3.0 i V6	Petrol	107	05/93-06/98	G6AT								
Engine: All engines — Information: version Mitsubishi								3.8331/9				
SONATA IV												
2.0 16V	Petrol	100	06/98-10/01	G4JP-G								
Engine: All engines												4.7241
2.0 16V	Petrol	96	10/01-11/04	G4JP-EG								
Engine: All engines												4.7241
2.4 16V	Petrol	105	03/98-10/01	G4BS								
Engine: All engines												4.7241
SONATA V												
2.0 [RUS]	Petrol	0	01/05-04/06	--								
Engine: All engines												4.7241
2.0 GLSI	Petrol	119	07/08-12/10	G4KD								
Engine: All engines — Information: x 4, COIL ON PLUG										9.6456 C10		
2.0 i [RUS]	Petrol	0	04/06-12/10	--								
Engine: All engines — Information: Qty: 2										9.6481 C10		
Engine: All engines												4.9385
2.0 VVTi GLS	Petrol	106	05/05-12/10	G4KA								
Engine: All engines — Information: ->year 01/12/07, x 4, COIL ON PLUG										9.6392 C10		
Engine: All engines — Information: 01/01/08 ->, x 4, COIL ON PLUG										9.6456 C10		
2.0 VVTi GLS	Petrol	121	01/08-12/10	G4KD								
Engine: All engines — Information: x 4, COIL ON PLUG										9.6456 C10		
2.4	Petrol	119	01/05-12/10	G4KC								
Engine: All engines — Information: ->year 01/11/07, x 4, COIL ON PLUG										9.6392 C10		
Engine: All engines — Information: 01/12/07 ->, x 4, COIL ON PLUG										9.6456 C10		
2.4	Petrol	125	06/08-12/09	G4KC								
Engine: All engines — Information: Qty: 4										9.6392 C10		
2.4	Petrol	128	06/08-12/10	G4KE								
Engine: All engines — Information: Qty: 4										9.6456 C10		
2.4	Petrol	132	11/07-12/10	G4KC								
Engine: All engines — Information: Qty: 4										9.6392 C10		
3.3	Petrol	171	01/05-12/10	G6DB								
Engine: All engines — Information: x 6, COIL ON PLUG										9.6392 C10		

A10	CONDENSER	A20	CONTACT SET	A40	DISTRIBUTOR CAP	A50	ROTOR	A70	PICK-UP
C10	COIL	C20	IGNITION MODULE	C30	ELECTRONIC IGNITION KIT	E01	IGNITION CABLE SET		

The present application list is a brief version. For the detailed information about the possibility of installation on a specific vehicle, please refer to our web-catalogue http://catalogo.facet.eu/

Vehicle	alim.	kW	Date	Engine	FUNCTIONS ON THE VEHICLE A10	A20	A40	A50	A70	C10 - C30	C20	E01
3.3	Petrol	173	06/05-12/10	G6DB						9.6392 C10		
All engines	x 6, COIL ON PLUG											
3.3	Petrol	184	01/08-12/10	G6DB						9.6392 C10		
All engines	x 6, COIL ON PLUG											
3.3	Petrol	186	09/07-12/08	G6DB						9.6392 C10		
All engines	x 6, COIL ON PLUG											
SONATA VI												
2.0	Petrol	110	06/09-06/14	G4KD						9.6456 C10		
All engines	x 4, COIL ON PLUG											
2.0 i	Petrol	121	01/11-06/14	G4KD						9.6456 C10		
All engines	Qty: 4											
2.4	Petrol	128	06/09-11/10	G4KC						9.6456 C10		
All engines	x 4, COIL ON PLUG											
2.4	Petrol	131	11/10-12/15	G4KC						9.6456 C10		
All engines	x 4, COIL ON PLUG											
SONICA												
3.3 CVVT	Petrol	186	03/09-12/10	G6DB						9.6392 C10		
All engines	Sonica, x 6, COIL ON PLUG											
STELLAR												
1.4	Petrol	50	10/83-08/86	4G33		1.5084	2.8303/1	3.8323				
All engines	version Mitsubishi											
1.6	Petrol	56	10/83-12/91	G32B		1.5084	2.8303/1	3.8323				
All engines	version Mitsubishi											
TIBURON												
1.6 i 16V	Petrol	79	08/00->	G4GL								4.9385
All engines												
1.6 i 16V	Petrol	84	08/99->	G4GR								4.9385
All engines												
2.0 i 16V	Petrol	101	08/99->	G4DF								4.9385
All engines												
TRAJET												
2.0	Petrol	100	03/00-07/08	G4JP-G						9.6481 C10		
All engines	01/02/04 ->, Qty: 2											

A10	CONDENSER	**A20**	CONTACT SET	**A40**	DISTRIBUTOR CAP	**A50**	ROTOR	**A70**	PICK-UP
C10	COIL	**C20**	IGNITION MODULE	**C30**	ELECTRONIC IGNITION KIT	**E01**	IGNITION CABLE SET		

The present application list is a brief version. For the detailed information about the possibility of installation on a specific vehicle, please refer to our web-catalogue http://catalogo.facet.eu/

Vehicle	alim.	kW	Date	Engine	FUNCTIONS ON THE VEHICLE							
					A10	A20	A40	A50	A70	C10 - C30	C20	E01
TRAJET												
2.0	Petrol	100	03/00-07/08	**G4JP-G**								
All engines			->year 01/02/04									4.7241
All engines			01/02/04 ->									4.9385
2.0	Petrol	103	01/04-07/08	**G4GC, G4GC-G**								
Eng. G4GC			01/03/04 ->, x 1, D.I.S.							9.6481 C10		
Eng. G4GC-G			01/02/04 ->, Qty: 2							9.6481 C10		
Eng. G4GC-G			->year 01/02/04									4.7241
Eng. G4GC-G			01/02/04 ->									4.9385
2.0	Petrol	104	11/03-07/08	**G4GC**								
All engines			01/03/04 ->, x 1, D.I.S.							9.6481 C10		
All engines			->year 01/02/04									4.7241
All engines			01/02/04 ->									4.9385
2.0 CRDi	Diesel	92	08/05-07/08	**D4EA**								
All engines			01/02/04 ->, Qty: 2							9.6481 C10		
All engines			->year 01/02/04									4.7241
All engines			01/02/04 ->									4.9385
CVVT	Petrol	103	01/04-07/08	**G4GC**								
All engines			01/03/04 ->, x 1, D.I.S.							9.6481 C10		
TUCSON												
1.6 GDi	Petrol	97	06/15-09/20	**G4FD**								
All engines			Tucson, x 4, COIL ON PLUG							9.6511 C10		
2.0	Petrol	104	08/04->	**G4GC**								
All engines			Tucson, x 1, D.I.S.							9.6481 C10		
All engines												4.9385
2.0	Petrol	105	01/07-01/12	**G4GC**								
All engines			Qty: 2							9.6481 C10		
All engines												4.9385
2.0 LPG	Petrol/ Liquified Petro-leum Gas (LPG)	104	06/04-03/10	**G4GC**								
All engines			Tucson, x 1, D.I.S.							9.6481 C10		
2.0 LPG Trazione integrale	Petrol/ Liquified Petro-leum Gas (LPG)	104	06/09-03/10	**G4GC**								
All engines			Tucson, x 1, D.I.S.							9.6481 C10		
2.0 Trazione inte-grale	Petrol	104	08/04-03/10	**G4GC**								
All engines			Tucson, x 1, D.I.S.							9.6481 C10		

A10	CONDENSER	**A20**	CONTACT SET	**A40**	DISTRIBUTOR CAP	**A50**	ROTOR	**A70**	PICK-UP
C10	COIL	**C20**	IGNITION MODULE	**C30**	ELECTRONIC IGNITION KIT	**E01**	IGNITION CABLE SET		

The present application list is a brief version. For the detailed information about the possibility of installation on a specific vehicle, please refer to our web-catalogue http://catalogo.facet.eu/

Vehicle	alim.	kW	Date	Engine	FUNCTIONS ON THE VEHICLE							
					A10	A20	A40	A50	A70	C10 - C30	C20	E01
2.0 Trazione integrale	Petrol	104	08/04-03/10	G4GC								
All engines												4.9385
2.0 Trazione integrale	Petrol	105	07/05-11/10	G4GC								
All engines	Qty: 2									9.6481 C10		
All engines												4.9385
2.7 Trazione integrale	Petrol	129	08/04-11/10	G6BA-G								
All engines	31/10/06 ->											4.7236
CVVT	Petrol	104	06/04-03/10	G4GC								
All engines	Tucson, x 1, D.I.S.									9.6481 C10		
VELOSTER												
1.6	Petrol	94	06/11->	G4FG								
All engines	Qty: 4									9.6443 C10		
1.6 GDI	Petrol	103	03/11-12/17	G4FD								
All engines	x 4, COIL ON PLUG									9.6511 C10		
1.6 GDi	Petrol	95	10/11-12/17	G4FD								
All engines	x 4, COIL ON PLUG									9.6511 C10		
1.6 MPI	Petrol	97	04/11-12/17	G4FC								
All engines	x 4, COIL ON PLUG									9.6443 C10		
VERNA I												
1.3	Petrol	63	09/99->	G4EA								
All engines										9.6482, 9.6483 C10		4.7119
All engines	Kit									9.6485 C10		
1.5	Petrol	66	09/99->	G4EB								
All engines										9.6482, 9.6483 C10		4.7119
All engines	Kit									9.6485 C10		
1.5	Petrol	75	09/99->	G4EC-G								
All engines										9.6482, 9.6484 C10		4.7111
All engines	Kit									9.6486 C10		
1.6	Petrol	77	12/02->	G4ED-G								
All engines										9.6482, 9.6484 C10		4.7111
All engines	Kit									9.6486 C10		

A10	CONDENSER	A20	CONTACT SET	A40	DISTRIBUTOR CAP	A50	ROTOR	A70	PICK-UP
C10	COIL	C20	IGNITION MODULE	C30	ELECTRONIC IGNITION KIT	E01	IGNITION CABLE SET		

The present application list is a brief version. For the detailed information about the possibility of installation on a specific vehicle, please refer to our web-catalogue http://catalogo.facet.eu/

Vehicle	alim.	kW	Date	Engine	FUNCTIONS ON THE VEHICLE							
					A10	A20	A40	A50	A70	C10 - C30	C20	E01

EX35

				ENGINE
3.5 V6	Petrol	221	04/08->	VQ35HR

Engine	Information	A10	A20	A40	A50	A70	C10 - C30		C20	E01
All engines	Qty: 6						9.6433	C10		

FX

				ENGINE
35	Petrol	205	07/08-10/09	VQ35HR

Engine	Information	A10	A20	A40	A50	A70	C10 - C30		C20	E01
All engines	FX35, x 6, COIL ON PLUG						9.6433	C10		

				ENGINE
35	Petrol	226	10/08-12/11	VQ35HR

Engine	Information	A10	A20	A40	A50	A70	C10 - C30		C20	E01
All engines	FX35, x 6, COIL ON PLUG						9.6433	C10		

				ENGINE
35 AWD	Petrol	205	07/08-05/09	VQ35HR

Engine	Information	A10	A20	A40	A50	A70	C10 - C30		C20	E01
All engines	FX35, x 6, COIL ON PLUG						9.6433	C10		

				ENGINE
35 AWD	Petrol	226	02/09-12/10	VQ35HR

Engine	Information	A10	A20	A40	A50	A70	C10 - C30		C20	E01
All engines	FX35, x 6, COIL ON PLUG						9.6433	C10		

				ENGINE
50 AWD	Petrol	287	10/08->	VK50VE

Engine	Information	A10	A20	A40	A50	A70	C10 - C30		C20	E01
All engines	FX50, ->year 01/12/10, x 8, COIL ON PLUG						9.6452	C10		

				ENGINE
50 AWD	Petrol	291	10/08->	VK50VE

Engine	Information	A10	A20	A40	A50	A70	C10 - C30		C20	E01
All engines	FX50, ->year 01/12/10, x 8, COIL ON PLUG						9.6452	C10		

				ENGINE
50 AWD	Petrol	309	06/13-07/13	VK50VE

Engine	Information	A10	A20	A40	A50	A70	C10 - C30		C20	E01
All engines	FX50, Fitting Position:for cylinder 1, Fitting Position:for cylinder 2, Fitting Position:for cylinder 3, Fitting Position:for cylinder 5, Fitting Position:for cylinder 6, Fitting Position:for cylinder 7, x 8, COIL ON PLUG						9.6452	C10		

G

				ENGINE
25	Petrol	163	01/11->	VQ25HR

Engine	Information	A10	A20	A40	A50	A70	C10 - C30		C20	E01
All engines	G25, x 6, COIL ON PLUG						9.6433	C10		

				ENGINE
35 X	Petrol	228	01/07-12/08	VQ35HR

Engine	Information	A10	A20	A40	A50	A70	C10 - C30		C20	E01
All engines	G35, x 6, COIL ON PLUG						9.6433	C10		

G SERIES

				ENGINE
3.5 V6	Petrol	228	12/06->	VQ35HR

Engine	Information	A10	A20	A40	A50	A70	C10 - C30		C20	E01
All engines	Qty: 6						9.6433	C10		

G20

				ENGINE
2.0	Petrol	85	01/90-12/97	SR20DE

Engine	Information	A10	A20	A40	A50	A70	C10 - C30		C20	E01
All engines	->year 31/12/93, version Hitachi			2.7973	3.7985					
All engines	01/01/94 ->, version Mitsubishi			2.8322/51	3.8331/36					

JX

				ENGINE
3.5 AWD	Petrol	195	11/12-09/13	VQ35DE

Engine	Information	A10	A20	A40	A50	A70	C10 - C30		C20	E01
All engines	JX35, x 6, COIL ON PLUG						9.6433	C10		

A10	CONDENSER	A20	CONTACT SET	A40	DISTRIBUTOR CAP	A50	ROTOR	A70	PICK-UP
C10	COIL	C20	IGNITION MODULE	C30	ELECTRONIC IGNITION KIT	E01	IGNITION CABLE SET		

The present application list is a brief version. For the detailed information about the possibility of installation on a specific vehicle, please refer to our web-catalogue http://catalogo.facet.eu/

Vehicle	alim.	kW	Date	Engine	FUNCTIONS ON THE VEHICLE							
					A10	A20	A40	A50	A70	C10 - C30	C20	E01

M

				ENGINE
25	Petrol	163	07/10->	VQ25HR

Engine	Information	A10	A20	A40	A50	A70	C10 - C30		C20	E01
All engines	M25, x 6, COIL ON PLUG						9.6433	C10		

				ENGINE
35h	Petrol/ Electric	225	04/11->	VQ35HR

Engine	Information	A10	A20	A40	A50	A70	C10 - C30		C20	E01
All engines	M35h, x 6, COIL ON PLUG						9.6433	C10		

				ENGINE
56	Petrol	300	03/10->	VK56VD

Engine	Information	A10	A20	A40	A50	A70	C10 - C30		C20	E01
All engines	M56, Fitting Position:for cylinder 1-6, x 8, COIL ON PLUG						9.6452	C10		

				ENGINE
56 X	Petrol	300	03/10->	VK56VD

Engine	Information	A10	A20	A40	A50	A70	C10 - C30		C20	E01
All engines	M56, Fitting Position:for cylinder 1, Fitting Position:for cylinder 2, Fitting Position:for cylinder 3, Fitting Position:for cylinder 5, Fitting Position:for cylinder 6, Fitting Position:for cylinder 7, x 8, COIL ON PLUG						9.6452	C10		

M35

				ENGINE
3.5	Petrol	226	09/08-12/10	VQ35HR

Engine	Information	A10	A20	A40	A50	A70	C10 - C30		C20	E01
All engines	x 6, COIL ON PLUG						9.6433	C10		

				ENGINE
3.5 h	Petrol/ Electric	268	01/10->	VQ35HR

Engine	Information	A10	A20	A40	A50	A70	C10 - C30		C20	E01
All engines	M35h, x 6, COIL ON PLUG						9.6433	C10		

				ENGINE
3.5 X	Petrol	226	09/08-12/10	VQ35HR

Engine	Information	A10	A20	A40	A50	A70	C10 - C30		C20	E01
All engines	x 6, COIL ON PLUG						9.6433	C10		

Q30

				ENGINE
2.0 T	Petrol	155	11/15->	270920

Engine	Information	A10	A20	A40	A50	A70	C10 - C30		C20	E01
All engines	x 4, COIL ON PLUG						9.6526	C10		

				ENGINE
2.0 T AWD	Petrol	155	11/15->	270920

Engine	Information	A10	A20	A40	A50	A70	C10 - C30		C20	E01
All engines	x 4, COIL ON PLUG						9.6526	C10		

Q50

				ENGINE
2.0 T	Petrol	155	04/14->	M 274

Engine	Information	A10	A20	A40	A50	A70	C10 - C30		C20	E01
All engines	x 4, COIL ON PLUG						9.6526	C10		

				ENGINE
50 Hybrid	Petrol/ Electric	219	06/13->	VQ35HR

Engine	Information	A10	A20	A40	A50	A70	C10 - C30		C20	E01
All engines	x 6, COIL ON PLUG						9.6433	C10		

				ENGINE
50 Hybrid	Petrol/ Electric	225	04/13->	VQ35HR

Engine	Information	A10	A20	A40	A50	A70	C10 - C30		C20	E01
All engines	x 6, COIL ON PLUG						9.6433	C10		

				ENGINE
50 Hybrid	Petrol/ Electric	268	04/13->	VQ35HR

Engine	Information	A10	A20	A40	A50	A70	C10 - C30		C20	E01
All engines	x 6, COIL ON PLUG						9.6433	C10		

A10	CONDENSER	A20	CONTACT SET	A40	DISTRIBUTOR CAP	A50	ROTOR	A70	PICK-UP
C10	COIL	C20	IGNITION MODULE	C30	ELECTRONIC IGNITION KIT	E01	IGNITION CABLE SET		

The present application list is a brief version. For the detailed information about the possibility of installation on a specific vehicle, please refer to our web-catalogue http://catalogo.facet.eu/

Vehicle	alim.	kW	Date	Engine	FUNCTIONS ON THE VEHICLE							
					A10	A20	A40	A50	A70	C10 - C30	C20	E01
50 Hybrid AWD	Petrol/ Electric	219	06/13->	VQ35HR						9.6433 C10		
50 Hybrid AWD	Petrol/ Electric	225	04/13->	VQ35HR						9.6433 C10		
50 Hybrid AWD	Petrol/ Electric	268	04/13->	VQ35HR						9.6433 C10		
Q60												
2.0 T	Petrol	155	09/16->	M 274						9.6526 C10		
Q70												
2.5	Petrol	163	05/15->	VQ25HR						9.6433 C10		
3.5 Hybrid	Petrol/ Electric	225	03/13->	VQ35HR						9.6433 C10		
5.6 AWD	Petrol	300	01/15->	VK56VD						9.6452 C10		
QX30												
2.0 AWD	Petrol	155	09/16->	270920						9.6526 C10		
QX50												
2.5 AWD	Petrol	163	02/14->	VQ25HR						9.6433 C10		
QX60												
3.5 AWD	Petrol	193	10/13->	VQ35DE						9.6433 C10		
QX70												
50 AWD	Petrol	287	08/13->	VK50VE						9.6452 C10		
50 AWD	Petrol	294	08/13->	VK50VE						9.6452 C10		

Engine	Information	A10	A20	A40	A50	A70	C10 - C30	C20	E01
All engines	x 6, COIL ON PLUG						9.6433 C10		
All engines	x 6, COIL ON PLUG						9.6433 C10		
All engines	x 6, COIL ON PLUG						9.6433 C10		
All engines	x 4, COIL ON PLUG						9.6526 C10		
All engines	x 6, COIL ON PLUG						9.6433 C10		
All engines	x 6, COIL ON PLUG						9.6433 C10		
All engines	Fitting Position:for cylinder 1, Fitting Position:for cylinder 2, Fitting Position:for cylinder 3, Fitting Position:for cylinder 5, Fitting Position:for cylinder 6, Fitting Position:for cylinder 7, x 6, COIL ON PLUG						9.6452 C10		
All engines	x 4, COIL ON PLUG						9.6526 C10		
All engines	x 6, COIL ON PLUG						9.6433 C10		
All engines	x 6, COIL ON PLUG						9.6433 C10		
All engines	x 8, COIL ON PLUG						9.6452 C10		
All engines	Fitting Position:for cylinder 1, Fitting Position:for cylinder 2, Fitting Position:for cylinder 3, Fitting Position:for cylinder 5, Fitting Position:for cylinder 6, Fitting Position:for cylinder 7, x 8, COIL ON PLUG						9.6452 C10		

A10	CONDENSER	**A20**	CONTACT SET	**A40**	DISTRIBUTOR CAP	**A50**	ROTOR	**A70**	PICK-UP
C10	COIL	**C20**	IGNITION MODULE	**C30**	ELECTRONIC IGNITION KIT	**E01**	IGNITION CABLE SET		

The present application list is a brief version. For the detailed information about the possibility of installation on a specific vehicle, please refer to our web-catalogue http://catalogo.facet.eu/

Vehicle	alim.	kW	Date	Engine	FUNCTIONS ON THE VEHICLE							
					A10	A20	A40	A50	A70	C10 - C30	C20	E01

ELBA

				ENGINE
1.3	Petrol	49	08/91-12/96	146 A5.000

Engine	Information	A10	A20	A40	A50	A70	C10 - C30		C20	E01
All engines	version Marelli			2.8201PHT		8.4976M				
All engines	no specific info conc. application available, version Marelli				3.8247RS, 3.8260					
All engines							9.6058	C10	9.4020	

				ENGINE
1.4 i.e.	Petrol	49	09/94-12/96	146 C5.000, 146 D5.000

Engine	Information	A10	A20	A40	A50	A70	C10 - C30		C20	E01
Eng. 146 C5.000	version Marelli			2.8214PHT	3.8260					
Eng. 146 C5.000							9.6048	C10		
Eng. 146 D5.000							9.6088	C10		4.8655

				ENGINE
1.5 i.e.	Petrol	55	08/92-09/94	149 C1.000

Engine	Information	A10	A20	A40	A50	A70	C10 - C30		C20	E01
All engines	->year 31/05/93, version Marelli			2.8204PHT						
All engines	01/06/93 ->, version Marelli			2.8214PHT						
All engines	version Marelli				3.8259					
All engines							9.6048	C10		

				ENGINE
1.6 i.e.	Petrol	55	09/94-12/96	146 C6.000, 146 D6.000

Engine	Information	A10	A20	A40	A50	A70	C10 - C30		C20	E01
Eng. 146 C6.000	version Marelli			2.8215PHT	3.8259	8.4977/1				
Eng. 146 C6.000							9.6048	C10		
Eng. 146 D6.000							9.6088	C10		4.8655

MILLE

				ENGINE
1.0i	Petrol	35	02/93-02/98	146 C7.000

Engine	Information	A10	A20	A40	A50	A70	C10 - C30		C20	E01
All engines	Qty: 2						9.6046	C10		

A10	CONDENSER	A20	CONTACT SET	A40	DISTRIBUTOR CAP	A50	ROTOR	A70	PICK-UP
C10	COIL	C20	IGNITION MODULE	C30	ELECTRONIC IGNITION KIT	E01	IGNITION CABLE SET		

The present application list is a brief version. For the detailed information about the possibility of installation on a specific vehicle, please refer to our web-catalogue http://catalogo.facet.eu/

Vehicle	alim.	kW	Date	Engine	FUNCTIONS ON THE VEHICLE							
					A10	A20	A40	A50	A70	C10 - C30	C20	E01
IMPULSE												
				ENGINE								
1.6i [USA]	Petrol	0	01/90->	RLK								
Engine	Information				A10	A20	A40	A50	A70	C10 - C30	C20	E01
All engines	version Delco Remy						2.7575PHT	3.7598				
				ENGINE								
1.8i [USA]	Petrol	0	01/91->	RLX								
Engine	Information				A10	A20	A40	A50	A70	C10 - C30	C20	E01
All engines	version Delco Remy						2.7575PHT	3.7598				
PICK-UP												
				ENGINE								
3.1i V6 [USA]	Petrol	0	01/90->	LG 6								
Engine	Information				A10	A20	A40	A50	A70	C10 - C30	C20	E01
All engines											9.4025	
RODEO												
				ENGINE								
3.1i V6 [USA]	Petrol	0	01/90-12/92	LG 6								
Engine	Information				A10	A20	A40	A50	A70	C10 - C30	C20	E01
All engines											9.4025	
STYLUS												
				ENGINE								
1.6i DOHC [USA]	Petrol	0	01/90-12/91	RLK								
Engine	Information				A10	A20	A40	A50	A70	C10 - C30	C20	E01
All engines	version Delco Remy						2.7575PHT	3.7598				
				ENGINE								
1.6i SOHC [USA]	Petrol	0	01/90->	RLR								
Engine	Information				A10	A20	A40	A50	A70	C10 - C30	C20	E01
All engines	version Delco Remy						2.7575PHT	3.7598				
				ENGINE								
1.8i DOHC [USA]	Petrol	0	01/91->	RLX								
Engine	Information				A10	A20	A40	A50	A70	C10 - C30	C20	E01
All engines	version Delco Remy						2.7575PHT	3.7598				
TROOPER												
				ENGINE								
2.3	Petrol	66	11/85-12/91	4ZD1								
Engine	Information				A10	A20	A40	A50	A70	C10 - C30	C20	E01
All engines										9.6119 C10		
				ENGINE								
2.6 4WD	Petrol	85	11/86-07/91	4ZE1								
Engine	Information				A10	A20	A40	A50	A70	C10 - C30	C20	E01
All engines	version Hitachi							3.7969				
				ENGINE								
2.6 i	Petrol	85	10/87-12/91	4ZE1								
Engine	Information				A10	A20	A40	A50	A70	C10 - C30	C20	E01
All engines	version Hitachi							3.7969				
				ENGINE								
3.2i V6 [USA]	Petrol	0	01/88-12/91	--								
Engine	Information				A10	A20	A40	A50	A70	C10 - C30	C20	E01
All engines											9.4025	

A10	CONDENSER	A20	CONTACT SET	A40	DISTRIBUTOR CAP	A50	ROTOR	A70	PICK-UP
C10	COIL	C20	IGNITION MODULE	C30	ELECTRONIC IGNITION KIT	E01	IGNITION CABLE SET		

The present application list is a brief version. For the detailed information about the possibility of installation on a specific vehicle, please refer to our web-catalogue http://catalogo.facet.eu/

Vehicle	alim.	kW	Date	Engine	FUNCTIONS ON THE VEHICLE							
					A10	A20	A40	A50	A70	C10 - C30	C20	E01
DAILY												
2.8 CNG	CNG	78	07/99-12/06	ENGINE 8149.03								
All engines				Daily 35C11, Daily 35C11P, Daily 35S11, Daily 35S11P, Daily 40C11, Daily 40C11P, Daily 60C11, Daily 65C11, Daily 65C11P, x 1, D.I.S.						9.6245 C10		
3.0 CNG	CNG	100	06/06-02/14	ENGINE F1CE0441A								
All engines				Daily 50C14, Daily 50C14P, Daily 60C14, x 4, COIL ON PLUG						9.6342 C10		
3.0 CNG	CNG	103	09/09-08/11	ENGINE F1CE0441A								
All engines				Daily 70C14, Daily 70C14P, x 4, COIL ON PLUG						9.6342 C10		
DAILY II												
2.8 CNG	CNG	78	05/99-07/07	ENGINE 8149.03								
All engines				Daily 35C11, x 1, D.I.S.						9.6245 C10		
50 C 11 Natural Power	CNG	78	05/99-04/06	ENGINE 8149.03								
All engines				Daily 50C11, x 1, D.I.S.						9.6245 C10		
DAILY III												
50 C 11 Natural Power	CNG	78	05/02-05/06	ENGINE 8149.03								
All engines				Daily 50C11, x 1, D.I.S.						9.6245 C10		
DAILY IV												
35C14 G, 35C14 G/P, 35S14 G, 35S14 G/P, 35C14 GD,...	CNG	100	07/07-08/11	ENGINE F1CE0441A								
All engines				Daily 35C14, x 4, COIL ON PLUG						9.6342 C10		
35C14 GV, 35C14 GV/P, 35S14 GV, 35S14 GV/P	CNG	100	07/07-08/11	ENGINE F1CE0441A								
All engines				Daily 35C14, x 4, COIL ON PLUG						9.6342 C10		
40C14 G, 40C14 G/P	CNG	100	07/07-08/11	ENGINE F1CE0441A								
All engines				Daily 40C14, x 4, COIL ON PLUG						9.6342 C10		
40C14 GV, 40C14 GV/P	CNG	100	07/07-08/11	ENGINE F1CE0441A								
All engines				Daily 40C14, x 4, COIL ON PLUG						9.6342 C10		
50C14 G, 50C14 G/P, 50C14 GD, 50C14 GD/P	CNG	100	07/07-08/11	ENGINE F1CE0441A								
All engines				Daily 50C14, x 4, COIL ON PLUG						9.6342 C10		
50C14 GV, 50C14 GV/P	CNG	100	07/07-08/11	ENGINE F1CE0441A								
All engines				Daily 50C14, x 4, COIL ON PLUG						9.6342 C10		

A10	CONDENSER	**A20**	CONTACT SET	**A40**	DISTRIBUTOR CAP	**A50**	ROTOR	**A70**	PICK-UP
C10	COIL	**C20**	IGNITION MODULE	**C30**	ELECTRONIC IGNITION KIT	**E01**	IGNITION CABLE SET		

The present application list is a brief version. For the detailed information about the possibility of installation on a specific vehicle, please refer to our web-catalogue http://catalogo.facet.eu/

Vehicle	alim.	kW	Date	Engine	FUNCTIONS ON THE VEHICLE							
					A10	A20	A40	A50	A70	C10 - C30	C20	E01
65C14 G, 65C14 G/P, 65C14 GD, 65C14 GD/P	CNG	100	07/07-08/11	ENGINE F1CE0441A								
Engine: All engines — Information: Daily 65C14, x 4, COIL ON PLUG										9.6342 C10		
Natural Power 35S14, 35C14, 40C14, 50C14, 65C14, 70C14	CNG	100	09/11-02/14	ENGINE F1CE0441A								
Engine: All engines — Information: Daily 35C14, x 4, COIL ON PLUG										9.6342 C10		
NaturalPower 35S14, 35C14, 40C14, 50C14, 60C14, 65C14,...	CNG	100	09/11-02/14	ENGINE F1CE0441A								
Engine: All engines — Information: Daily 35C14, x 4, COIL ON PLUG										9.6342 C10		
DAILY V												
NaturalPower 35S14, 35C14, 40C14, 50C14, 60C14, 65C14,...	CNG	100	03/14->	ENGINE F1CFA401A, F1CFA401B, F1CFA401C								
Engine: All engines — Information: Daily 35C14, Daily 50C14, x 4, COIL ON PLUG										9.6342 C10		
NaturalPower 40C14, 50C14, 60C14	CNG	100	03/14->	ENGINE F1CFA401A, F1CFA401C								
Engine: All engines — Information: Daily 50C14, x 4, COIL ON PLUG										9.6342 C10		

A10	CONDENSER	A20	CONTACT SET	A40	DISTRIBUTOR CAP	A50	ROTOR	A70	PICK-UP
C10	COIL	C20	IGNITION MODULE	C30	ELECTRONIC IGNITION KIT	E01	IGNITION CABLE SET		

The present application list is a brief version. For the detailed information about the possibility of installation on a specific vehicle, please refer to our web-catalogue http://catalogo.facet.eu/

Vehicle	alim.	kW	Date	Engine	FUNCTIONS ON THE VEHICLE							
					A10	A20	A40	A50	A70	C10 - C30	C20	E01
E-TYPE												
3.8	Petrol	195	04/61-07/64	ENGINE --, 7R								
Engine: All engines	Information:							3.8107				
4.2	Petrol	127	03/71-04/75	ENGINE --, 8L (85-87)								
Engine: All engines	Information:							3.8107				
4.2	Petrol	195	05/64-09/70	ENGINE XK 4.2 (82-87)								
Engine: All engines	Information:							3.8107				
4.2	Petrol	198	07/68-05/71	ENGINE XK 4.2 (82-87)								
Engine: All engines	Information:							3.8107				
E-TYPE 2+2												
4.2	Petrol	127	05/68-04/75	ENGINE --, 8LC								
Engine: All engines	Information:							3.8107				
4.2	Petrol	195	06/66-09/68	ENGINE --, 7L								
Engine: All engines	Information:							3.8107				
S-TYPE												
3.4	Petrol	150	05/63-08/68	ENGINE --								
Engine: All engines	Information:							3.8107				
3.8	Petrol	164	05/63-08/68	ENGINE --								
Engine: All engines	Information:							3.8107				
XJ												
12 6.0	Petrol	229	09/94-09/97	ENGINE 8E								
Engine: All engines	Information: Qty: 2									9.6070 C10		
2.8	Petrol	132	10/68-10/73	ENGINE --								
Engine: All engines	Information:							3.8107				
3.6	Petrol	136	10/86-08/89	ENGINE 9DPANA								
Engine: All engines	Information: version Lucas						2.8098PHT	3.8127RS				
3.6	Petrol	146	01/88-05/91	ENGINE 9DPALA, 9DPANA								
Engine: All engines	Information: version Lucas						2.8098PHT	3.8127RS				
4.0	Petrol	163	05/91-09/94	ENGINE 9EPCNA								
Engine: All engines	Information: version Lucas						2.8098PHT	3.8127RS				
4.0	Petrol	166	10/89-08/94	ENGINE 9EPCNA								
Engine: All engines	Information: version Lucas						2.8098PHT	3.8127RS				

A10	CONDENSER	**A20**	CONTACT SET	**A40**	DISTRIBUTOR CAP	**A50**	ROTOR	**A70**	PICK-UP
C10	COIL	**C20**	IGNITION MODULE	**C30**	ELECTRONIC IGNITION KIT	**E01**	IGNITION CABLE SET		

The present application list is a brief version. For the detailed information about the possibility of installation on a specific vehicle, please refer to our web-catalogue http://catalogo.facet.eu/

Vehicle	alim.	kW	Date	Engine	FUNCTIONS ON THE VEHICLE A10	A20	A40	A50	A70	C10 - C30	C20	E01
4.0	Petrol	171	07/94-03/96	9LPFRB			2.8098PHT	3.8127RS				
4.0	Petrol	187	10/89-08/94	9EPCNA			2.8098PHT	3.8127RS				
5.3	Petrol	207	05/91-08/93	8S (92-93)			2.8210PHT	3.8258				
6 2.8	Petrol	110	09/68-10/75	--				3.8107				
6 3.2 24V	Petrol	146	09/90-11/94	9BPMNA			2.8098PHT	3.8127RS				
6 3.6	Petrol	145	10/86-08/89	9DPANA			2.8098PHT	3.8127RS				
6 3.6	Petrol	156	10/86-08/89	9DPANA, AJ 6 (3.6, 156KW)			2.8098PHT	3.8127RS				
6 4.0	Petrol	163	09/89-11/94	9EPCNA			2.8098PHT	3.8127RS				
6 4.2	Petrol	137	10/69-05/75	XK 4.2 (-79)				3.8107				
6.0	Petrol	222	05/93-03/96	8D			2.8210PHT	3.8258				
V12 6.0	Petrol	229	03/93-11/94	8C (92-94)			2.8210PHT	3.8258				

XJSC

Vehicle	alim.	kW	Date	Engine	FUNCTIONS ON THE VEHICLE A10	A20	A40	A50	A70	C10 - C30	C20	E01
3.6	Petrol	136	08/87-05/91	9DPANA			2.8098PHT	3.8127RS				
3.6	Petrol	146	10/87-02/91	9DPALA, 9DPANA			2.8098PHT	3.8127RS				
4.0	Petrol	163	05/91-09/94	9EPCNA			2.8098PHT	3.8127RS				

A10	CONDENSER	A20	CONTACT SET	A40	DISTRIBUTOR CAP	A50	ROTOR	A70	PICK-UP
C10	COIL	C20	IGNITION MODULE	C30	ELECTRONIC IGNITION KIT	E01	IGNITION CABLE SET		

The present application list is a brief version. For the detailed information about the possibility of installation on a specific vehicle, please refer to our web-catalogue http://catalogo.facet.eu/

Vehicle	alim.	kW	Date	Engine	FUNCTIONS ON THE VEHICLE							
					A10	A20	A40	A50	A70	C10 - C30	C20	E01
				ENGINE								
4.0	Petrol	171	07/94-03/96	9LPFRB								
Engine	Information				A10	A20	A40	A50	A70	C10 - C30	C20	E01
All engines	version Lucas						2.8098PHT	3.8127RS				
				ENGINE								
5.3	Petrol	207	05/91-08/93	8S (92-93)								
Engine	Information				A10	A20	A40	A50	A70	C10 - C30	C20	E01
All engines	version Marelli						2.8210PHT	3.8258				
				ENGINE								
6.0	Petrol	222	05/93-03/96	8D								
Engine	Information				A10	A20	A40	A50	A70	C10 - C30	C20	E01
All engines	version Marelli						2.8210PHT	3.8258				
XK												
				ENGINE								
120	Petrol	118	01/50-10/54	--								
Engine	Information				A10	A20	A40	A50	A70	C10 - C30	C20	E01
All engines								3.8107				
				ENGINE								
120	Petrol	134	01/50-10/54	--								
Engine	Information				A10	A20	A40	A50	A70	C10 - C30	C20	E01
All engines								3.8107				
				ENGINE								
120	Petrol	157	01/50-10/54	--								
Engine	Information				A10	A20	A40	A50	A70	C10 - C30	C20	E01
All engines								3.8107				
				ENGINE								
150	Petrol	187	09/57-10/60	--								
Engine	Information				A10	A20	A40	A50	A70	C10 - C30	C20	E01
All engines								3.8107				
				ENGINE								
150	Petrol	198	09/57-10/60	--								
Engine	Information				A10	A20	A40	A50	A70	C10 - C30	C20	E01
All engines								3.8107				
				ENGINE								
150 S	Petrol	164	09/57-10/60	--								
Engine	Information				A10	A20	A40	A50	A70	C10 - C30	C20	E01
All engines								3.8107				

A10	CONDENSER	A20	CONTACT SET	A40	DISTRIBUTOR CAP	A50	ROTOR	A70	PICK-UP
C10	COIL	C20	IGNITION MODULE	C30	ELECTRONIC IGNITION KIT	E01	IGNITION CABLE SET		

The present application list is a brief version. For the detailed information about the possibility of installation on a specific vehicle, please refer to our web-catalogue http://catalogo.facet.eu/

Vehicle	alim.	kW	Date	Engine	FUNCTIONS ON THE VEHICLE							
					A10	A20	A40	A50	A70	C10 - C30	C20	E01
CHEROKEE II												
2.5	Petrol	90	10/86-09/90	EPE						9.6007 C10		
2.5 4x4	Petrol	90	10/86-09/90	EPE						9.6007 C10		
4.0 i	Petrol	127	07/98-09/01	--			2.7793PHT	3.7892				
4.0 i	Petrol	130	10/86-09/90	1Z7K			2.7793PHT	3.7892				
										9.6007 C10		
4.0 i	Petrol	135	12/91-09/01	MX			2.7793PHT	3.7892				
4.0 i	Petrol	136	01/88-09/01	ERH			2.7793PHT	3.7892				
										9.6007 C10		
4.0 i 4x4	Petrol	131	01/95-09/01	ERH			2.7793PHT	3.7892				
COMANCHE												
2.5	Petrol	90	10/86-09/90	EPE						9.6007 C10		
4.0 i	Petrol	130	10/87-09/90	1Z7K			2.7793PHT	3.7892				
										9.6007 C10		
COMPASS												
1.4 MultiAir	Petrol	103	03/17->	EAQ(55263624)						9.6449 C10		
1.4 MultiAir Trazione integrale	Petrol	125	03/17->	EAQ(55263623)						9.6449 C10		
GRAND CHEROKEE												
4.0 Laredo	Petrol	131	10/96-09/98	ERH			2.7793PHT					
5.2	Petrol	164	10/96-09/98	ELF								4.7181

Engine	Information
All engines	petrol injection
All engines	version Ford
All engines	x 4, PLUG ON PLUG
All engines	x 4, COIL ON PLUG

A10	CONDENSER	**A20**	CONTACT SET	**A40**	DISTRIBUTOR CAP	**A50**	ROTOR	**A70**	PICK-UP
C10	COIL	**C20**	IGNITION MODULE	**C30**	ELECTRONIC IGNITION KIT	**E01**	IGNITION CABLE SET		

The present application list is a brief version. For the detailed information about the possibility of installation on a specific vehicle, please refer to our web-catalogue http://catalogo.facet.eu/

Vehicle	alim.	kW	Date	Engine	FUNCTIONS ON THE VEHICLE							
					A10	A20	A40	A50	A70	C10 - C30	C20	E01
5.2 4x4	Petrol	164	10/96-09/98	ENGINE ELF								

Engine	Information	A10	A20	A40	A50	A70	C10 - C30		C20	E01
All engines										4.7181

GRAND WAGONEER

4.0 i	Petrol	130	10/86-09/90	ENGINE 1Z7K

Engine	Information	A10	A20	A40	A50	A70	C10 - C30		C20	E01
All engines	version Ford			2.7793PHT	3.7892					
All engines							9.6007	C10		

RENEGADE

1.4	Petrol	100	01/16->	ENGINE 552 63 624

Engine	Information	A10	A20	A40	A50	A70	C10 - C30		C20	E01
All engines	->year 01/11/16, x 4, COIL ON PLUG --- production date 2019 ->, x 4, COIL ON PLUG						9.6449	C10		

1.4	Petrol	103	07/14->	ENGINE EAM, EAM(55263624)

Engine	Information	A10	A20	A40	A50	A70	C10 - C30		C20	E01
Eng. EAM	Qty: 4						9.6449	C10		
Eng. EAM(55263624)	->year 01/11/14, 01/12/14 ->, ->year 01/11/16, x 4, COIL ON PLUG, x 4, COIL ON PLUG --- production date 2019 ->, x 4, COIL ON PLUG						9.6449	C10		

1.4 4x4	Petrol	125	07/14->	ENGINE EAM, EAM(55263623)

Engine	Information	A10	A20	A40	A50	A70	C10 - C30		C20	E01
Eng. EAM	Qty: 4						9.6449	C10		
Eng. EAM(55263623)	->year 01/11/14, 01/12/14 ->, ->year 01/11/16, x 4, COIL ON PLUG, x 4, COIL ON PLUG --- production date 2019 ->, x 4, COIL ON PLUG						9.6449	C10		

WAGONEER

2.5	Petrol	90	10/86-09/90	ENGINE EPE

Engine	Information	A10	A20	A40	A50	A70	C10 - C30		C20	E01
All engines	petrol injection						9.6007	C10		

4.0 i	Petrol	130	10/86-09/90	ENGINE 1Z7K

Engine	Information	A10	A20	A40	A50	A70	C10 - C30		C20	E01
All engines	version Ford			2.7793PHT	3.7892					
All engines							9.6007	C10		

WRANGLER

2.5	Petrol	89	12/91-08/96	ENGINE EPE

Engine	Information	A10	A20	A40	A50	A70	C10 - C30		C20	E01
All engines	version Ford				3.7892					

4.0	Petrol	130	10/86-09/90	ENGINE 1Z7K

Engine	Information	A10	A20	A40	A50	A70	C10 - C30		C20	E01
All engines	version Ford			2.7793PHT	3.7892					
All engines							9.6007	C10		

4.0	Petrol	131	10/90-09/96	ENGINE 1Z7K, ERH

Engine	Information	A10	A20	A40	A50	A70	C10 - C30		C20	E01
All engines	version Ford			2.7793PHT						
Eng. ERH	version Ford				3.7892					

A10	CONDENSER	A20	CONTACT SET	A40	DISTRIBUTOR CAP	A50	ROTOR	A70	PICK-UP
C10	COIL	C20	IGNITION MODULE	C30	ELECTRONIC IGNITION KIT	E01	IGNITION CABLE SET		

The present application list is a brief version. For the detailed information about the possibility of installation on a specific vehicle, please refer to our web-catalogue http://catalogo.facet.eu/

Vehicle	alim.	kW	Date	Engine	FUNCTIONS ON THE VEHICLE							
					A10	A20	A40	A50	A70	C10 - C30	C20	E01
GT												
				ENGINE								
2.0	Petrol	104	06/75-12/76	--								
Engine	Information				A10	A20	A40	A50	A70	C10 - C30	C20	E01
All engines							2.8075	3.8106				
HEALEY												
				ENGINE								
2.0	Petrol	104	01/72-12/75	--								
Engine	Information				A10	A20	A40	A50	A70	C10 - C30	C20	E01
All engines							2.8075	3.8106				

A10	CONDENSER	**A20**	CONTACT SET	**A40**	DISTRIBUTOR CAP	**A50**	ROTOR	**A70**	PICK-UP
C10	COIL	**C20**	IGNITION MODULE	**C30**	ELECTRONIC IGNITION KIT	**E01**	IGNITION CABLE SET		

The present application list is a brief version. For the detailed information about the possibility of installation on a specific vehicle, please refer to our web-catalogue http://catalogo.facet.eu/

Vehicle	alim.	kW	Date	Engine	FUNCTIONS ON THE VEHICLE							
					A10	A20	A40	A50	A70	C10 - C30	C20	E01
AVELLA												
1.3	Petrol	55	11/95-12/01	ENGINE: B3								
Engine: All engines	Information: version Mitsubishi						2.8322/21					
1.5	Petrol	55	02/97-12/01	ENGINE: --								
Engine: All engines	Information: version Mitsubishi						2.8322/21					
BORREGO												
3.8	Petrol	202	06/08-12/13	ENGINE: --								
Engine: All engines	Information: Qty: 6									9.6392 C10		
4.6	Petrol	250	09/08-12/11	ENGINE: G8BA								
Engine: All engines	Information: Qty: 8									9.6456 C10		
CADENZA												
3.5 CVVT	Petrol	213	01/10->	ENGINE: G6DC								
Engine: All engines	Information: Qty: 6									9.6392 C10		
CARENS I												
1.6	Petrol	77	07/02->	ENGINE: GA6D								
Engine: All engines	Information:											4.7239
1.8	Petrol	93	07/02->	ENGINE: TB								
Engine: All engines	Information:											4.9841
1.8 i	Petrol	81	11/00-07/02	ENGINE: T8								
Engine: All engines	Information:											4.9841
2.0 CVVT	Petrol	102	08/04->	ENGINE: G4GC								
Engine: All engines	Information: x 1, D.I.S.									9.6481 C10		
Engine: All engines	Information:											4.9385
CARENS II												
1.6 CVVT	Petrol	93	10/10->	ENGINE: G4FC								
Engine: All engines	Information: x 4, COIL ON PLUG									9.6443 C10		
1.6 CVVT	Petrol	97	08/09->	ENGINE: G4FC								
Engine: All engines	Information: x 4, COIL ON PLUG									9.6443 C10		
2.0 CVVT	Petrol	106	09/06->	ENGINE: G4KA								
Engine: All engines	Information: x 4, COIL ON PLUG									9.6392 C10		
CARENS III												
1.6 GDi	Petrol	99	03/13->	ENGINE: G4FD								
Engine: All engines	Information: x 4, COIL ON PLUG									9.6511 C10		

A10	CONDENSER	A20	CONTACT SET	A40	DISTRIBUTOR CAP	A50	ROTOR	A70	PICK-UP
C10	COIL	C20	IGNITION MODULE	C30	ELECTRONIC IGNITION KIT	E01	IGNITION CABLE SET		

The present application list is a brief version. For the detailed information about the possibility of installation on a specific vehicle, please refer to our web-catalogue http://catalogo.facet.eu/

Vehicle	alim.	kW	Date	Engine	FUNCTIONS ON THE VEHICLE A10	A20	A40	A50	A70	C10 - C30	C20	E01

CEED I

				ENGINE
1.4	Petrol	77	12/06-12/12	G4FA

Engine	Information	A10	A20	A40	A50	A70	C10 - C30		C20	E01
All engines	->year 01/01/09, x 4, COIL ON PLUG						9.6395	C10		
All engines	01/02/09 ->, x 4, COIL ON PLUG, x 4, COIL ON PLUG						9.6443	C10		

				ENGINE
1.4	Petrol	80	12/06-12/12	G4FA

Engine	Information	A10	A20	A40	A50	A70	C10 - C30		C20	E01
All engines	->year 01/01/09, x 4, COIL ON PLUG						9.6395	C10		
All engines	01/02/09 ->, x 4, COIL ON PLUG						9.6443	C10		

				ENGINE
1.4 CVVT	Petrol	66	07/09-12/12	G4FA, G4FA-L

Engine	Information	A10	A20	A40	A50	A70	C10 - C30		C20	E01
Eng. G4FA	x 4, COIL ON PLUG						9.6443	C10		
Eng. G4FA-L	Qty: 4						9.6443	C10		

				ENGINE
1.4 LPG	Petrol/ Liquified Petro-leum Gas (LPG)	64	06/11-04/12	G4FA

Engine	Information	A10	A20	A40	A50	A70	C10 - C30		C20	E01
All engines	x 4, COIL ON PLUG						9.6443	C10		

				ENGINE
1.4 LPG	Petrol/ Liquified Petro-leum Gas (LPG)	80	01/09-12/10	G4FA

Engine	Information	A10	A20	A40	A50	A70	C10 - C30		C20	E01
All engines	x 4, COIL ON PLUG						9.6443	C10		

				ENGINE
1.6	Petrol	85	09/07-12/12	G4FC

Engine	Information	A10	A20	A40	A50	A70	C10 - C30		C20	E01
All engines	->year 01/03/09, x 4, COIL ON PLUG						9.6395	C10		
All engines	01/04/09 ->, x 4, COIL ON PLUG						9.6443	C10		

				ENGINE
1.6	Petrol	90	12/06-12/12	G4FC

Engine	Information	A10	A20	A40	A50	A70	C10 - C30		C20	E01
All engines	x 4, COIL ON PLUG						9.6443	C10		

				ENGINE
1.6	Petrol	93	09/07-12/12	G4FC

Engine	Information	A10	A20	A40	A50	A70	C10 - C30		C20	E01
All engines	x 4, COIL ON PLUG						9.6443	C10		

				ENGINE
1.6 CVVT	Petrol	92	06/09-12/12	G4FC

Engine	Information	A10	A20	A40	A50	A70	C10 - C30		C20	E01
All engines	x 4, COIL ON PLUG						9.6443	C10		

				ENGINE
1.6 LPG	Petrol/ Liquified Petro-leum Gas (LPG)	87	06/11-12/11	G4FC

Engine	Information	A10	A20	A40	A50	A70	C10 - C30		C20	E01
All engines	x 4, COIL ON PLUG						9.6443	C10		

				ENGINE
1.6 LPG	Petrol/ Liquified Petro-leum Gas (LPG)	91	06/07-09/12	G4FC

Engine	Information	A10	A20	A40	A50	A70	C10 - C30		C20	E01
All engines	->year 01/03/09, x 4, COIL ON PLUG						9.6395	C10		
All engines	01/04/09 ->, x 4, COIL ON PLUG, x 4, COIL ON PLUG						9.6443	C10		

A10	CONDENSER	A20	CONTACT SET	A40	DISTRIBUTOR CAP	A50	ROTOR	A70	PICK-UP
C10	COIL	C20	IGNITION MODULE	C30	ELECTRONIC IGNITION KIT	E01	IGNITION CABLE SET		

The present application list is a brief version. For the detailed information about the possibility of installation on a specific vehicle, please refer to our web-catalogue http://catalogo.facet.eu/

Vehicle	alim.	kW	Date	Engine	FUNCTIONS ON THE VEHICLE							
					A10	A20	A40	A50	A70	C10 - C30	C20	E01
2.0	Petrol	105	12/06-12/12	ENGINE G4GC								
Engine: All engines	Information: x 1, D.I.S.									9.6481 C10		
Engine: All engines	Information:											4.9385
CEED II												
1.0 T-GDI	Petrol	74	04/15-07/18	ENGINE G3LC								
Engine: All engines	Information: x 3, COIL ON PLUG									9.6538 C10		
1.0 T-GDI	Petrol	88	04/15-07/18	ENGINE G3LC								
Engine: All engines	Information: x 3, COIL ON PLUG									9.6538 C10		
1.4 CVVT	Petrol	66	05/12-07/18	ENGINE G4FA, G4FA-L								
Engine: Eng. G4FA	Information: x 4, COIL ON PLUG									9.6443 C10		
Engine: Eng. G4FA-L	Information: Qty: 4									9.6443 C10		
1.4 CVVT	Petrol	73	05/12-07/18	ENGINE G4FA								
Engine: All engines	Information: x 4, COIL ON PLUG									9.6443 C10		
1.4 LPG	Petrol/ Liquified Petro-leum Gas (LPG)	72	05/12-07/18	ENGINE G4FA								
Engine: All engines	Information: x 4, COIL ON PLUG									9.6443 C10		
1.4 MPI	Petrol	74	04/15-07/18	ENGINE G4LC								
Engine: All engines	Information: x 4, COIL ON PLUG									9.6522 C10		
1.6 CVVT	Petrol	92	05/12->	ENGINE G4FC								
Engine: All engines	Information: Qty: 4									9.6443 C10		
1.6 CVVT	Petrol	95	01/13-07/18	ENGINE G4FC								
Engine: All engines	Information: x 4, COIL ON PLUG									9.6443 C10		
1.6 CVVT	Petrol	96	11/14-07/18	ENGINE G4FC								
Engine: All engines	Information: x 4, COIL ON PLUG									9.6443 C10		
1.6 GDI	Petrol	99	05/12-07/18	ENGINE G4FD								
Engine: All engines	Information: x 4, COIL ON PLUG									9.6511 C10		
CEED III												
1.0 T-GDI	Petrol	74	09/19->	ENGINE G3LC								
Engine: All engines	Information: x 3, COIL ON PLUG									9.6538 C10		
1.0 T-GDI	Petrol	88	03/18->	ENGINE G3LC								
Engine: All engines	Information: x 3, COIL ON PLUG									9.6538 C10		

A10	CONDENSER	A20	CONTACT SET	A40	DISTRIBUTOR CAP	A50	ROTOR	A70	PICK-UP
C10	COIL	C20	IGNITION MODULE	C30	ELECTRONIC IGNITION KIT	E01	IGNITION CABLE SET		

The present application list is a brief version. For the detailed information about the possibility of installation on a specific vehicle, please refer to our web-catalogue http://catalogo.facet.eu/

Vehicle	alim.	kW	Date	Engine	FUNCTIONS ON THE VEHICLE							
					A10	A20	A40	A50	A70	C10 - C30	C20	E01
1.4	Petrol	**73**	03/18->	**ENGINE** G4LC								

Engine	Information	A10	A20	A40	A50	A70	C10 - C30		C20	E01
All engines	x 4, COIL ON PLUG						9.6522	C10		

1.4 LPG	Petrol/ Liquified Petro-leum Gas (LPG)	**71**	12/18->	**ENGINE** G4LC

Engine	Information	A10	A20	A40	A50	A70	C10 - C30		C20	E01
All engines	x 4, COIL ON PLUG						9.6522	C10		

1.6	Petrol	**94**	03/18->	**ENGINE** G4FG

Engine	Information	A10	A20	A40	A50	A70	C10 - C30		C20	E01
All engines	x 4, COIL ON PLUG						9.6443	C10		

1.6 GDI Hybrid	Petrol/ Electric	**104**	12/19->	**ENGINE** G4LE

Engine	Information	A10	A20	A40	A50	A70	C10 - C30		C20	E01
All engines	x 4, COIL ON PLUG						9.6547	C10		

1.6 GDI Hybrid	Petrol/ Electric	**77**	12/19->	**ENGINE** G4LE

Engine	Information	A10	A20	A40	A50	A70	C10 - C30		C20	E01
All engines	x 4, COIL ON PLUG						9.6547	C10		

GDI Hybrid	Petrol/ Electric	**104**	12/19->	**ENGINE** G4LE

Engine	Information	A10	A20	A40	A50	A70	C10 - C30		C20	E01
All engines	x 4, COIL ON PLUG						9.6547	C10		

GDI Hybrid	Petrol/ Electric	**77**	12/19->	**ENGINE** G4LE

Engine	Information	A10	A20	A40	A50	A70	C10 - C30		C20	E01
All engines	x 4, COIL ON PLUG						9.6547	C10		

T-GDI	Petrol	**88**	03/18->	**ENGINE** G3LC

Engine	Information	A10	A20	A40	A50	A70	C10 - C30		C20	E01
All engines	x 3, COIL ON PLUG						9.6538	C10		

CERATO

2.0 CVVT	Petrol	**110**	07/09-02/14	**ENGINE** G4KD

Engine	Information	A10	A20	A40	A50	A70	C10 - C30		C20	E01
All engines	x 4, COIL ON PLUG						9.6456	C10		

CERATO I

1.6	Petrol	**77**	04/04-12/09	**ENGINE** G4ED

Engine	Information	A10	A20	A40	A50	A70	C10 - C30		C20	E01
All engines	01/11/06 ->, x 4, COIL ON PLUG						9.6395	C10		
All engines	->year 01/10/06, x 1, D.I.S.						9.6486	C10		
All engines										4.7111

1.6	Petrol	**90**	04/04->	**ENGINE** G4FC, G4GR

Engine	Information	A10	A20	A40	A50	A70	C10 - C30		C20	E01
All engines	x 4, COIL ON PLUG						9.6395	C10		
Eng. G4FC	->year 25/01/08, Qty: 4						9.6395	C10		
Eng. G4FC	25/01/08 ->, Qty: 4						9.6443	C10		

2.0	Petrol	**105**	03/04-05/07	**ENGINE** G4GC

Engine	Information	A10	A20	A40	A50	A70	C10 - C30		C20	E01
All engines	x 1, D.I.S.						9.6481	C10		
All engines										4.9385

A10	CONDENSER	**A20**	CONTACT SET	**A40**	DISTRIBUTOR CAP	**A50**	ROTOR	**A70**	PICK-UP
C10	COIL	**C20**	IGNITION MODULE	**C30**	ELECTRONIC IGNITION KIT	**E01**	IGNITION CABLE SET		

The present application list is a brief version. For the detailed information about the possibility of installation on a specific vehicle, please refer to our web-catalogue http://catalogo.facet.eu/

Vehicle	alim.	kW	Date	Engine	FUNCTIONS ON THE VEHICLE							
					A10	A20	A40	A50	A70	C10 - C30	C20	E01

CERATO II

1.6	Petrol	90	01/10->	ENGINE: G4FC

Engine	Information	A10	A20	A40	A50	A70	C10 - C30		C20	E01
All engines	x 4, COIL ON PLUG						9.6456	C10		

1.6	Petrol	93	01/10-06/13	ENGINE: G4FC

Engine	Information	A10	A20	A40	A50	A70	C10 - C30		C20	E01
All engines	x 4, COIL ON PLUG						9.6443	C10		

1.6 CVVT	Petrol	91	02/09->	ENGINE: G4FC

Engine	Information	A10	A20	A40	A50	A70	C10 - C30		C20	E01
All engines	Qty: 4						9.6443	C10		
All engines	x 4, COIL ON PLUG						9.6443	C10		

1.6 CVVT	Petrol	93	01/10-06/13	ENGINE: G4FC

Engine	Information	A10	A20	A40	A50	A70	C10 - C30		C20	E01
All engines	x 4, COIL ON PLUG						9.6443	C10		

2.0	Petrol	115	01/09->	ENGINE: G4KD

Engine	Information	A10	A20	A40	A50	A70	C10 - C30		C20	E01
All engines	x 4, COIL ON PLUG						9.6456	C10		

2.0	Petrol	116	07/10->	ENGINE: G4KD

Engine	Information	A10	A20	A40	A50	A70	C10 - C30		C20	E01
All engines	Qty: 4						9.6456	C10		

2.0 CVVT	Petrol	110	07/09-06/13	ENGINE: G4KD

Engine	Information	A10	A20	A40	A50	A70	C10 - C30		C20	E01
All engines	x 4, COIL ON PLUG						9.6456	C10		

2.0 CVVT	Petrol	115	01/09->	ENGINE: --, G4KD

Engine	Information	A10	A20	A40	A50	A70	C10 - C30		C20	E01
Eng. G4KD	x 4, COIL ON PLUG						9.6456	C10		
Eng. --							9.6481	C10		4.9385

CERATO III

1.6	Petrol	91	07/12->	ENGINE: --

Engine	Information	A10	A20	A40	A50	A70	C10 - C30		C20	E01
All engines	no specific info conc. application available, Qty: 4						9.6443	C10		

1.6 CVVT	Petrol	95	07/16->	ENGINE: G4FC

Engine	Information	A10	A20	A40	A50	A70	C10 - C30		C20	E01
All engines	x 4, COIL ON PLUG						9.6443	C10		

1.6 MPi	Petrol	96	06/13->	ENGINE: G4FG

Engine	Information	A10	A20	A40	A50	A70	C10 - C30		C20	E01
All engines	x 4, COIL ON PLUG						9.6443	C10		

CLARUS

1.8 i 16V	Petrol	85	07/96->	ENGINE: T8

Engine	Information	A10	A20	A40	A50	A70	C10 - C30		C20	E01
All engines										4.9841

2.0 i 16V	Petrol	98	07/96->	ENGINE: FE (16V)

Engine	Information	A10	A20	A40	A50	A70	C10 - C30		C20	E01
All engines	version Mitsubishi			2.8322/21						

A10	CONDENSER	A20	CONTACT SET	A40	DISTRIBUTOR CAP	A50	ROTOR	A70	PICK-UP
C10	COIL	C20	IGNITION MODULE	C30	ELECTRONIC IGNITION KIT	E01	IGNITION CABLE SET		

The present application list is a brief version. For the detailed information about the possibility of installation on a specific vehicle, please refer to our web-catalogue http://catalogo.facet.eu/

Vehicle	alim.	kW	Date	Engine	FUNCTIONS ON THE VEHICLE							
					A10	A20	A40	A50	A70	C10 - C30	C20	E01
FORTE												
1.6	Petrol	91	07/12->	ENGINE --								
Engine: All engines	Information: no specific info conc. application available, Qty: 4									9.6443 C10		
JOICE												
2.0	Petrol	102	02/00->	ENGINE G4CP								
Engine: All engines												4.9401
2.0	Petrol	88	09/01->	ENGINE G4CP								
Engine: All engines												4.9401
MAGENTIS I												
2.0	Petrol	100	05/01-09/05	ENGINE G4JP								
Engine: All engines												4.7241
2.4 [USA]	Petrol	0	01/01-12/04	ENGINE --								
Engine: All engines												4.7241
MAGENTIS II												
2.0	Petrol	100	09/06->	ENGINE G4JP								
Engine: All engines	Information: Qty: 4									9.6392 C10		
2.0	Petrol	106	11/05-12/10	ENGINE G4KA								
Engine: All engines	Information: x 4, COIL ON PLUG									9.6392 C10		
2.0	Petrol	121	09/09-12/10	ENGINE G4KD								
Engine: All engines	Information: x 4, COIL ON PLUG									9.6456 C10		
MOHAVE												
3.8	Petrol	202	12/08->	ENGINE --								
Engine: All engines	Information: Qty: 6									9.6392 C10		
4.6	Petrol	251	09/08->	ENGINE --								
Engine: All engines	Information: Qty: 8									9.6456 C10		
NIRO												
1.6 GDI Hybrid	Petrol/ Electric	104	09/16->	ENGINE G4LE								
Engine: All engines	Information: x 4, COIL ON PLUG									9.6547 C10		
1.6 GDI Hybrid	Petrol/ Electric	107	09/16->	ENGINE G4LE								
Engine: All engines	Information: x 4, COIL ON PLUG									9.6547 C10		
1.6 GDI Hybrid	Petrol/ Electric	77	09/16->	ENGINE G4LE								
Engine: All engines	Information: x 4, COIL ON PLUG									9.6547 C10		

A10	CONDENSER	A20	CONTACT SET	A40	DISTRIBUTOR CAP	A50	ROTOR	A70	PICK-UP
C10	COIL	C20	IGNITION MODULE	C30	ELECTRONIC IGNITION KIT	E01	IGNITION CABLE SET		

The present application list is a brief version. For the detailed information about the possibility of installation on a specific vehicle, please refer to our web-catalogue http://catalogo.facet.eu/

Vehicle	alim.	kW	Date	Engine	FUNCTIONS ON THE VEHICLE A10	A20	A40	A50	A70	C10 - C30	C20	E01
GDI Hybrid	Petrol/ Electric	77	09/16->	G4LE								

Engine	Information	A10	A20	A40	A50	A70	C10 - C30		C20	E01
All engines	x 4, COIL ON PLUG						9.6547	C10		

OPIRUS

				ENGINE
3.8 V6	Petrol	196	10/06->	G6DA

Engine	Information	A10	A20	A40	A50	A70	C10 - C30		C20	E01
All engines	x 6, COIL ON PLUG						9.6392	C10		

OPTIMA II

				ENGINE
2.0	Petrol	106	05/08->	G4KA

Engine	Information	A10	A20	A40	A50	A70	C10 - C30		C20	E01
All engines	Qty: 4						9.6392	C10		

OPTIMA III

				ENGINE
2.0	Petrol	121	03/10->	--

Engine	Information	A10	A20	A40	A50	A70	C10 - C30		C20	E01
All engines	Qty: 4						9.6456	C10		

				ENGINE
2.0	Petrol	125	03/12->	G4KD

Engine	Information	A10	A20	A40	A50	A70	C10 - C30		C20	E01
All engines	Optima, x 4, COIL ON PLUG						9.6456	C10		

				ENGINE
2.0 CVVL	Petrol	121	03/12->	G4KD

Engine	Information	A10	A20	A40	A50	A70	C10 - C30		C20	E01
All engines	Optima, x 4, COIL ON PLUG						9.6456	C10		

				ENGINE
2.0 CVVT	Petrol	110	01/11-12/15	G4KD

Engine	Information	A10	A20	A40	A50	A70	C10 - C30		C20	E01
All engines	Optima, x 4, COIL ON PLUG						9.6456	C10		

				ENGINE
2.4	Petrol	129	06/10-12/15	G4KC

Engine	Information	A10	A20	A40	A50	A70	C10 - C30		C20	E01
All engines	Optima, x 4, COIL ON PLUG						9.6456	C10		

				ENGINE
2.4	Petrol	132	03/10->	--, G4KE, G4KJ

Engine	Information	A10	A20	A40	A50	A70	C10 - C30		C20	E01
Eng. --	Qty: 4						9.6456	C10		
Eng. G4KE, G4KJ	Optima, x 4, COIL ON PLUG						9.6456	C10		

				ENGINE
2.4	Petrol	149	09/10->	G4KJ

Engine	Information	A10	A20	A40	A50	A70	C10 - C30		C20	E01
All engines	Qty: 4						9.6456	C10		

				ENGINE
2.4 CVVT	Petrol	132	01/12->	G4KE, G4KJ

Engine	Information	A10	A20	A40	A50	A70	C10 - C30		C20	E01
All engines	Optima, x 4, COIL ON PLUG						9.6456	C10		

				ENGINE
2.4 Hybrid	Petrol/ Electric	154	09/11->	G4KC

Engine	Information	A10	A20	A40	A50	A70	C10 - C30		C20	E01
All engines	Qty: 4						9.6456	C10		

OPTIMA IV

				ENGINE
2.4 MPi	Petrol	126	09/15->	G4KE

Engine	Information	A10	A20	A40	A50	A70	C10 - C30		C20	E01
All engines	Optima, x 4, COIL ON PLUG						9.6456	C10		

A10	CONDENSER	A20	CONTACT SET	A40	DISTRIBUTOR CAP	A50	ROTOR	A70	PICK-UP
C10	COIL	C20	IGNITION MODULE	C30	ELECTRONIC IGNITION KIT	E01	IGNITION CABLE SET		

The present application list is a brief version. For the detailed information about the possibility of installation on a specific vehicle, please refer to our web-catalogue http://catalogo.facet.eu/

Vehicle	alim.	kW	Date	Engine	FUNCTIONS ON THE VEHICLE: A10	A20	A40	A50	A70	C10 - C30	C20	E01

PICANTO I

				ENGINE
1.0	Petrol	45	04/04-04/11	G4HE

Engine	Information	A10	A20	A40	A50	A70	C10 - C30		C20	E01
All engines	01/10/06 ->, Fitting Position:for cylinder 2, Fitting Position:for cylinder 3, x 1, D.I.S.						9.6480	C10		
All engines	01/10/06 ->, Fitting Position:for cylinder 1, Fitting Position:for cylinder 4, x 1, D.I.S.						9.6487	C10		
All engines	->year 01/09/06, Fitting Position:for cylinder 1-4, x 1, D.I.S.						9.6489	C10		
All engines										4.7119

				ENGINE
1.0	Petrol	46	09/07-04/11	G4HE

Engine	Information	A10	A20	A40	A50	A70	C10 - C30		C20	E01
All engines	Fitting Position:for cylinder 2, Fitting Position:for cylinder 3, x 1, D.I.S.						9.6480	C10		
All engines	Fitting Position:for cylinder 1, Fitting Position:for cylinder 4, x 1, D.I.S.						9.6487	C10		
All engines										4.7235

				ENGINE
1.0 LPG	Petrol/ Liquified Petro-leum Gas (LPG)	45	01/09-04/11	G4HE

Engine	Information	A10	A20	A40	A50	A70	C10 - C30		C20	E01
All engines	Fitting Position:for cylinder 2, Fitting Position:for cylinder 3, x 1, D.I.S.						9.6480	C10		
All engines	Fitting Position:for cylinder 1, Fitting Position:for cylinder 4, x 1, D.I.S.						9.6487	C10		

				ENGINE
1.1	Petrol	48	04/04-09/11	G4HG

Engine	Information	A10	A20	A40	A50	A70	C10 - C30		C20	E01
All engines	01/10/06 ->, Fitting Position:for cylinder 2, Fitting Position:for cylinder 3, x 1, D.I.S.						9.6480	C10		
All engines	01/10/06 ->, Fitting Position:for cylinder 1, Fitting Position:for cylinder 4, x 1, D.I.S.						9.6487	C10		
All engines	->year 01/09/06, Fitting Position:for cylinder 1-4, x 1, D.I.S.						9.6489	C10		
All engines										4.7119

				ENGINE
1.1	Petrol	71	08/07->	--

Engine	Information	A10	A20	A40	A50	A70	C10 - C30		C20	E01
All engines	no specific info conc. application available						9.6480, 9.6487	C10		
All engines	Kit						9.6489	C10		
All engines										4.7235

				ENGINE
1.1 LPG	Petrol/ Liquified Petro-leum Gas (LPG)	48	01/09-04/11	G4HG

Engine	Information	A10	A20	A40	A50	A70	C10 - C30		C20	E01
All engines	Fitting Position:for cylinder 2, Fitting Position:for cylinder 3, x 1, D.I.S.						9.6480	C10		
All engines	Fitting Position:for cylinder 1, Fitting Position:for cylinder 4, x 1, D.I.S.						9.6487	C10		

PICANTO II

				ENGINE
1.0	Petrol	49	05/11-03/17	G3LA

Engine	Information	A10	A20	A40	A50	A70	C10 - C30		C20	E01
All engines	x 3, COIL ON PLUG						9.6514	C10		

				ENGINE
1.0	Petrol	51	05/11-03/17	G3LA

Engine	Information	A10	A20	A40	A50	A70	C10 - C30		C20	E01
All engines	x 3, COIL ON PLUG						9.6514	C10		

				ENGINE
1.0 Bi-Fuel	Petrol/ Liquified Petro-leum Gas (LPG)	60	05/11-10/14	B3LA

Engine	Information	A10	A20	A40	A50	A70	C10 - C30		C20	E01
All engines	x 3, COIL ON PLUG						9.6514	C10		

A10	CONDENSER	A20	CONTACT SET	A40	DISTRIBUTOR CAP	A50	ROTOR	A70	PICK-UP
C10	COIL	C20	IGNITION MODULE	C30	ELECTRONIC IGNITION KIT	E01	IGNITION CABLE SET		

The present application list is a brief version. For the detailed information about the possibility of installation on a specific vehicle, please refer to our web-catalogue http://catalogo.facet.eu/

Vehicle	alim.	kW	Date	Engine	FUNCTIONS ON THE VEHICLE A10	A20	A40	A50	A70	C10 - C30	C20	E01
1.0 LPG	Petrol/ Liquified Petro-leum Gas (LPG)	49	08/13-03/17	ENGINE B3LA								
Engine: All engines — Information: x 3, COIL ON PLUG										9.6514 C10		
1.2	Petrol	63	09/11-03/17	ENGINE G4LA								
Engine: All engines — Information: x 1, -start-stop function, D.I.S.										9.6479 C10		
Engine: All engines — Information: x 4, +start-stop function, COIL ON PLUG										9.6512 C10		
1.2	Petrol	64	09/11-02/17	ENGINE G4LA								
Engine: All engines — Information: x 1, D.I.S.										9.6479 C10		
Engine: All engines — Information: x 4, +start-stop function, COIL ON PLUG										9.6512 C10		
PICANTO III												
1.0	Petrol	49	03/17->	ENGINE G3LA, G3LD								
Engine: All engines — Information: x 3, COIL ON PLUG										9.6538 C10		
1.0	Petrol	51	03/17->	ENGINE G3LA								
Engine: All engines — Information: x 3, COIL ON PLUG										9.6538 C10		
1.0 LPG	Petrol/ Liquified Petro-leum Gas (LPG)	48	11/18->	ENGINE G3LA								
Engine: All engines — Information: x 3, COIL ON PLUG										9.6538 C10		
1.0 T-GDi	Petrol	74	03/17->	ENGINE G3LC								
Engine: All engines — Information: x 3, COIL ON PLUG										9.6538 C10		
1.2	Petrol	62	03/17->	ENGINE G4LA								
Engine: All engines — Information: x 4, COIL ON PLUG										9.6512 C10		
PRIDE												
1.1 i	Petrol	38	01/91-10/00	ENGINE B1								
Engine: All engines — Information: version Mitsubishi							2.8322/22	3.8331/8				
Engine: All engines — Information: alternatively												4.9398
1.3	Petrol	44	01/90-10/00	ENGINE B3								
Engine: All engines — Information: version Mitsubishi							2.8322/21					
Engine: All engines — Information: alternatively												4.9398
1.3	Petrol	47	10/96-05/01	ENGINE B3, B3A5								
Engine: All engines — Information: version Mitsubishi							2.8322/21					
Engine: All engines — Information: alternatively												4.9398
1.3	Petrol	53	01/90-09/01	ENGINE B3								
Engine: All engines — Information: version Mitsubishi							2.8322/21					
Engine: All engines — Information: alternatively												4.9398

A10	CONDENSER	A20	CONTACT SET	A40	DISTRIBUTOR CAP	A50	ROTOR	A70	PICK-UP
C10	COIL	C20	IGNITION MODULE	C30	ELECTRONIC IGNITION KIT	E01	IGNITION CABLE SET		

The present application list is a brief version. For the detailed information about the possibility of installation on a specific vehicle, please refer to our web-catalogue http://catalogo.facet.eu/

Vehicle	alim.	kW	Date	Engine	FUNCTIONS ON THE VEHICLE A10	A20	A40	A50	A70	C10 - C30	C20	E01
1.3 i	Petrol	51	01/90-05/97	--								

Engine	Information	A10	A20	A40	A50	A70	C10 - C30		C20	E01
All engines	version Mitsubishi			2.8322/22	3.8331/8					
All engines	alternatively									4.9398

PRO CEE'D

1.4 CVVT	Petrol	73	05/12-07/18	G4FA

Engine	Information	A10	A20	A40	A50	A70	C10 - C30		C20	E01
All engines	x 4, COIL ON PLUG						9.6443	C10		

1.6 GDI	Petrol	99	04/15-07/18	G4FD

Engine	Information	A10	A20	A40	A50	A70	C10 - C30		C20	E01
All engines	x 4, COIL ON PLUG						9.6511	C10		

PRO CEE'D I

1.4	Petrol	77	02/08-09/12	G4FA

Engine	Information	A10	A20	A40	A50	A70	C10 - C30		C20	E01
All engines	->year 01/03/09, x 4, COIL ON PLUG						9.6395	C10		
All engines	01/04/09 ->, x 4, COIL ON PLUG						9.6443	C10		

1.4	Petrol	80	02/08-09/12	G4FA

Engine	Information	A10	A20	A40	A50	A70	C10 - C30		C20	E01
All engines	x 4, COIL ON PLUG						9.6443	C10		

1.4 CVVT	Petrol	66	06/10-09/12	G4FA, G4FA-L

Engine	Information	A10	A20	A40	A50	A70	C10 - C30		C20	E01
Eng. G4FA	x 4, COIL ON PLUG						9.6443	C10		
Eng. G4FA-L	Qty: 4						9.6443	C10		

1.6	Petrol	90	02/08-09/12	G4FC

Engine	Information	A10	A20	A40	A50	A70	C10 - C30		C20	E01
All engines	->year 01/03/09, x 4, COIL ON PLUG						9.6395	C10		
All engines	01/04/09 ->, x 4, COIL ON PLUG						9.6443	C10		

1.6	Petrol	93	02/08-09/12	G4FC

Engine	Information	A10	A20	A40	A50	A70	C10 - C30		C20	E01
All engines	x 4, COIL ON PLUG						9.6443	C10		

1.6 CVVT	Petrol	85	02/08-09/12	G4FC

Engine	Information	A10	A20	A40	A50	A70	C10 - C30		C20	E01
All engines	->year 01/03/09, x 4, COIL ON PLUG						9.6395	C10		
All engines	01/04/09 ->, x 4, COIL ON PLUG						9.6443	C10		

1.6 CVVT	Petrol	92	10/10-02/13	G4FC

Engine	Information	A10	A20	A40	A50	A70	C10 - C30		C20	E01
All engines	x 4, COIL ON PLUG						9.6443	C10		

2.0	Petrol	105	02/08-09/12	G4GC

Engine	Information	A10	A20	A40	A50	A70	C10 - C30		C20	E01
All engines	x 1, D.I.S.						9.6481	C10		
All engines										4.9385

2.0 LPG	Petrol/ Liquified Petro-leum Gas (LPG)	105	01/09-12/09	G4GC

Engine	Information	A10	A20	A40	A50	A70	C10 - C30		C20	E01
All engines	x 1, D.I.S.						9.6481	C10		

A10	CONDENSER	A20	CONTACT SET	A40	DISTRIBUTOR CAP	A50	ROTOR	A70	PICK-UP
C10	COIL	C20	IGNITION MODULE	C30	ELECTRONIC IGNITION KIT	E01	IGNITION CABLE SET		

The present application list is a brief version. For the detailed information about the possibility of installation on a specific vehicle, please refer to our web-catalogue http://catalogo.facet.eu/

Vehicle	alim.	kW	Date	Engine	FUNCTIONS ON THE VEHICLE							
					A10	A20	A40	A50	A70	C10 - C30	C20	E01
PRO CEE'D II												
1.0 T-GDI	Petrol	74	07/15-07/18	G3LC						9.6538 C10		
All engines	x 3, COIL ON PLUG											
1.0 T-GDI	Petrol	88	07/15-07/18	G3LC						9.6538 C10		
All engines	x 3, COIL ON PLUG											
1.4 CVVT	Petrol	73	03/13-07/15	G4FA						9.6443 C10		
All engines	x 4, COIL ON PLUG											
1.4 CVVT	Petrol	74	07/13-07/18	G4FA						9.6443 C10		
All engines	x 4, COIL ON PLUG											
1.4 MPI	Petrol	73	07/13-07/18	G4LC								
All engines	->year 01/05/15, x 4, COIL ON PLUG									9.6443 C10		
All engines	01/06/15 ->, x 4, COIL ON PLUG									9.6522 C10		
1.4 MPI	Petrol	74	04/15-07/18	G4LC						9.6522 C10		
All engines	x 4, COIL ON PLUG											
1.6 CVVT	Petrol	95	03/13-07/18	G4FC						9.6443 C10		
All engines	x 4, COIL ON PLUG											
1.6 GDI	Petrol	99	03/13-07/18	G4FD						9.6511 C10		
All engines	x 4, COIL ON PLUG											
PROCEED												
1.0 T-GDI	Petrol	88	10/18->	G3LC						9.6538 C10		
All engines	x 3, COIL ON PLUG											
QUORIS												
3.8	Petrol	213	01/13->	G6DK						9.6392 C10		
All engines	x 6, COIL ON PLUG											
3.8	Petrol	216	03/17->	G6DK						9.6392 C10		
All engines	x 6, COIL ON PLUG											
3.8 GDI	Petrol	246	04/15->	G6DJ						9.6392 C10		
All engines	x 6, COIL ON PLUG											
5.0 GDI	Petrol	312	05/15->	G8BE						9.6456 C10		
All engines	x 8, COIL ON PLUG											
RIO I												
1.3	Petrol	55	08/00-02/05	A3E								4.9851
All engines												

A10	CONDENSER	**A20**	CONTACT SET	**A40**	DISTRIBUTOR CAP	**A50**	ROTOR	**A70**	PICK-UP
C10	COIL	**C20**	IGNITION MODULE	**C30**	ELECTRONIC IGNITION KIT	**E01**	IGNITION CABLE SET		

The present application list is a brief version. For the detailed information about the possibility of installation on a specific vehicle, please refer to our web-catalogue http://catalogo.facet.eu/

Vehicle	alim.	kW	Date	Engine	FUNCTIONS ON THE VEHICLE: A10	A20	A40	A50	A70	C10 - C30	C20	E01
1.3	Petrol	60	08/00-02/05	**A3E**								4.9851
1.5 16V	Petrol	71	09/02-02/05	**A5D**								4.7239
1.5 16V	Petrol	72	08/00-02/05	**A5D**								4.7239
1.6 [CAN] [USA]	Petrol	0	06/00-02/05	--								4.7239
RIO II												
1.4	Petrol	55	01/10-12/11	**G4EE**						9.6482 C10 9.6484 C10		
1.4 16V	Petrol	71	03/05-12/11	**G4EE**						9.6482 C10 9.6484 C10		4.7111
1.6 16V	Petrol	82	03/05-12/11	**G4ED**								4.7111
1.6 CVVT	Petrol	82	03/05-12/11	**G4ED**								4.7111
RIO III												
1.2	Petrol	51	09/11-12/17	**G4LA**						9.6479 C10		
1.2 CVVT	Petrol	62	11/14-12/17	**G4LA**						9.6479 C10 9.6512 C10		
1.2 CVVT	Petrol	63	04/15-12/17	**G4LA**						9.6479 C10 9.6512 C10		
1.2 CVVT	Petrol	64	11/14-12/17	**G4LA**						9.6479 C10 9.6512 C10		

Engine	Information
All engines	
All engines	Fitting Position:for cylinder 1, Fitting Position:for cylinder 4, x 1, D.I.S.
All engines	Fitting Position:for cylinder 2, Fitting Position:for cylinder 3, x 1, D.I.S.
All engines	x 1, D.I.S.
All engines	Fitting Position:for cylinder 1-2, Fitting Position:for cylinder 3-4, x 4, -start-stop function, x 1, COIL ON PLUG, D.I.S.
All engines	x 4, +start-stop function, COIL ON PLUG
All engines	Fitting Position:for cylinder 1-2, Fitting Position:for cylinder 3-4, x 4, -start-stop function, x 1, COIL ON PLUG, -start-stop function, D.I.S.
All engines	x 1, x 4, D.I.S., -start-stop function, COIL ON PLUG

A10	CONDENSER	**A20**	CONTACT SET	**A40**	DISTRIBUTOR CAP	**A50**	ROTOR	**A70**	PICK-UP
C10	COIL	**C20**	IGNITION MODULE	**C30**	ELECTRONIC IGNITION KIT	**E01**	IGNITION CABLE SET		

The present application list is a brief version. For the detailed information about the possibility of installation on a specific vehicle, please refer to our web-catalogue http://catalogo.facet.eu/

Vehicle	alim.	kW	Date	Engine	FUNCTIONS ON THE VEHICLE							
					A10	A20	A40	A50	A70	C10 - C30	C20	E01
1.25 CVVT	Petrol	63	09/11-12/17	G4LA								
All engines				Fitting Position:for cylinder 1-2, Fitting Position:for cylinder 3-4, x 1, x 4, D.I.S., -start-stop function, x 1, COIL ON PLUG, D.I.S.						9.6479 C10		
All engines				x 4, +start-stop function, COIL ON PLUG						9.6512 C10		
1.25 CVVT	Petrol	65	06/11-12/17	G4LA								
All engines				Fitting Position:for cylinder 1-2, Fitting Position:for cylinder 2, x 4, Fitting Position:for cylinder 3, -start-stop function, x 1, COIL ON PLUG, D.I.S., x 1, D.I.S.						9.6479 C10		
All engines				Qty: 2, -start-stop function, without fastening clamp						9.6479 C10		
All engines				+start-stop function, Qty: 4						9.6512 C10		
All engines				x 4, +start-stop function, COIL ON PLUG						9.6512 C10		
1.25 LPG	Petrol/ Liquified Petro-leum Gas (LPG)	63	09/11-12/17	G4LA								
All engines				Fitting Position:for cylinder 1, Fitting Position:for cylinder 2, x 4, Fitting Position:for cylinder 3, Fitting Position:for cylinder 4, -start-stop function, COIL ON PLUG, x 1, -start-stop function, D.I.S.						9.6479 C10		
All engines				x 4, +start-stop function, COIL ON PLUG						9.6512 C10		
1.4 CVVT	Petrol	78	10/11->	G4FA								
All engines				Qty: 4						9.6443 C10		
1.4 CVVT	Petrol	79	06/11-12/17	G4FA								
All engines				x 4, COIL ON PLUG						9.6443 C10		
1.4 CVVT	Petrol	80	09/11->	G4FA								
All engines				x 4, COIL ON PLUG						9.6443 C10		
1.6 CVVT	Petrol	90	06/12-12/17	G4FC								
All engines				x 4, COIL ON PLUG						9.6443 C10		
RIO IV												
1.0 T-GDI 100	Petrol	74	01/17->	G3LC, G3LE								
All engines				x 3, COIL ON PLUG						9.6538 C10		
1.0 T-GDI 100 Eco-Dynamics+	Petrol/ Electric	74	02/17->	G3LF								
All engines				x 3, COIL ON PLUG						9.6538 C10		
1.0 T-GDI 120	Petrol	88	01/17->	G3LC								
All engines				x 3, COIL ON PLUG						9.6538 C10		
1.25	Petrol	62	01/17->	G4LA								
All engines				x 4, COIL ON PLUG						9.6512 C10		
1.4	Petrol	73	01/17->	G4LC								
All engines				x 4, COIL ON PLUG						9.6522 C10		

A10	CONDENSER	A20	CONTACT SET	A40	DISTRIBUTOR CAP	A50	ROTOR	A70	PICK-UP
C10	COIL	C20	IGNITION MODULE	C30	ELECTRONIC IGNITION KIT	E01	IGNITION CABLE SET		

The present application list is a brief version. For the detailed information about the possibility of installation on a specific vehicle, please refer to our web-catalogue http://catalogo.facet.eu/

Vehicle	alim.	kW	Date	Engine	FUNCTIONS ON THE VEHICLE: A10	A20	A40	A50	A70	C10 - C30	C20	E01
1.4	Petrol	74	01/17->	G4LC						9.6522 C10		
1.6	Petrol	90	01/17->	G4FG						9.6443 C10		

SEPHIA

Vehicle	alim.	kW	Date	Engine	A10	A20	A40	A50	A70	C10 - C30	C20	E01
1.5 i 16V	Petrol	0	09/97->	--								4.9841
1.6 i 16V	Petrol	0	07/00->	--								4.7239
1.8 i 16V	Petrol	0	09/97->	--								4.9841

SEPHIA I

Vehicle	alim.	kW	Date	Engine	A10	A20	A40	A50	A70	C10 - C30	C20	E01
1.5 i	Petrol	59	02/96-10/97	B5								4.9841
1.6 i	Petrol	59	09/93-10/97	B6			2.8322/21					
												4.9398
1.8 i 16V	Petrol	0	01/95-10/97	--								4.9841
1.8 i 16V	Petrol	82	01/95-10/97	OK24N, OK26Y								4.9841

SHUMA I

Vehicle	alim.	kW	Date	Engine	A10	A20	A40	A50	A70	C10 - C30	C20	E01
1.5	Petrol	59	03/96-12/98	OK280								4.9841
1.5 i 16V	Petrol	65	10/97-10/01	BFD, ZY-VE								4.9841
1.6	Petrol	75	01/01-12/01	GA6D								4.7239
1.8 i 16V	Petrol	81	10/97-03/01	T8								4.9841

SHUMA II

Vehicle	alim.	kW	Date	Engine	A10	A20	A40	A50	A70	C10 - C30	C20	E01
1.6	Petrol	75	05/01-08/04	GA6D								4.7239

Engine	Information	A10	A20	A40	A50	A70	C10 - C30	C20	E01
All engines	x 4, COIL ON PLUG						9.6522 C10		
All engines	euro 5, x 4, COIL ON PLUG, x 4, COIL ON PLUG						9.6443 C10		
All engines									4.9841
All engines									4.7239
All engines									4.9841
All engines									4.9841
All engines	version Mitsubishi			2.8322/21					
All engines									4.9398
All engines									4.9841
All engines									4.9841
All engines									4.9841
All engines									4.9841
All engines									4.7239
All engines									4.9841
All engines									4.7239

A10	CONDENSER	A20	CONTACT SET	A40	DISTRIBUTOR CAP	A50	ROTOR	A70	PICK-UP
C10	COIL	C20	IGNITION MODULE	C30	ELECTRONIC IGNITION KIT	E01	IGNITION CABLE SET		

The present application list is a brief version. For the detailed information about the possibility of installation on a specific vehicle, please refer to our web-catalogue http://catalogo.facet.eu/

Vehicle	alim.	kW	Date	Engine	FUNCTIONS ON THE VEHICLE A10	A20	A40	A50	A70	C10 - C30	C20	E01
1.8	Petrol	81	05/01-06/04	T8								
Engine: All engines — Information:												4.9841
1.8	Petrol	84	04/03-08/04	T8								
Engine: All engines — Information:												4.9841
SORENTO I												
3.3 V6	Petrol	177	12/06->	--								
Engine: All engines — Information: Qty: 6										9.6392 C10		
3.3 V6 4WD	Petrol	182	02/07-12/11	G6DB								
Engine: All engines — Information: x 6, COIL ON PLUG										9.6392 C10		
SORENTO II												
2.4 CVVT	Petrol	128	11/09-12/15	G4KE								
Engine: All engines — Information: x 4, COIL ON PLUG										9.6456 C10		
2.4 CVVT	Petrol	141	10/12-12/15	G4KJ								
Engine: All engines — Information: x 4, COIL ON PLUG										9.6456 C10		
2.4 CVVT 4WD	Petrol	128	11/09-12/15	G4KE								
Engine: All engines — Information: x 4, COIL ON PLUG										9.6456 C10		
2.4 CVVT 4WD	Petrol	141	10/12-12/15	G4KJ								
Engine: All engines — Information: x 4, COIL ON PLUG										9.6456 C10		
2.4 GDI	Petrol	141	10/12-12/15	G4KJ								
Engine: All engines — Information: x 4, COIL ON PLUG										9.6456 C10		
2.4 GDI 4WD	Petrol	141	10/12-12/15	G4KJ								
Engine: All engines — Information: x 4, COIL ON PLUG										9.6456 C10		
2.4 LPG	Petrol/ Liquified Petro-leum Gas (LPG)	126	04/10-12/15	G4KE								
Engine: All engines — Information: x 4, COIL ON PLUG										9.6456 C10		
2.4 LPG 4WD	Petrol/ Liquified Petro-leum Gas (LPG)	126	04/10-12/15	G4KE								
Engine: All engines — Information: x 4, COIL ON PLUG										9.6456 C10		
3.3 GDI	Petrol	0	10/12->	--								
Engine: All engines — Information: Qty: 6										9.6392 C10		

A10	CONDENSER	A20	CONTACT SET	A40	DISTRIBUTOR CAP	A50	ROTOR	A70	PICK-UP
C10	COIL	C20	IGNITION MODULE	C30	ELECTRONIC IGNITION KIT	E01	IGNITION CABLE SET		

The present application list is a brief version. For the detailed information about the possibility of installation on a specific vehicle, please refer to our web-catalogue http://catalogo.facet.eu/

Vehicle	alim.	kW	Date	Engine	FUNCTIONS ON THE VEHICLE							
					A10	A20	A40	A50	A70	C10 - C30	C20	E01
3.5	Petrol	204	05/13-12/15	G6DC								
All engines	Qty: 6									9.6392 C10		
3.5	Petrol	207	11/09->	G6DC								
All engines	Qty: 6									9.6392 C10		
3.5 4WD	Petrol	203	11/09->	G6DC								
All engines	Qty: 6									9.6392 C10		
3.5 4WD	Petrol	204	05/13-12/15	G6DC								
All engines	Qty: 6									9.6392 C10		
CVVT	Petrol	128	06/09-12/15	G4KE								
All engines	x 4, COIL ON PLUG									9.6456 C10		
CVVT 4WD	Petrol	128	06/09-12/15	G4KE								
All engines	x 4, COIL ON PLUG									9.6456 C10		
SORENTO III												
3.5 D-CVVT	Petrol	183	12/18->	G6DC								
All engines	x 6, COIL ON PLUG									9.6392 C10		
3.5 D-CVVT 4WD	Petrol	183	12/18->	G6DC								
All engines	x 6, COIL ON PLUG									9.6392 C10		
SOUL I												
1.6	Petrol	91	09/09-12/14	G4FC								
All engines	x 4, COIL ON PLUG									9.6443 C10		
1.6 CVVT	Petrol	77	02/09-12/11	G4FC								
All engines	x 4, COIL ON PLUG									9.6443 C10		
1.6 CVVT	Petrol	93	02/09-12/11	G4FC								
All engines	x 4, COIL ON PLUG									9.6443 C10		
1.6 CVVT	Petrol	95	06/11-12/14	G4FC								
All engines	x 4, COIL ON PLUG									9.6443 C10		
1.6 Flex	Flexfuel	94	01/11->	--								
All engines	Qty: 4, no specific info conc. application available									9.6443, 9.6511 C10		
1.6 GDI	Petrol	103	06/11-12/14	G4FD								
All engines	x 4, COIL ON PLUG									9.6511 C10		

A10	CONDENSER	A20	CONTACT SET	A40	DISTRIBUTOR CAP	A50	ROTOR	A70	PICK-UP
C10	COIL	C20	IGNITION MODULE	C30	ELECTRONIC IGNITION KIT	E01	IGNITION CABLE SET		

The present application list is a brief version. For the detailed information about the possibility of installation on a specific vehicle, please refer to our web-catalogue http://catalogo.facet.eu/

Vehicle	alim.	kW	Date	Engine	FUNCTIONS ON THE VEHICLE A10	A20	A40	A50	A70	C10 - C30	C20	E01
1.6 LPG	Petrol/ Liquified Petro-leum Gas (LPG)	87	06/11-12/14	G4FC								
Engine: All engines	Information: x 4, COIL ON PLUG									9.6443 C10		
1.6 LPG	Petrol/ Liquified Petro-leum Gas (LPG)	92	02/09-12/11	G4FC								
Engine: All engines	Information: x 4, COIL ON PLUG									9.6443 C10		
SOUL II												
1.6 CVVT	Petrol	91	02/14->	G4FG								
Engine: All engines	Information: x 4, COIL ON PLUG									9.6443 C10		
1.6 GDI	Petrol	97	02/14->	G4FD								
Engine: All engines	Information: x 4, COIL ON PLUG									9.6511 C10		
1.6 LPG	Petrol/ Liquified Petro-leum Gas (LPG)	96	12/14->	G4FG								
Engine: All engines	Information: x 4, COIL ON PLUG									9.6443 C10		
SOUL III												
1.6 MPi	Petrol	91	01/19->	G4FG								
Engine: All engines	Information: x 4, COIL ON PLUG									9.6443 C10		
SPECTRA												
1.5 i	Petrol	0	09/97->	--								
Engine: All engines	Information:											4.9841
1.5 i 16V	Petrol	65	09/97->	--								
Engine: All engines	Information:											4.9841
1.6 i 16V	Petrol	75	07/00->	--								
Engine: All engines	Information:											4.7239
1.8 i 16V	Petrol	93	09/97->	--								
Engine: All engines	Information:											4.9841
SPORTAGE I												
2.0 4WD	Petrol	70	06/95-11/98	FE (8V)								
Engine: All engines	Information: x 1, D.I.S., connector type, saw teeth									9.6068 C10		
2.0 i 4WD	Petrol	70	04/94-08/99	FE (8V)								
Engine: All engines	Information: x 1, D.I.S., connector type, saw teeth									9.6068 C10		

A10	CONDENSER	A20	CONTACT SET	A40	DISTRIBUTOR CAP	A50	ROTOR	A70	PICK-UP
C10	COIL	C20	IGNITION MODULE	C30	ELECTRONIC IGNITION KIT	E01	IGNITION CABLE SET		

The present application list is a brief version. For the detailed information about the possibility of installation on a specific vehicle, please refer to our web-catalogue http://catalogo.facet.eu/

Vehicle	alim.	kW	Date	Engine	FUNCTIONS ON THE VEHICLE A10	A20	A40	A50	A70	C10 - C30	C20	E01

SPORTAGE II

				ENGINE
2.0	Petrol	122	01/09-05/10	G4KD

Engine	Information	A10	A20	A40	A50	A70	C10 - C30		C20	E01
All engines	x 1, D.I.S.						9.6481	C10		

				ENGINE
2.0 16V 4WD	Petrol	104	09/04->	G4GC

Engine	Information	A10	A20	A40	A50	A70	C10 - C30		C20	E01
All engines	x 1, D.I.S.						9.6481	C10		
All engines										4.9385

				ENGINE
2.0 i 16V	Petrol	104	09/04->	G4GC

Engine	Information	A10	A20	A40	A50	A70	C10 - C30		C20	E01
All engines	x 1, D.I.S.						9.6481	C10		
All engines										4.9385

				ENGINE
2.0 LPG	Petrol/ Liquified Petro-leum Gas (LPG)	101	06/09-05/10	G4GC

Engine	Information	A10	A20	A40	A50	A70	C10 - C30		C20	E01
All engines	x 1, D.I.S.						9.6481	C10		

				ENGINE
2.7 V6 4WD	Petrol	129	09/04->	G6BA

Engine	Information	A10	A20	A40	A50	A70	C10 - C30		C20	E01
All engines										4.7236

SPORTAGE III

				ENGINE
1.6 GDI	Petrol	99	02/11->	G4FD

Engine	Information	A10	A20	A40	A50	A70	C10 - C30		C20	E01
All engines	x 4, COIL ON PLUG						9.6511	C10		

				ENGINE
1.6 LPG	Petrol/ Liquified Petro-leum Gas (LPG)	99	01/14-12/15	G4FD

Engine	Information	A10	A20	A40	A50	A70	C10 - C30		C20	E01
All engines	x 4, COIL ON PLUG						9.6511	C10		

				ENGINE
2.0 CVVT	Petrol	110	06/10-12/13	G4KD

Engine	Information	A10	A20	A40	A50	A70	C10 - C30		C20	E01
All engines	x 4, COIL ON PLUG						9.6456	C10		

				ENGINE
2.0 CVVT	Petrol	120	07/10->	G4KD

Engine	Information	A10	A20	A40	A50	A70	C10 - C30		C20	E01
All engines	x 4, COIL ON PLUG						9.6456	C10		

				ENGINE
2.0 CVVT	Petrol	122	07/10->	G4KD

Engine	Information	A10	A20	A40	A50	A70	C10 - C30		C20	E01
All engines	x 4, COIL ON PLUG						9.6456	C10		

				ENGINE
2.0 CVVT AWD	Petrol	110	06/10-12/13	G4KD

Engine	Information	A10	A20	A40	A50	A70	C10 - C30		C20	E01
All engines	x 4, COIL ON PLUG						9.6456	C10		

				ENGINE
2.0 CVVT AWD	Petrol	120	07/10->	G4KD

Engine	Information	A10	A20	A40	A50	A70	C10 - C30		C20	E01
All engines	x 4, COIL ON PLUG						9.6456	C10		

				ENGINE
2.0 CVVT AWD	Petrol	122	07/10->	G4KD, G4NC

Engine	Information	A10	A20	A40	A50	A70	C10 - C30		C20	E01
Eng. G4KD	x 4, COIL ON PLUG						9.6456	C10		

A10	CONDENSER	A20	CONTACT SET	A40	DISTRIBUTOR CAP	A50	ROTOR	A70	PICK-UP
C10	COIL	C20	IGNITION MODULE	C30	ELECTRONIC IGNITION KIT	E01	IGNITION CABLE SET		

The present application list is a brief version. For the detailed information about the possibility of installation on a specific vehicle, please refer to our web-catalogue http://catalogo.facet.eu/

Vehicle	alim.	kW	Date	Engine	FUNCTIONS ON THE VEHICLE A10	A20	A40	A50	A70	C10 - C30	C20	E01
2.0 CVVT AWD	Petrol	122	07/10->	G4KD, G4NC								
Engine: Eng. G4NC — Information: Qty: 4										9.6456 C10		
2.4 i 4WD	Petrol	130	08/10->	G4KE								
Engine: All engines — Information: Qty: 4										9.6456 C10		
SPORTAGE IV												
1.6 GDI	Petrol	97	09/15->	G4FD								
Engine: All engines — Information: x 4, COIL ON PLUG										9.6511 C10		
1.6 LPG	Petrol/ Liquified Petro-leum Gas (LPG)	93	07/20->	G4FD								
Engine: All engines — Information: x 4, COIL ON PLUG										9.6511 C10		
STONIC												
1.0 T-GDi	Petrol	74	08/18->	G3LC								
Engine: All engines — Information: x 3, COIL ON PLUG										9.6538 C10		
1.0 T-GDi	Petrol	88	07/17->	G3LC								
Engine: All engines — Information: x 3, COIL ON PLUG										9.6538 C10		
1.2 CVVT	Petrol	62	07/17->	G4LA								
Engine: All engines — Information: x 4, COIL ON PLUG										9.6512 C10		
1.4 CVVT	Petrol	73	07/17->	G4LC								
Engine: All engines — Information: x 4, COIL ON PLUG										9.6522 C10		
1.4 LPG	Petrol/ Liquified Petro-leum Gas (LPG)	71	11/18->	G4LC								
Engine: All engines — Information: x 4, COIL ON PLUG										9.6522 C10		
TOWNER												
0.8 Gasoline	Petrol	31	10/97->	--								
Engine: All engines — Information:										9.6119 C10		
VENGA												
1.4 CVVT	Petrol	66	02/10->	G4FA, G4FA-L								
Engine: Eng. G4FA — Information: x 4, COIL ON PLUG										9.6443 C10		
Engine: Eng. G4FA-L — Information: Qty: 4										9.6443 C10		
1.4 LPG	Petrol/ Liquified Petro-leum Gas (LPG)	66	02/10->	G4FA								
Engine: All engines — Information: x 4, COIL ON PLUG										9.6443 C10		

A10	CONDENSER	**A20**	CONTACT SET	**A40**	DISTRIBUTOR CAP	**A50**	ROTOR	**A70**	PICK-UP
C10	COIL	**C20**	IGNITION MODULE	**C30**	ELECTRONIC IGNITION KIT	**E01**	IGNITION CABLE SET		

The present application list is a brief version. For the detailed information about the possibility of installation on a specific vehicle, please refer to our web-catalogue http://catalogo.facet.eu/

Vehicle	alim.	kW	Date	Engine	FUNCTIONS ON THE VEHICLE							
					A10	A20	A40	A50	A70	C10 - C30	C20	E01
1.6 CVVT	Petrol	92	02/10->	ENGINE G4FC								
Engine: All engines — Information: x 4, COIL ON PLUG										9.6443 C10		
CVVT	Petrol	66	04/15->	ENGINE G4FA								
Engine: All engines — Information: x 4, COIL ON PLUG										9.6443 C10		
CVVT	Petrol	92	02/15->	ENGINE G4FC								
Engine: All engines — Information: x 4, COIL ON PLUG										9.6443 C10		
XCEED												
1.0 T-GDI	Petrol	88	06/19->	ENGINE G3LC								
Engine: All engines — Information: x 3, COIL ON PLUG										9.6538 C10		
1.6 GDI Hybrid	Petrol/ Electric	104	12/19->	ENGINE G4LE								
Engine: All engines — Information: x 4, COIL ON PLUG										9.6547 C10		
1.6 GDI Hybrid	Petrol/ Electric	77	12/19->	ENGINE G4LE								
Engine: All engines — Information: x 4, COIL ON PLUG										9.6547 C10		

A10	CONDENSER	A20	CONTACT SET	A40	DISTRIBUTOR CAP	A50	ROTOR	A70	PICK-UP
C10	COIL	C20	IGNITION MODULE	C30	ELECTRONIC IGNITION KIT	E01	IGNITION CABLE SET		

The present application list is a brief version. For the detailed information about the possibility of installation on a specific vehicle, please refer to our web-catalogue http://catalogo.facet.eu/

Vehicle	alim.	kW	Date	Engine	FUNCTIONS ON THE VEHICLE							
					A10	A20	A40	A50	A70	C10 - C30	C20	E01
LARGUS												
1.6	Petrol	62	03/12->	K7M						9.6496 C10		
All engines	x 1, D.I.S.											
1.6	Petrol	64	04/16->	11189						9.6496 C10		
All engines	x 1, D.I.S.											
1.6	Petrol	75	04/16->	K4M						9.6332 C10		
All engines	x 4, COIL ON PLUG											
1.6	Petrol	77	03/12->	K4M						9.6332 C10		
All engines	x 4, COIL ON PLUG											
1.6	Petrol	78	09/17->	21129						9.6332 C10		
All engines	x 4, COIL ON PLUG											
NIVA I												
1600	Petrol	56	12/76-12/93	BA3 2121								
All engines	version Russian distributor					1.7270						
All engines	version Hungarian distributor					1.7271						
All engines	version U.D.S.S.R.						2.8625	3.8714RS				
All engines										9.6001D C10		4.8511
RIVA												
1.5	Petrol	55	01/85->	--								
All engines						1.7270	2.8625	3.8714RS				
1.6	Petrol	63	01/85->	--								
All engines						1.7270	2.8625	3.8714RS				
SAMARA												
1.5	Petrol	52	01/97->	--								
All engines	version U.D.S.S.R.						2.8627PHT	3.8716RS				
1100	Petrol	39	02/88-12/94	BA3 21081								
All engines	version U.D.S.S.R.						2.8627PHT	3.8716RS				
1300	Petrol	48	01/86-12/94	BA3 2108								
All engines	version U.D.S.S.R.						2.8627PHT	3.8716RS				
1500	Petrol	53	09/87-12/96	BA3 21083								
All engines	version U.D.S.S.R.						2.8627PHT	3.8716RS				
VESTA												
1.6	Petrol	83	11/19->	H4M						9.6513 C10		
All engines	x 4, COIL ON PLUG											

A10	CONDENSER	A20	CONTACT SET	A40	DISTRIBUTOR CAP	A50	ROTOR	A70	PICK-UP
C10	COIL	C20	IGNITION MODULE	C30	ELECTRONIC IGNITION KIT	E01	IGNITION CABLE SET		

The present application list is a brief version. For the detailed information about the possibility of installation on a specific vehicle, please refer to our web-catalogue http://catalogo.facet.eu/

Vehicle	alim.	kW	Date	Engine	FUNCTIONS ON THE VEHICLE							
					A10	A20	A40	A50	A70	C10 - C30	C20	E01
A 112												
				ENGINE								
0.9 Junior	Petrol	29	03/81-06/86	A112 A5.000								
All engines	version Ducellier				0.0323	1.3691/1	2.7658PHT	3.7683RS				
All engines										9.6001D C10		
				ENGINE								
1.0 Abarth	Petrol	51	03/78-02/84	A112 A2.000								
All engines	version Marelli						2.8193	3.8254RS	8.4961/1			
BETA												
				ENGINE								
1600	Petrol	74	08/73-07/82	828 B.000								
All engines	version Bosch						2.7479PHT	3.7525RS				
All engines	version Marelli							3.8254RS	8.4963/1			
All engines										9.6003 C10		
DEDRA												
				ENGINE								
1.6	Petrol	66	10/94-07/99	159 B9.000								
All engines												4.8888
				ENGINE								
1.6 16V	Petrol	76	01/96-07/99	182 A4.000								
All engines										9.6245 C10		4.9503
				ENGINE								
1.6 i.e.	Petrol	55	04/93-07/99	835 C1.000								
All engines										9.6068 C10		4.8655
				ENGINE								
1.6 i.e.	Petrol	57	08/89-03/93	835 A1.046								
All engines	->eng. 7852632, version Marelli						2.8204PHT					
All engines	eng. type 7852632 ->, version Marelli						2.8215PHT					
All engines	version Marelli, no specific info conc. application available							3.8255RS, 3.8259				
All engines										9.6048 C10		
				ENGINE								
1.6 i.e.	Petrol	66	08/89-06/94	835 A1.000								
All engines	version Marelli						2.8204PHT					
All engines	version Marelli, no specific info conc. application available							3.8255RS, 3.8259				
All engines										9.8003 C30		
				ENGINE								
1.6 LE Cat	Petrol	66	07/94-07/99	159 B9.000								
All engines												4.8888
				ENGINE								
1.8 i.e.	Petrol	66	08/93-07/99	835 C5.000								
All engines	version Marelli						2.8215PHT	3.8260	8.4977/1			
All engines										9.8003 C30		4.8692
				ENGINE								
1.8 i.e.	Petrol	74	07/94-07/99	836 A5.000								
All engines	Qty: 2									9.6046 C10		
All engines												4.8889
				ENGINE								
1.8 i.e.	Petrol	77	09/89-07/99	835 A2.046								
All engines	version Marelli						2.8215PHT	3.8260	8.4977/1			

A10	CONDENSER	**A20**	CONTACT SET	**A40**	DISTRIBUTOR CAP	**A50**	ROTOR	**A70**	PICK-UP
C10	COIL	**C20**	IGNITION MODULE	**C30**	ELECTRONIC IGNITION KIT	**E01**	IGNITION CABLE SET		

The present application list is a brief version. For the detailed information about the possibility of installation on a specific vehicle, please refer to our web-catalogue http://catalogo.facet.eu/

Vehicle	alim.	kW	Date	Engine	FUNCTIONS ON THE VEHICLE							
					A10	A20	A40	A50	A70	C10 - C30	C20	E01
1.8 i.e.	Petrol	77	09/89-07/99	**ENGINE 835 A2.046**								
All engines										9.8003 C30		4.8692
1.8 i.e.	Petrol	80	09/89-06/94	**ENGINE 835 A2.000**								
All engines	version Marelli						2.8215PHT	3.8260	8.4977/1			
All engines										9.8003 C30		4.8692
2.0 16V	Petrol	102	07/94-07/99	**ENGINE 836 A3.000**								
All engines	version Marelli						2.8214PHT	3.8260	8.4977/1			
All engines										9.8003 C30		4.8650
2.0 HF Integrale	Petrol	124	11/90-07/94	**ENGINE 835 A7.046**								
All engines	version Marelli						2.8215PHT	3.8260	8.4977/1			
All engines										9.8003 C30		4.8692
2.0 i.e.	Petrol	83	09/89-07/99	**ENGINE 835 A5.046**								
All engines	01/07/94 ->, version Marelli, +automatic transmission, eng. type 1339290 ->						2.8214PHT					
All engines	version Marelli							3.8260	8.4977/1			
All engines										9.8003 C30		
All engines	+automatic transmission, ->eng. 1303624											4.8692
2.0 i.e.	Petrol	86	09/89-07/92	**ENGINE 835 A5.000**								
All engines	version Marelli						2.8215PHT	3.8260	8.4977/1			
All engines										9.8003 C30		4.8692
2.0 i.e. Turbo	Petrol	119	04/91-07/99	**ENGINE 835 A8.046**								
All engines	version Marelli						2.8215PHT	3.8260	8.4977/1			
All engines										9.8003 C30		4.8692
2.0 i.e. Turbo Integrale	Petrol	121	04/90-08/91	**ENGINE 835 A7.000**								
All engines	version Marelli						2.8215PHT	3.8260	8.4977/1			
All engines										9.8003 C30		4.8692
2.0 Integrale	Petrol	102	07/94-07/99	**ENGINE 836 A3.000**								
All engines	version Marelli						2.8214PHT	3.8260	8.4977/1			
All engines										9.8003 C30		4.8650
2.0 Turbo	Petrol	130	11/90-06/94	**ENGINE 835 A8.000**								
All engines	version Marelli						2.8215PHT	3.8260	8.4977/1			
All engines										9.8003 C30		4.8692
DELTA I												
1.1	Petrol	47	01/86-12/90	**ENGINE 831 B8.000**								
All engines	version Marelli						2.8201PHT	3.8247RS	8.4976M			
All engines										9.6058 C10	9.4020	4.8354

A10	CONDENSER	**A20**	CONTACT SET	**A40**	DISTRIBUTOR CAP	**A50**	ROTOR	**A70**	PICK-UP
C10	COIL	**C20**	IGNITION MODULE	**C30**	ELECTRONIC IGNITION KIT	**E01**	IGNITION CABLE SET		

The present application list is a brief version. For the detailed information about the possibility of installation on a specific vehicle, please refer to our web-catalogue http://catalogo.facet.eu/

Vehicle	alim.	kW	Date	Engine	FUNCTIONS ON THE VEHICLE A10	A20	A40	A50	A70	C10 - C30		C20	E01
1.3	Petrol	55	09/79-08/92	ENGINE 831 A2.000, 831 B.000									
All engines				version Marelli, no specific info conc. application available			2.8201PHT, 2.8204PHT						
All engines				->eng. 6651557, version Marelli				3.8247RS					
All engines				eng. type 6651557 ->, version Marelli				3.8260					
All engines				version Marelli					8.4976M				
All engines										9.6058	C10	9.4020	4.8354
1.3	Petrol	58	09/83-08/92	ENGINE 831 A2.000									
All engines				version Marelli, no specific info conc. application available			2.8201PHT						
All engines				->eng. 6651557, version Marelli				3.8247RS					
All engines				eng. type 6651557 ->, version Marelli				3.8260					
All engines				version Marelli					8.4976M				
All engines										9.6058	C10	9.4020	4.8354
1.5	Petrol	63	09/79-12/92	ENGINE 831 A1.000, 831 B1.000									
All engines				version Marelli			2.8204PHT	3.8255RS					
All engines										9.6003	C10		
All engines				VET. 6119941 ->, ->VET. 0626853									4.8354
1.6 GT i.e.	Petrol	66	05/87-08/92	ENGINE 149 C2.000									
All engines				version Marelli			2.8215PHT		8.4977/1				
All engines				version Marelli, no specific info conc. application available				3.8257RS, 3.8260					
1.6 GT i.e.	Petrol	80	08/86-08/88	ENGINE 831 B7.000									
All engines				version Marelli			2.8215PHT		8.4977/1				
All engines				version Marelli, no specific info conc. application available				3.8257RS, 3.8260					
All engines				VET. 0651166 ->									4.8398
1.6 HF Turbo	Petrol	103	08/86-08/88	ENGINE 831 B3.000									
All engines				version Marelli			2.8215PHT		8.4977/1				
All engines				->eng. 957187, version Marelli				3.8257RS					
All engines				eng. type 957187 ->, version Marelli				3.8260					
1.6 HF Turbo	Petrol	97	04/87-03/89	ENGINE 831 B7.046									
All engines				version Marelli			2.8215PHT		8.4977/1				
All engines				->eng. 957187, version Marelli				3.8257RS					
All engines				eng. type 957187 ->, version Marelli				3.8260					
2.0 16V HF Evo Integrale	Petrol	155	06/93-01/94	ENGINE 831 E5.000, 831 E5.046									
Eng. 831 E5.000				version Marelli			2.8215PHT	3.8260	8.4977/1				
Eng. 831 E5.046				Qty: 2						9.6046	C10		
Eng. 831 E5.000													4.8471
2.0 16V HF Integrale	Petrol	144	03/89-09/91	ENGINE 831 D5.000									
All engines				version Marelli			2.8215PHT	3.8257RS	8.4977/1				
All engines										9.8003	C30		4.8471

A10	CONDENSER	A20	CONTACT SET	A40	DISTRIBUTOR CAP	A50	ROTOR	A70	PICK-UP
C10	COIL	C20	IGNITION MODULE	C30	ELECTRONIC IGNITION KIT	E01	IGNITION CABLE SET		

The present application list is a brief version. For the detailed information about the possibility of installation on a specific vehicle, please refer to our web-catalogue http://catalogo.facet.eu/

Vehicle	alim.	kW	Date	Engine	FUNCTIONS ON THE VEHICLE							
					A10	A20	A40	A50	A70	C10 - C30	C20	E01
2.0 HF Integrale	Petrol	122	11/86-08/88	**ENGINE 831 B5.000**								

Engine	Information	A10	A20	A40	A50	A70	C10 - C30		C20	E01
All engines	version Marelli			2.8215PHT	3.8257RS	8.4977/1				

2.0 HF Integrale	Petrol	130	12/86-12/92	**ENGINE 831 C5.046**

Engine	Information	A10	A20	A40	A50	A70	C10 - C30		C20	E01
All engines	version Marelli			2.8215PHT		8.4977/1				
All engines	->year 30/06/91, version Marelli				3.8257RS					
All engines	01/07/91 ->, version Marelli				3.8260					
All engines	->year 30/06/91						9.8003	C30		4.8471

2.0 HF Integrale	Petrol	133	10/87-12/91	**ENGINE 831 C5.000**

Engine	Information	A10	A20	A40	A50	A70	C10 - C30		C20	E01
All engines	version Marelli			2.8215PHT	3.8257RS	8.4977/1				

DELTA II

1.4 i.e.	Petrol	51	10/94-08/99	**ENGINE 160 A1.046, 836 A4.000**

Engine	Information	A10	A20	A40	A50	A70	C10 - C30		C20	E01
Eng. 160 A1.046	version Marelli			2.8215PHT	3.8259	8.4977/1				
Eng. 160 A1.046							9.6048	C10		
Eng. 836 A4.000							9.6068	C10		4.8655

1.6 i.e.	Petrol	55	06/93-08/99	**ENGINE 835 C1.000**

Engine	Information	A10	A20	A40	A50	A70	C10 - C30		C20	E01
All engines							9.6068	C10		4.8655

1.6 i.e.	Petrol	66	03/96-08/99	**ENGINE 182 A6.000**

Engine	Information	A10	A20	A40	A50	A70	C10 - C30		C20	E01
All engines							9.6245	C10		4.9503

1.6 i.e. 16V	Petrol	76	01/96-08/99	**ENGINE 182 A4.000**

Engine	Information	A10	A20	A40	A50	A70	C10 - C30		C20	E01
All engines							9.6245	C10		4.9503

1.8 i.e.	Petrol	66	07/94-08/99	**ENGINE 835 C4.000, 836 A6.000, 836 C4.000**

Engine	Information	A10	A20	A40	A50	A70	C10 - C30		C20	E01
All engines	Qty: 2						9.6046	C10		
All engines	eng. type 1486839 ->									4.8889

1.8 i.e.	Petrol	74	02/96-08/99	**ENGINE 836 A5.000**

Engine	Information	A10	A20	A40	A50	A70	C10 - C30		C20	E01
All engines	Qty: 2						9.6046	C10		
All engines	eng. type 1486839 ->									4.8889

1.8 i.e.	Petrol	76	06/93-08/99	**ENGINE 835 C2.000**

Engine	Information	A10	A20	A40	A50	A70	C10 - C30		C20	E01
All engines	Qty: 2						9.6046	C10		
All engines	eng. type 1486839 ->									4.8889

1.8 i.e. 16V GT	Petrol	96	03/96-08/99	**ENGINE 183 A1.000**

Engine	Information	A10	A20	A40	A50	A70	C10 - C30		C20	E01
All engines	01/05/98 ->, Qty: 4						9.6284	C10		

2.0 16V	Petrol	102	06/93-08/99	**ENGINE 836 A3.000**

Engine	Information	A10	A20	A40	A50	A70	C10 - C30		C20	E01
All engines	version Marelli			2.8214PHT	3.8260	8.4977/1				
All engines							9.8003	C30		4.8650

A10 CONDENSER	**A20** CONTACT SET	**A40** DISTRIBUTOR CAP	**A50** ROTOR	**A70** PICK-UP
C10 COIL	**C20** IGNITION MODULE	**C30** ELECTRONIC IGNITION KIT	**E01** IGNITION CABLE SET	

The present application list is a brief version. For the detailed information about the possibility of installation on a specific vehicle, please refer to our web-catalogue http://catalogo.facet.eu/

Vehicle	alim.	kW	Date	Engine	FUNCTIONS ON THE VEHICLE							
					A10	A20	A40	A50	A70	C10 - C30	C20	E01
2.0 16V Turbo	Petrol	137	06/93-08/99	**ENGINE 836 A2.000**								
Engine: All engines — Information: Qty: 2										9.6046 C10		
Engine: All engines												4.8456
2.0 16V Turbo	Petrol	142	07/96-08/99	**ENGINE 175 A4.000**								
Engine: All engines — Information: Qty: 2										9.6046 C10		
Engine: All engines												4.8456
DELTA III												
1.4 16V	Petrol	103	07/10-08/14	**ENGINE 198 A7.000**								
Engine: All engines — Information: x 4, COIL ON PLUG										9.6449 C10		
1.8	Petrol	147	01/09-08/14	**ENGINE 939 B1.000**								
Engine: All engines — Information: x 4, COIL ON PLUG										9.6449 C10		
KAPPA												
2.0 16V Turbo	Petrol	151	02/95-10/01	**ENGINE 834 A4.000, 838 A4.000**								
Engine: All engines — Information: x 1, D.I.S., connector type, saw teeth										9.6068 C10		
Engine: Eng. 834 A4.000										9.6068 C10		
Engine: All engines												4.8700
2.0 20V	Petrol	107	10/94-10/01	**ENGINE 838 A1.000**								
Engine: All engines — Information: x 5, COIL ON PLUG, incl. spark plug connector										9.6214 C10		
2.0 20V	Petrol	114	07/96-10/01	**ENGINE 838 A6.000**								
Engine: All engines — Information: ->ch. 2092439, x 5, COIL ON PLUG, incl. spark plug connector										9.6214 C10		
2.0 20V Turbo	Petrol	162	06/98-10/01	**ENGINE 175 A3.000**								
Engine: All engines — Information: x 5, COIL ON PLUG, incl. spark plug connector										9.6214 C10		
2.4 20V	Petrol	129	08/94-10/01	**ENGINE 838 A2.000, 838 A2.027**								
Engine: All engines — Information: x 5, COIL ON PLUG, incl. spark plug connector										9.6214 C10		
3.0 24V	Petrol	150	10/94-10/01	**ENGINE 838 B.000**								
Engine: All engines — Information: x 6, COIL ON PLUG										9.6213 C10		
LYBRA												
1.6	Petrol	76	10/00-10/05	**ENGINE 182 B6.000**								
Engine: All engines — Information: x 1, D.I.S., connector type, saw teeth										9.6245 C10		
Engine: All engines												4.9503
1.6 16V	Petrol	76	07/99-10/05	**ENGINE 182 A4.000**								
Engine: All engines — Information: x 1, D.I.S., connector type, saw teeth										9.6245 C10		
Engine: All engines												4.9503

A10	CONDENSER	**A20**	CONTACT SET	**A40**	DISTRIBUTOR CAP	**A50**	ROTOR	**A70**	PICK-UP
C10	COIL	**C20**	IGNITION MODULE	**C30**	ELECTRONIC IGNITION KIT	**E01**	IGNITION CABLE SET		

The present application list is a brief version. For the detailed information about the possibility of installation on a specific vehicle, please refer to our web-catalogue http://catalogo.facet.eu/

Vehicle	alim.	kW	Date	Engine	FUNCTIONS ON THE VEHICLE A10	A20	A40	A50	A70	C10 - C30	C20	E01
1.8 16V	Petrol	96	07/99-10/05	839 A4.000, 839 A7.000, 839 A9.000								

Engine	Information	A10	A20	A40	A50	A70	C10 - C30		C20	E01
All engines	x 4, COIL ON PLUG, incl. spark plug connector						9.6284	C10		

MUSA

1.4	Petrol	57	09/05-09/12	350 A1.000								

Engine	Information	A10	A20	A40	A50	A70	C10 - C30		C20	E01
All engines	x 1, D.I.S.						9.6323	C10		
All engines										4.7170

1.4	Petrol	66	10/07-09/12	192 B2.000								

Engine	Information	A10	A20	A40	A50	A70	C10 - C30		C20	E01
All engines	x 4, COIL ON PLUG, incl. spark plug connector						9.6342	C10		

1.4	Petrol	70	10/04-09/12	843 A 1.000								

Engine	Information	A10	A20	A40	A50	A70	C10 - C30		C20	E01
All engines	x 4, COIL ON PLUG, incl. spark plug connector						9.6342	C10		

1.4 16V	Petrol	70	01/11-12/12	--								

Engine	Information	A10	A20	A40	A50	A70	C10 - C30		C20	E01
All engines	Qty: 4						9.6342	C10		

1.4 8V	Petrol	57	01/11-12/12	--								

Engine	Information	A10	A20	A40	A50	A70	C10 - C30		C20	E01
All engines							9.6323	C10		4.7170

1.4 LPG	Petrol/ Liquified Petro-leum Gas (LPG)	57	11/10-09/12	350 A1.000								

Engine	Information	A10	A20	A40	A50	A70	C10 - C30		C20	E01
All engines	x 1, D.I.S.						9.6323	C10		

PHEDRA

2.0	Petrol	100	09/02-11/10	RFN, RFN (EW10J4)								

Engine	Information	A10	A20	A40	A50	A70	C10 - C30		C20	E01
Eng. RFN	x 4, COIL ON PLUG						9.6308	C10		
Eng. RFN (EW10J4)							9.6308	C10		

PRISMA

1.3	Petrol	58	01/83-12/89	831 A2.000								

Engine	Information	A10	A20	A40	A50	A70	C10 - C30		C20	E01
All engines	version Marelli			2.8201PHT		8.4976M				
All engines	->year 28/02/88, version Marelli				3.8247RS					
All engines	01/03/88 ->, version Marelli				3.8260					
All engines									9.4020	4.8354

1.5	Petrol	59	05/86-07/89	831 B1.000								

Engine	Information	A10	A20	A40	A50	A70	C10 - C30		C20	E01
All engines	version Marelli			2.8204PHT	3.8255RS					
All engines							9.6003	C10		

1.5	Petrol	63	01/83-04/86	831 A1.000								

Engine	Information	A10	A20	A40	A50	A70	C10 - C30		C20	E01
All engines	version Marelli			2.8204PHT	3.8247RS					

1.6	Petrol	71	08/87-08/88	831 B6.000								

Engine	Information	A10	A20	A40	A50	A70	C10 - C30		C20	E01
All engines	version Marelli			2.8198PHT	3.8255RS					
All engines							9.6003	C10		4.8398

A10	CONDENSER	A20	CONTACT SET	A40	DISTRIBUTOR CAP	A50	ROTOR	A70	PICK-UP
C10	COIL	C20	IGNITION MODULE	C30	ELECTRONIC IGNITION KIT	E01	IGNITION CABLE SET		

The present application list is a brief version. For the detailed information about the possibility of installation on a specific vehicle, please refer to our web-catalogue http://catalogo.facet.eu/

Vehicle	alim.	kW	Date	Engine	FUNCTIONS ON THE VEHICLE A10	A20	A40	A50	A70	C10 - C30	C20	E01
1.6	Petrol	73	08/86-02/92	ENGINE 831 B6.000								
Engine	Information						2.8198PHT	3.8255RS				
All engines	version Marelli									9.6003 C10		4.8398
All engines												
1.6 i.e.	Petrol	80	05/86-12/89	ENGINE 831 B7.000								
Engine	Information						2.8198PHT	3.8257RS	8.4977/1			
All engines	version Marelli											
2.0 i.e. Trazione integrale	Petrol	85	04/86-12/89	ENGINE 831 B4.000								
Engine	Information						2.8198PHT	3.8257RS	8.4977/1			
All engines	version Marelli											
THEMA												
2000 16V	Petrol	112	05/92-07/94	ENGINE 834 F1.000								
Engine	Information									9.6068 C10		4.8700
All engines												
2000 16V Turbo	Petrol	133	12/88-06/90	ENGINE 834 C1.000								
Engine	Information									9.6046 C10		
All engines	Qty: 2											4.8456
All engines												
2000 16V Turbo	Petrol	148	10/92-07/94	ENGINE 834 F2.000								
Engine	Information									9.6068 C10		4.8700
All engines												
2000 i.e	Petrol	86	09/88-05/92	ENGINE 834 B1.000								
Engine	Information						2.8215PHT					
All engines	version Marelli							3.8255RS				
All engines	->eng. 112486, version Marelli							3.8259				
All engines	eng. type 112486 ->, version Marelli									9.6048 C10		4.8398
All engines												
2000 i.e.	Petrol	85	09/87-05/92	ENGINE 834 B.146								
Engine	Information						2.8215PHT					
All engines	version Marelli							3.8255RS				
All engines	->eng. 112486, version Marelli							3.8259				
All engines	eng. type 112486 ->, version Marelli									9.6048 C10		4.8398
All engines												
2000 i.e. 16V	Petrol	104	02/89-05/92	ENGINE 834 B2.246								
Engine	Information									9.6046 C10		
All engines	Qty: 2											4.8456
All engines												
2000 i.e. 16V	Petrol	108	05/88-08/92	ENGINE 834 B2.000								
Engine	Information									9.6046 C10		
All engines	Qty: 2											4.8456
All engines												
2000 i.e. 16V Turbo	Petrol	130	04/89-03/93	ENGINE 834 C1.246								
Engine	Information									9.6046 C10		
All engines	Qty: 2											4.8456
All engines												
2000 i.e. 16V Turbo	Petrol	133	12/88-06/90	ENGINE 834 C1.000								
Engine	Information									9.6046 C10		
All engines	Qty: 2											4.8456
All engines												

A10	CONDENSER	A20	CONTACT SET	A40	DISTRIBUTOR CAP	A50	ROTOR	A70	PICK-UP
C10	COIL	C20	IGNITION MODULE	C30	ELECTRONIC IGNITION KIT	E01	IGNITION CABLE SET		

The present application list is a brief version. For the detailed information about the possibility of installation on a specific vehicle, please refer to our web-catalogue http://catalogo.facet.eu/

Vehicle	alim.	kW	Date	Engine	FUNCTIONS ON THE VEHICLE A10	A20	A40	A50	A70	C10 - C30	C20	E01
2000 i.e.Turbo	Petrol	110	07/86-05/90	**834 C.146**								
Engine	Information						2.8215PHT					
All engines	version Marelli							3.8255RS				
All engines	->eng. 112486, version Marelli							3.8259				
All engines	eng. type 112486 ->, version Marelli									9.6048 C10		4.8398
All engines												
2000 Turbo	Petrol	110	12/88-03/92	**834 C.146**								
Engine	Information						2.8215PHT					
All engines	version Marelli							3.8255RS				
All engines	->eng. 112486, version Marelli							3.8259				
All engines	eng. type 112486 ->, version Marelli									9.6048 C10		4.8398
All engines												
2000 Turbo 16V	Petrol	148	11/92-07/94	**834 F2.000**								
Engine	Information									9.6068 C10		4.8700
All engines												
2850 V6 i.e.	Petrol	108	06/88-05/92	**834 E.146**								
Engine	Information						2.7530/6PHT	3.7573/19RS				
All engines	version Bosch									9.6026 C10		
All engines												
2850 V6 i.e.	Petrol	110	11/84-09/88	**834 E.000**								
Engine	Information							3.7523RS				
All engines	version Bosch											
8.32	Petrol	151	10/87-05/92	**F 105 L.046**								
Engine	Information									9.8003 C30		
All engines	Qty: 2											
8.32	Petrol	158	09/87-05/89	**F 105 L**								
Engine	Information									9.6026 C10		
All engines										9.8003 C30		
All engines	Qty: 2											
THESIS												
3.0 V6	Petrol	158	07/02-07/09	**841 A.000**								
Engine	Information									9.6213 C10		
All engines	x 6, COIL ON PLUG											
3.2 V6	Petrol	169	05/03-07/09	**841 L.000**								
Engine	Information									9.6213 C10		
All engines	x 6, COIL ON PLUG											
Y I												
1.1	Petrol	40	11/95-09/03	**176 B2.000**								
Engine	Information									9.6046 C10		
All engines	x 1, D.I.S., connector type DIN											4.8616
All engines												
1.2	Petrol	44	03/96-09/03	**188 A4.000, 840 A3.000**								
Engine	Information									9.6046 C10		
All engines	x 1, D.I.S., connector type DIN											4.8616
Eng. 840 A3.000												4.9451
Eng. 188 A4.000												
1.2 16V	Petrol	59	10/00-09/03	**188 A5.000**								
Engine	Information									9.6068 C10		
All engines	x 1, D.I.S., connector type, saw teeth											4.9505
All engines												

A10	CONDENSER	**A20**	CONTACT SET	**A40**	DISTRIBUTOR CAP	**A50**	ROTOR	**A70**	PICK-UP
C10	COIL	**C20**	IGNITION MODULE	**C30**	ELECTRONIC IGNITION KIT	**E01**	IGNITION CABLE SET		

The present application list is a brief version. For the detailed information about the possibility of installation on a specific vehicle, please refer to our web-catalogue http://catalogo.facet.eu/

Vehicle	alim.	kW	Date	Engine	FUNCTIONS ON THE VEHICLE A10	A20	A40	A50	A70	C10 - C30	C20	E01
1.2 16V	Petrol	63	04/97-09/03	**176 B9.000**								
All engines	-->year 01/12/99, x 1, D.I.S., connector type DIN									9.6046 C10		
All engines	01/01/00 ->, x 1, D.I.S., connector type, saw teeth									9.6068 C10		
All engines												4.9504
1.4 12V	Petrol	55	03/96-09/03	**840 A4.000**								
All engines	x 1, D.I.S., connector type, saw teeth									9.6068 C10		
All engines												4.9363
1.4 12V	Petrol	59	10/96-09/03	**840 A2.000**								
All engines	x 1, D.I.S., connector type, saw teeth									9.6068 C10		
All engines												4.9363
Y10												
1.0 Fire	Petrol	32	06/85-06/91	**156 A2.100**								
All engines	version Marelli						2.8209PHT	3.8260	8.4980M			
All engines										9.6008 C10	9.4020	4.8347
1.0 Fire Catalyti-c-Conv	Petrol	33	10/87-02/92	**156 A2.246**								
All engines	version Marelli						2.8209PHT	3.8260	8.4980M			
All engines										9.6008 C10	9.4020	4.8347
1.0 Fire Trazione integrale	Petrol	32	12/86-02/89	**156 A2.100**								
All engines	version Ducellier						2.7680PHT	3.7694				
All engines	version Marelli						2.8209PHT	3.8260	8.4980M			
All engines										9.6008 C10	9.4020	4.8347
1.0 Fire Trazione integrale	Petrol	33	12/87-02/92	**156 A2.246**								
All engines	version Ducellier						2.7680PHT	3.7694				
All engines	version Marelli						2.8209PHT	3.8260	8.4980M			
All engines										9.6008 C10	9.4020	
1.0 Fire Trazione integrale	Petrol	37	12/87-02/90	**156 A2.000**								
All engines	version Ducellier						2.7680PHT	3.7694			9.4029	
All engines	version Marelli						2.8209PHT	3.8260	8.4980M		9.4020	
All engines										9.6008 C10		4.8347
1.1 Fire	Petrol	40	01/95-12/95	**176 B2.000**								
All engines										9.6068 C10		4.8694
1.1 Fire Trazione integrale	Petrol	40	01/95-12/95	**176 B2.000**								
All engines										9.6068 C10		4.8694
1.1 i.e Fire	Petrol	42	08/89-06/92	**156 C.000**								
All engines	version Ducellier						2.7680PHT	3.7694			9.4029	
All engines	version Marelli						2.8209PHT	3.8260	8.4980M		9.4020	

A10	CONDENSER	**A20**	CONTACT SET	**A40**	DISTRIBUTOR CAP	**A50**	ROTOR	**A70**	PICK-UP
C10	COIL	**C20**	IGNITION MODULE	**C30**	ELECTRONIC IGNITION KIT	**E01**	IGNITION CABLE SET		

The present application list is a brief version. For the detailed information about the possibility of installation on a specific vehicle, please refer to our web-catalogue http://catalogo.facet.eu/

Vehicle	alim.	kW	Date	Engine	FUNCTIONS ON THE VEHICLE A10	A20	A40	A50	A70	C10 - C30	C20	E01
1.1 i.e Fire	Petrol	42	08/89-06/92	ENGINE 156 C.000								
All engines										9.6008 C10		4.8347
1.1 i.e Fire Trazione integrale	Petrol	42	08/89-06/92	ENGINE 156 C.000								
All engines	version Ducellier						2.7680PHT	3.7694			9.4029	
All engines	version Marelli						2.8209PHT	3.8260	8.4980M		9.4020	
All engines										9.6008 C10		
1.1 i.e. Fire	Petrol	37	07/89-09/95	ENGINE 156 C.046								
All engines	version Marelli						2.8209PHT	3.8260	8.4980M			
All engines										9.6008 C10	9.4020	4.8347
1.1 i.e. Fire Trazione integrale	Petrol	37	09/92-12/95	ENGINE 156 C.046								
All engines										9.6068 C10		4.8694
1.3 i.e.	Petrol	53	02/89-12/95	ENGINE 146 A 5.046, 156 B.000								
All engines	version Marelli						2.8201PHT					
All engines	version Marelli, version Marelli							3.8255RS				
All engines										9.6048 C10		
1.3 i.e.	Petrol	56	11/87-05/93	ENGINE 156 B.000								
All engines	version Marelli						2.8201PHT	3.8255RS				
All engines										9.6048 C10		
YPSILON II												
1.2	Petrol	44	10/03-12/11	ENGINE 188 A4.000								
All engines	euro 4 (D4), x 1, D.I.S., connector type DIN									9.6046 C10		
All engines	euro 5, x 1, D.I.S.									9.6323 C10		
All engines												4.9451
1.2	Petrol	51	08/10-12/11	ENGINE 169 A4.000								
All engines	euro 4 (D4), x 1, D.I.S., connector type DIN									9.6046 C10		
All engines	euro 5, x 1, D.I.S.									9.6323 C10		
All engines												4.9451
1.2	Petrol	59	10/03-12/11	ENGINE 188 A5.000								
All engines	x 4, COIL ON PLUG, incl. spark plug connector									9.6342 C10		
1.4	Petrol	57	02/06-12/11	ENGINE 350 A1.000								
All engines	x 1, D.I.S.									9.6323 C10		
All engines												4.7170
1.4 16V	Petrol	70	10/03-12/11	ENGINE 843 A 1.000								
All engines	x 4, COIL ON PLUG, incl. spark plug connector									9.6342 C10		

A10	CONDENSER	A20	CONTACT SET	A40	DISTRIBUTOR CAP	A50	ROTOR	A70	PICK-UP
C10	COIL	C20	IGNITION MODULE	C30	ELECTRONIC IGNITION KIT	E01	IGNITION CABLE SET		

The present application list is a brief version. For the detailed information about the possibility of installation on a specific vehicle, please refer to our web-catalogue http://catalogo.facet.eu/

Vehicle	alim.	kW	Date	Engine	FUNCTIONS ON THE VEHICLE A10	A20	A40	A50	A70	C10 - C30	C20	E01
1.4 LPG	Petrol/ Liquified Petro-leum Gas (LPG)	57	11/10-12/11	**350 A1.000**								

Engine	Information	A10	A20	A40	A50	A70	C10 - C30		C20	E01
All engines	x 1, D.I.S.						9.6323	C10		
All engines										4.7170

YPSILON III

1.2	Petrol	51	05/11->	**169 A4.000**

Engine	Information	A10	A20	A40	A50	A70	C10 - C30		C20	E01
All engines	x 1, D.I.S.						9.6323	C10		
All engines										4.7170

1.2 Bi-fuel	Petrol/ Liquified Petro-leum Gas (LPG)	49	05/11->	**169 A4.000**

Engine	Information	A10	A20	A40	A50	A70	C10 - C30		C20	E01
All engines	x 1, D.I.S.						9.6323	C10		
All engines										4.7170

1.2 Bi-fuel	Petrol/ Liquified Petro-leum Gas (LPG)	51	05/11->	**169 A4.000**

Engine	Information	A10	A20	A40	A50	A70	C10 - C30		C20	E01
All engines	x 1, D.I.S.						9.6323	C10		
All engines										4.7170

ZETA

2.0 Turbo	Petrol	108	05/95-09/02	**RGX (XU10J2TE)**

Engine	Information	A10	A20	A40	A50	A70	C10 - C30		C20	E01
All engines							9.6088	C10		

A10	CONDENSER	**A20**	CONTACT SET	**A40**	DISTRIBUTOR CAP	**A50**	ROTOR	**A70**	PICK-UP
C10	COIL	**C20**	IGNITION MODULE	**C30**	ELECTRONIC IGNITION KIT	**E01**	IGNITION CABLE SET		

The present application list is a brief version. For the detailed information about the possibility of installation on a specific vehicle, please refer to our web-catalogue http://catalogo.facet.eu/

Vehicle	alim.	kW	Date	Engine	FUNCTIONS ON THE VEHICLE A10	A20	A40	A50	A70	C10 - C30	C20	E01
110/127												
2.5 4x4	Petrol	61	10/85-07/90	17 H								
All engines	version Ducellier				0.0334		2.7654PHT	3.7691				
All engines	version Lucas					1.4689	2.8078	3.8112				
All engines										9.6001D C10		
88/109												
2.3 4x4	Petrol	51	09/61-12/86	10 H, 11H								
All engines						1.4683MHDV	2.8070, 2.8075	3.8106				
90												
2.5 4x4	Petrol	62	09/85-08/90	17 H								
All engines	version Ducellier				0.0334		2.7654PHT	3.7691				
All engines	version Lucas					1.4689	2.8078	3.8112				
All engines										9.6001D C10		
DEFENDER												
3.5 4x4	Petrol	100	09/90-12/98	15G, 21 G, 22 D								
All engines	version Lucas						2.8091PHT	3.8121, 3.8122				
DISCOVERY I												
3.5 4x4	Petrol	113	06/89-06/94	22 D								
All engines	version Lucas						2.8091PHT	3.8122				
4.0 4x4	Petrol	134	09/93-10/98	35 D, 36 D								
All engines	->ch. SA163099, SA501919, version Lucas						2.8091PHT	3.8122				
DISCOVERY II												
4.0 V8 4x4	Petrol	136	11/98-06/04	35 D, 56 D, 94 D								
Eng. 35 D, 94 D	Qty: 2									9.6068 C10		
Eng. 56 D	x 1, D.I.S.									9.6068 C10		
All engines												4.7107
4.6 V8 [USA]	Petrol	162	01/03-06/04	--								
All engines	Qty: 2									9.6068 C10		
All engines												4.7107
FREELANDER												
1.8 16V 4x4	Petrol	86	04/98-10/06	18 K4F								
All engines	->ch. YA999999, version Lucas						2.8093PHT	3.8129RS				
All engines	ch. 1A000001 ->, x 1, DISTRIBUTOR									9.6274 C10		
All engines	ch. 1A000001 ->											4.9889
All engines	->ch. YA999999											4.9900
1.8 4x4	Petrol	86	10/00-10/06	18 K4F								
All engines	ch. 1A000001 ->, x 1, DISTRIBUTOR									9.6274 C10		
1.8 i 16V 4x4	Petrol	88	02/98-10/06	18 K4F								
All engines	->ch. YA999999, version Lucas						2.8093PHT	3.8129RS				

A10	CONDENSER	**A20**	CONTACT SET	**A40**	DISTRIBUTOR CAP	**A50**	ROTOR	**A70**	PICK-UP
C10	COIL	**C20**	IGNITION MODULE	**C30**	ELECTRONIC IGNITION KIT	**E01**	IGNITION CABLE SET		

The present application list is a brief version. For the detailed information about the possibility of installation on a specific vehicle, please refer to our web-catalogue http://catalogo.facet.eu/

Vehicle	alim.	kW	Date	Engine	FUNCTIONS ON THE VEHICLE A10	A20	A40	A50	A70	C10 - C30	C20	E01
1.8 i 16V 4x4	Petrol	88	02/98-10/06	ENGINE 18 K4F								
Engine	Information											
All engines	ch. 1A000001 ->, x 1, DISTRIBUTOR									9.6274 C10		
All engines	ch. 1A000001 ->											4.9889
All engines	->ch. YA999999											4.9900
2.5 V6 4x4	Petrol	130	11/00-10/06	ENGINE 25KV6								
Engine	Information											
All engines	->ch. 3A224999, x 1, D.I.S.									9.6252 C10		
All engines	->ch. 3A224999, x 6, COIL ON PLUG									9.6313 C10		
RANGE ROVER I												
3.5 4x4	Petrol	107	01/87-09/90	ENGINE 31 D								
Engine	Information											
All engines	version Lucas						2.8091PHT	3.8122				
3.5 Vogue 4x4	Petrol	120	10/85-09/90	ENGINE 24 D, 25 D								
Engine	Information											
All engines	version Lucas						2.8091PHT	3.8122				
3.5 Vogue 4x4	Petrol	93	08/81-09/90	ENGINE 11 D								
Engine	Information											
All engines	version Lucas						2.8091PHT					
3.9 4x4	Petrol	134	11/88-12/92	ENGINE 35 D								
Engine	Information											
All engines	version Lucas						2.8091PHT	3.8122				
3.9 Cat 4x4	Petrol	127	11/88-07/94	ENGINE 37 D, 38 D								
Engine	Information											
All engines	version Lucas						2.8091PHT	3.8122				
3.9 Vogue SEI 4x4	Petrol	134	11/88-07/94	ENGINE 35 D, 36 D								
Engine	Information											
All engines	version Lucas						2.8091PHT	3.8122				
4.3 Vogue LSE 4x4	Petrol	149	09/92-07/94	ENGINE 40 D								
Engine	Information											
All engines	version Lucas						2.8091PHT	3.8122				
RANGE ROVER II												
3.9 4x4	Petrol	140	07/94-03/02	ENGINE 42 D								
Engine	Information											
All engines	ch. XA410482 ->, x 1, D.I.S.									9.6068 C10		
All engines	ch. XA410482 ->											4.7107
4.0 4x4	Petrol	136	01/95-03/02	ENGINE 42 D, 46698710								
Engine	Information											
Eng. 42 D	ch. XA410482 ->, Qty: 2									9.6068 C10		
Eng. 46698710	ch. XA410482 ->, x 1, D.I.S.									9.6068 C10		
Eng. 42 D	ch. XA410482 ->											4.7107
4.6 4x4	Petrol	160	06/98-03/02	ENGINE 60 D								
Engine	Information											
All engines	ch. XA410482 ->, x 1, D.I.S.									9.6068 C10		
4.6 4x4	Petrol	165	07/94-03/02	ENGINE 46 D, 48 D, 60 D								
Engine	Information											
Eng. 46 D	ch. XA410482 ->, Qty: 2									9.6068 C10		
Eng. 48 D, 60 D	ch. XA410482 ->, x 1, D.I.S.									9.6068 C10		

A10	CONDENSER	A20	CONTACT SET	A40	DISTRIBUTOR CAP	A50	ROTOR	A70	PICK-UP
C10	COIL	C20	IGNITION MODULE	C30	ELECTRONIC IGNITION KIT	E01	IGNITION CABLE SET		

The present application list is a brief version. For the detailed information about the possibility of installation on a specific vehicle, please refer to our web-catalogue http://catalogo.facet.eu/

Vehicle	alim.	kW	Date	Engine	FUNCTIONS ON THE VEHICLE							
					A10	A20	A40	A50	A70	C10 - C30	C20	E01
4.6 4x4	Petrol	165	07/94-03/02	ENGINE 46 D, 48 D, 60 D								
Engine: Eng. 46 D	Information: ch. XA410482 ->											4.7107
4.6 4x4	Petrol	168	09/95-03/02	ENGINE 46 D								
Engine: All engines	Information: ch. XA410482 ->, Qty: 2									9.6068 C10		
Engine: All engines	Information: ch. XA410482 ->											4.7107
RANGE ROVER III												
4.4 4x4	Petrol	210	03/02-08/05	ENGINE 44SDEX, M62 B44								
Engine: Eng. 44SDEX	Information: x 8, COIL ON PLUG									9.6252 C10		
Engine: Eng. M62 B44	Information: Qty: 8									9.6252 C10		
4.4 4x4	Petrol	220	08/04-08/12	ENGINE 448PN								
Engine: All engines	Information: x 8, COIL ON PLUG									9.6252 C10		

A10	CONDENSER	A20	CONTACT SET	A40	DISTRIBUTOR CAP	A50	ROTOR	A70	PICK-UP
C10	COIL	C20	IGNITION MODULE	C30	ELECTRONIC IGNITION KIT	E01	IGNITION CABLE SET		

Vehicle	alim.	kW	Date	Engine	FUNCTIONS ON THE VEHICLE							
					A10	A20	A40	A50	A70	C10 - C30	C20	E01
CT												
200h	Petrol/ Electric	100	09/11->	ENGINE 2ZR-FXE						9.6436 C10		
Engine: All engines — Information: CT 200h, x 4, COIL ON PLUG												
200h	Petrol/ Electric	73	12/10->	ENGINE 2ZR-FXE						9.6436 C10		
Engine: All engines — Information: CT 200h, x 4, COIL ON PLUG												
ES												
200	Petrol	110	08/15->	ENGINE 6AR-FSE						9.6437 C10		
Engine: All engines — Information: ES 200, x 4, COIL ON PLUG, FOR: (J)												
250	Petrol	118	12/89-12/91	ENGINE 2VZ-FE						9.6102 C10		
Engine: All engines — Information:												
250	Petrol	135	06/12-06/18	ENGINE 2AR-FE						9.6437 C10		
Engine: All engines — Information: ES 250, x 4, COIL ON PLUG, FOR: (J)												
3.5	Petrol	204	05/06-06/12	ENGINE 2GR-FE						9.6438 C10		
Engine: All engines — Information: ES 350, x 6, COIL ON PLUG												
300h	Petrol/ Electric	118	06/12-06/18	ENGINE 2AR-FXE						9.6437 C10		
Engine: All engines — Information: ES 300h, x 4, COIL ON PLUG, FOR: (J)												
350	Petrol	183	06/12-06/18	ENGINE 2GR-FE						9.6438 C10		
Engine: All engines — Information: ES 350, x 6, COIL ON PLUG												
350	Petrol	204	06/12-06/18	ENGINE 2GR-FE						9.6438 C10		
Engine: All engines — Information: ES 350, x 6, COIL ON PLUG												
GS												
250	Petrol	154	01/12->	ENGINE 4GR-FSE						9.6437 C10		
Engine: All engines — Information: GS 250, x 6, COIL ON PLUG, FOR: (J)												
3.5 450h	Petrol/ Electric	213	03/12-09/18	ENGINE 2GR-FXE						9.6437 C10		
Engine: All engines — Information: GS 450h, x 6, COIL ON PLUG, FOR: (J)												
3.5 VVTi	Petrol	223	04/05-12/12	ENGINE 2GR-FSE						9.6437 C10		
Engine: All engines — Information: GS 350, x 6, COIL ON PLUG, FOR: (J)												
300	Petrol	156	01/93-08/97	ENGINE 2JZ-GE						9.6103 C10		
Engine: All engines — Information:												
300	Petrol	170	04/05-11/11	ENGINE 3GR-FE						9.6437 C10		
Engine: All engines — Information: GS 300, x 6, COIL ON PLUG, FOR: (J)												

A10	CONDENSER	**A20**	CONTACT SET	**A40**	DISTRIBUTOR CAP	**A50**	ROTOR	**A70**	PICK-UP
C10	COIL	**C20**	IGNITION MODULE	**C30**	ELECTRONIC IGNITION KIT	**E01**	IGNITION CABLE SET		

The present application list is a brief version. For the detailed information about the possibility of installation on a specific vehicle, please refer to our web-catalogue http://catalogo.facet.eu/

Vehicle	alim.	kW	Date	Engine	FUNCTIONS ON THE VEHICLE							
					A10	A20	A40	A50	A70	C10 - C30	C20	E01
300	Petrol	183	04/05-11/11	**3GR-FSE**								
All engines	GS 300, x 6, COIL ON PLUG, FOR: (J)									9.6437 C10		
300h	Petrol/ Electric	133	10/13->	**2AR-FSE**								
All engines	GS 300h, x 4, COIL ON PLUG, FOR: (J)									9.6437 C10		
350	Petrol	226	09/06-11/11	**2GR-FSE**								
All engines	GS 350, x 6, COIL ON PLUG, FOR: (J)									9.6437 C10		
350	Petrol	233	03/12->	**2GR-FSE**								
All engines	GS 350, x 6, COIL ON PLUG, FOR: (J)									9.6437 C10		
350	Petrol	234	01/12->	**2GR-FSE**								
All engines	GS 350, x 6, COIL ON PLUG, FOR: (J)									9.6437 C10		
350 AWD	Petrol	226	09/06-11/11	**2GR-FSE**								
All engines	GS 350, x 6, COIL ON PLUG, FOR: (J)									9.6437 C10		
350 AWD	Petrol	232	05/08-11/11	**2GR-FSE**								
All engines	GS 350, x 6, COIL ON PLUG, FOR: (J)									9.6437 C10		
350 AWD	Petrol	233	03/12->	**2GR-FSE**								
All engines	GS 350, ->year 01/09/15, x 6, COIL ON PLUG, FOR: (J)									9.6437 C10		
350 AWD	Petrol	234	12/11->	**2GR-FKS, 2GR-FSE**								
All engines	GS 350, ->year 01/09/15, x 6, COIL ON PLUG, FOR: (J)									9.6437 C10		
450h	Petrol/ Electric	215	01/12->	**2GR-FXE**								
All engines	GS 450h, x 6, COIL ON PLUG, FOR: (J)									9.6437 C10		
450h	Petrol/ Electric	218	02/06-11/11	**2GR-FSE**								
All engines	GS 450h, x 6, COIL ON PLUG, FOR: (J)									9.6437 C10		
450h	Petrol/ Electric	254	02/06-09/18	**2GR-FSE, 2GR-FXE**								
All engines	GS 450h, x 6, COIL ON PLUG, FOR: (J)									9.6437 C10		
F	Petrol	351	09/15->	**2UR-GSE**								
All engines	GS F, x 8, COIL ON PLUG, FOR: (J)									9.6358 C10		
GX												
460 4WD	Petrol	218	01/10->	**1UR-FE**								
All engines	GX 460, x 8, COIL ON PLUG, FOR: (J)									9.6437 C10		

A10	CONDENSER	**A20**	CONTACT SET	**A40**	DISTRIBUTOR CAP	**A50**	ROTOR	**A70**	PICK-UP
C10	COIL	**C20**	IGNITION MODULE	**C30**	ELECTRONIC IGNITION KIT	**E01**	IGNITION CABLE SET		

The present application list is a brief version. For the detailed information about the possibility of installation on a specific vehicle, please refer to our web-catalogue http://catalogo.facet.eu/

Vehicle	alim.	kW	Date	Engine	FUNCTIONS ON THE VEHICLE							
					A10	A20	A40	A50	A70	C10 - C30	C20	E01
460 4WD	Petrol	225	01/10->	ENGINE 1UR-FE								
Engine: All engines	Information: GX 460, x 8, COIL ON PLUG, FOR: (J)									9.6437 C10		
HS												
250h	Petrol/ Electric	110	07/09-01/18	ENGINE 2AZ-FXE								
Engine: All engines	Information: HS 250h, x 4, COIL ON PLUG, FOR: (J)									9.6366 C10		
IS II												
250	Petrol	153	08/05-06/15	ENGINE 4GR-FSE								
Engine: All engines	Information: IS 250, IS 250 C, x 6, COIL ON PLUG, FOR: (J)									9.6437 C10		
250	Petrol	157	08/10->	ENGINE 4GR-FSE								
Engine: All engines	Information: Qty: 6									9.6437 C10		
250	Petrol	158	11/10-03/13	ENGINE 4GR-FSE								
Engine: All engines	Information: Qty: 6									9.6437 C10		
250 AWD	Petrol	153	10/05-03/13	ENGINE 4GR-FSE								
Engine: All engines	Information: IS 250, x 6, COIL ON PLUG, FOR: (J)									9.6437 C10		
250 AWD	Petrol	158	11/10-03/13	ENGINE 4GR-FSE								
Engine: All engines	Information: Qty: 6									9.6437 C10		
350	Petrol	228	04/09->	ENGINE 2GR-FSE								
Engine: All engines	Information: Qty: 6									9.6437 C10		
350	Petrol	234	01/08->	ENGINE 2GR-FSE								
Engine: All engines	Information: Qty: 6									9.6437 C10		
IS III												
250	Petrol	153	04/13->	ENGINE 4GR-FSE								
Engine: All engines	Information: IS 250, x 6, COIL ON PLUG, FOR: (J)									9.6437 C10		
300h	Petrol/ Electric	131	04/13->	ENGINE 2AR-FSE								
Engine: All engines	Information: IS 300h, x 4, COIL ON PLUG, FOR: (J)									9.6437 C10		
300h	Petrol/ Electric	133	04/13->	ENGINE 2AR-FSE								
Engine: All engines	Information: IS 300h, x 4, COIL ON PLUG, FOR: (J)									9.6437 C10		
LC												
500	Petrol	341	11/18->	ENGINE 2UR-GSE								
Engine: All engines	Information: LC 500, x 8, COIL ON PLUG, FOR: (J)									9.6358 C10		

A10	CONDENSER	**A20**	CONTACT SET	**A40**	DISTRIBUTOR CAP	**A50**	ROTOR	**A70**	PICK-UP
C10	COIL	**C20**	IGNITION MODULE	**C30**	ELECTRONIC IGNITION KIT	**E01**	IGNITION CABLE SET		

The present application list is a brief version. For the detailed information about the possibility of installation on a specific vehicle, please refer to our web-catalogue http://catalogo.facet.eu/

Vehicle	alim.	kW	Date	Engine	FUNCTIONS ON THE VEHICLE A10	A20	A40	A50	A70	C10 - C30	C20	E01
500	Petrol	351	11/16->	2UR-GSE								
LS I												
400	Petrol	180	12/89-12/95	1UZ-FE								
LS II												
400	Petrol	194	12/94-08/97	1UZ-FE								
LS IV												
460	Petrol	255	08/06->	1UR-FE								
460	Petrol	280	04/06->	1UR-FE - E4, 1UR-FE - E5, 1UR-FSE, 1UR-FSE - E4, 1UR-FSE - E5								
460	Petrol	285	09/12->	1UR-FSE								
460 4WD	Petrol	280	08/06->	1UR-FSE								
460 AWD	Petrol	270	12/08->	1UR-FE - E4, 1UR-FSE								
460 AWD	Petrol	272	09/12->	1UR-FSE								
460 AWD	Petrol	283	10/09->	1UR-FSE								
600h AWD	Petrol/ Electric	272	07/12-07/17	2UR-FSE								
600h AWD	Petrol/ Electric	290	04/07->	2UR-FSE, 2URFSE - E4, 2UR-FSE - E5								

Engine	Information	A10	A20	A40	A50	A70	C10 - C30	C20	E01
All engines	LC 500, x 8, COIL ON PLUG, FOR: (J)						9.6358 C10		
All engines	Qty: 2						9.6103 C10		
All engines	LS 400, x 1, DISTRIBUTOR						9.6103 C10		
All engines	LS 460, x 8, COIL ON PLUG, FOR: (J)						9.6437 C10		
Eng. 1UR-FE - E4, 1UR-FE - E5, 1UR-FSE - E4, 1UR-FSE - E5	Qty: 6						9.6437 C10		
Eng. 1UR-FSE	LS 460, x 8, COIL ON PLUG, FOR: (J)						9.6437 C10		
All engines	LS 460, x 8, COIL ON PLUG, FOR: (J)						9.6437 C10		
All engines	LS 460, x 8, COIL ON PLUG, FOR: (J)						9.6437 C10		
Eng. 1UR-FE - E4	Qty: 8						9.6437 C10		
Eng. 1UR-FSE	LS 460, x 8, COIL ON PLUG, FOR: (J)						9.6437 C10		
All engines	LS 460, x 8, COIL ON PLUG, FOR: (J)						9.6437 C10		
All engines	LS 460, x 8, COIL ON PLUG, FOR: (J)						9.6437 C10		
All engines	LS 600h, x 8, COIL ON PLUG, FOR: (J)						9.6437 C10		
Eng. 2UR-FSE	LS 600h, x 8, COIL ON PLUG, FOR: (J)						9.6437 C10		
Eng. 2URFSE - E4, 2UR-FSE - E5	Qty: 6						9.6437 C10		

A10	CONDENSER	A20	CONTACT SET	A40	DISTRIBUTOR CAP	A50	ROTOR	A70	PICK-UP
C10	COIL	C20	IGNITION MODULE	C30	ELECTRONIC IGNITION KIT	E01	IGNITION CABLE SET		

The present application list is a brief version. For the detailed information about the possibility of installation on a specific vehicle, please refer to our web-catalogue http://catalogo.facet.eu/

Vehicle	alim.	kW	Date	Engine	FUNCTIONS ON THE VEHICLE							
					A10	A20	A40	A50	A70	C10 - C30	C20	E01
600h AWD	Petrol/ Electric	327	09/07->	2UR-FSE								
All engines	LS 600h, x 8, COIL ON PLUG, FOR: (J)									9.6437 C10		
LX												
570	Petrol	270	11/07->	3UR-FE								
All engines	LX 570, x 8, COIL ON PLUG, FOR: (J)									9.6437 C10		
570	Petrol	282	11/07->	3UR-FE								
All engines	LX 570, x 8, COIL ON PLUG, FOR: (J)									9.6437 C10		
570	Petrol	285	08/07->	3UR-FE								
All engines	LX 570, x 8, COIL ON PLUG, FOR: (J)									9.6437 C10		
NX												
200	Petrol	110	11/14->	3ZR-FAE								
All engines	NX 200, x 4, COIL ON PLUG									9.6436 C10		
200 AWD	Petrol	110	11/14->	3ZR-FAE								
All engines	NX 200, x 4, COIL ON PLUG									9.6436 C10		
300h	Petrol/ Electric	114	07/14->	2AR-FXE								
All engines	NX 300h, x 4, COIL ON PLUG, FOR: (J)									9.6437 C10		
300h	Petrol/ Electric	145	11/14->	2AR-FXE								
All engines	NX 300h, x 4, COIL ON PLUG, FOR: (J)									9.6437 C10		
300h AWD	Petrol/ Electric	114	07/14->	2AR-FXE								
All engines	NX 300h, x 4, COIL ON PLUG, FOR: (J)									9.6437 C10		
300h AWD	Petrol/ Electric	145	07/14->	2AR-FXE								
All engines	NX 300h, x 4, COIL ON PLUG, FOR: (J)									9.6437 C10		
300h AWD	Petrol/ Electric	147	11/18->	2AR-FXE								
All engines	NX 300h, x 4, COIL ON PLUG, FOR: (J)									9.6437 C10		
RC												
300h	Petrol/ Electric	133	09/14->	2AR-FSE								
All engines	RC 300h, x 4, COIL ON PLUG, FOR: (J)									9.6437 C10		
350	Petrol	234	08/14->	2GR-FSE								
All engines	RC 350, x 6, COIL ON PLUG, FOR: (J)									9.6437 C10		

A10	CONDENSER	A20	CONTACT SET	A40	DISTRIBUTOR CAP	A50	ROTOR	A70	PICK-UP
C10	COIL	C20	IGNITION MODULE	C30	ELECTRONIC IGNITION KIT	E01	IGNITION CABLE SET		

The present application list is a brief version. For the detailed information about the possibility of installation on a specific vehicle, please refer to our web-catalogue http://catalogo.facet.eu/

Vehicle	alim.	kW	Date	Engine	FUNCTIONS ON THE VEHICLE A10	A20	A40	A50	A70	C10 - C30	C20	E01
F	Petrol	330	08/14->	2UR-GSE								
All engines	RCF, x 8, COIL ON PLUG, FOR: (J)									9.6358 C10		
F	Petrol	341	03/18->	2UR-GSE								
All engines	RCF, x 8, COIL ON PLUG, FOR: (J)									9.6358 C10		
F	Petrol	344	08/14->	2UR-GSE								
All engines	RCF, x 8, COIL ON PLUG, FOR: (J)									9.6358 C10		
F	Petrol	351	08/14->	2UR-GSE								
All engines	RCF, x 8, COIL ON PLUG, FOR: (J)									9.6358 C10		
RX II												
350	Petrol	203	01/06-12/08	2GR-FE								
All engines	RX 350, x 6, COIL ON PLUG									9.6438 C10		
350 AWD	Petrol	203	02/06-12/08	2GR-FE, 2GRFE(276)								
Eng. 2GR-FE	RX 350, x 6, COIL ON PLUG									9.6438 C10		
Eng. 2GRFE(276)	->year 01/12/08, 01/01/06 ->									9.6438 C10		
RX III												
270	Petrol	138	12/08-10/15	1AR-FE								
All engines	RX 270, x 4, COIL ON PLUG, FOR: (J)									9.6437 C10		
350	Petrol	202	01/09-09/15	2GR-FE								
All engines	RX 350, FOR: (J), FOR: (USA), FOR: (CDN), x 6, COIL ON PLUG, x 6, COIL ON PLUG									9.6438 C10		
350 AWD	Petrol	204	12/08-08/15	2GR-FE								
All engines	RX 350, FOR: (J), FOR: (USA), FOR: (CDN), x 6, COIL ON PLUG, x 6, COIL ON PLUG									9.6438 C10		
350 AWD	Petrol	206	03/09-02/12	2GR-FE								
All engines	Qty: 6									9.6438 C10		
450h	Petrol/ Electric	183	12/08-10/15	2GR-FXE								
All engines	RX 450h, x 6, COIL ON PLUG									9.6438 C10		
450h	Petrol/ Electric	220	12/08-10/15	2GR-FXE								
All engines	Qty: 6									9.6438 C10		
450h AWD	Petrol/ Electric	183	12/08-10/15	2GR-FXE, 2GRFXE(299H) - E4								
Eng. 2GRFXE(299H) - E4	Qty: 6									9.6437 C10		
Eng. 2GR-FXE	RX 450h, x 6, COIL ON PLUG									9.6438 C10		

A10	CONDENSER	**A20**	CONTACT SET	**A40**	DISTRIBUTOR CAP	**A50**	ROTOR	**A70**	PICK-UP
C10	COIL	**C20**	IGNITION MODULE	**C30**	ELECTRONIC IGNITION KIT	**E01**	IGNITION CABLE SET		

The present application list is a brief version. For the detailed information about the possibility of installation on a specific vehicle, please refer to our web-catalogue http://catalogo.facet.eu/

Vehicle	alim.	kW	Date	Engine	FUNCTIONS ON THE VEHICLE							
					A10	A20	A40	A50	A70	C10 - C30	C20	E01
				ENGINE								
450h AWD	Petrol/ Electric	**220**	12/08-10/15	**2GR-FXE**								

Engine	Information	A10	A20	A40	A50	A70	C10 - C30		C20	E01
All engines	Qty: 6						9.6437	C10		

SC_400

				ENGINE
4.0i	Petrol	**0**	01/91->	**1UZFE**

Engine	Information	A10	A20	A40	A50	A70	C10 - C30		C20	E01
All engines	Qty: 2						9.6103	C10		

A10	CONDENSER	**A20**	CONTACT SET	**A40**	DISTRIBUTOR CAP	**A50**	ROTOR	**A70**	PICK-UP
C10	COIL	**C20**	IGNITION MODULE	**C30**	ELECTRONIC IGNITION KIT	**E01**	IGNITION CABLE SET		

The present application list is a brief version. For the detailed information about the possibility of installation on a specific vehicle, please refer to our web-catalogue http://catalogo.facet.eu/

Vehicle	alim.	kW	Date	Engine	FUNCTIONS ON THE VEHICLE							
					A10	A20	A40	A50	A70	C10 - C30	C20	E01

ECLAT

				ENGINE
2.0	Petrol	119	10/75-05/80	907

Engine	Information	A10	A20	A40	A50	A70	C10 - C30	C20	E01
All engines				2.8075					

ELITE

				ENGINE
2.0	Petrol	119	05/74-05/80	907

Engine	Information	A10	A20	A40	A50	A70	C10 - C30	C20	E01
All engines				2.8075					

ESPRIT

				ENGINE
2.0	Petrol	119	10/75-05/80	907

Engine	Information	A10	A20	A40	A50	A70	C10 - C30	C20	E01
All engines				2.8075					

A10	CONDENSER	A20	CONTACT SET	A40	DISTRIBUTOR CAP	A50	ROTOR	A70	PICK-UP
C10	COIL	C20	IGNITION MODULE	C30	ELECTRONIC IGNITION KIT	E01	IGNITION CABLE SET		

The present application list is a brief version. For the detailed information about the possibility of installation on a specific vehicle, please refer to our web-catalogue http://catalogo.facet.eu/

Vehicle	alim.	kW	Date	Engine	FUNCTIONS ON THE VEHICLE							
					A10	A20	A40	A50	A70	C10 - C30	C20	E01

E2000

				ENGINE
E2000		170	05/00->	E 2866 DF 01

Engine	Information	A10	A20	A40	A50	A70	C10 - C30		C20	E01
All engines	->year 200209			2.7481PHT						

F2000

				ENGINE
F2000		170	09/96->	E 2866 DF 01

Engine	Information	A10	A20	A40	A50	A70	C10 - C30		C20	E01
All engines	->year 200112, ->year 200208			2.7481PHT						

LION´S CITY

				ENGINE
LION´S CITY		184	06/96->	D 0826 LUH

Engine	Information	A10	A20	A40	A50	A70	C10 - C30		C20	E01
All engines	200903 ->						9.6317	C10		

				ENGINE
LION´S CITY		228	05/07->	E 2876 LUH 02

Engine	Information	A10	A20	A40	A50	A70	C10 - C30		C20	E01
All engines							9.6317	C10		

				ENGINE
LION´S CITY		235	10/09->	E 2876 LUH 03

Engine	Information	A10	A20	A40	A50	A70	C10 - C30		C20	E01
All engines							9.6317	C10		

NG

				ENGINE
NG		170	01/95-07/99	E 2866 DUH 01

Engine	Information	A10	A20	A40	A50	A70	C10 - C30		C20	E01
All engines				2.7481PHT, 2.7530/28PHT			9.6317	C10		

				ENGINE
NG		228	05/07-12/14	E 2876 LUH 02

Engine	Information	A10	A20	A40	A50	A70	C10 - C30		C20	E01
All engines							9.6317	C10		

NL

				ENGINE
NL		170	05/93-06/00	E 2866 DUH 01, E 2866 DUH 02

Engine	Information	A10	A20	A40	A50	A70	C10 - C30		C20	E01
All engines	199404 ->			2.7481PHT, 2.7530/28PHT			9.6317	C10		

				ENGINE
NL		180	05/07-12/14	E 2866 DUH 03

Engine	Information	A10	A20	A40	A50	A70	C10 - C30		C20	E01
All engines							9.6317	C10		

				ENGINE
NL		228	04/99-12/14	E 2866 LUH 02, E 2876 LUH 02

Engine	Information	A10	A20	A40	A50	A70	C10 - C30		C20	E01
All engines							9.6317	C10		

A10	CONDENSER	A20	CONTACT SET	A40	DISTRIBUTOR CAP	A50	ROTOR	A70	PICK-UP
C10	COIL	C20	IGNITION MODULE	C30	ELECTRONIC IGNITION KIT	E01	IGNITION CABLE SET		

The present application list is a brief version. For the detailed information about the possibility of installation on a specific vehicle, please refer to our web-catalogue http://catalogo.facet.eu/

Vehicle	alim.	kW	Date	Engine	FUNCTIONS ON THE VEHICLE							
					A10	A20	A40	A50	A70	C10 - C30	C20	E01
800												
				ENGINE								
0.8	Petrol	**26**	01/91-12/06	**F8B**								

Engine	Information	A10	A20	A40	A50	A70	C10 - C30	C20	E01
All engines	version Denso		1.3511HDV	2.7607	3.7630				

A10	CONDENSER	**A20**	CONTACT SET	**A40**	DISTRIBUTOR CAP	**A50**	ROTOR	**A70**	PICK-UP
C10	COIL	**C20**	IGNITION MODULE	**C30**	ELECTRONIC IGNITION KIT	**E01**	IGNITION CABLE SET		

The present application list is a brief version. For the detailed information about the possibility of installation on a specific vehicle, please refer to our web-catalogue http://catalogo.facet.eu/

Vehicle	alim.	kW	Date	Engine	FUNCTIONS ON THE VEHICLE							
					A10	A20	A40	A50	A70	C10 - C30	C20	E01

BITURBO

				ENGINE
i	Petrol	136	07/85-04/87	AM 452

Engine	Information	A10	A20	A40	A50	A70	C10 - C30	C20	E01
All engines	version Marelli				3.8254RS				

A10	CONDENSER	**A20**	CONTACT SET	**A40**	DISTRIBUTOR CAP	**A50**	ROTOR	**A70**	PICK-UP
C10	COIL	**C20**	IGNITION MODULE	**C30**	ELECTRONIC IGNITION KIT	**E01**	IGNITION CABLE SET		

The present application list is a brief version. For the detailed information about the possibility of installation on a specific vehicle, please refer to our web-catalogue http://catalogo.facet.eu/

Vehicle	alim.	kW	Date	Engine	FUNCTIONS ON THE VEHICLE							
					A10	A20	A40	A50	A70	C10 - C30	C20	E01

121

				ENGINE
1.3	Petrol	37	07/96-10/02	1E03

Engine	Information	A10	A20	A40	A50	A70	C10 - C30	C20	E01
All engines	x 1, DENSO, x 1, D.I.S., x 1, D.I.S.						9.6432 C10		

				ENGINE
1.3	Petrol	44	01/96-05/97	1E04

Engine	Information	A10	A20	A40	A50	A70	C10 - C30	C20	E01
All engines	x 1, D.I.S., DENSO, D.I.S.						9.6432 C10		

121 I

				ENGINE
1.1	Petrol	42	10/87-10/90	B1, B116

Engine	Information	A10	A20	A40	A50	A70	C10 - C30	C20	E01
Eng. B116	for manuf. exhaust norm US-83, version Mitsubishi			2.8322/22					
Eng. B116	super unlead (95), version Mitsubshi			2.8322/31					
All engines	version Mitsubishi			2.8322/32					
Eng. B116	super unlead (95), version Mitsubishi				3.8331/19				
All engines	for manuf. exhaust norm US-83, version Mitsubishi				3.8331/8				
Eng. B116	super unlead (95)							9.4073	

				ENGINE
1.3	Petrol	40	04/89-10/90	B3

Engine	Information	A10	A20	A40	A50	A70	C10 - C30	C20	E01
All engines	version Mitsubishi			2.8322/22					
All engines	version Mitsubshi			2.8322/31					
All engines	version Mitsubishi, no specific info conc. application available				3.8331/19, 3.8331/8				
All engines								9.4073	

				ENGINE
1.3	Petrol	44	10/87-06/91	B3

Engine	Information	A10	A20	A40	A50	A70	C10 - C30	C20	E01
All engines	FOR: (S), FOR: (CH), version Mitsubishi			2.8322/22					
All engines	FOR: (EU), NOT FOR: (S), NOT FOR: (CH), version Mitsubishi			2.8322/32					
All engines	version Mitsubishi, no specific info conc. application available				3.8331/19, 3.8331/8				

121 II

				ENGINE
1.1	Petrol	40	11/90-10/93	B1

Engine	Information	A10	A20	A40	A50	A70	C10 - C30	C20	E01
All engines	version Mitsubishi			2.8322/31	3.8331/19				
All engines								9.4073	

				ENGINE
1.3 16V	Petrol	39	11/90-03/96	B3 (16V)

Engine	Information	A10	A20	A40	A50	A70	C10 - C30	C20	E01
All engines	version Hitachi			2.7988	3.7994				

				ENGINE
1.3 i 16V	Petrol	53	11/90-03/96	B3 (16V)

Engine	Information	A10	A20	A40	A50	A70	C10 - C30	C20	E01
All engines	version Hitachi			2.7988	3.7994				

121 III

				ENGINE
1.25	Petrol	55	03/96-04/03	1E05, DHF, DHG

Engine	Information	A10	A20	A40	A50	A70	C10 - C30	C20	E01
Eng. 1E05	->year 01/05/98, 01/06/98 ->, ->year 01/11/00, x 1, D.I.S., x 1, D.I.S.						9.6199 C10		
Eng. DHF, DHG							9.6199, 9.6212 C10		
Eng. 1E05	01/12/00 ->, x 1, D.I.S.						9.6432 C10		

				ENGINE
1.3	Petrol	37	03/96-04/03	1E03, JJK, JJM

Engine	Information	A10	A20	A40	A50	A70	C10 - C30	C20	E01
Eng. 1E03	x 1, DENSO, x 1, D.I.S., x 1, D.I.S.						9.6432 C10		
Eng. JJK, JJM							9.6432 C10		

A10	CONDENSER	A20	CONTACT SET	A40	DISTRIBUTOR CAP	A50	ROTOR	A70	PICK-UP
C10	COIL	C20	IGNITION MODULE	C30	ELECTRONIC IGNITION KIT	E01	IGNITION CABLE SET		

The present application list is a brief version. For the detailed information about the possibility of installation on a specific vehicle, please refer to our web-catalogue http://catalogo.facet.eu/

Vehicle	alim.	kW	Date	Engine	FUNCTIONS ON THE VEHICLE: A10	A20	A40	A50	A70	C10 - C30	C20	E01
1.3	Petrol	44	03/96-04/03	ENGINE: 1E04, 1E09, J4R, J4T								
Eng. 1E04, 1E09	x 1, DENSO, x 1, D.I.S., x 1, D.I.S.									9.6432 C10		
Eng. J4R, J4T										9.6432 C10		
2 I												
1.2	Petrol	55	02/03-06/07	ENGINE: FUJA								
All engines	01/03/05 ->, 01/10/06 ->, ->year 01/09/06, x 1, D.I.S., x 1, D.I.S.									9.6381 C10		
All engines	->year 01/02/05, x 1, D.I.S.									9.6432 C10		
All engines												4.7242
1.25	Petrol	55	04/03-06/07	ENGINE: FUJA								
All engines	01/03/05 ->, 01/10/06 ->, ->year 01/09/06, x 1, D.I.S., x 1, D.I.S.									9.6381 C10		
All engines	->year 01/02/05, x 1, D.I.S.									9.6432 C10		
All engines												4.7242
1.3 L	Petrol	67	04/03-06/07	ENGINE: ZJ-04								
All engines	01/03/05 ->, 01/10/06 ->, ->year 01/09/06, x 1, D.I.S., x 1, D.I.S.									9.6381 C10		
All engines	->year 01/02/05, x 1, D.I.S.									9.6432 C10		
All engines												4.7242
1.4	Petrol	59	02/03-06/07	ENGINE: FXJA								
All engines	01/03/05 ->, 01/10/06 ->, ->year 01/09/06, x 1, D.I.S., x 1, D.I.S.									9.6381 C10		
All engines	->year 01/02/05, x 1, D.I.S.									9.6432 C10		
All engines												4.7242
1.5	Petrol	82	04/03-06/07	ENGINE: ZY-VE								
All engines	22/02/05 ->									9.6381 C10		
All engines	->year 22/02/05									9.6432 C10		
All engines												4.7242
1.6	Petrol	74	02/03-06/07	ENGINE: FYJA								
All engines	01/03/05 ->, 01/10/06 ->, ->year 01/09/06, x 1, D.I.S., x 1, D.I.S.									9.6381 C10		
All engines	->year 01/02/05, x 1, D.I.S.									9.6432 C10		
All engines												4.7242
2 II												
1.3	Petrol	55	10/07-06/15	ENGINE: ZJ-46, ZJ-VE								
Eng. ZJ-46	->year 01/11/09, x 4, COIL ON PLUG									9.6414 C10		
Eng. ZJ-46	01/12/09 ->, x 4, COIL ON PLUG									9.6416 C10		
Eng. ZJ-VE	Qty: 4									9.6416 C10		
1.3	Petrol	63	10/07-06/15	ENGINE: ZJ-46, ZJ-VE								
Eng. ZJ-46	->year 01/11/09, x 4, COIL ON PLUG									9.6414 C10		
Eng. ZJ-46	01/12/09 ->, x 4, COIL ON PLUG									9.6416 C10		
Eng. ZJ-VE	Qty: 4									9.6416 C10		
1.3	Petrol	67	07/07-11/14	ENGINE: ZJ-VE								
All engines	Qty: 4									9.6416 C10		

A10	CONDENSER	A20	CONTACT SET	A40	DISTRIBUTOR CAP	A50	ROTOR	A70	PICK-UP
C10	COIL	C20	IGNITION MODULE	C30	ELECTRONIC IGNITION KIT	E01	IGNITION CABLE SET		

The present application list is a brief version. For the detailed information about the possibility of installation on a specific vehicle, please refer to our web-catalogue http://catalogo.facet.eu/

Vehicle	alim.	kW	Date	Engine	FUNCTIONS ON THE VEHICLE A10	A20	A40	A50	A70	C10 - C30	C20	E01
1.3 BiFuel	Petrol/ Liquified Petro-leum Gas (LPG)	55	05/11-11/14	**ZJ-46**								

Engine	Information	A10	A20	A40	A50	A70	C10 - C30		C20	E01
All engines	x 4, version 2, COIL ON PLUG						9.6414	C10		
All engines	x 4, version 1, COIL ON PLUG						9.6416	C10		

1.3 BiFuel	Petrol/ Liquified Petro-leum Gas (LPG)	62	05/11-11/14	**ZJ-46**								

Engine	Information	A10	A20	A40	A50	A70	C10 - C30		C20	E01
All engines	x 4, COIL ON PLUG						9.6416	C10		

1.3 MZR	Petrol	62	01/10-06/15	**ZJ-46, ZJ-VE**								

Engine	Information	A10	A20	A40	A50	A70	C10 - C30		C20	E01
Eng. ZJ-46	x 4, COIL ON PLUG						9.6416	C10		
Eng. ZJ-VE	Qty: 4						9.6416	C10		

1.5	Petrol	76	07/07-06/15	**ZY66, ZY-DE, ZY-VE**								

Engine	Information	A10	A20	A40	A50	A70	C10 - C30		C20	E01
Eng. ZY66	->year 01/11/09, x 4, COIL ON PLUG						9.6414	C10		
Eng. ZY66	01/12/09 ->, x 4, COIL ON PLUG						9.6416	C10		
Eng. ZY-DE, ZY-VE	Qty: 4						9.6416	C10		

1.5	Petrol	83	10/07-06/15	**ZY06**								

Engine	Information	A10	A20	A40	A50	A70	C10 - C30		C20	E01
All engines	x 4, COIL ON PLUG						9.6416	C10		

1.5 i	Petrol	76	05/10-06/15	**ZY-DE**								

Engine	Information	A10	A20	A40	A50	A70	C10 - C30		C20	E01
All engines	Qty: 4						9.6416	C10		

1.5 MZR	Petrol	75	06/11-06/15	**ZY05, ZY66**								

Engine	Information	A10	A20	A40	A50	A70	C10 - C30		C20	E01
Eng. ZY05	Qty: 4						9.6416	C10		
Eng. ZY66	x 4, COIL ON PLUG						9.6416	C10		

2 III

1.5	Petrol	55	08/14-11/17	**P5X0, P5X2, P5Y5, P5Y8, P5Z7, P5Z8, P5Z9**								

Engine	Information	A10	A20	A40	A50	A70	C10 - C30		C20	E01
All engines	x 4, COIL ON PLUG						9.6527	C10		

1.5	Petrol	79	11/14->	**P5Y4**								

Engine	Information	A10	A20	A40	A50	A70	C10 - C30		C20	E01
All engines	+start-stop function, Qty: 4						9.6527	C10		
All engines	x 4, +start-stop function, COIL ON PLUG						9.6527	C10		

1.5	Petrol	81	11/14->	**P5Y4, P5Y6**								

Engine	Information	A10	A20	A40	A50	A70	C10 - C30		C20	E01
All engines	+start-stop function, Qty: 4						9.6527	C10		

1.5	Petrol	85	01/15->	**P5Y5**								

Engine	Information	A10	A20	A40	A50	A70	C10 - C30		C20	E01
All engines	+start-stop function, Qty: 4						9.6527	C10		

A10	CONDENSER	**A20**	CONTACT SET	**A40**	DISTRIBUTOR CAP	**A50**	ROTOR	**A70**	PICK-UP
C10	COIL	**C20**	IGNITION MODULE	**C30**	ELECTRONIC IGNITION KIT	**E01**	IGNITION CABLE SET		

The present application list is a brief version. For the detailed information about the possibility of installation on a specific vehicle, please refer to our web-catalogue http://catalogo.facet.eu/

Vehicle	alim.	kW	Date	Engine	FUNCTIONS ON THE VEHICLE: A10	A20	A40	A50	A70	C10 - C30	C20	E01
1.5 SKYACTIV-G	Petrol	66	08/14-11/17	P5X0, P5X2, P5Y5, P5Y6, P5Y8, P5Z2, P5Z3, P5Z7, P5Z8, P5Z9								

Engine	Information	A10	A20	A40	A50	A70	C10 - C30		C20	E01
All engines	x 4, COIL ON PLUG						9.6527	C10		

1.5 SKYACTIV-G	Petrol	85	08/14->	P5X0, P5X2, P5Y5, P5Z3, P5Z7, P5Z8, P5Z9								

Engine	Information	A10	A20	A40	A50	A70	C10 - C30		C20	E01
All engines	x 4, COIL ON PLUG						9.6527	C10		

3

2.0	Petrol	108	09/03-06/06	LF17								

Engine	Information	A10	A20	A40	A50	A70	C10 - C30		C20	E01
All engines	x 4, COIL ON PLUG						9.6380	C10		

3 I

1.3	Petrol	62	10/03-06/09	ZJ07, ZJ30, ZJ-VE								

Engine	Information	A10	A20	A40	A50	A70	C10 - C30		C20	E01
Eng. ZJ07, ZJ30	x 4, COIL ON PLUG						9.6414	C10		
Eng. ZJ-VE	FOR MODEL: 2003, Qty: 4						9.6414	C10		
Eng. ZJ-VE	FOR MODEL: 2006, Qty: 4						9.6416	C10		

1.4	Petrol	59	02/04-06/09	FXJA								

Engine	Information	A10	A20	A40	A50	A70	C10 - C30		C20	E01
All engines	FOR MODEL: 2003, Qty: 4						9.6414	C10		
All engines	FOR MODEL: 2006, Qty: 4						9.6416	C10		

1.6	Petrol	77	10/03-06/09	B6ZE, Z6, Z601, Z627								

Engine	Information	A10	A20	A40	A50	A70	C10 - C30		C20	E01
Eng. B6ZE, Z6	FOR MODEL: 2003, Qty: 4						9.6414	C10		
Eng. Z601, Z627	->year 01/02/06, x 4, COIL ON PLUG						9.6414	C10		
Eng. B6ZE, Z6	FOR MODEL: 2006, Qty: 4						9.6416	C10		
Eng. Z601, Z627	01/03/06 ->, x 4, COIL ON PLUG						9.6416	C10		

2.0	Petrol	104	10/03-06/06	LF17								

Engine	Information	A10	A20	A40	A50	A70	C10 - C30		C20	E01
All engines	FOR MODEL: 2003, Qty: 4						9.6380	C10		

2.0	Petrol	108	10/03-06/06	LF17								

Engine	Information	A10	A20	A40	A50	A70	C10 - C30		C20	E01
All engines	FOR MODEL: 2003, Qty: 4						9.6380	C10		

2.0	Petrol	110	10/03-12/09	LF17, LF50, LF72, LFN7, LFN8								

Engine	Information	A10	A20	A40	A50	A70	C10 - C30		C20	E01
Eng. LF17	FOR MODEL: 2003, Qty: 4						9.6380	C10		
Eng. LF50, LF72, LFN7, LFN8	->year 01/02/06, x 4, COIL ON PLUG						9.6380	C10		

3 II

1.6 MZR	Petrol	77	12/08-09/14	Z6, Z668, Z682, Z683								

Engine	Information	A10	A20	A40	A50	A70	C10 - C30		C20	E01
Eng. Z668, Z682, Z683	x 4, COIL ON PLUG						9.6414	C10		
Eng. Z6	Qty: 4						9.6416	C10		

1.6 MZR	Petrol	79	01/10-12/13	Z6, Z682								

Engine	Information	A10	A20	A40	A50	A70	C10 - C30		C20	E01
Eng. Z682	x 4, COIL ON PLUG						9.6414	C10		
Eng. Z6	Qty: 4						9.6416	C10		

A10	CONDENSER	A20	CONTACT SET	A40	DISTRIBUTOR CAP	A50	ROTOR	A70	PICK-UP
C10	COIL	C20	IGNITION MODULE	C30	ELECTRONIC IGNITION KIT	E01	IGNITION CABLE SET		

The present application list is a brief version. For the detailed information about the possibility of installation on a specific vehicle, please refer to our web-catalogue http://catalogo.facet.eu/

Vehicle	alim.	kW	Date	Engine	FUNCTIONS ON THE VEHICLE							
					A10	A20	A40	A50	A70	C10 - C30	C20	E01

3 III

1.5	Petrol	74	09/13->	ENGINE: P5Y1, P5Y4, P5Y5, P5Z3

Engine	Information	A10	A20	A40	A50	A70	C10 - C30		C20	E01
All engines	x 4, COIL ON PLUG						9.6527	C10		

1.5	Petrol	82	09/13->	ENGINE: P5-VPS

Engine	Information	A10	A20	A40	A50	A70	C10 - C30		C20	E01
All engines	Qty: 4						9.6527	C10		

1.5	Petrol	88	10/13->	ENGINE: P5Y1, P5Y4, P5Y5, P5Z3

Engine	Information	A10	A20	A40	A50	A70	C10 - C30		C20	E01
All engines	x 4, COIL ON PLUG						9.6527	C10		

1.6	Petrol	77	09/13->	ENGINE: Z6Y1, Z6Y3

Engine	Information	A10	A20	A40	A50	A70	C10 - C30		C20	E01
All engines	x 4, COIL ON PLUG						9.6416	C10		

2.0	Petrol	110	11/13->	ENGINE: PEY7

Engine	Information	A10	A20	A40	A50	A70	C10 - C30		C20	E01
All engines	x 4, COIL ON PLUG						9.6527	C10		

2.0	Petrol	114	11/13->	ENGINE: LFX

Engine	Information	A10	A20	A40	A50	A70	C10 - C30		C20	E01
All engines	Qty: 4						9.6527	C10		

2.0	Petrol	121	07/13->	ENGINE: PEX2, PEXL, PEY5, PEY7

Engine	Information	A10	A20	A40	A50	A70	C10 - C30		C20	E01
All engines	x 4, COIL ON PLUG						9.6527	C10		

2.0	Petrol	88	09/13->	ENGINE: PEXL, PEY5, PEY7

Engine	Information	A10	A20	A40	A50	A70	C10 - C30		C20	E01
All engines	x 4, COIL ON PLUG						9.6527	C10		

2.0 Hybrid	Petrol/ Electric	60	10/14->	ENGINE: --

Engine	Information	A10	A20	A40	A50	A70	C10 - C30		C20	E01
All engines	Qty: 4						9.6527	C10		

2.0 Hybrid	Petrol/ Electric	73	10/14->	ENGINE: PE-VPH

Engine	Information	A10	A20	A40	A50	A70	C10 - C30		C20	E01
All engines	Qty: 4						9.6527	C10		

3 IV

1.5 SKYACTIV-G	Petrol	88	11/18->	ENGINE: P5X4

Engine	Information	A10	A20	A40	A50	A70	C10 - C30		C20	E01
All engines	x 4, Vehicle Equipment:for vehicles with cylinder shut-down, Vehicle Equipment:for vehicles without cylinder shutdown, COIL ON PLUG						9.6527	C10		

2.0 SKYACTIV-G	Petrol	110	11/18->	ENGINE: PEXN, PEXP

Engine	Information	A10	A20	A40	A50	A70	C10 - C30		C20	E01
All engines	x 4, Vehicle Equipment:for vehicles with cylinder shut-down, Vehicle Equipment:for vehicles without cylinder shutdown, COIL ON PLUG						9.6527	C10		

2.0 SKYACTIV-G M Hybrid	Petrol/ Electric	110	01/20->	ENGINE: PEXN

Engine	Information	A10	A20	A40	A50	A70	C10 - C30		C20	E01
All engines	x 4, COIL ON PLUG						9.6527	C10		

A10	CONDENSER	A20	CONTACT SET	A40	DISTRIBUTOR CAP	A50	ROTOR	A70	PICK-UP
C10	COIL	C20	IGNITION MODULE	C30	ELECTRONIC IGNITION KIT	E01	IGNITION CABLE SET		

The present application list is a brief version. For the detailed information about the possibility of installation on a specific vehicle, please refer to our web-catalogue http://catalogo.facet.eu/

Vehicle	alim.	kW	Date	Engine	FUNCTIONS ON THE VEHICLE							
					A10	A20	A40	A50	A70	C10 - C30	C20	E01
2.0 SKYACTIV-G M Hybrid	Petrol/ Electric	90	11/18->	**PEXN**								
All engines	x 4, COIL ON PLUG									9.6527 C10		
2.0 SKYACTIV-X M Hybrid	Petrol/ Electric	137	02/21->	**HFY7**								
All engines	x 4, COIL ON PLUG									9.6527 C10		
SKYACTIV-X M Hybrid	Petrol/ Electric	137	02/21->	**HFY7**								
All engines	x 4, COIL ON PLUG									9.6527 C10		
SKYACTIV-X M Hybrid AWD	Petrol/ Electric	137	02/21->	**HFY7**								
All engines	x 4, COIL ON PLUG									9.6527 C10		
323 IV												
1.1	Petrol	40	11/80-10/85	**E1**								
All engines	version Mitsubishi						2.8322/9					
1.3	Petrol	44	09/81-10/85	**E3**								
All engines	version Mitsubishi						2.8322/32	3.8331/8				
323 V												
1.1	Petrol	40	09/85-10/89	**E1**								
All engines	version Mitsubishi						2.8322/18					
1.3	Petrol	44	08/85-05/89	**E3**								
All engines	version Mitsubishi, no specific info conc. application available						2.8322/18, 2.8322/32	3.8331/8				
1.3	Petrol	50	01/86-06/87	**E393**								
All engines	version Mitsubishi, no specific info conc. application available						2.8322/18, 2.8322/32	3.8331/8				
1.3	Petrol	52	01/86-06/87	**E391**								
All engines	version Mitsubishi, no specific info conc. application available						2.8322/18, 2.8322/32	3.8331/8				
1.3 i	Petrol	49	09/85-08/89	**B3E**								
All engines	version Mitsubishi, no specific info conc. application available						2.8322/18, 2.8322/32	3.8331/8				
1.5	Petrol	54	01/87-10/89	**B5, B50, B53**								
All engines	version Mitsubishi, no specific info conc. application available						2.8322/18, 2.8322/32	3.8331/8				
1.5	Petrol	55	08/85-05/89	**B50, B53, E5**								
All engines	version Mitsubishi, no specific info conc. application available						2.8322/18, 2.8322/32	3.8331/8				

A10	CONDENSER	**A20**	CONTACT SET	**A40**	DISTRIBUTOR CAP	**A50**	ROTOR	**A70**	PICK-UP
C10	COIL	**C20**	IGNITION MODULE	**C30**	ELECTRONIC IGNITION KIT	**E01**	IGNITION CABLE SET		

The present application list is a brief version. For the detailed information about the possibility of installation on a specific vehicle, please refer to our web-catalogue http://catalogo.facet.eu/

Vehicle	alim.	kW	Date	Engine	FUNCTIONS ON THE VEHICLE A10	A20	A40	A50	A70	C10 - C30	C20	E01
1.6	Petrol	63	09/86-10/95	**93AF1006, B6E**								
All engines	version Mitsubishi, no specific info conc. application available					2.8322/22, 2.8322/32						
All engines	version Hitachi						3.7973					
All engines	version Mitsubishi						3.8331/8					
1.6 4x4	Petrol	63	05/90-03/93	**B65M, B6E**								
All engines	version Mitsubishi					2.8322/22	3.8331/8					
1.6 GT	Petrol	63	11/86-10/89	**93AF1006**								
All engines	super unlead (95), version Mitsubishi					2.8322/22	3.8331/8					
All engines	Super (98), version Mitsubishi					2.8322/25						
All engines	super unlead (95), version Hitachi						3.7973					
1.6 GT	Petrol	77	01/86-12/88	**93AF1006**								
All engines	super unlead (95), version Mitsubishi					2.8322/22	3.8331/8					
All engines	Super (98), version Mitsubishi					2.8322/25						
All engines	super unlead (95), version Hitachi						3.7973					
1.6i	Petrol	54	06/86-07/87	**B681, B682**								
All engines	Super (98), version Mitsubishi					2.8322/25						
All engines	super unlead (95), version Hitachi						3.7973					
1.6i 16v 4x4	Petrol	100	06/86-07/87	**B595**								
All engines	Super (98), version Mitsubishi					2.8322/25						
All engines	super unlead (95), version Hitachi						3.7973					
1.6i 16v Formula 4	Petrol	110	08/87-05/89	**B6F2**								
All engines	super unlead (95), version Mitsubishi					2.8322/22	3.8331/8					
All engines	Super (98), version Mitsubishi					2.8322/25						
323 VI												
1.3 16V	Petrol	55	06/89-03/91	**B384, B386, B387**								
All engines	version Mitsubishi					2.8322/31	3.8331/19					
All engines									9.6133	C10	9.4073	
1.8i 16v 4x4	Petrol	78	06/89-03/91	**BP51**								
All engines	version Mitsubishi					2.8322/21						
All engines									9.6133	C10		
1.8i 16v GRSi	Petrol	103	06/89-03/91	**BP22**								
All engines	version Mitsubishi					2.8322/21						
All engines									9.6133	C10		
1.8i 16v GT Formula 4	Petrol	122	04/91-04/94	**BP55**								
All engines	version Mitsubishi					2.8322/21						
All engines									9.6133	C10		

A10	CONDENSER	**A20**	CONTACT SET	**A40**	DISTRIBUTOR CAP	**A50**	ROTOR	**A70**	PICK-UP
C10	COIL	**C20**	IGNITION MODULE	**C30**	ELECTRONIC IGNITION KIT	**E01**	IGNITION CABLE SET		

The present application list is a brief version. For the detailed information about the possibility of installation on a specific vehicle, please refer to our web-catalogue http://catalogo.facet.eu/

Vehicle	alim.	kW	Date	Engine	FUNCTIONS ON THE VEHICLE A10	A20	A40	A50	A70	C10 - C30	C20	E01
1.8i 16v GT-R Formula 4	Petrol	138	04/91-04/94	**BP5J**								

Engine	Information	A10	A20	A40	A50	A70	C10 - C30	C20	E01
All engines	version Mitsubishi			2.8322/21					
All engines							9.6133 C10		

1.8i 16v Turbo 4x4	Petrol	122	06/89-03/91	**BP55**	

Engine	Information	A10	A20	A40	A50	A70	C10 - C30	C20	E01
All engines	version Mitsubishi			2.8322/21					
All engines							9.6133 C10		

323 VI C

1.3	Petrol	49	09/89-07/94	**B3E**	

Engine	Information	A10	A20	A40	A50	A70	C10 - C30	C20	E01
All engines					3.8331/13				

1.6	Petrol	62	09/89-06/91	**B6E**	

Engine	Information	A10	A20	A40	A50	A70	C10 - C30	C20	E01
All engines	version Mitsubishi			2.8322/21					
All engines	version Mitsubishi, no specific info conc. application available				3.8331/19				
All engines							9.6133 C10	9.4073	

1.6 16V	Petrol	65	03/91-10/94	**B6**	

Engine	Information	A10	A20	A40	A50	A70	C10 - C30	C20	E01
All engines	version Mitsubishi			2.8322/21					
All engines							9.6133 C10	9.4073	
All engines	no specific info conc. application available								4.9398

1.8 16V 4WD	Petrol	76	11/91-12/93	**BP**	

Engine	Information	A10	A20	A40	A50	A70	C10 - C30	C20	E01
All engines					3.8331/13				

1.8 16V GT	Petrol	94	09/89-03/93	**BP (DOHC)**	

Engine	Information	A10	A20	A40	A50	A70	C10 - C30	C20	E01
All engines					3.8331/13				

1.8 16V Turbo 4WD	Petrol	120	09/90-12/92	**BP Turbo**	

Engine	Information	A10	A20	A40	A50	A70	C10 - C30	C20	E01
All engines					3.8331/13				

323 VI F

1.6	Petrol	62	09/89-06/91	**B6E**	

Engine	Information	A10	A20	A40	A50	A70	C10 - C30	C20	E01
All engines	version Mitsubishi			2.8322/21					
All engines	version Mitsubishi, no specific info conc. application available				3.8331/19				
All engines							9.6133 C10	9.4073	

1.6 16V	Petrol	65	03/91-10/94	**B6**	

Engine	Information	A10	A20	A40	A50	A70	C10 - C30	C20	E01
All engines	version Mitsubishi			2.8322/21					
All engines							9.6133 C10	9.4073	
All engines	no specific info conc. application available								4.9398

1.8 16V	Petrol	76	08/89-07/94	**BP**	

Engine	Information	A10	A20	A40	A50	A70	C10 - C30	C20	E01
All engines	version Mitsubishi			2.8322/21					
All engines							9.6133 C10		4.9398

A10	CONDENSER	**A20**	CONTACT SET	**A40**	DISTRIBUTOR CAP	**A50**	ROTOR	**A70**	PICK-UP
C10	COIL	**C20**	IGNITION MODULE	**C30**	ELECTRONIC IGNITION KIT	**E01**	IGNITION CABLE SET		

The present application list is a brief version. For the detailed information about the possibility of installation on a specific vehicle, please refer to our web-catalogue http://catalogo.facet.eu/

Vehicle	alim.	kW	Date	Engine	FUNCTIONS ON THE VEHICLE A10	A20	A40	A50	A70	C10 - C30	C20	E01
1.8 16V GT	Petrol	94	08/89-07/94	**BP (DOHC)**								
All engines	version Mitsubishi						2.8322/21					
All engines										9.6133 C10		4.9398
1.8i 16v GRSi	Petrol	103	06/89-03/91	**BP31**								
All engines	version Mitsubishi						2.8322/21					
All engines										9.6133 C10		4.9398
323 VI S												
1.3	Petrol	49	09/89-06/91	**B383, B3E**								
All engines	version Mitsubishi						2.8322/31	3.8331/19				
All engines											9.4073	
1.3 16V	Petrol	54	04/91-07/94	**B3 (16V)**								
All engines	version Mitsubishi						2.8322/21, 2.8322/31					
All engines	version Mitsubishi, no specific info conc. application available							3.8331/19				
All engines										9.6133 C10		4.9398
All engines	->ch. 853897										9.4073	
1.6	Petrol	62	09/89-06/91	**B6E**								
All engines	version Mitsubishi						2.8322/21					
All engines	version Mitsubishi, no specific info conc. application available							3.8331/19				
All engines										9.6133 C10	9.4073	
1.6 16V	Petrol	65	08/89-10/96	**B6**								
All engines	version Mitsubishi						2.8322/21, 2.8322/31					
All engines	version Mitsubishi, no specific info conc. application available							3.8331/19				
All engines										9.6133 C10		4.9398
All engines	->ch. 853897										9.4073	
1.8 16V	Petrol	76	08/89-07/94	**BP52**								
All engines	version Mitsubishi						2.8322/21					
All engines										9.6133 C10		4.9398
1.8 16V 4WD	Petrol	76	09/91-07/94	**BP52**								
All engines	version Mitsubishi						2.8322/21					
All engines										9.6133 C10		4.9398
1.8 16V Turbo 4WD	Petrol	120	01/91-07/94	**BP Turbo**								
All engines	version Mitsubishi						2.8322/21					
All engines										9.6133 C10		
323 VII												
1.5 16V	Petrol	65	07/94-09/98	**Z5-DE**								
All engines	version Mitsubishi						2.8322/50	3.8331/32				
All engines												4.9738

A10	CONDENSER	**A20**	CONTACT SET	**A40**	DISTRIBUTOR CAP	**A50**	ROTOR	**A70**	PICK-UP
C10	COIL	**C20**	IGNITION MODULE	**C30**	ELECTRONIC IGNITION KIT	**E01**	IGNITION CABLE SET		

The present application list is a brief version. For the detailed information about the possibility of installation on a specific vehicle, please refer to our web-catalogue http://catalogo.facet.eu/

Vehicle	alim.	kW	Date	Engine	FUNCTIONS ON THE VEHICLE							
					A10	A20	A40	A50	A70	C10 - C30	C20	E01
1.8 16V	Petrol	84	08/94-09/98	ENGINE BP-ZE								
Engine: All engines	Information: version Mitsubishi						2.8322/50	3.8331/32				
Engine: All engines	Information:											4.9231
2.0 24V	Petrol	106	08/94-09/98	ENGINE KF								
Engine: All engines	Information: version Mitsubishi						2.8322/49	3.8331/34				
Engine: All engines	Information:											4.9760
323 VII C												
1.3 16V	Petrol	54	08/94-09/98	ENGINE B3 (16V)								
Engine: All engines	Information: version Mitsubishi						2.8322/54	3.8331/32				
1.5 16V	Petrol	65	08/94-09/98	ENGINE Z5-DE								
Engine: All engines	Information: version Mitsubishi						2.8322/50	3.8331/32				
Engine: All engines	Information:											4.9738
1.8 16V	Petrol	84	08/94-09/98	ENGINE BP-ZE								
Engine: All engines	Information: version Mitsubishi						2.8322/50	3.8331/32				
Engine: All engines	Information:											4.9231
323 VII P												
1.3 16V	Petrol	54	10/96-09/98	ENGINE B3 (16V)								
Engine: All engines	Information: version Mitsubishi						2.8322/54	3.8331/32				
1.5 16V	Petrol	65	10/96-09/98	ENGINE Z5-DE								
Engine: All engines	Information: version Mitsubishi						2.8322/50	3.8331/32				
Engine: All engines	Information:											4.9738
323 VIII F												
1.4	Petrol	53	01/01-05/04	ENGINE B3 (16V)								
Engine: All engines	Information: version Mitsubishi						2.8322/54	3.8331/32				
Engine: All engines	Information:											4.9741
1.4 16V	Petrol	54	09/98-01/01	ENGINE B3 ME								
Engine: All engines	Information: version Mitsubishi						2.8322/54	3.8331/32				
Engine: All engines	Information:											4.9741
1.5 16V	Petrol	65	09/98-01/01	ENGINE ZL05, ZL06								
Engine: All engines	Information:											4.9729
1.6	Petrol	70	01/01-05/04	ENGINE ZM								
Engine: All engines	Information:											4.9729
1.6	Petrol	72	01/01-05/04	ENGINE ZM								
Engine: All engines	Information:											4.9729

A10	CONDENSER	A20	CONTACT SET	A40	DISTRIBUTOR CAP	A50	ROTOR	A70	PICK-UP
C10	COIL	C20	IGNITION MODULE	C30	ELECTRONIC IGNITION KIT	E01	IGNITION CABLE SET		

The present application list is a brief version. For the detailed information about the possibility of installation on a specific vehicle, please refer to our web-catalogue http://catalogo.facet.eu/

Vehicle	alim.	kW	Date	Engine	FUNCTIONS ON THE VEHICLE							
					A10	A20	A40	A50	A70	C10 - C30	C20	E01
1.8 Astina	Petrol	92	09/98-05/04	**BP (DOHC)**								
Engine: All engines	Information:											4.9767
1.9 16V	Petrol	84	09/98-01/01	**FP, FP55**								
Engine: All engines	Information:											4.9740
2.0	Petrol	96	01/01-05/04	**FS7E, FS7G**								
Engine: All engines	Information:											4.9767
2.0	Petrol	98	02/00-09/04	**FS**								
Engine: All engines	Information:											4.9767
323 VIII S												
1.3	Petrol	53	01/01-05/04	**B3 (16V)**								
Engine: All engines	Information: version Mitsubishi						2.8322/54	3.8331/32				
Engine: All engines	Information:											4.9741
1.3 16V	Petrol	54	08/94-01/01	**B3 (16V), B3 ME**								
Engine: All engines	Information: version Mitsubishi						2.8322/54	3.8331/32				
Engine: Eng. B3 ME	Information:											4.9741
1.5 16V	Petrol	65	08/94-01/01	**Z5-DE, ZL05, ZL06**								
Engine: Eng. Z5-DE	Information: version Mitsubishi						2.8322/50	3.8331/32				
Engine: Eng. ZL05, ZL06	Information:											4.9729
Engine: Eng. Z5-DE	Information:											4.9738
1.6	Petrol	70	01/01-05/04	**ZM**								
Engine: All engines	Information:											4.9729
1.6	Petrol	72	01/01-05/04	**ZM**								
Engine: All engines	Information:											4.9729
1.8 16V	Petrol	84	08/94-09/98	**BP-ZE**								
Engine: All engines	Information: version Mitsubishi						2.8322/50	3.8331/32				
Engine: All engines	Information:											4.9231
1.8 Protege	Petrol	92	05/98-05/04	**BP (DOHC)**								
Engine: All engines	Information:											4.9767
1.9 16V	Petrol	84	09/98-05/04	**FP, FP55**								
Engine: All engines	Information:											4.9740
2.0	Petrol	96	01/01-05/04	**FS7E, FS7G**								
Engine: All engines	Information:											4.9767

A10	CONDENSER	**A20**	CONTACT SET	**A40**	DISTRIBUTOR CAP	**A50**	ROTOR	**A70**	PICK-UP
C10	COIL	**C20**	IGNITION MODULE	**C30**	ELECTRONIC IGNITION KIT	**E01**	IGNITION CABLE SET		

Vehicle	alim.	kW	Date	Engine	FUNCTIONS ON THE VEHICLE A10	A20	A40	A50	A70	C10 - C30	C20	E01
2.0	Petrol	98	02/00-05/04	FS								
Engine: All engines — Information:												4.9767
6 I												
1.8	Petrol	88	08/02-08/07	L813, L823, L828								
Engine: All engines — Information: FOR MODEL: 2002												4.7245
2.0	Petrol	104	06/02-08/07	LF17, LF18								
Engine: All engines — Information:												4.7245
2.3	Petrol	122	01/02-02/08	L3C1								
Engine: All engines — Information:												4.7245
2.3 AWD	Petrol	119	11/02-08/07	L3C1								
Engine: All engines — Information:												4.7245
6 III												
2.0	Petrol	107	01/13->	PEXB, PEXL, PEY5, PEY7								
Engine: All engines — Information: x 4, COIL ON PLUG										9.6527 C10		
2.0	Petrol	110	12/12->	PEXL, PEY5, PEY7								
Engine: All engines — Information: x 4, COIL ON PLUG										9.6527 C10		
2.0	Petrol	114	12/12->	PE-VPR, PEY5, PEY7								
Engine: All engines — Information: Qty: 4										9.6527 C10		
2.0	Petrol	121	01/13->	PEXB, PEXL, PEY5, PEY7								
Engine: All engines — Information: x 4, COIL ON PLUG										9.6527 C10		
2.5	Petrol	138	12/12->	PYY1								
Engine: All engines — Information: Qty: 4										9.6527 C10		
2.5	Petrol	140	03/18->	PYZC								
Engine: All engines — Information: x 4, Vehicle Equipment:for vehicles with cylinder shut-down, Vehicle Equipment:for vehicles without cylinder shutdown, COIL ON PLUG										9.6527 C10		
2.5	Petrol	141	12/12->	PYY1, PYY3, PY-Y8, PY-ZA								
Engine: All engines — Information: x 4, COIL ON PLUG										9.6527 C10		
2.5	Petrol	143	03/18->	PYZ8, PYZC								
Engine: All engines — Information: x 4, +brake energy recovery, -brake energy recovery, COIL ON PLUG										9.6527 C10		

A10	CONDENSER	A20	CONTACT SET	A40	DISTRIBUTOR CAP	A50	ROTOR	A70	PICK-UP
C10	COIL	C20	IGNITION MODULE	C30	ELECTRONIC IGNITION KIT	E01	IGNITION CABLE SET		

The present application list is a brief version. For the detailed information about the possibility of installation on a specific vehicle, please refer to our web-catalogue http://catalogo.facet.eu/

Vehicle	alim.	kW	Date	Engine	FUNCTIONS ON THE VEHICLE A10	A20	A40	A50	A70	C10 - C30	C20	E01
2.5	Petrol	170	03/18->	PYZ4								
Engine: All engines	Information: LHD, x 4, Vehicle Equipment:for vehicles with cylinder shutdown, Vehicle Equipment:for vehicles without cylinder shutdown, COIL ON PLUG --- RHD, x 4, +brake energy recovery, -brake energy recovery, COIL ON PLUG									9.6527 C10		
626 III												
1.6	Petrol	59	11/82-09/87	F6								
Engine: All engines	Information: version Mitsubishi						2.8322/9					
2.0	Petrol	68	01/85-01/90	FE (8V)								
Engine: All engines	Information: version Mitsubishi						2.8322/9					
2.0	Petrol	74	03/83-09/87	FE (8V)								
Engine: All engines	Information: version Mitsubishi						2.8322/9					
2.0	Petrol	88	01/86-09/87	FE (8V)								
Engine: All engines	Information: version Mitsubishi						2.8322/9					
626 IV												
1.8	Petrol	65	09/87-05/92	F8 (12V)								
Engine: All engines	Information: version Mitsubishi, no specific info conc. application available						2.8322/25, 2.8322/32	3.8331/8				
1.8	Petrol	69	11/87-05/92	F8 (12V)								
Engine: All engines	Information: version Mitsubishi, no specific info conc. application available						2.8322/25, 2.8322/32	3.8331/8				
2.0	Petrol	66	09/87-10/90	FE (12V), FE (8V)								
Engine: All engines	Information: -catalytic converter, version Mitsubishi						2.8322/25					
Engine: All engines	Information: +catalytic converter, version Mitsubishi						2.8322/32	3.8331/8				
2.0 12V	Petrol	79	09/87-05/92	FE (12V)								
Engine: All engines	Information: -catalytic converter, version Mitsubishi						2.8322/25					
Engine: All engines	Information: +catalytic converter, version Mitsubishi						2.8322/32					
Engine: All engines	Information: super unlead (95), version Mitsubishi							3.8331/8				
2.0 16V	Petrol	103	11/87-05/92	FE (16V)								
Engine: All engines	Information: version Mitsubishi						2.8322/21					
2.0 16V	Petrol	109	06/87-09/89	FE (16V)								
Engine: All engines	Information: version Mitsubishi						2.8322/21					
2.2 12V	Petrol	85	11/87-04/92	F2								
Engine: All engines	Information: 4WD, version Mitsubishi						2.8322/21	3.8331/8				
Engine: All engines	Information: version Mitsubishi						2.8322/25					
2.2 12V 4WD	Petrol	85	11/87-07/90	F2								
Engine: All engines	Information: 4WD, version Mitsubishi						2.8322/21	3.8331/8				

A10	CONDENSER	A20	CONTACT SET	A40	DISTRIBUTOR CAP	A50	ROTOR	A70	PICK-UP
C10	COIL	C20	IGNITION MODULE	C30	ELECTRONIC IGNITION KIT	E01	IGNITION CABLE SET		

The present application list is a brief version. For the detailed information about the possibility of installation on a specific vehicle, please refer to our web-catalogue http://catalogo.facet.eu/

Vehicle	alim.	kW	Date	Engine	FUNCTIONS ON THE VEHICLE A10	A20	A40	A50	A70	C10 - C30	C20	E01
2.2 12V 4WD	Petrol	85	11/87-07/90	F2								

Engine	Information	A10	A20	A40	A50	A70	C10 - C30	C20	E01
All engines	version Mitsubishi			2.8322/25					

626 V

				ENGINE
1.8	Petrol	66	08/94-04/97	FP01LP

Engine	Information	A10	A20	A40	A50	A70	C10 - C30	C20	E01
All engines	version Hitachi, no specific info conc. application available			2.7977, 2.7992	3.7994, 3.8002				
All engines	version Mitsubishi, no specific info conc. application available				3.8331/32, 3.8331/37				
All engines									4.8884

				ENGINE
1.8	Petrol	77	08/91-04/97	FP

Engine	Information	A10	A20	A40	A50	A70	C10 - C30	C20	E01
All engines	version Hitachi, no specific info conc. application available			2.7977, 2.7992	3.7994, 3.8002				
All engines	version Mitsubishi, no specific info conc. application available				3.8331/32, 3.8331/37				
All engines									4.8884

				ENGINE
1.8 i	Petrol	66	08/94-04/97	--

Engine	Information	A10	A20	A40	A50	A70	C10 - C30	C20	E01
All engines	version Hitachi, no specific info conc. application available			2.7977, 2.7992	3.7994, 3.8002				
All engines	version Mitsubishi, no specific info conc. application available				3.8331/32, 3.8331/37				
All engines									4.8884

				ENGINE
1.8 i	Petrol	77	08/91-04/97	FP

Engine	Information	A10	A20	A40	A50	A70	C10 - C30	C20	E01
All engines	version Hitachi, no specific info conc. application available			2.7977, 2.7992	3.7994, 3.8002				
All engines	version Mitsubishi, no specific info conc. application available				3.8331/32, 3.8331/37				
All engines									4.8884

				ENGINE
1.8 i	Petrol	78	05/94-06/97	FP

Engine	Information	A10	A20	A40	A50	A70	C10 - C30	C20	E01
All engines	version Hitachi, no specific info conc. application available			2.7977, 2.7992	3.7994, 3.8002				
All engines	version Mitsubishi, no specific info conc. application available				3.8331/32, 3.8331/37				
All engines									4.8884

				ENGINE
2.0 i	Petrol	85	08/91-04/97	FS

Engine	Information	A10	A20	A40	A50	A70	C10 - C30	C20	E01
All engines	->year 30/04/94, version Hitachi			2.7977	3.7994				
All engines	01/05/94 ->, version Hitachi			2.7992	3.8002				
All engines	01/05/94 ->, version Mitsubishi				3.8331/32				
All engines	->year 30/04/94, version Mitsubishi				3.8331/37				
All engines									4.8884

				ENGINE
2.0 i 4WD	Petrol	85	04/92-04/97	FS

Engine	Information	A10	A20	A40	A50	A70	C10 - C30	C20	E01
All engines	->year 30/04/94, version Hitachi			2.7977	3.7994				
All engines	01/05/94 ->, version Hitachi			2.7992	3.8002				
All engines	01/05/94 ->, version Mitsubishi				3.8331/32				
All engines	->year 30/04/94, version Mitsubishi				3.8331/37				
All engines									4.8884

				ENGINE
2.5 24V	Petrol	120	08/94-04/97	KL

Engine	Information	A10	A20	A40	A50	A70	C10 - C30	C20	E01
All engines	version Mitsubishi			2.8322/49	3.8331/34				
All engines	->ch. 498325								4.9760

A10	CONDENSER	A20	CONTACT SET	A40	DISTRIBUTOR CAP	A50	ROTOR	A70	PICK-UP
C10	COIL	C20	IGNITION MODULE	C30	ELECTRONIC IGNITION KIT	E01	IGNITION CABLE SET		

The present application list is a brief version. For the detailed information about the possibility of installation on a specific vehicle, please refer to our web-catalogue http://catalogo.facet.eu/

Vehicle	alim.	kW	Date	Engine	FUNCTIONS ON THE VEHICLE A10	A20	A40	A50	A70	C10 - C30	C20	E01
2.5 24V	Petrol	121	01/92-04/97	KL								
Engine	Information						2.8322/37	3.8331/33				
All engines	version Mitsubishi											4.9760
All engines												
626 VI												
1.8	Petrol	66	05/97-01/00	FPY3								
Engine	Information									9.6035 C10		4.9739
All engines												
1.8	Petrol	74	12/99-10/02	FP, FP9A								
Engine	Information									9.6035 C10		
All engines												4.9739
All engines	->ch. 211589											
2.0	Petrol	100	04/98-10/02	FS2C								
Engine	Information											4.9739
All engines	->ch. 211589											
2.0	Petrol	85	05/97-10/02	FS								
Engine	Information									9.6035, 9.6212 C10		
All engines												4.9739
All engines	->ch. 211589											
2.0 H.P.	Petrol	100	02/98-10/02	FS2C								
Engine	Information											4.9739
All engines	->ch. 211589											
929 I												
2.0	Petrol	66	05/79-07/86	MA								
Engine	Information					1.5084	2.8303/1	3.8323				
All engines	version Mitsubishi											
929 II												
2.0	Petrol	74	03/84-07/87	FE (8V)								
Engine	Information						2.8322/9	3.8323				
All engines	version Mitsubishi											
929 III												
2.0	Petrol	85	06/87-05/89	FE (8V), FEFA								
Engine	Information						2.8322/32	3.8331/8				
All engines	version Mitsubishi											
2.2 12V	Petrol	85	01/88-04/89	F2, F21, F2E								
Engine	Information						2.8322/17					
All engines	->ch. 102442, version Mitsubishi						2.8322/32					
All engines	ch. 102442 ->, version Mitsubishi							3.8331/8				
All engines	version Mitsubishi											
2.2 i	Petrol	100	05/87-12/88	F2-EGI								
Engine	Information						2.8322/17					
All engines	->ch. 102442, version Mitsubishi						2.8322/32					
All engines	ch. 102442 ->, version Mitsubishi							3.8331/8				
All engines	version Mitsubishi											
2.2i 12v	Petrol	100	06/89-09/92	F2E6, F2E7								
Engine	Information						2.8322/32	3.8331/8				
All engines	version Mitsubishi											

A10	CONDENSER	**A20**	CONTACT SET	**A40**	DISTRIBUTOR CAP	**A50**	ROTOR	**A70**	PICK-UP
C10	COIL	**C20**	IGNITION MODULE	**C30**	ELECTRONIC IGNITION KIT	**E01**	IGNITION CABLE SET		

The present application list is a brief version. For the detailed information about the possibility of installation on a specific vehicle, please refer to our web-catalogue http://catalogo.facet.eu/

Vehicle	alim.	kW	Date	Engine	FUNCTIONS ON THE VEHICLE							
					A10	A20	A40	A50	A70	C10 - C30	C20	E01
B-SERIE												
2.2 4WD	Petrol	60	02/99-11/06	ENGINE: R5A2								
Engine: All engines	Information: version Mitsubishi						2.8322/21					
BT-50												
2.2	Petrol	73	10/06-06/13	ENGINE: --								
Engine: All engines	Information: version Mitsubishi						2.8322/21					
2.2	Petrol	75	09/06->	ENGINE: F2E								
Engine: All engines	Information: version Mitsubishi						2.8322/21					
2.6	Petrol	90	10/06-06/13	ENGINE: G6Y1								
Engine: All engines	Information: version Mitsubishi						2.8322/21					
2.6	Petrol	92	10/06-12/15	ENGINE: G6Y1								
Engine: All engines	Information: version Mitsubishi						2.8322/21					
2.6	Petrol	99	09/06->	ENGINE: G6								
Engine: All engines	Information: version Mitsubishi						2.8322/21					
CX-3												
2.0 SKYACTIV-G	Petrol	110	05/18->	ENGINE: PEXB								
Engine: All engines	Information: x 4, COIL ON PLUG									9.6527 C10		
2.0 SKYACTIV-G	Petrol	88	05/15->	ENGINE: PEX3, PEXB								
Engine: All engines	Information: x 4, COIL ON PLUG									9.6527 C10		
2.0 SKYACTIV-G	Petrol	89	02/18->	ENGINE: PEXB, PEXT								
Engine: All engines	Information: x 4, COIL ON PLUG									9.6527 C10		
2.0 SKYACTIV-G AWD	Petrol	110	05/15->	ENGINE: PEX3, PEXB, PEXT								
Engine: All engines	Information: x 4, COIL ON PLUG									9.6527 C10		
CX-30												
e-SKYACTIV-X M Hybrid	Petrol/ Electric	137	06/21->	ENGINE: HFY7								
Engine: All engines	Information: x 4, Vehicle Equipment:for vehicles with cylinder shutdown, COIL ON PLUG									9.6527 C10		
e-SKYACTIV-X M Hybrid AWD	Petrol/ Electric	137	06/21->	ENGINE: HFY7								
Engine: All engines	Information: x 4, Vehicle Equipment:for vehicles with cylinder shutdown, COIL ON PLUG									9.6527 C10		
SKYACTIV-G M Hybrid	Petrol/ Electric	110	01/20->	ENGINE: PEXW								
Engine: All engines	Information: x 4, COIL ON PLUG									9.6527 C10		

A10	CONDENSER	A20	CONTACT SET	A40	DISTRIBUTOR CAP	A50	ROTOR	A70	PICK-UP
C10	COIL	C20	IGNITION MODULE	C30	ELECTRONIC IGNITION KIT	E01	IGNITION CABLE SET		

The present application list is a brief version. For the detailed information about the possibility of installation on a specific vehicle, please refer to our web-catalogue http://catalogo.facet.eu/

Vehicle	alim.	kW	Date	Engine	FUNCTIONS ON THE VEHICLE A10	A20	A40	A50	A70	C10 - C30	C20	E01
SKYACTIV-G M Hybrid	Petrol/ Electric	90	07/19->	PEXN						9.6527 C10		
SKYACTIV-G M Hybrid AWD	Petrol/ Electric	110	01/20->	PEXW						9.6527 C10		
SKYACTIV-G M Hybrid AWD	Petrol/ Electric	90	07/19->	PEXN						9.6527 C10		
SKYACTIV-X M Hybrid	Petrol/ Electric	132	07/19->	HFY1						9.6527 C10		
SKYACTIV-X M Hybrid AWD	Petrol/ Electric	132	07/19->	HFY1						9.6527 C10		
CX-5												
2.0	Petrol	110	02/12->	PEXB, PEXP, PEY5						9.6527 C10		
2.0	Petrol	114	07/12->	PEY4, PEY5						9.6527 C10 9.6527 C10		
2.0	Petrol	115	01/12->	PE-VPS, PEY7						9.6527 C10 9.6527 C10		
2.0	Petrol	121	11/11->	PEX3, PEXB, PEXP, PEY6, PEY7						9.6527 C10		
2.0 AWD	Petrol	110	02/12->	PEXB, PEXP, PEY5						9.6527 C10		
2.0 AWD	Petrol	113	02/12->	PEY4, PEY5						9.6527 C10 9.6527 C10		
2.0 AWD	Petrol	114	07/12->	PEY4, PEY5						9.6527 C10		

Engine	Information
All engines	x 4, Vehicle Equipment:for vehicles with cylinder shutdown, COIL ON PLUG
All engines	x 4, COIL ON PLUG
All engines	x 4, Vehicle Equipment:for vehicles with cylinder shutdown, COIL ON PLUG
All engines	x 4, Vehicle Equipment:for vehicles with cylinder shutdown, COIL ON PLUG
All engines	x 4, COIL ON PLUG
All engines All engines	Qty: 4 x 4, COIL ON PLUG
Eng. PE-VPS Eng. PEY7	Qty: 4 x 4, COIL ON PLUG
All engines	LHD, x 4, COIL ON PLUG, x 4, +brake energy recovery, -brake energy recovery, COIL ON PLUG --- RHD, x 4, COIL ON PLUG
All engines	x 4, COIL ON PLUG
All engines All engines	Qty: 4 x 4, COIL ON PLUG
All engines	Qty: 4

A10	CONDENSER	**A20**	CONTACT SET	**A40**	DISTRIBUTOR CAP	**A50**	ROTOR	**A70**	PICK-UP
C10	COIL	**C20**	IGNITION MODULE	**C30**	ELECTRONIC IGNITION KIT	**E01**	IGNITION CABLE SET		

The present application list is a brief version. For the detailed information about the possibility of installation on a specific vehicle, please refer to our web-catalogue http://catalogo.facet.eu/

Vehicle	alim.	kW	Date	Engine	FUNCTIONS ON THE VEHICLE							
					A10	A20	A40	A50	A70	C10 - C30	C20	E01
2.0 AWD	Petrol	115	01/12->	PE-VPS, PEY7								
Eng. PE-VPS	Qty: 4									9.6527 C10		
Eng. PEY7	x 4, COIL ON PLUG									9.6527 C10		
2.0 AWD	Petrol	118	11/11->	PEX3, PEY6, PEY7								
All engines	x 4, +brake energy recovery, -brake energy recovery, COIL ON PLUG, COIL ON PLUG									9.6527 C10		
2.0 AWD	Petrol	121	06/18->	PEXB, PEXP								
All engines	x 4, COIL ON PLUG									9.6527 C10		
2.0 SKYACTIV-G	Petrol	120	03/18->	PEXB, PEXP								
All engines	x 4, COIL ON PLUG									9.6527 C10		
2.0 SKYACTIV-G AWD	Petrol	120	03/18->	PEXB, PEXP								
All engines	x 4, COIL ON PLUG									9.6527 C10		
2.5	Petrol	138	02/13->	PY-VPS								
All engines	Qty: 4									9.6527 C10		
2.5	Petrol	141	03/15->	PYY1								
All engines	Qty: 4									9.6527 C10		
2.5	Petrol	143	05/17->	PYZ8, PYZC								
All engines	x 4, Vehicle Equipment:for vehicles with cylinder shut-down, Vehicle Equipment:for vehicles without cylinder shutdown, COIL ON PLUG									9.6527 C10		
2.5 4WD	Petrol	135	07/14->	PY-VPS								
All engines	Qty: 4									9.6527 C10		
2.5 AWD	Petrol	141	02/15-02/17	PYY1								
All engines	x 4, COIL ON PLUG									9.6527 C10		
2.5 AWD	Petrol	143	05/17->	PY-Y8, PYZ8, PY-ZA, PYZC								
All engines	x 4, +brake energy recovery, -brake energy recovery, COIL ON PLUG									9.6527 C10		
SKYACTIV-G	Petrol	121	04/15-02/17	PEY7								
All engines	x 4, COIL ON PLUG									9.6527 C10		
SKYACTIV-G AWD	Petrol	118	04/15-02/17	PEY7								
All engines	x 4, COIL ON PLUG									9.6527 C10		
SKYACTIV-G AWD	Petrol	141	04/15-02/17	PYY1								
All engines	x 4, COIL ON PLUG									9.6527 C10		

A10	CONDENSER	A20	CONTACT SET	A40	DISTRIBUTOR CAP	A50	ROTOR	A70	PICK-UP
C10	COIL	C20	IGNITION MODULE	C30	ELECTRONIC IGNITION KIT	E01	IGNITION CABLE SET		

The present application list is a brief version. For the detailed information about the possibility of installation on a specific vehicle, please refer to our web-catalogue http://catalogo.facet.eu/

Vehicle	alim.	kW	Date	Engine	FUNCTIONS ON THE VEHICLE A10	A20	A40	A50	A70	C10 - C30	C20	E01
CX-9												
2.5 T AWD	Petrol	170	06/16->	PYZ4						9.6527 C10		
DEMIO												
1.3 16V	Petrol	46	08/98-07/03	B3 ME			2.8322/50	3.8331/32				
1.5 16V	Petrol	55	04/00-07/03	B5 E			2.8322/50	3.8331/32				
E												
E2000 4WD	Petrol	60	10/88-09/89	FEBN			2.8322/32	3.8331/8				
E2000												
2.0	Petrol	60	10/89-05/95	FEBN			2.8322/32	3.8331/8				
2.0i 12v	Petrol	71	04/97->	FERW, FEY9			2.8322/21			9.6266S C10		
2.0i 12v 4x4	Petrol	71	09/90-08/99	FEJM, FEY9			2.8322/21			9.6266S C10		
MIATA												
1.6i 16v	Petrol	85	03/90-08/93	CE16I								4.9745
1.6i 16v GT	Petrol	95	11/90-08/93	CE16T								4.9745
1.8i [USA]	Petrol	0	01/94->	--								4.9745
MPV I												
3.0	Petrol	112	09/88-12/91	JE94				3.8331/34				
3.0 i V6	Petrol	109	11/89-09/99	JE94				3.8331/34				
3.0 i V6	Petrol	113	11/88-05/99	JE94				3.8331/34				

Engine	Information
All engines	x 4, COIL ON PLUG
All engines	version Mitsubishi
All engines	version Mitsubishi
All engines	version Mitsubishi
All engines	version Mitsubishi
All engines	
All engines	
All engines	
All engines	version Mitsubishi
All engines	version Mitsubishi
All engines	version Mitsubishi

A10	CONDENSER	**A20**	CONTACT SET	**A40**	DISTRIBUTOR CAP	**A50**	ROTOR	**A70**	PICK-UP
C10	COIL	**C20**	IGNITION MODULE	**C30**	ELECTRONIC IGNITION KIT	**E01**	IGNITION CABLE SET		

The present application list is a brief version. For the detailed information about the possibility of installation on a specific vehicle, please refer to our web-catalogue http://catalogo.facet.eu/

Vehicle	alim.	kW	Date	Engine	FUNCTIONS ON THE VEHICLE A10	A20	A40	A50	A70	C10 - C30	C20	E01

MPV II

				ENGINE
2.0	Petrol	90	09/99-08/00	FS-DS

Engine	Information	A10	A20	A40	A50	A70	C10 - C30	C20	E01
All engines									4.9767

				ENGINE
2.3	Petrol	104	07/02-02/06	L3

Engine	Information	A10	A20	A40	A50	A70	C10 - C30	C20	E01
All engines									4.7245

MX-3

				ENGINE
1.6	Petrol	66	05/91-10/93	B69

Engine	Information	A10	A20	A40	A50	A70	C10 - C30	C20	E01
All engines	version Mitsubishi			2.8322/21					
All engines							9.6133 C10		

				ENGINE
1.6 i	Petrol	79	11/93-09/98	B6D

Engine	Information	A10	A20	A40	A50	A70	C10 - C30	C20	E01
All engines	version Mitsubishi			2.8322/50	3.8331/32				
All engines									4.9231

				ENGINE
1.8 i V6	Petrol	95	01/94-10/97	K838

Engine	Information	A10	A20	A40	A50	A70	C10 - C30	C20	E01
All engines	version Mitsubishi			2.8322/49	3.8331/34				
All engines									4.9760

				ENGINE
1.8 i V6	Petrol	98	01/92-01/94	K819

Engine	Information	A10	A20	A40	A50	A70	C10 - C30	C20	E01
All engines	version Mitsubishi			2.8322/37	3.8331/33				

				ENGINE
1.8 i V6	Petrol	99	01/96-10/97	K8-ZE

Engine	Information	A10	A20	A40	A50	A70	C10 - C30	C20	E01
All engines	version Mitsubishi			2.8322/49	3.8331/34				
All engines									4.9760

MX-5 I

				ENGINE
1.6	Petrol	66	01/95-04/98	8AN1

Engine	Information	A10	A20	A40	A50	A70	C10 - C30	C20	E01
All engines									4.9745

				ENGINE
1.6	Petrol	85	05/90-01/94	B64F

Engine	Information	A10	A20	A40	A50	A70	C10 - C30	C20	E01
All engines	ch. 118792 ->								4.9745

				ENGINE
1.8	Petrol	96	01/93-04/98	BPF1

Engine	Information	A10	A20	A40	A50	A70	C10 - C30	C20	E01
All engines									4.9745

MX-5 II

				ENGINE
1.6 16V	Petrol	81	05/98-10/05	B6D

Engine	Information	A10	A20	A40	A50	A70	C10 - C30	C20	E01
All engines									4.9745

				ENGINE
1.8	Petrol	103	01/98-07/02	BPD

Engine	Information	A10	A20	A40	A50	A70	C10 - C30	C20	E01
All engines									4.9745

				ENGINE
1.8	Petrol	107	08/02-10/05	BP6J

Engine	Information	A10	A20	A40	A50	A70	C10 - C30	C20	E01
All engines									4.9745

A10	CONDENSER	A20	CONTACT SET	A40	DISTRIBUTOR CAP	A50	ROTOR	A70	PICK-UP
C10	COIL	C20	IGNITION MODULE	C30	ELECTRONIC IGNITION KIT	E01	IGNITION CABLE SET		

The present application list is a brief version. For the detailed information about the possibility of installation on a specific vehicle, please refer to our web-catalogue http://catalogo.facet.eu/

Vehicle	alim.	kW	Date	Engine	FUNCTIONS ON THE VEHICLE							
					A10	A20	A40	A50	A70	C10 - C30	C20	E01
1.8 16V	Petrol	102	11/00-10/05	BPD								4.9745
1.8 16V	Petrol	103	05/98-10/05	BP-ZE								4.9745
1.8 16V	Petrol	107	11/00-10/05	BPD, BP-ZE								4.9745
MX-5 IV												
1.5	Petrol	96	06/15->	P5-VPR, P5Z1						9.6527 C10		
1.5	Petrol	97	05/18->	P5X1						9.6527 C10		
2.0	Petrol	118	06/15->	PEX4, PEX6						9.6527 C10		
2.0	Petrol	135	05/18->	PEXF						9.6527 C10		
MX-6												
2.0	Petrol	85	02/92-02/97	FS								
2.5 24V	Petrol	121	02/92-09/97	KL								
2.5 24V	Petrol	123	02/93-11/95	KL								
2.5 i 24V	Petrol	120	08/94-02/97	KL								
NAVAJO												
4.0i [USA]	Petrol	0	01/91->	--						9.6189 C10		

Engine	Information	A10	A20	A40	A50	A70	C10 - C30	C20	E01
All engines									
All engines									
All engines									
All engines	x 4, COIL ON PLUG								
All engines	x 4, COIL ON PLUG								
All engines	x 4, COIL ON PLUG								
All engines	x 4, COIL ON PLUG								
All engines	->year 30/04/94, version Hitachi			2.7977	3.7994				
All engines	01/05/94 ->, version Hitachi			2.7992	3.8002				
All engines	01/05/94 ->, version Mitsubishi				3.8331/32				
All engines									4.8884
All engines	->year 30/04/94, version Mitsubishi			2.8322/37	3.8331/33				
All engines	01/05/94 ->, version Mitsubishi			2.8322/49	3.8331/34				
All engines	->ch. 498325								4.9760
All engines	->year 30/04/94, version Mitsubishi			2.8322/37	3.8331/33				
All engines	01/05/94 ->, version Mitsubishi			2.8322/49	3.8331/34				
All engines	->ch. 498325								4.9760
All engines	version Mitsubishi			2.8322/49	3.8331/34				
All engines	->ch. 498325								4.9760
All engines									

A10	CONDENSER	A20	CONTACT SET	A40	DISTRIBUTOR CAP	A50	ROTOR	A70	PICK-UP
C10	COIL	C20	IGNITION MODULE	C30	ELECTRONIC IGNITION KIT	E01	IGNITION CABLE SET		

The present application list is a brief version. For the detailed information about the possibility of installation on a specific vehicle, please refer to our web-catalogue http://catalogo.facet.eu/

Vehicle	alim.	kW	Date	Engine	FUNCTIONS ON THE VEHICLE: A10	A20	A40	A50	A70	C10 - C30	C20	E01

PREMACY

				ENGINE
1.9	Petrol	74	07/99-03/05	FP

Engine	Information	A10	A20	A40	A50	A70	C10 - C30	C20	E01
All engines									4.9767

				ENGINE
1.9	Petrol	84	07/99-03/05	FP

Engine	Information	A10	A20	A40	A50	A70	C10 - C30	C20	E01
All engines									4.9767

PROTEGE

				ENGINE
1.6i [USA]	Petrol	0	06/98->	--

Engine	Information	A10	A20	A40	A50	A70	C10 - C30	C20	E01
All engines									4.9729

				ENGINE
1.8i [USA]	Petrol	0	06/98->	--

Engine	Information	A10	A20	A40	A50	A70	C10 - C30	C20	E01
All engines									4.9740

				ENGINE
1.8i DOHC [USA]	Petrol	0	01/90->	--

Engine	Information	A10	A20	A40	A50	A70	C10 - C30	C20	E01
All engines	version Mitsubishi			2.8322/21					
All engines							9.6133 C10		

				ENGINE
1.8i OHC [USA]	Petrol	0	01/90->	--

Engine	Information	A10	A20	A40	A50	A70	C10 - C30	C20	E01
All engines	version Mitsubishi			2.8322/21					
All engines							9.6133 C10		4.9398

TRIBUTE

				ENGINE
2.0	Petrol	91	03/00-05/08	0L65(396CUV8)

Engine	Information	A10	A20	A40	A50	A70	C10 - C30	C20	E01
All engines	x 1, D.I.S.						9.6432 C10		

				ENGINE
2.0 4WD	Petrol	91	03/00-05/08	1L33(425CUV8)

Engine	Information	A10	A20	A40	A50	A70	C10 - C30	C20	E01
All engines	x 1, D.I.S.						9.6432 C10		

				ENGINE
2.0i [USA]	Petrol	91	05/00->	B

Engine	Information	A10	A20	A40	A50	A70	C10 - C30	C20	E01
All engines							9.6432 C10		

				ENGINE
2.0i 4x4 [USA]	Petrol	91	05/00->	B

Engine	Information	A10	A20	A40	A50	A70	C10 - C30	C20	E01
All engines							9.6432 C10		

				ENGINE
2.3 AWD	Petrol	110	04/04-05/08	L3-VE

Engine	Information	A10	A20	A40	A50	A70	C10 - C30	C20	E01
All engines	x 4, COIL ON PLUG						9.6380 C10		

				ENGINE
2.3 GX	Petrol	110	12/03-10/04	L3-VE

Engine	Information	A10	A20	A40	A50	A70	C10 - C30	C20	E01
All engines	x 4, COIL ON PLUG						9.6380 C10		

XEDOS 6

				ENGINE
1.6 16V	Petrol	79	04/94-10/99	B6 (DOHC)

Engine	Information	A10	A20	A40	A50	A70	C10 - C30	C20	E01
All engines	->eng. 210758								4.9231

A10	CONDENSER	A20	CONTACT SET	A40	DISTRIBUTOR CAP	A50	ROTOR	A70	PICK-UP
C10	COIL	C20	IGNITION MODULE	C30	ELECTRONIC IGNITION KIT	E01	IGNITION CABLE SET		

The present application list is a brief version. For the detailed information about the possibility of installation on a specific vehicle, please refer to our web-catalogue http://catalogo.facet.eu/

Vehicle	alim.	kW	Date	Engine	FUNCTIONS ON THE VEHICLE							
					A10	A20	A40	A50	A70	C10 - C30	C20	E01
1.6 16V	Petrol	**83**	01/92-03/94	ENGINE **B69**								
Engine: All engines	Information:											4.9231
2.0 V6	Petrol	**103**	06/94-10/99	ENGINE **KF1**								
Engine: All engines	Information:											4.9760
2.0 V6	Petrol	**106**	01/92-05/94	ENGINE **KF1**								
Engine: All engines	Information:											4.9760
XEDOS 9												
2.0	Petrol	**118**	08/98-08/00	ENGINE **KF**								
Engine: All engines	Information: version Mitsubishi						2.8322/49	3.8331/34				
Engine: All engines	Information: no specific info conc. application available											4.9760
2.0 24V	Petrol	**105**	08/93-01/00	ENGINE **KF**								
Engine: All engines	Information: version Mitsubishi						2.8322/49	3.8331/34				
Engine: All engines	Information: no specific info conc. application available											4.9760
2.5 24V	Petrol	**123**	07/93-07/00	ENGINE **KL**								
Engine: All engines	Information: version Mitsubishi						2.8322/49	3.8331/34				
Engine: All engines	Information: no specific info conc. application available											4.9760
2.5 V6	Petrol	**120**	07/00-09/02	ENGINE **KL**								
Engine: All engines	Information: version Mitsubishi						2.8322/49	3.8331/34				

A10	CONDENSER	**A20**	CONTACT SET	**A40**	DISTRIBUTOR CAP	**A50**	ROTOR	**A70**	PICK-UP
C10	COIL	**C20**	IGNITION MODULE	**C30**	ELECTRONIC IGNITION KIT	**E01**	IGNITION CABLE SET		

The present application list is a brief version. For the detailed information about the possibility of installation on a specific vehicle, please refer to our web-catalogue http://catalogo.facet.eu/

Vehicle	alim.	kW	Date	Engine	FUNCTIONS ON THE VEHICLE							
					A10	A20	A40	A50	A70	C10 - C30	C20	E01
/8												
				ENGINE								
200	Petrol	70	01/68-01/77	M 115.923, M 115.926								
Engine: All engines — Information:								3.7521RS				
				ENGINE								
230.6	Petrol	88	01/68-11/76	M 180.954								
Engine: All engines — Information:						1.2529HDV		3.7518RS				
				ENGINE								
250	Petrol	85	01/68-08/72	M 114.920								
Engine: All engines — Information:						1.2529HDV		3.7518RS				
				ENGINE								
250	Petrol	96	07/68-08/72	M 114.920								
Engine: All engines — Information:						1.2529HDV		3.7518RS				
				ENGINE								
250 2.8	Petrol	96	06/72-11/76	M 130.923								
Engine: All engines — Information:								3.7518RS				
				ENGINE								
250 C	Petrol	96	04/69-06/72	M 114.920								
Engine: All engines — Information:						1.2529HDV		3.7518RS				
				ENGINE								
250 C 2.8	Petrol	96	06/72-11/76	M 130.923								
Engine: All engines — Information:								3.7518RS				
				ENGINE								
250 CE	Petrol	110	04/69-04/72	M 114.980								
Engine: All engines — Information:						1.2529HDV						
				ENGINE								
280	Petrol	118	06/72-11/76	M 110.921								
Engine: All engines — Information:						1.2529HDV, 1.2562						
				ENGINE								
280 C	Petrol	118	06/72-02/77	M 110.921								
Engine: All engines — Information:						1.2529HDV, 1.2562						
				ENGINE								
280 CE	Petrol	136	06/72-01/77	M 110.981								
Engine: All engines — Information:						1.2562						
				ENGINE								
280 E	Petrol	136	06/72-11/76	M 110.981								
Engine: All engines — Information:						1.2562						
123												
				ENGINE								
280 CE	Petrol	136	03/77-11/85	M 110.988								
Engine: All engines — Information:												
All engines — version Bosch							2.7523PHT	3.7560RS				
All engines —												4.9323
124												
				ENGINE								
200 CE	Petrol	90	09/89-06/93	M 102.963								
Engine: All engines — Information:												
-catalytic converter, version Bosch							2.7508PHT	3.7555RS				

A10	CONDENSER	**A20**	CONTACT SET	**A40**	DISTRIBUTOR CAP	**A50**	ROTOR	**A70**	PICK-UP
C10	COIL	**C20**	IGNITION MODULE	**C30**	ELECTRONIC IGNITION KIT	**E01**	IGNITION CABLE SET		

The present application list is a brief version. For the detailed information about the possibility of installation on a specific vehicle, please refer to our web-catalogue http://catalogo.facet.eu/

Vehicle	alim.	kW	Date	Engine	FUNCTIONS ON THE VEHICLE A10	A20	A40	A50	A70	C10 - C30		C20	E01
124													
200 CE	Petrol	90	09/89-06/93	ENGINE M 102.963									
All engines	+catalytic converter, version Bosch						2.7530/4PHT	3.7573/21RS					
All engines	+catalytic converter									9.6078	C10		
All engines	-catalytic converter									9.6080	C10		
All engines													4.9654
220 CE	Petrol	110	10/92-05/93	ENGINE M 111.960									
All engines	Qty: 2									9.6217	C10		
230 CE	Petrol	100	03/87-12/92	ENGINE M 102.982									
All engines	-catalytic converter, version Bosch						2.7508PHT	3.7555RS					
All engines	+catalytic converter, version Bosch						2.7530/4PHT	3.7573/21RS					
All engines	+catalytic converter									9.6078	C10		
All engines	-catalytic converter									9.6080	C10		
All engines													4.9654
230 CE	Petrol	97	03/87-12/92	ENGINE M 102.982									
All engines	-catalytic converter, version Bosch						2.7508PHT	3.7555RS					
All engines	+catalytic converter, version Bosch						2.7530/4PHT	3.7573/21RS					
All engines	+catalytic converter									9.6078	C10		
All engines	-catalytic converter									9.6080	C10		
All engines													4.9654
230 CE Cat	Petrol	97	06/89-12/92	ENGINE M 102.982									
All engines	-catalytic converter, version Bosch						2.7508PHT	3.7555RS					
All engines	+catalytic converter, version Bosch						2.7530/4PHT	3.7573/21RS					
All engines	+catalytic converter									9.6078	C10		
All engines	-catalytic converter									9.6080	C10		
All engines													4.9654
300 CE	Petrol	132	03/87-05/93	ENGINE M 103.983									
All engines	version Bosch						2.7530/7PHT	3.7573/25RS					
All engines										9.6078	C10		4.9657
300 CE	Petrol	138	03/87-12/89	ENGINE M 103.983									
All engines	version Bosch						2.7530/7PHT	3.7573/25RS					
All engines										9.6078	C10		
300 CE-24	Petrol	162	09/89-06/93	ENGINE M 104.980									
All engines										9.6079	C10		
300 CE-24	Petrol	170	09/89-06/93	ENGINE M 104.980									
All engines										9.6079	C10		
320 CE	Petrol	162	10/92-05/93	ENGINE M 104.992									
All engines	Qty: 3, without spark plug connector									9.6216	C10		
All engines	incl. spark plug connector, Qty: 3									9.6216K	C10		

A10	CONDENSER	**A20**	CONTACT SET	**A40**	DISTRIBUTOR CAP	**A50**	ROTOR	**A70**	PICK-UP
C10	COIL	**C20**	IGNITION MODULE	**C30**	ELECTRONIC IGNITION KIT	**E01**	IGNITION CABLE SET		

The present application list is a brief version. For the detailed information about the possibility of installation on a specific vehicle, please refer to our web-catalogue http://catalogo.facet.eu/

Vehicle	alim.	kW	Date	Engine	FUNCTIONS ON THE VEHICLE							
					A10	A20	A40	A50	A70	C10 - C30	C20	E01
190												
				ENGINE								
2.0	Petrol	**66**	10/82-10/84	**M 102.921**								
All engines	version Bosch						2.7508PHT	3.7555RS				
All engines										9.6080 C10		
				ENGINE								
2.0	Petrol	**75**	01/86-05/90	**M 102.924**								
All engines	version Bosch						2.7508PHT					
All engines	-catalytic converter, version Bosch							3.7555RS				
All engines	+catalytic converter, version Bosch							3.7573/21RS				
All engines	+catalytic converter									9.6078 C10		
All engines	-catalytic converter									9.6080 C10		
All engines												4.9654
				ENGINE								
2.0	Petrol	**77**	08/83-05/90	**M 102.924**								
All engines	version Bosch						2.7508PHT					
All engines	-catalytic converter, version Bosch							3.7555RS				
All engines	+catalytic converter, version Bosch							3.7573/21RS				
All engines	+catalytic converter									9.6078 C10		
All engines	-catalytic converter									9.6080 C10		
All engines												4.9654
				ENGINE								
2.3	Petrol	**97**	09/87-09/88	**M 102.985**								
All engines	-catalytic converter, version Bosch						2.7508PHT	3.7555RS				
All engines	+catalytic converter, version Bosch						2.7530/4PHT	3.7573/21RS				
All engines	+catalytic converter									9.6078 C10		
All engines	-catalytic converter									9.6080 C10		
All engines												4.9300
				ENGINE								
2.3 E	Petrol	**100**	10/82-09/88	**M 102.985**								
All engines	-catalytic converter, version Bosch						2.7508PHT	3.7555RS				
All engines	+catalytic converter, version Bosch						2.7530/4PHT	3.7573/21RS				
All engines	+catalytic converter									9.6078 C10		
All engines	-catalytic converter									9.6080 C10		
All engines												4.9300
				ENGINE								
2.6	Petrol	**118**	10/82-09/88	**M 103.942**								
All engines	version Bosch						2.7530/7PHT	3.7573/25RS				
All engines										9.6078 C10		
				ENGINE								
E 1.8	Petrol	**77**	01/92-12/93	**M 102.919**								
All engines	version Bosch						2.7530/4PHT	3.7573/21RS				
All engines										9.6078 C10		4.9300
				ENGINE								
E 1.8	Petrol	**80**	04/90-08/93	**M 102.910**								
All engines	version Bosch						2.7530/4PHT	3.7573/21RS				
All engines										9.6078 C10		4.9300
				ENGINE								
E 2.0	Petrol	**83**	02/85-12/86	**M 102.962**								
All engines	-catalytic converter, version Bosch						2.7508PHT	3.7555RS				
All engines	+catalytic converter, version Bosch						2.7530/4PHT	3.7573/21RS				
All engines	+catalytic converter									9.6078 C10		
All engines	-catalytic converter									9.6080 C10		

A10	CONDENSER	**A20**	CONTACT SET	**A40**	DISTRIBUTOR CAP	**A50**	ROTOR	**A70**	PICK-UP
C10	COIL	**C20**	IGNITION MODULE	**C30**	ELECTRONIC IGNITION KIT	**E01**	IGNITION CABLE SET		

The present application list is a brief version. For the detailed information about the possibility of installation on a specific vehicle, please refer to our web-catalogue http://catalogo.facet.eu/

Vehicle	alim.	kW	Date	Engine	FUNCTIONS ON THE VEHICLE							
					A10	A20	A40	A50	A70	C10 - C30	C20	E01
E 2.0	Petrol	**83**	02/85-12/86	**M 102.962**								

Engine	Information	A10	A20	A40	A50	A70	C10 - C30		C20	E01
All engines	01/01/90 ->									4.9300

Vehicle	alim.	kW	Date	Engine
E 2.0	Petrol	**85**	02/85-12/86	**M 102.962**

Engine	Information	A10	A20	A40	A50	A70	C10 - C30		C20	E01
All engines	-catalytic converter, version Bosch			2.7508PHT	3.7555RS					
All engines	+catalytic converter, version Bosch			2.7530/4PHT	3.7573/21RS					
All engines	+catalytic converter						9.6078	C10		
All engines	-catalytic converter						9.6080	C10		
All engines	01/01/90 ->									4.9300

Vehicle	alim.	kW	Date	Engine
E 2.0	Petrol	**87**	01/85-08/93	**M 102.962**

Engine	Information	A10	A20	A40	A50	A70	C10 - C30		C20	E01
All engines	-catalytic converter, version Bosch			2.7508PHT	3.7555RS					
All engines	+catalytic converter, version Bosch			2.7530/4PHT	3.7573/21RS					
All engines	+catalytic converter						9.6078	C10		
All engines	-catalytic converter						9.6080	C10		
All engines	01/01/90 ->									4.9300

Vehicle	alim.	kW	Date	Engine
E 2.0	Petrol	**90**	10/82-06/93	**M 102.962**

Engine	Information	A10	A20	A40	A50	A70	C10 - C30		C20	E01
All engines	-catalytic converter, version Bosch			2.7508PHT	3.7555RS					
All engines	+catalytic converter, version Bosch			2.7530/4PHT	3.7573/21RS					
All engines	+catalytic converter						9.6078	C10		
All engines	-catalytic converter						9.6080	C10		
All engines	01/01/90 ->									4.9300

Vehicle	alim.	kW	Date	Engine
E 2.3	Petrol	**100**	10/86-08/93	**M 102.985**

Engine	Information	A10	A20	A40	A50	A70	C10 - C30		C20	E01
All engines	-catalytic converter, version Bosch			2.7508PHT	3.7555RS					
All engines	+catalytic converter, version Bosch			2.7530/4PHT	3.7573/21RS					
All engines	+catalytic converter						9.6078	C10		
All engines	-catalytic converter						9.6080	C10		
All engines										4.9300

Vehicle	alim.	kW	Date	Engine
E 2.3	Petrol	**97**	09/86-08/91	**M 102.985**

Engine	Information	A10	A20	A40	A50	A70	C10 - C30		C20	E01
All engines	-catalytic converter, version Bosch			2.7508PHT	3.7555RS					
All engines	+catalytic converter, version Bosch			2.7530/4PHT	3.7573/21RS					
All engines	+catalytic converter						9.6078	C10		
All engines	-catalytic converter						9.6080	C10		
All engines										4.9300

Vehicle	alim.	kW	Date	Engine
E 2.3-16	Petrol	**125**	09/85-12/87	**M 102.983**

Engine	Information	A10	A20	A40	A50	A70	C10 - C30		C20	E01
All engines	version Bosch			2.7530/4PHT	3.7573/21RS					
All engines							9.6078	C10		

Vehicle	alim.	kW	Date	Engine
E 2.3-16	Petrol	**130**	09/85-08/88	**M 102.983**

Engine	Information	A10	A20	A40	A50	A70	C10 - C30		C20	E01
All engines	version Bosch			2.7530/4PHT	3.7573/21RS					
All engines							9.6078	C10		

Vehicle	alim.	kW	Date	Engine
E 2.3-16	Petrol	**136**	04/84-01/87	**M 102.983**

Engine	Information	A10	A20	A40	A50	A70	C10 - C30		C20	E01
All engines	version Bosch			2.7530/4PHT	3.7573/21RS					
All engines							9.6078	C10		

A10	CONDENSER	**A20**	CONTACT SET	**A40**	DISTRIBUTOR CAP	**A50**	ROTOR	**A70**	PICK-UP
C10	COIL	**C20**	IGNITION MODULE	**C30**	ELECTRONIC IGNITION KIT	**E01**	IGNITION CABLE SET		

The present application list is a brief version. For the detailed information about the possibility of installation on a specific vehicle, please refer to our web-catalogue http://catalogo.facet.eu/

Vehicle	alim.	kW	Date	Engine	FUNCTIONS ON THE VEHICLE: A10	A20	A40	A50	A70	C10 - C30	C20	E01
E 2.5-16	Petrol	150	09/88-08/93	**M 102.990**								
All engines	version Bosch						2.7530/4PHT	3.7573/21RS				
All engines										9.6078 C10		
E 2.5-16 Evolution	Petrol	143	03/89-08/93	**M 102.991**								
All engines	version Bosch						2.7530/4PHT	3.7573/21RS				
All engines										9.6078 C10		
E 2.5-16 Evolution II	Petrol	173	05/90-08/93	**M 102.992**								
All engines	version Bosch						2.7530/4PHT					
All engines										9.6078 C10		
E 2.6	Petrol	118	09/86-08/93	**M 103.942**								
All engines	version Bosch						2.7530/7PHT	3.7573/25RS				
All engines										9.6078 C10		
E 2.6	Petrol	122	09/86-12/89	**M 103.942**								
All engines	version Bosch						2.7530/7PHT	3.7573/25RS				
All engines										9.6078 C10		
E 3.2 AMG	Petrol	132	01/88->	**M 103.983**								
All engines	version Bosch						2.7530/7PHT	3.7573/25RS				
All engines										9.6078 C10		
CITAN												
112	Petrol	84	06/13-08/21	**M 200.711**								
All engines	x 4, COIL ON PLUG									9.6513 C10		
CLASSE A II												
A 150	Petrol	70	09/04-06/12	**M 266.920**								
All engines	x 2, COIL ON PLUG									9.6317 C10		
All engines												4.7234
A 160	Petrol	70	04/09-06/12	**M 266.920**								
All engines	x 2, COIL ON PLUG									9.6317 C10		
All engines												4.7234
A 170	Petrol	85	09/04-06/12	**M 266.940**								
All engines	x 2, COIL ON PLUG									9.6317 C10		
All engines												4.7234
A 180	Petrol	85	04/09-06/12	**M 266.940**								
All engines	x 2, COIL ON PLUG									9.6317 C10		
All engines												4.7234
A 200	Petrol	100	09/04-06/12	**M 266.960**								
All engines	x 2, COIL ON PLUG									9.6317 C10		
All engines												4.7234

A10	CONDENSER	**A20**	CONTACT SET	**A40**	DISTRIBUTOR CAP	**A50**	ROTOR	**A70**	PICK-UP
C10	COIL	**C20**	IGNITION MODULE	**C30**	ELECTRONIC IGNITION KIT	**E01**	IGNITION CABLE SET		

The present application list is a brief version. For the detailed information about the possibility of installation on a specific vehicle, please refer to our web-catalogue http://catalogo.facet.eu/

Vehicle	alim.	kW	Date	Engine	FUNCTIONS ON THE VEHICLE A10	A20	A40	A50	A70	C10 - C30	C20	E01
A 200 TURBO	Petrol	142	09/05-06/12	**M 266.980**								
All engines				x 2, COIL ON PLUG						9.6317 C10		
All engines												4.7232
A 160	Petrol	75	07/15-05/18	**M 270.910**								
All engines				x 4, without protection hose, COIL ON PLUG, FOR: (TJ)						9.6526 C10		
A 180	Petrol	90	09/12-05/18	**M 270.910**								
All engines				x 4, without protection hose, COIL ON PLUG, FOR: (TJ)						9.6526 C10		
A 200	Petrol	115	06/12-05/18	**M 270.910**								
All engines				x 4, without protection hose, COIL ON PLUG, FOR: (TJ)						9.6526 C10		
A 220 4-matic	Petrol	135	05/14-05/18	**M 270.920**								
All engines				x 4, version 1, without protection hose, COIL ON PLUG, DELPHI, FOR: (TJ), without protection hose, COIL ON PLUG						9.6526 C10		
A 250	Petrol	155	06/12-05/18	**M 270.920**								
All engines				x 4, version 1, without protection hose, COIL ON PLUG, DELPHI, FOR: (TJ), without protection hose, COIL ON PLUG						9.6526 C10		
A 250	Petrol	160	07/15-05/18	**M 270.920**								
All engines				x 4, version 1, without protection hose, COIL ON PLUG, DELPHI, FOR: (TJ), without protection hose, COIL ON PLUG						9.6526 C10		
A 250 4-matic	Petrol	155	06/13-05/18	**M 270.920**								
All engines				x 4, version 1, without protection hose, COIL ON PLUG, DELPHI, FOR: (TJ), without protection hose, COIL ON PLUG						9.6526 C10		
A 250 4-matic	Petrol	160	07/15-05/18	**M 270.920**								
All engines				x 4, version 1, without protection hose, COIL ON PLUG, DELPHI, FOR: (TJ), without protection hose, COIL ON PLUG						9.6526 C10		
A 45 AMG 4-matic	Petrol	265	06/13-05/18	**M 133.980**								
All engines				x 4, DELPHI, without protection hose, COIL ON PLUG						9.6526 C10		
AMG A 45 4-matic	Petrol	280	07/15-05/18	**M 133.980**								
All engines				x 4, DELPHI, without protection hose, COIL ON PLUG						9.6526 C10		
B 150	Petrol	70	03/05-11/11	**M 266.920**								
All engines				x 2, COIL ON PLUG						9.6317 C10		
All engines												4.7234
B 160	Petrol	70	04/09-11/11	**M 266.920**								
All engines				x 2, COIL ON PLUG						9.6317 C10		
All engines												4.7234

A10	CONDENSER	**A20**	CONTACT SET	**A40**	DISTRIBUTOR CAP	**A50**	ROTOR	**A70**	PICK-UP
C10	COIL	**C20**	IGNITION MODULE	**C30**	ELECTRONIC IGNITION KIT	**E01**	IGNITION CABLE SET		

The present application list is a brief version. For the detailed information about the possibility of installation on a specific vehicle, please refer to our web-catalogue http://catalogo.facet.eu/

Vehicle	alim.	kW	Date	Engine	FUNCTIONS ON THE VEHICLE: A10	A20	A40	A50	A70	C10 - C30	C20	E01
B 170	Petrol	85	03/05-11/11	**M 266.940**								
Engine	Information											
All engines	x 2, COIL ON PLUG									9.6317 C10		
All engines												4.7234
B 170 NGT	Petrol/ Compressed Natural Gas (CNG)	85	04/08-11/11	**M 266.960, M 266960NGT**								
Engine	Information											
Eng. M 266.960	Qty: 2									9.6317 C10		
Eng. M 266960NGT	x 2, COIL ON PLUG									9.6317 C10		
Eng. M 266.960												4.7234
B 180	Petrol	85	04/09-11/11	**M 266.940**								
Engine	Information											
All engines	x 2, COIL ON PLUG									9.6317 C10		
All engines												4.7234
B 180 NGT	Petrol/ Compressed Natural Gas (CNG)	85	04/08-11/11	**M 266.960, M 266960NGT**								
Engine	Information											
Eng. M 266.960	Qty: 2									9.6317 C10		
Eng. M 266960NGT	x 2, COIL ON PLUG									9.6317 C10		
Eng. M 266.960												4.7234
B 200	Petrol	100	03/05-11/11	**M 266.960**								
Engine	Information											
All engines	x 2, COIL ON PLUG									9.6317 C10		
All engines												4.7234
B 200 TURBO	Petrol	142	03/05-11/11	**M 266.980**								
Engine	Information											
All engines	x 2, COIL ON PLUG									9.6317 C10		
All engines												4.7232
CLASSE B II												
B 160	Petrol	75	07/15-12/18	**M 270.910**								
Engine	Information											
All engines	SA A701, MADE BY: (TJ), x 4, without protection hose, COIL ON PLUG, FOR: (TJ)									9.6526 C10		
B 180	Petrol	90	11/11-12/18	**M 270.910**								
Engine	Information											
All engines	MADE BY: (TJ), x 4, without protection hose, COIL ON PLUG, FOR: (TJ)									9.6526 C10		
B 200	Petrol	115	11/11-12/18	**M 270.910**								
Engine	Information											
All engines	MADE BY: (TJ), x 4, without protection hose, COIL ON PLUG, FOR: (TJ)									9.6526 C10		
B 200 Natural Gas Drive / B 200 c	Petrol/ Compressed Natural Gas (CNG)	115	11/12-12/17	**M 270.920, M 270920NGT**								
Engine	Information											
Eng. M 270.920	-protective sheath, Qty: 4									9.6526 C10		
Eng. M 270920NGT	x 4, DELPHI, without protection hose, COIL ON PLUG									9.6526 C10		

A10	CONDENSER	**A20**	CONTACT SET	**A40**	DISTRIBUTOR CAP	**A50**	ROTOR	**A70**	PICK-UP
C10	COIL	**C20**	IGNITION MODULE	**C30**	ELECTRONIC IGNITION KIT	**E01**	IGNITION CABLE SET		

The present application list is a brief version. For the detailed information about the possibility of installation on a specific vehicle, please refer to our web-catalogue http://catalogo.facet.eu/

Vehicle	alim.	kW	Date	Engine	FUNCTIONS ON THE VEHICLE A10	A20	A40	A50	A70	C10 - C30	C20	E01
B 220 4-matic	Petrol	135	05/13-12/18	**M 270.920**								
All engines	MADE BY: (TJ), x 4, DELPHI, x 4, without protection hose, COIL ON PLUG, FOR: (TJ)									9.6526 C10		
B 250	Petrol	155	05/12-12/18	**M 270.920**								
All engines	x 4, DELPHI, without protection hose, COIL ON PLUG									9.6526 C10		
B 250 4-matic	Petrol	155	08/14-12/18	**M 270.920**								
All engines	x 4, DELPHI, without protection hose, COIL ON PLUG									9.6526 C10		
CLASSE C I												
C 180	Petrol	89	11/94-05/00	**M 111.921**								
All engines	Qty: 2, without spark plug connector									9.6216 C10		
All engines	incl. spark plug connector, Qty: 2									9.6216K C10		
C 180	Petrol	90	03/93-05/00	**M 111.920, M 111.921**								
Eng. M 111.921	Qty: 2, without spark plug connector									9.6216 C10		
Eng. M 111.921	incl. spark plug connector, Qty: 2									9.6216K C10		
Eng. M 111.920	Qty: 2									9.6217 C10		
Eng. M 111.920												4.9305
C 180 T	Petrol	90	06/96-09/00	**M 111.920, M 111.921**								
Eng. M 111.921	Qty: 2, without spark plug connector									9.6216 C10		
Eng. M 111.921	incl. spark plug connector, Qty: 2									9.6216K C10		
Eng. M 111.920	Qty: 2									9.6217 C10		
Eng. M 111.920												4.9305
C 200	Petrol	100	01/94-05/00	**M 111.941, M 111.945**								
Eng. M 111.945	Qty: 2, without spark plug connector									9.6216 C10		
Eng. M 111.945	incl. spark plug connector, Qty: 2									9.6216K C10		
Eng. M 111.941	Qty: 2									9.6217 C10		
Eng. M 111.941												4.9305
C 200 Kompressor	Petrol	132	10/95-05/00	**M 111.944**								
All engines	Qty: 2, without spark plug connector									9.6216 C10		
All engines	incl. spark plug connector, Qty: 2									9.6216K C10		
C 200 Kompressor	Petrol	141	11/96-05/00	**M 111.944**								
All engines	Qty: 2, without spark plug connector									9.6216 C10		
All engines	incl. spark plug connector, Qty: 2									9.6216K C10		
C 200 T	Petrol	100	06/96-03/01	**M 111.941, M 111.945**								
Eng. M 111.945	Qty: 2, without spark plug connector									9.6216 C10		
Eng. M 111.945	incl. spark plug connector, Qty: 2									9.6216K C10		
Eng. M 111.941	Qty: 2									9.6217 C10		
Eng. M 111.941												4.9305
C 200 T Kompressor	Petrol	141	11/96-03/01	**M 111.944**								
All engines	Qty: 2, without spark plug connector									9.6216 C10		
All engines	incl. spark plug connector, Qty: 2									9.6216K C10		

A10	CONDENSER	**A20**	CONTACT SET	**A40**	DISTRIBUTOR CAP	**A50**	ROTOR	**A70**	PICK-UP
C10	COIL	**C20**	IGNITION MODULE	**C30**	ELECTRONIC IGNITION KIT	**E01**	IGNITION CABLE SET		

The present application list is a brief version. For the detailed information about the possibility of installation on a specific vehicle, please refer to our web-catalogue http://catalogo.facet.eu/

Vehicle	alim.	kW	Date	Engine	FUNCTIONS ON THE VEHICLE							
					A10	A20	A40	A50	A70	C10 - C30	C20	E01
C 220	Petrol	110	03/93-05/00	**M 111.961**						9.6217 C10		
C 230	Petrol	110	06/96-06/97	**M 111.974**						9.6216 C10 9.6216K C10		
C 230 Kompressor	Petrol	142	10/95-05/00	**M 111.975**						9.6216 C10 9.6216K C10		
C 230 T	Petrol	110	06/96-06/98	**M 111.974**						9.6216 C10 9.6216K C10		
C 230 T Kompressor	Petrol	142	06/97-09/00	**M 111.975**						9.6216 C10 9.6216K C10		
C 240	Petrol	125	06/97-05/00	**M 112.910**						9.6317 C10		4.9649
C 240 T	Petrol	125	06/97-03/01	**M 112.910, M 112.915**						9.6317 C10		4.9649
C 280	Petrol	142	05/93-05/00	**M 104.941**						9.6216 C10 9.6216K C10		
C 280	Petrol	145	06/97-05/00	**M 112.920**						9.6317 C10		4.9649
C 280 T	Petrol	145	06/97-03/01	**M 112.920**						9.6317 C10		4.9649
C 36 AMG	Petrol	206	05/94-05/00	**M 104.941 (AMG 3.6)**						9.6216 C10 9.6216K C10		
C 43 AMG	Petrol	225	08/97-03/01	**M 113.944**						9.6317 C10		

Engine	Information
All engines	Qty: 2
All engines	Qty: 2, without spark plug connector
All engines	incl. spark plug connector, Qty: 2
All engines	Qty: 6
All engines	
All engines	Qty: 3, without spark plug connector
All engines	incl. spark plug connector, Qty: 3
All engines	Qty: 8

A10	CONDENSER	**A20**	CONTACT SET	**A40**	DISTRIBUTOR CAP	**A50**	ROTOR	**A70**	PICK-UP
C10	COIL	**C20**	IGNITION MODULE	**C30**	ELECTRONIC IGNITION KIT	**E01**	IGNITION CABLE SET		

The present application list is a brief version. For the detailed information about the possibility of installation on a specific vehicle, please refer to our web-catalogue http://catalogo.facet.eu/

Vehicle	alim.	kW	Date	Engine	FUNCTIONS ON THE VEHICLE A10	A20	A40	A50	A70	C10 - C30	C20	E01

CLASSE C II

Vehicle	alim.	kW	Date	Engine
C 160 Kompressor	Petrol	90	05/02-05/08	**M 271.921**

Engine	Information	A10	A20	A40	A50	A70	C10 - C30		C20	E01
All engines	x 4, COIL ON PLUG						9.6320	C10		

Vehicle	alim.	kW	Date	Engine
C 180 Kompressor	Petrol	105	05/02-05/08	**M 271.946**

Engine	Information	A10	A20	A40	A50	A70	C10 - C30		C20	E01
All engines	->eng. 30853899 (+31019397), eng. type 30853900 (+30821903) ->, x 4, COIL ON PLUG, x 4, COIL ON PLUG						9.6320	C10		

Vehicle	alim.	kW	Date	Engine
C 200 CGI Kompressor	Petrol	125	03/03-05/08	**M 271.942**

Engine	Information	A10	A20	A40	A50	A70	C10 - C30		C20	E01
All engines	x 4, COIL ON PLUG						9.6320	C10		

Vehicle	alim.	kW	Date	Engine
C 200 Kompressor	Petrol	120	05/02-05/08	**M 271.940**

Engine	Information	A10	A20	A40	A50	A70	C10 - C30		C20	E01
All engines	x 4, COIL ON PLUG, x 4, COIL ON PLUG						9.6320	C10		

Vehicle	alim.	kW	Date	Engine
C 220	Petrol	120	05/02-05/08	**M 271.948**

Engine	Information	A10	A20	A40	A50	A70	C10 - C30		C20	E01
All engines	x 4, COIL ON PLUG						9.6320	C10		

Vehicle	alim.	kW	Date	Engine
C 230	Petrol	150	01/05-05/08	**M 272.920**

Engine	Information	A10	A20	A40	A50	A70	C10 - C30		C20	E01
All engines	x 6, COIL ON PLUG						9.6387	C10		

Vehicle	alim.	kW	Date	Engine
C 230 Kompressor	Petrol	141	05/02-05/08	**M 271.948**

Engine	Information	A10	A20	A40	A50	A70	C10 - C30		C20	E01
All engines	x 4, ->eng. 30853899, COIL ON PLUG, eng. type 30853900 ->, x 4, COIL ON PLUG, x 4, COIL ON PLUG						9.6320	C10		

Vehicle	alim.	kW	Date	Engine
C 240	Petrol	125	05/00-08/07	**M 112.912**

Engine	Information	A10	A20	A40	A50	A70	C10 - C30		C20	E01
All engines	x 6, COIL ON PLUG						9.6317	C10		
All engines										4.9649

Vehicle	alim.	kW	Date	Engine
C 240 4-matic	Petrol	125	07/02-08/07	**M 112.916**

Engine	Information	A10	A20	A40	A50	A70	C10 - C30		C20	E01
All engines	x 6, COIL ON PLUG						9.6317	C10		
All engines										4.9649

Vehicle	alim.	kW	Date	Engine
C 280	Petrol	170	01/05-08/07	**M 272.940**

Engine	Information	A10	A20	A40	A50	A70	C10 - C30		C20	E01
All engines	x 6, COIL ON PLUG						9.6387	C10		

Vehicle	alim.	kW	Date	Engine
C 280 4-matic	Petrol	170	01/05-08/07	**M 272.941**

Engine	Information	A10	A20	A40	A50	A70	C10 - C30		C20	E01
All engines	x 6, COIL ON PLUG						9.6387	C10		

Vehicle	alim.	kW	Date	Engine
C 32 AMG Kompressor	Petrol	260	02/01-08/07	**M 112.961**

Engine	Information	A10	A20	A40	A50	A70	C10 - C30		C20	E01
All engines	x 6, COIL ON PLUG						9.6317	C10		
All engines										4.9649

Vehicle	alim.	kW	Date	Engine
C 320	Petrol	160	05/00-05/08	**M 112.946**

Engine	Information	A10	A20	A40	A50	A70	C10 - C30		C20	E01
All engines	x 6, COIL ON PLUG						9.6317	C10		
All engines										4.9649

A10	CONDENSER	**A20**	CONTACT SET	**A40**	DISTRIBUTOR CAP	**A50**	ROTOR	**A70**	PICK-UP
C10	COIL	**C20**	IGNITION MODULE	**C30**	ELECTRONIC IGNITION KIT	**E01**	IGNITION CABLE SET		

The present application list is a brief version. For the detailed information about the possibility of installation on a specific vehicle, please refer to our web-catalogue http://catalogo.facet.eu/

Vehicle	alim.	kW	Date	Engine	FUNCTIONS ON THE VEHICLE A10	A20	A40	A50	A70	C10 - C30	C20	E01
C 320 4-matic	Petrol	160	07/02-08/07	**M 112.953**								
Engine: All engines	Information: x 6, COIL ON PLUG									9.6317 C10		
Engine: All engines	Information:											4.9649
C 350	Petrol	200	01/05-05/08	**M 272.960**								
Engine: All engines	Information: x 6, COIL ON PLUG									9.6387 C10		
C 350 4-matic	Petrol	200	01/05-08/07	**M 272.970**								
Engine: All engines	Information: x 6, COIL ON PLUG									9.6387 C10		
C 55 AMG	Petrol	270	02/04-08/07	**M 113.988**								
Engine: All engines	Information: x 8, COIL ON PLUG									9.6317 C10		
CLASSE C III												
C 180	Petrol	115	06/11->	**M 271.820, M 274.910**								
Engine: Eng. M 271.820	Information: x 4, COIL ON PLUG									9.6320 C10		
Engine: Eng. M 274.910	Information: MADE BY: (TJ), x 4, DELPHI, without protection hose, x 4, COIL ON PLUG, without protection hose, COIL ON PLUG, FOR: (TJ), FOR: (TJ)									9.6526 C10		
C 180 CGI	Petrol	115	01/07-08/14	**M 271.820, M 271.952, M 274.910**								
Engine: Eng. M 271.820, M 271.952	Information: x 4, COIL ON PLUG									9.6320 C10		
Engine: Eng. M 274.910	Information: MADE BY: (TJ), x 4, DELPHI, x 4, without protection hose, COIL ON PLUG, FOR: (TJ)									9.6526 C10		
C 180 Kompressor	Petrol	115	01/07-08/14	**M 271.820, M 271.910, M 271.952**								
Engine: All engines	Information: x 4, COIL ON PLUG									9.6320 C10		
C 200	Petrol	137	05/11-01/14	**M 271.820**								
Engine: All engines	Information: x 4, COIL ON PLUG									9.6320 C10		
C 200 CGI	Petrol	135	01/07->	**M 271.820, M 271.860, M 271.950**								
Engine: All engines	Information: x 4, COIL ON PLUG									9.6320 C10		
Engine: Eng. M 271.860	Information: Qty: 4									9.6320 C10		
C 200 Kompressor	Petrol	135	01/07-08/14	**M 271.820, M 271.860, M 271.950**								
Engine: All engines	Information: x 4, COIL ON PLUG									9.6320 C10		
C 230	Petrol	150	01/07-08/14	**M 272.921**								
Engine: All engines	Information: x 6, COIL ON PLUG									9.6387 C10		
C 230 4-matic	Petrol	150	07/07-01/14	**M 272.911**								
Engine: All engines	Information: x 6, COIL ON PLUG									9.6387 C10		
C 250	Petrol	150	01/07->	**M 271.860, M 272.921**								
Engine: Eng. M 271.860	Information: x 4, COIL ON PLUG									9.6320 C10		

A10	CONDENSER	**A20**	CONTACT SET	**A40**	DISTRIBUTOR CAP	**A50**	ROTOR	**A70**	PICK-UP
C10	COIL	**C20**	IGNITION MODULE	**C30**	ELECTRONIC IGNITION KIT	**E01**	IGNITION CABLE SET		

The present application list is a brief version. For the detailed information about the possibility of installation on a specific vehicle, please refer to our web-catalogue http://catalogo.facet.eu/

Vehicle	alim.	kW	Date	Engine	FUNCTIONS ON THE VEHICLE A10	A20	A40	A50	A70	C10 - C30	C20	E01
C 250	Petrol	150	01/07->	**M 271.860, M 272.921**								
Eng. M 272.921	Qty: 6									9.6387 C10		
Eng. M 272.921	x 6, COIL ON PLUG									9.6387 C10		
C 250 4-matic	Petrol	150	07/07->	**M 272.911**								
All engines	Qty: 6									9.6387 C10		
C 250 CGI	Petrol	150	07/09-08/14	**M 271.860**								
All engines	x 4, COIL ON PLUG									9.6320 C10		
C 280	Petrol	170	01/07-08/14	**M 272.947**								
All engines	x 6, COIL ON PLUG									9.6387 C10		
C 280 4-matic	Petrol	170	07/07-01/14	**M 272.948**								
All engines	x 6, COIL ON PLUG									9.6387 C10		
C 300	Petrol	170	08/07-08/14	**M 272.947**								
All engines	x 6, COIL ON PLUG									9.6387 C10		
C 300 4-matic	Petrol	170	07/07-01/14	**M 272.948**								
All engines	x 6, COIL ON PLUG									9.6387 C10		
C 350	Petrol	200	01/07-08/14	**M 272.961**								
All engines	x 6, COIL ON PLUG									9.6387 C10		
C 350 4-matic	Petrol	200	07/07-01/14	**M 272.971**								
All engines	x 6, COIL ON PLUG									9.6387 C10		
CLASSE C IV												
C 160	Petrol	95	04/15->	**M 274.910**								
All engines	SA A701, x 4, DELPHI, x 4, without protection hose, COIL ON PLUG, FOR: (TJ)									9.6526 C10		
C 180	Petrol	110	10/18->	**M 274.910**								
All engines	x 4, DELPHI, without protection hose, COIL ON PLUG, without protection hose, COIL ON PLUG, FOR: (TJ)									9.6526 C10		
C 180	Petrol	115	03/14->	**M 274.910**								
All engines	MADE BY: (TJ), SA A701, SA A701/784K, x 4, DELPHI, MADE BY: (TJ), x 4, without protection hose, x 4, COIL ON PLUG, without protection hose, COIL ON PLUG, FOR: (TJ), FOR: (TJ)									9.6526 C10		
C 200	Petrol	135	12/13-08/18	**M 274.920**								
All engines	MADE BY: (TJ), SA A701, x 4, DELPHI, MADE BY: (TJ), without protection hose, x 4, COIL ON PLUG, without protection hose, x 4, COIL ON PLUG, FOR: (TJ), without protection hose, COIL ON PLUG, FOR: (TJ), FOR: (TJ)									9.6526 C10		

A10	CONDENSER	**A20**	CONTACT SET	**A40**	DISTRIBUTOR CAP	**A50**	ROTOR	**A70**	PICK-UP
C10	COIL	**C20**	IGNITION MODULE	**C30**	ELECTRONIC IGNITION KIT	**E01**	IGNITION CABLE SET		

The present application list is a brief version. For the detailed information about the possibility of installation on a specific vehicle, please refer to our web-catalogue http://catalogo.facet.eu/

Vehicle	alim.	kW	Date	Engine	FUNCTIONS ON THE VEHICLE							
					A10	A20	A40	A50	A70	C10 - C30	C20	E01
C 200 4-matic	Petrol	135	04/15-08/18	**M 274.920**								
All engines				SA A701/784K, x 4, DELPHI, MADE BY: (TJ), without protection hose, COIL ON PLUG, without protection hose, x 4, COIL ON PLUG, FOR: (TJ), without protection hose, COIL ON PLUG, FOR: (TJ)						9.6526 C10		
C 250	Petrol	155	03/14-05/18	**M 274.920**								
All engines				MADE BY: (TJ), SA A701/784K, x 4, DELPHI, without protection hose, x 4, COIL ON PLUG, without protection hose, COIL ON PLUG, FOR: (TJ), FOR: (TJ)						9.6526 C10		
C 300	Petrol	180	09/15-12/18	**M 274.920**								
All engines				SA A701/784K, x 4, DELPHI, without protection hose, x 4, COIL ON PLUG, without protection hose, COIL ON PLUG, FOR: (TJ), FOR: (TJ)						9.6526 C10		
C 300 4-matic	Petrol	180	12/13-08/18	**M 274.920**								
All engines				SA A701/784K, x 4, DELPHI, MADE BY: (TJ), without protection hose, x 4, COIL ON PLUG, without protection hose, COIL ON PLUG, FOR: (TJ)						9.6526 C10		
C 300 e	Petrol/ Electric	155	07/19->	**M 274.920**								
All engines				x 4, DELPHI, without protection hose, COIL ON PLUG, without protection hose, COIL ON PLUG, FOR: (TJ)						9.6526 C10		
C 300 e	Petrol/ Electric	235	07/19->	**M 274.920**								
All engines				x 4, DELPHI, without protection hose, COIL ON PLUG, without protection hose, COIL ON PLUG, FOR: (TJ)						9.6526 C10		
C 300 e 4-matic	Petrol/ Electric	155	07/19->	**M 274.920**								
All engines				x 4, DELPHI, without protection hose, COIL ON PLUG, without protection hose, COIL ON PLUG, FOR: (TJ)						9.6526 C10		
C 350 e	Petrol/ Electric	155	02/15-08/18	**M 274.920**								
All engines				MADE BY: (TJ), x 4, DELPHI, x 4, without protection hose, COIL ON PLUG, FOR: (TJ)						9.6526 C10		
C 350 e	Petrol/ Electric	205	02/15-08/18	**M 274.920**								
All engines				MADE BY: (TJ), x 4, DELPHI, x 4, without protection hose, COIL ON PLUG, FOR: (TJ)						9.6526 C10		
CLASSE CLA												
AMG CLA 45 4-matic	Petrol	280	07/15-03/19	**M 133.980**								
All engines				x 4, DELPHI, without protection hose, COIL ON PLUG						9.6526 C10		
CLA 180	Petrol	90	01/13-03/19	**M 270.910**								
All engines				MADE BY: (TJ), x 4, without protection hose, COIL ON PLUG, FOR: (TJ)						9.6526 C10		
CLA 200	Petrol	110	07/18-03/19	**M 270.910**								
All engines				x 4, without protection hose, COIL ON PLUG, FOR: (TJ)						9.6526 C10		

A10	CONDENSER	**A20**	CONTACT SET	**A40**	DISTRIBUTOR CAP	**A50**	ROTOR	**A70**	PICK-UP
C10	COIL	**C20**	IGNITION MODULE	**C30**	ELECTRONIC IGNITION KIT	**E01**	IGNITION CABLE SET		

The present application list is a brief version. For the detailed information about the possibility of installation on a specific vehicle, please refer to our web-catalogue http://catalogo.facet.eu/

Vehicle	alim.	kW	Date	Engine	FUNCTIONS ON THE VEHICLE							
					A10	A20	A40	A50	A70	C10 - C30	C20	E01
CLA 200	Petrol	115	01/13-03/19	**M 270.910**						9.6526 C10		
All engines				MADE BY: (TJ), x 4, without protection hose, x 4, COIL ON PLUG, without protection hose, COIL ON PLUG, FOR: (TJ), FOR: (TJ)								
CLA 220 4-matic	Petrol	135	01/15->	**M 270.910, M 270.920**								
Eng. M 270.910				MADE BY: (TJ), Qty: 4						9.6526 C10		
Eng. M 270.920				SA A701, x 4, DELPHI, without protection hose, x 4, COIL ON PLUG, without protection hose, COIL ON PLUG, FOR: (TJ), FOR: (TJ)						9.6526 C10		
CLA 250	Petrol	155	01/13-03/19	**M 270.920**								
All engines				x 4, DELPHI, without protection hose, COIL ON PLUG						9.6526 C10		
CLA 250	Petrol	160	07/15-03/19	**M 270.920**								
All engines				x 4, DELPHI, without protection hose, COIL ON PLUG						9.6526 C10		
CLA 250 4-matic	Petrol	155	07/13-03/19	**M 270.920**								
All engines				x 4, DELPHI, without protection hose, COIL ON PLUG						9.6526 C10		
CLA 250 4-matic	Petrol	160	07/15-03/19	**M 270.920**								
All engines				x 4, DELPHI, without protection hose, COIL ON PLUG						9.6526 C10		
CLA 45 AMG 4-matic	Petrol	265	07/13-03/19	**M 133.980**								
All engines				x 4, DELPHI, without protection hose, COIL ON PLUG						9.6526 C10		
CLASSE CLC												
CLC 160	Petrol	95	02/09-06/11	**M 271.911, M 271.921**								
Eng. M 271.911				x 4, COIL ON PLUG						9.6320 C10		
Eng. M 271.921				Qty: 4						9.6320 C10		
CLC 180 Kompressor	Petrol	0	05/08-06/11	**M 271.940**								
All engines				Qty: 4						9.6320 C10		
CLC 180 Kompressor	Petrol	105	05/08-06/11	**M 271.946**								
All engines				x 4, COIL ON PLUG						9.6320 C10		
CLC 200 Kompressor	Petrol	135	05/08-06/11	**M 271.957**								
All engines				x 4, COIL ON PLUG						9.6320 C10		
CLC 230	Petrol	150	05/08-06/11	**M 272.920**								
All engines				x 6, COIL ON PLUG						9.6387 C10		
CLC 250	Petrol	150	06/09-06/11	**M 272.920**								
All engines				x 6, COIL ON PLUG						9.6387 C10		
CLC 350	Petrol	200	05/08-06/11	**M 272.960**								
All engines				x 6, COIL ON PLUG						9.6387 C10		

A10	CONDENSER	**A20**	CONTACT SET	**A40**	DISTRIBUTOR CAP	**A50**	ROTOR	**A70**	PICK-UP
C10	COIL	**C20**	IGNITION MODULE	**C30**	ELECTRONIC IGNITION KIT	**E01**	IGNITION CABLE SET		

The present application list is a brief version. For the detailed information about the possibility of installation on a specific vehicle, please refer to our web-catalogue http://catalogo.facet.eu/

Vehicle	alim.	kW	Date	Engine	FUNCTIONS ON THE VEHICLE: A10	A20	A40	A50	A70	C10 - C30	C20	E01

CLASSE CLK I

Vehicle	alim.	kW	Date	ENGINE
200	Petrol	100	06/97-06/02	M 111.945

Engine	Information	A10	A20	A40	A50	A70	C10 - C30		C20	E01
All engines	x 2, SEMI-DIRECT, Dia: 4 mm, connector type, saw teeth						9.6216	C10		

Vehicle	alim.	kW	Date	ENGINE
200 Kompressor	Petrol	141	06/97-06/00	M 111.944

Engine	Information	A10	A20	A40	A50	A70	C10 - C30		C20	E01
All engines	x 2, SEMI-DIRECT, Dia: 4 mm, connector type, saw teeth						9.6216	C10		

Vehicle	alim.	kW	Date	ENGINE
230 Kompressor	Petrol	142	06/97-06/00	M 111.975

Engine	Information	A10	A20	A40	A50	A70	C10 - C30		C20	E01
All engines	x 2, SEMI-DIRECT, Dia: 4 mm, connector type, saw teeth						9.6216	C10		

Vehicle	alim.	kW	Date	ENGINE
320	Petrol	160	06/97-06/02	M 112.940

Engine	Information	A10	A20	A40	A50	A70	C10 - C30		C20	E01
All engines	x 6, COIL ON PLUG						9.6317	C10		
All engines										4.9649

Vehicle	alim.	kW	Date	ENGINE
430	Petrol	205	07/98-06/02	M 113.943

Engine	Information	A10	A20	A40	A50	A70	C10 - C30		C20	E01
All engines	x 8, COIL ON PLUG						9.6317	C10		

Vehicle	alim.	kW	Date	ENGINE
55 AMG	Petrol	255	08/99-12/03	M 113.984

Engine	Information	A10	A20	A40	A50	A70	C10 - C30		C20	E01
All engines	x 8, COIL ON PLUG						9.6317	C10		

CLASSE CLK II

Vehicle	alim.	kW	Date	ENGINE
200 CGI	Petrol	125	07/03-05/09	M 271.942

Engine	Information	A10	A20	A40	A50	A70	C10 - C30		C20	E01
All engines	x 4, COIL ON PLUG						9.6320	C10		

Vehicle	alim.	kW	Date	ENGINE
200 Kompressor	Petrol	120	09/02-05/09	M 271.940

Engine	Information	A10	A20	A40	A50	A70	C10 - C30		C20	E01
All engines	x 4, COIL ON PLUG						9.6320	C10		

Vehicle	alim.	kW	Date	ENGINE
200 Kompressor	Petrol	135	10/06-05/09	M 271.955

Engine	Information	A10	A20	A40	A50	A70	C10 - C30		C20	E01
All engines	x 4, COIL ON PLUG						9.6320	C10		

Vehicle	alim.	kW	Date	ENGINE
240	Petrol	120	06/02-05/09	M 112.912

Engine	Information	A10	A20	A40	A50	A70	C10 - C30		C20	E01
All engines	x 6, COIL ON PLUG						9.6317	C10		
All engines										4.9649

Vehicle	alim.	kW	Date	ENGINE
240	Petrol	125	06/02-05/09	M 112.912

Engine	Information	A10	A20	A40	A50	A70	C10 - C30		C20	E01
All engines	x 6, COIL ON PLUG						9.6317	C10		
All engines										4.9649

Vehicle	alim.	kW	Date	ENGINE
280	Petrol	170	01/05-05/09	M 272.940

Engine	Information	A10	A20	A40	A50	A70	C10 - C30		C20	E01
All engines	x 6, COIL ON PLUG						9.6387	C10		

Vehicle	alim.	kW	Date	ENGINE
320	Petrol	160	06/02-05/09	M 112.955

Engine	Information	A10	A20	A40	A50	A70	C10 - C30		C20	E01
All engines	x 6, COIL ON PLUG						9.6317	C10		
All engines										4.9649

A10	CONDENSER	A20	CONTACT SET	A40	DISTRIBUTOR CAP	A50	ROTOR	A70	PICK-UP
C10	COIL	C20	IGNITION MODULE	C30	ELECTRONIC IGNITION KIT	E01	IGNITION CABLE SET		

The present application list is a brief version. For the detailed information about the possibility of installation on a specific vehicle, please refer to our web-catalogue http://catalogo.facet.eu/

Vehicle	alim.	kW	Date	Engine	FUNCTIONS ON THE VEHICLE							
					A10	A20	A40	A50	A70	C10 - C30	C20	E01
350	Petrol	**200**	01/05-05/09	**M 272.960**								
All engines	x 6, COIL ON PLUG									9.6387 C10		
500	Petrol	**225**	06/02-05/09	**M 113.968**								
All engines	x 8, COIL ON PLUG									9.6317 C10		
500	Petrol	**285**	06/06->	**M 273.967**								
All engines	Qty: 8									9.6387 C10		
All engines	x 8, COIL ON PLUG									9.6387 C10		
55 AMG	Petrol	**270**	09/02-05/09	**M 113.987**								
All engines	x 8, COIL ON PLUG									9.6317 C10		
550	Petrol	**285**	06/06->	**M 273.967**								
All engines	Qty: 8									9.6387 C10		
CLK 200 CGI	Petrol	**125**	07/03-03/10	**M 271.942**								
All engines	->eng. 30853899, eng. type 30853900 ->, x 4, COIL ON PLUG									9.6320 C10		
CLK 200 Kompressor	Petrol	**120**	02/03-03/10	**M 271.940**								
All engines	x 4, COIL ON PLUG									9.6320 C10		
CLK 200 Kompressor	Petrol	**135**	10/06-03/10	**M 271.955**								
All engines	x 4, COIL ON PLUG									9.6320 C10		
CLK 240	Petrol	**125**	02/03-03/10	**M 112.912**								
All engines	x 6, COIL ON PLUG									9.6317 C10		
All engines												4.9649
CLK 280	Petrol	**170**	01/05-03/10	**M 272.940**								
All engines	x 6, COIL ON PLUG									9.6387 C10		
CLK 320	Petrol	**160**	02/03-03/10	**M 112.955**								
All engines	x 6, COIL ON PLUG									9.6317 C10		
All engines												4.9649
CLK 350	Petrol	**200**	01/05-03/10	**M 272.960**								
All engines	x 6, COIL ON PLUG									9.6387 C10		
CLK 500	Petrol	**225**	02/03-03/10	**M 113.968**								
All engines	x 8, COIL ON PLUG									9.6317 C10		
CLK 500	Petrol	**285**	06/06-03/10	**M 273.967**								
All engines	x 8, COIL ON PLUG									9.6387 C10		

A10	CONDENSER	**A20**	CONTACT SET	**A40**	DISTRIBUTOR CAP	**A50**	ROTOR	**A70**	PICK-UP
C10	COIL	**C20**	IGNITION MODULE	**C30**	ELECTRONIC IGNITION KIT	**E01**	IGNITION CABLE SET		

The present application list is a brief version. For the detailed information about the possibility of installation on a specific vehicle, please refer to our web-catalogue http://catalogo.facet.eu/

Vehicle	alim.	kW	Date	Engine	FUNCTIONS ON THE VEHICLE A10	A20	A40	A50	A70	C10 - C30	C20	E01
CLK 55 AMG	Petrol	270	06/02-03/10	ENGINE M 113.987								
Engine: All engines	Information: x 8, COIL ON PLUG									9.6317 C10		
CLASSE CLS I												
CLS 280	Petrol	170	07/08-12/10	ENGINE M 272.943								
Engine: All engines	Information: x 6, COIL ON PLUG									9.6387 C10		
CLS 300	Petrol	170	04/09-12/10	ENGINE M 272.943								
Engine: All engines	Information: x 6, COIL ON PLUG									9.6387 C10		
CLS 350	Petrol	200	10/04-12/10	ENGINE M 272.964								
Engine: All engines	Information: x 6, COIL ON PLUG									9.6387 C10		
CLS 500	Petrol	225	10/04-12/10	ENGINE M 113.967								
Engine: All engines	Information: x 8, COIL ON PLUG									9.6317 C10		
CLS 500	Petrol	285	04/06-12/10	ENGINE M 273.960								
Engine: All engines	Information: x 8, COIL ON PLUG									9.6387 C10		
CLS 55 AMG	Petrol	350	01/05-12/10	ENGINE M 113.990								
Engine: All engines	Information: x 8, COIL ON PLUG									9.6317 C10		
CLS 550	Petrol	285	04/06-02/11	ENGINE M 273.960								
Engine: All engines	Information: Qty: 8									9.6387 C10		
CLASSE CLS II												
CLS 250	Petrol	0	05/14->	ENGINE M 274.920								
Engine: All engines	Information: Qty: 4, version Delphi									9.6526 C10		
CLASSE E												
E 280	Petrol	150	07/99-11/02	ENGINE M 112.921								
Engine: All engines	Information: x 6, COIL ON PLUG									9.6317 C10		
CLASSE E I												
E 200	Petrol	100	06/93-03/98	ENGINE M 111.940								
Engine: All engines	Information: Qty: 2									9.6217 C10		
E 200 T	Petrol	100	06/93-06/96	ENGINE M 111.940								
Engine: All engines	Information: Qty: 2									9.6217 C10		
E 220	Petrol	110	06/93-03/98	ENGINE M 111.960								
Engine: All engines	Information: Qty: 2									9.6217 C10		
E 220 T	Petrol	110	06/93-06/96	ENGINE M 111.960								
Engine: All engines	Information: Qty: 2									9.6217 C10		

A10	CONDENSER	**A20**	CONTACT SET	**A40**	DISTRIBUTOR CAP	**A50**	ROTOR	**A70**	PICK-UP
C10	COIL	**C20**	IGNITION MODULE	**C30**	ELECTRONIC IGNITION KIT	**E01**	IGNITION CABLE SET		

The present application list is a brief version. For the detailed information about the possibility of installation on a specific vehicle, please refer to our web-catalogue http://catalogo.facet.eu/

Vehicle	alim.	kW	Date	Engine	FUNCTIONS ON THE VEHICLE A10	A20	A40	A50	A70	C10 - C30	C20	E01
E 280	Petrol	142	06/93-06/95	**M 104.942**								
All engines	Qty: 3, without spark plug connector									9.6216 C10		
All engines	incl. spark plug connector, Qty: 3									9.6216K C10		
E 280	Petrol	145	06/93-06/95	**M 104.942**								
All engines	Qty: 3, without spark plug connector									9.6216 C10		
All engines	incl. spark plug connector, Qty: 3									9.6216K C10		
E 280 T	Petrol	142	06/93-06/96	**M 104.942**								
All engines	Qty: 3, without spark plug connector									9.6216 C10		
All engines	incl. spark plug connector, Qty: 3									9.6216K C10		
E 280 T	Petrol	145	06/93-06/96	**M 104.942**								
All engines	Qty: 3, without spark plug connector									9.6216 C10		
All engines	incl. spark plug connector, Qty: 3									9.6216K C10		
E 300 4-matic	Petrol	132	06/93-06/95	**M 103.985**								
All engines	version Bosch						2.7530/7PHT	3.7573/25RS				
All engines										9.6078 C10		4.9657
E 300 T 4-matic	Petrol	132	06/93-06/96	**M 103.985**								
All engines	version Bosch						2.7530/7PHT	3.7573/25RS				
All engines										9.6078 C10		4.9657
E 320	Petrol	162	06/93-03/98	**M 104.992**								
All engines	Qty: 3, without spark plug connector									9.6216 C10		
All engines	incl. spark plug connector, Qty: 3									9.6216K C10		
E 320 T	Petrol	162	06/93-06/96	**M 104.992**								
All engines	Qty: 3, without spark plug connector									9.6216 C10		
All engines	incl. spark plug connector, Qty: 3									9.6216K C10		
E 36 AMG	Petrol	195	06/93-04/95	**M 104.992 (AMG 3.6)**								
All engines	Qty: 3, without spark plug connector									9.6216 C10		
All engines	incl. spark plug connector, Qty: 3									9.6216K C10		
E 36 AMG	Petrol	200	05/94-03/98	**M 104.992 (AMG 3.6)**								
All engines	Qty: 3, without spark plug connector									9.6216 C10		
All engines	incl. spark plug connector, Qty: 3									9.6216K C10		
E 36 T AMG	Petrol	200	05/94-06/96	**M 104.992 (AMG 3.6)**								
All engines	Qty: 3, without spark plug connector									9.6216 C10		
All engines	incl. spark plug connector, Qty: 3									9.6216K C10		
E 420	Petrol	205	06/93-06/95	**M 119.975**								
All engines	Qty: 2, version Bosch							3.7573/46RS				
All engines	->ch. B 568955, Qty: 2									9.6078 C10		
All engines	ch. B 568956 ->									9.6079 C10		

A10	CONDENSER	**A20**	CONTACT SET	**A40**	DISTRIBUTOR CAP	**A50**	ROTOR	**A70**	PICK-UP
C10	COIL	**C20**	IGNITION MODULE	**C30**	ELECTRONIC IGNITION KIT	**E01**	IGNITION CABLE SET		

The present application list is a brief version. For the detailed information about the possibility of installation on a specific vehicle, please refer to our web-catalogue http://catalogo.facet.eu/

Vehicle	alim.	kW	Date	Engine	FUNCTIONS ON THE VEHICLE A10	A20	A40	A50	A70	C10 - C30	C20	E01
E 500	Petrol	235	06/93-06/95	ENGINE M 119.974								
Engine	Information											
All engines	Qty: 2, version Bosch							3.7573/46RS				
All engines	->ch. B 568955, Qty: 2									9.6078 C10		
All engines	ch. B 568956 ->									9.6079 C10		
E 60 AMG	Petrol	280	05/94-06/95	ENGINE M 119.974 (AMG 6.0)								
Engine	Information											
All engines	Qty: 2, version Bosch							3.7573/46RS				
All engines	->ch. B 568955, Qty: 2									9.6078 C10		
All engines	ch. B 568956 ->									9.6079 C10		
CLASSE E II												
E 200	Petrol	100	06/95-08/00	ENGINE M 111.942								
Engine	Information											
All engines	x 2, SEMI-DIRECT, Dia: 4 mm, connector type, saw teeth									9.6216 C10		
E 200 Kompressor	Petrol	137	06/97-03/02	ENGINE M 111.947								
Engine	Information											
All engines	x 2, SEMI-DIRECT, Dia: 4 mm, connector type, saw teeth									9.6216 C10		
E 200 T	Petrol	100	06/96-08/00	ENGINE M 111.942								
Engine	Information											
All engines	x 2, SEMI-DIRECT, Dia: 4 mm, connector type, saw teeth									9.6216 C10		
E 200 T Kompressor	Petrol	137	06/97-03/03	ENGINE M 111.947								
Engine	Information											
All engines	x 2, SEMI-DIRECT, Dia: 4 mm, connector type, saw teeth									9.6216 C10		
E 230	Petrol	110	06/95-06/97	ENGINE M 111.970								
Engine	Information											
All engines	x 2, SEMI-DIRECT, Dia: 4 mm, connector type, saw teeth									9.6216 C10		
E 230 T	Petrol	110	06/96-06/97	ENGINE M 111.970								
Engine	Information											
All engines	x 2, SEMI-DIRECT, Dia: 4 mm, connector type, saw teeth									9.6216 C10		
E 240	Petrol	125	06/97-03/02	ENGINE M 112.911, M 112.914								
Engine	Information											
All engines	x 6, COIL ON PLUG									9.6317 C10		
All engines												4.9649
E 240 T	Petrol	125	06/97-03/03	ENGINE M 112.911, M 112.914								
Engine	Information											
All engines	x 6, COIL ON PLUG									9.6317 C10		
All engines												4.9649
E 280	Petrol	142	01/96-06/97	ENGINE M 104.945								
Engine	Information											
All engines	x 3, SEMI-DIRECT, Dia: 4 mm, connector type, saw teeth									9.6216 C10		
E 280	Petrol	150	12/96-03/02	ENGINE M 112.921								
Engine	Information											
All engines	x 6, COIL ON PLUG									9.6317 C10		
All engines												4.9649
E 280 4-matic	Petrol	150	12/96-03/02	ENGINE M 112.921								
Engine	Information											
All engines	x 6, COIL ON PLUG									9.6317 C10		
All engines												4.9649

A10	CONDENSER	**A20**	CONTACT SET	**A40**	DISTRIBUTOR CAP	**A50**	ROTOR	**A70**	PICK-UP
C10	COIL	**C20**	IGNITION MODULE	**C30**	ELECTRONIC IGNITION KIT	**E01**	IGNITION CABLE SET		

The present application list is a brief version. For the detailed information about the possibility of installation on a specific vehicle, please refer to our web-catalogue http://catalogo.facet.eu/

Vehicle	alim.	kW	Date	Engine	FUNCTIONS ON THE VEHICLE A10	A20	A40	A50	A70	C10 - C30	C20	E01
E 280 T	Petrol	150	12/96-03/03	**M 112.921**								
All engines	x 6, COIL ON PLUG									9.6317 C10		
All engines												4.9649
E 280 T 4-matic	Petrol	150	12/96-03/03	**M 112.921**								
All engines	x 6, COIL ON PLUG									9.6317 C10		
All engines												4.9649
E 320	Petrol	162	06/95-06/97	**M 104.995**								
All engines	x 3, SEMI-DIRECT, Dia: 4 mm, connector type, saw teeth									9.6216 C10		
E 320	Petrol	165	06/97-03/02	**M 112.941**								
All engines	x 6, COIL ON PLUG									9.6317 C10		
All engines												4.9649
E 320 4-matic	Petrol	165	06/97-03/02	**M 112.941**								
All engines	x 6, COIL ON PLUG									9.6317 C10		
All engines												4.9649
E 320 T	Petrol	165	12/96-03/03	**M 112.941**								
All engines	x 6, COIL ON PLUG									9.6317 C10		
All engines												4.9649
E 320 T 4-matic	Petrol	165	12/96-03/03	**M 112.941**								
All engines	x 6, COIL ON PLUG									9.6317 C10		
All engines												4.9649
E 36 AMG	Petrol	200	04/96-01/98	**M 104995AMG**								
All engines	x 3, SEMI-DIRECT, Dia: 4 mm, connector type, saw teeth									9.6216 C10		
E 430	Petrol	205	06/97-03/02	**M 113.940**								
All engines	x 8, COIL ON PLUG									9.6317 C10		
E 430 4-matic	Petrol	205	05/99-03/02	**M 113.940**								
All engines	x 8, COIL ON PLUG									9.6317 C10		
E 430 T	Petrol	205	06/97-03/03	**M 113.940**								
All engines	x 8, COIL ON PLUG									9.6317 C10		
E 430 T 4-matic	Petrol	205	05/99-03/03	**M 113.940**								
All engines	x 8, COIL ON PLUG									9.6317 C10		
E 55 AMG	Petrol	260	08/97-03/02	**M 113.980**								
All engines	x 8, COIL ON PLUG									9.6317 C10		

A10	CONDENSER	**A20**	CONTACT SET	**A40**	DISTRIBUTOR CAP	**A50**	ROTOR	**A70**	PICK-UP
C10	COIL	**C20**	IGNITION MODULE	**C30**	ELECTRONIC IGNITION KIT	**E01**	IGNITION CABLE SET		

The present application list is a brief version. For the detailed information about the possibility of installation on a specific vehicle, please refer to our web-catalogue http://catalogo.facet.eu/

Vehicle	alim.	kW	Date	Engine	FUNCTIONS ON THE VEHICLE A10	A20	A40	A50	A70	C10 - C30	C20	E01
E 55 T AMG	Petrol	260	08/97-03/03	**M 113.980**								
Engine: All engines	Information: x 8, COIL ON PLUG									9.6317 C10		
CLASSE E III												
350 CGI	Petrol	215	05/06-07/09	**M 272.985**								
Engine: All engines	Information: ->year 01/09/06, x 6, COIL ON PLUG									9.6387 C10		
E 200 Kompressor	Petrol	120	11/02-12/08	**M 271.941**								
Engine: All engines	Information: x 4, COIL ON PLUG									9.6320 C10		
E 200 Kompressor	Petrol	135	04/06-07/09	**M 271.956**								
Engine: All engines	Information: ->eng. 30853899, x 4, COIL ON PLUG									9.6320 C10		
E 200 NGT	Petrol/ Compressed Natural Gas (CNG)	120	03/04-12/08	**M 271.941, M 271941NGT**								
Engine: Eng. M 271.941	Information: Qty: 4									9.6320 C10		
Engine: Eng. M 271941NGT	Information: ->eng. 30853899, x 4, COIL ON PLUG									9.6320 C10		
E 200 T Kompressor	Petrol	120	03/03-07/09	**M 271.941**								
Engine: All engines	Information: x 4, COIL ON PLUG									9.6320 C10		
E 230	Petrol	150	09/07-12/08	**M 272.922**								
Engine: All engines	Information: x 6, COIL ON PLUG									9.6387 C10		
E 230 T	Petrol	150	05/07-07/09	**M 272.922**								
Engine: All engines	Information: x 6, COIL ON PLUG									9.6387 C10		
E 240	Petrol	130	03/02-12/08	**M 112.913**								
Engine: All engines	Information: x 6, COIL ON PLUG									9.6317 C10		
Engine: All engines	Information:											4.9649
E 240 4-matic	Petrol	130	03/03-12/08	**M 112.917**								
Engine: All engines	Information: x 6, COIL ON PLUG									9.6317 C10		
Engine: All engines	Information:											4.9649
E 240 T	Petrol	130	03/03-07/09	**M 112.913**								
Engine: All engines	Information: x 6, COIL ON PLUG									9.6317 C10		
Engine: All engines	Information:											4.9649
E 240 T 4-matic	Petrol	130	07/03-07/09	**M 112.917**								
Engine: All engines	Information: x 6, COIL ON PLUG									9.6317 C10		
Engine: All engines	Information:											4.9649
E 250	Petrol	150	09/07-12/08	**M 272.922**								
Engine: All engines	Information: Qty: 6									9.6387 C10		

A10	CONDENSER	**A20**	CONTACT SET	**A40**	DISTRIBUTOR CAP	**A50**	ROTOR	**A70**	PICK-UP
C10	COIL	**C20**	IGNITION MODULE	**C30**	ELECTRONIC IGNITION KIT	**E01**	IGNITION CABLE SET		

The present application list is a brief version. For the detailed information about the possibility of installation on a specific vehicle, please refer to our web-catalogue http://catalogo.facet.eu/

Vehicle	alim.	kW	Date	Engine	FUNCTIONS ON THE VEHICLE A10	A20	A40	A50	A70	C10 - C30	C20	E01
E 280	Petrol	170	03/05-12/08	**M 272.943**								
All engines	x 6, COIL ON PLUG									9.6387 C10		
E 280 4-matic	Petrol	170	03/05-12/08	**9930.61, M 272944**								
Eng. 9930.61	Qty: 6									9.6387 C10		
Eng. M 272944	x 6, COIL ON PLUG									9.6387 C10		
E 280 T	Petrol	170	03/05-07/09	**M 272.943**								
All engines	x 6, COIL ON PLUG									9.6387 C10		
E 280 T 4-matic	Petrol	170	03/05-07/09	**9930.61, M 272944**								
Eng. 9930.61	Qty: 6									9.6387 C10		
Eng. M 272944	x 6, COIL ON PLUG									9.6387 C10		
E 300	Petrol	170	03/05-12/08	**M 272.943**								
All engines	Qty: 6									9.6387 C10		
E 300 T 4-matic	Petrol	170	03/05-07/09	**9930.61**								
All engines	Qty: 6									9.6387 C10		
E 320	Petrol	165	03/02-12/08	**M 112.949**								
All engines	x 6, COIL ON PLUG									9.6317 C10		
All engines												4.9649
E 320 4-matic	Petrol	165	03/03-12/08	**M 112.954**								
All engines	x 6, COIL ON PLUG									9.6317 C10		
All engines												4.9649
E 320 T	Petrol	165	03/03-07/09	**M 112.949**								
All engines	x 6, COIL ON PLUG									9.6317 C10		
All engines												4.9649
E 320 T 4-matic	Petrol	165	07/03-07/09	**M 112.954**								
All engines	x 6, COIL ON PLUG									9.6317 C10		
All engines												4.9649
E 350	Petrol	200	03/05-12/08	**M 272.964**								
All engines	x 6, COIL ON PLUG									9.6387 C10		
E 350 4-matic	Petrol	200	03/05-12/08	**M 272.972**								
All engines	x 6, COIL ON PLUG									9.6387 C10		
E 350 4-matic	Petrol	205	08/04-08/06	**M 272.972**								
All engines	Qty: 6									9.6387 C10		

A10	CONDENSER	**A20**	CONTACT SET	**A40**	DISTRIBUTOR CAP	**A50**	ROTOR	**A70**	PICK-UP
C10	COIL	**C20**	IGNITION MODULE	**C30**	ELECTRONIC IGNITION KIT	**E01**	IGNITION CABLE SET		

The present application list is a brief version. For the detailed information about the possibility of installation on a specific vehicle, please refer to our web-catalogue http://catalogo.facet.eu/

Vehicle	alim.	kW	Date	Engine	FUNCTIONS ON THE VEHICLE							
					A10	A20	A40	A50	A70	C10 - C30	C20	E01
E 350 CGI	Petrol	215	09/07-12/08	ENGINE M 272.985								
Engine: All engines	Information: ->year 01/09/06, ->eng. 30417696, x 6, COIL ON PLUG									9.6387 C10		
E 350 T	Petrol	200	03/05-07/09	ENGINE M 272.964								
Engine: All engines	Information: x 6, COIL ON PLUG									9.6387 C10		
E 350 T 4-matic	Petrol	200	03/05-07/09	ENGINE M 272.972								
Engine: All engines	Information: x 6, COIL ON PLUG									9.6387 C10		
E 500	Petrol	225	03/02-12/08	ENGINE M 113.967								
Engine: All engines	Information: x 8, COIL ON PLUG									9.6317 C10		
E 500	Petrol	285	04/06-12/08	ENGINE M 273.960								
Engine: All engines	Information: x 8, COIL ON PLUG									9.6387 C10		
E 500 4-matic	Petrol	225	10/03-12/08	ENGINE M 113.969								
Engine: All engines	Information: x 8, COIL ON PLUG									9.6317 C10		
E 500 4-matic	Petrol	285	04/06-12/08	ENGINE M 273.962								
Engine: All engines	Information: x 8, COIL ON PLUG									9.6387 C10		
E 500 T	Petrol	225	10/03-07/09	ENGINE M 113.967								
Engine: All engines	Information: x 8, COIL ON PLUG									9.6317 C10		
E 500 T	Petrol	285	04/06-07/09	ENGINE M 273.960								
Engine: All engines	Information: x 8, COIL ON PLUG									9.6387 C10		
E 500 T 4-matic	Petrol	225	10/03-07/09	ENGINE M 113.969								
Engine: All engines	Information: x 8, COIL ON PLUG									9.6317 C10		
E 500 T 4-matic	Petrol	285	04/06-07/09	ENGINE M 273.962								
Engine: All engines	Information: x 8, COIL ON PLUG									9.6387 C10		
E 55 AMG Kompressor	Petrol	350	10/02-12/08	ENGINE M 113.990								
Engine: All engines	Information: x 8, COIL ON PLUG									9.6317 C10		
E 55 T AMG Kompressor	Petrol	350	07/03-07/09	ENGINE M 113.990								
Engine: All engines	Information: x 8, COIL ON PLUG									9.6317 C10		
E 550 4-matic	Petrol	285	04/06-12/08	ENGINE M 273.962								
Engine: All engines	Information: Qty: 8									9.6387 C10		
E 550 T 4-matic	Petrol	285	04/06-07/09	ENGINE M 273.962								
Engine: All engines	Information: Qty: 8									9.6387 C10		

A10	CONDENSER	A20	CONTACT SET	A40	DISTRIBUTOR CAP	A50	ROTOR	A70	PICK-UP
C10	COIL	C20	IGNITION MODULE	C30	ELECTRONIC IGNITION KIT	E01	IGNITION CABLE SET		

The present application list is a brief version. For the detailed information about the possibility of installation on a specific vehicle, please refer to our web-catalogue http://catalogo.facet.eu/

Vehicle	alim.	kW	Date	Engine	FUNCTIONS ON THE VEHICLE A10	A20	A40	A50	A70	C10 - C30	C20	E01
CLASSE E IV												
E 180	Petrol	115	12/12->	ENGINE M 274.910								
Engine: All engines				Information: MADE BY: (TJ), x 4, DELPHI, x 4, without protection hose, COIL ON PLUG, FOR: (TJ)						9.6526 C10		
Engine: All engines				Information: Qty: 4						9.6526 C10		
E 200	Petrol	135	11/12-12/16	ENGINE M 274.920								
Engine: All engines				Information: MADE BY: (TJ), MADE BY: (USA), x 4, DELPHI, x 4, without protection hose, COIL ON PLUG, FOR: (TJ)						9.6526 C10		
E 200 CGI	Petrol	135	08/09-12/16	ENGINE M 271.820, M 271.860								
Engine: All engines				Information: x 4, COIL ON PLUG						9.6320 C10		
E 200 NGT	Petrol/ Compressed Natural Gas (CNG)	115	07/13-12/15	ENGINE M 274.920, M 274920NGT								
Engine: Eng. M 274.920				Information: Qty: 4						9.6526 C10		
Engine: Eng. M 274920NGT				Information: MADE BY: (TJ), x 4, DELPHI, x 4, without protection hose, COIL ON PLUG, FOR: (TJ)						9.6526 C10		
E 200 NGT	Petrol/ Compressed Natural Gas (CNG)	120	03/11-12/15	ENGINE M 271.958, M 271958NGT								
Engine: Eng. M 271.958				Information: Qty: 4						9.6320 C10		
Engine: Eng. M 271958NGT				Information: x 4, COIL ON PLUG						9.6320 C10		
E 250	Petrol	150	01/10->	ENGINE M 272.923								
Engine: All engines				Information: Qty: 6						9.6387 C10		
E 250	Petrol	155	11/12-12/16	ENGINE M 274.920								
Engine: All engines				Information: MADE BY: (TJ), x 4, DELPHI, x 4, without protection hose, COIL ON PLUG, FOR: (TJ)						9.6526 C10		
E 250 CGI	Petrol	150	01/09-12/16	ENGINE M 271.860								
Engine: All engines				Information: x 4, COIL ON PLUG						9.6320 C10		
E 300	Petrol	170	01/09-12/13	ENGINE M 272.952								
Engine: All engines				Information: x 6, COIL ON PLUG						9.6387 C10		
E 300	Petrol	200	01/10->	ENGINE M 272.980								
Engine: All engines				Information: Qty: 6						9.6387 C10		
E 350	Petrol	200	01/09->	ENGINE M 272.961, M 272.980, M 272.988								
Engine: All engines				Information: x 6, COIL ON PLUG						9.6387 C10		
Engine: Eng. M 272.961				Information: Qty: 6						9.6387 C10		
E 350 4-matic	Petrol	200	01/09-12/11	ENGINE M 272.977								
Engine: All engines				Information: x 6, COIL ON PLUG						9.6387 C10		

A10	CONDENSER	**A20**	CONTACT SET	**A40**	DISTRIBUTOR CAP	**A50**	ROTOR	**A70**	PICK-UP
C10	COIL	**C20**	IGNITION MODULE	**C30**	ELECTRONIC IGNITION KIT	**E01**	IGNITION CABLE SET		

The present application list is a brief version. For the detailed information about the possibility of installation on a specific vehicle, please refer to our web-catalogue http://catalogo.facet.eu/

Vehicle	alim.	kW	Date	Engine	FUNCTIONS ON THE VEHICLE							
					A10	A20	A40	A50	A70	C10 - C30	C20	E01
E 500	Petrol	285	01/09-12/16	ENGINE M 273.966, M 273.971								
Engine: All engines	Information: x 8, COIL ON PLUG									9.6387 C10		
E 500 4-matic	Petrol	285	01/09-12/11	ENGINE M 273.970								
Engine: All engines	Information: x 8, COIL ON PLUG									9.6387 C10		
E 550 [USA]	Petrol	295	01/09->	ENGINE M 273.966								
Engine: All engines	Information: Qty: 8									9.6387 C10		
E 550 [USA] [CAN] [JPN]	Petrol	295	01/09->	ENGINE M 273.971								
Engine: All engines	Information: Qty: 8									9.6387 C10		
E 550 4-matic [USA] [CAN]	Petrol	295	01/09->	ENGINE M 273.970								
Engine: All engines	Information: Qty: 8									9.6387 C10		
CLASSE E V												
E 180	Petrol	115	01/17->	ENGINE M 274.910								
Engine: All engines	Information: ->year 01/06/21, x 4, DELPHI, x 4, without protection hose, COIL ON PLUG, FOR: (TJ)									9.6526 C10		
E 200	Petrol	135	01/16->	ENGINE M 274.920								
Engine: All engines	Information: SA A701/784K, x 4, DELPHI, without protection hose, x 4, COIL ON PLUG, without protection hose, COIL ON PLUG, FOR: (TJ), FOR: (TJ)									9.6526 C10		
E 200 4-matic	Petrol	135	07/16->	ENGINE M 274.920								
Engine: All engines	Information: x 4, DELPHI, without protection hose, COIL ON PLUG, without protection hose, COIL ON PLUG, FOR: (TJ)									9.6526 C10		
E 250	Petrol	155	07/16->	ENGINE M 274.920								
Engine: All engines	Information: SA A701/784K, x 4, DELPHI, x 4, without protection hose, COIL ON PLUG, FOR: (TJ)									9.6526 C10		
E 300	Petrol	180	07/16->	ENGINE M 274.920								
Engine: All engines	Information: x 4, DELPHI, without protection hose, COIL ON PLUG, without protection hose, COIL ON PLUG, FOR: (TJ)									9.6526 C10		
E 300 e	Petrol/ Electric	155	11/18->	ENGINE M 274.920								
Engine: All engines	Information: x 4, DELPHI, without protection hose, COIL ON PLUG, without protection hose, COIL ON PLUG, FOR: (TJ)									9.6526 C10		
E 300 e	Petrol/ Electric	235	11/18->	ENGINE M 274.920								
Engine: All engines	Information: x 4, DELPHI, without protection hose, COIL ON PLUG, without protection hose, COIL ON PLUG, FOR: (TJ)									9.6526 C10		
E 300 e 4-matic	Petrol/ Electric	155	07/20->	ENGINE M 274.920								
Engine: All engines	Information: x 4, DELPHI, without protection hose, COIL ON PLUG, without protection hose, COIL ON PLUG, FOR: (TJ)									9.6526 C10		

A10	CONDENSER	A20	CONTACT SET	A40	DISTRIBUTOR CAP	A50	ROTOR	A70	PICK-UP
C10	COIL	C20	IGNITION MODULE	C30	ELECTRONIC IGNITION KIT	E01	IGNITION CABLE SET		

The present application list is a brief version. For the detailed information about the possibility of installation on a specific vehicle, please refer to our web-catalogue http://catalogo.facet.eu/

Vehicle	alim.	kW	Date	Engine	FUNCTIONS ON THE VEHICLE A10	A20	A40	A50	A70	C10 - C30	C20	E01
E 300 e 4-matic	Petrol/ Electric	235	07/20->	**M 274.920**								
All engines	x 4, DELPHI, without protection hose, COIL ON PLUG, without protection hose, COIL ON PLUG, FOR: (TJ)									9.6526	C10		
E 350 e	Petrol/ Electric	155	07/16->	**M 274.920**								
All engines	x 4, DELPHI, without protection hose, COIL ON PLUG, without protection hose, COIL ON PLUG, FOR: (TJ)									9.6526	C10		
E 350 e	Petrol/ Electric	210	07/16->	**M 274.920**								
All engines	x 4, DELPHI, without protection hose, COIL ON PLUG, without protection hose, COIL ON PLUG, FOR: (TJ)									9.6526	C10		
E 350 e	Petrol/ Electric	235	11/19->	**M 274.920**								
All engines	x 4, DELPHI, without protection hose, COIL ON PLUG, without protection hose, COIL ON PLUG, FOR: (TJ)									9.6526	C10		
CLASSE G I												
200 GE	Petrol	80	02/80-08/92	**M 102.964**								
All engines	version Bosch						2.7508PHT	3.7555RS				
All engines										9.6080	C10		4.9654
230 G	Petrol	66	03/79-07/93	**M 115.973**								
All engines	version Bosch					1.2534HDVS	2.7508PHT					
230 G	Petrol	75	02/80-07/87	**M 115.973**								
All engines	version Bosch					1.2534HDVS	2.7508PHT					
230 GE	Petrol	90	05/87-08/92	**M 102.987**								
All engines	version Bosch						2.7508PHT	3.7555RS				
All engines										9.6080	C10		4.9654
230 GE	Petrol	92	04/82-08/92	**M 102.981, M 102.987**								
All engines	version Bosch						2.7508PHT	3.7555RS				
All engines										9.6080	C10		4.9654
280 GE	Petrol	110	08/84-08/89	**M 110.994**								
All engines	version Bosch					1.2534HDVS						
All engines	->eng. 004203, 001498, version Bosch						2.7492PHT					
All engines	eng. type 004204, 001499 ->, version Bosch						2.7523PHT	3.7560RS				
All engines	eng. type 002294, 000115 ->, ->eng. 004203, 001498, version Bosch							3.7524RS				
All engines	->eng. 002293, 000114, version Bosch							3.7534RS				
All engines	ch. 034825, 901172 ->									9.6080	C10		
280 GE	Petrol	115	11/79-08/89	**M 110.994**								
All engines	version Bosch					1.2534HDVS						
All engines	->eng. 004203, 001498, version Bosch						2.7492PHT					
All engines	eng. type 004204, 001499 ->, version Bosch						2.7523PHT	3.7560RS				
All engines	eng. type 002294, 000115 ->, ->eng. 004203, 001498, version Bosch							3.7524RS				
All engines	->eng. 002293, 000114, version Bosch							3.7534RS				

A10	CONDENSER	**A20**	CONTACT SET	**A40**	DISTRIBUTOR CAP	**A50**	ROTOR	**A70**	PICK-UP
C10	COIL	**C20**	IGNITION MODULE	**C30**	ELECTRONIC IGNITION KIT	**E01**	IGNITION CABLE SET		

The present application list is a brief version. For the detailed information about the possibility of installation on a specific vehicle, please refer to our web-catalogue http://catalogo.facet.eu/

Vehicle	alim.	kW	Date	Engine	FUNCTIONS ON THE VEHICLE A10	A20	A40	A50	A70	C10 - C30	C20	E01
280 GE	Petrol	115	11/79-08/89	**M 110.994**								
Engine: All engines	Information: ch. 034825, 901172 ->									9.6080 C10		

CLASSE G II

200 GE	Petrol	80	01/90-07/93	**M 102.965**

Engine	Information	A10	A20	A40	A50	A70	C10 - C30	C20	E01
All engines	version Bosch			2.7530/4PHT	3.7573/21RS				
All engines							9.6078 C10		

200 GE	Petrol	85	01/90-07/93	**M 102.965**

Engine	Information	A10	A20	A40	A50	A70	C10 - C30	C20	E01
All engines	version Bosch			2.7530/4PHT	3.7573/21RS				
All engines							9.6078 C10		

230 G	Petrol	74	04/92->	**M 102.958**

Engine	Information	A10	A20	A40	A50	A70	C10 - C30	C20	E01
All engines	version Bosch			2.7530/4PHT	3.7555RS				

230 GE	Petrol	90	09/89-07/96	**M 102.979**

Engine	Information	A10	A20	A40	A50	A70	C10 - C30	C20	E01
All engines	version Bosch			2.7530/4PHT	3.7573/21RS				
All engines							9.6078 C10		

230 GE	Petrol	92	04/92->	**M 102.981, M 102.996, M 102.997**

Engine	Information	A10	A20	A40	A50	A70	C10 - C30	C20	E01
Eng. M 102.981	version Bosch			2.7508PHT					
Eng. M 102.996, M 102.997	version Bosch			2.7530/4PHT					
All engines	version Bosch				3.7555RS				
Eng. M 102.996, M 102.997							9.6078 C10		
Eng. M 102.981									4.9654

230 GE	Petrol	93	06/90-06/93	**M 102.989**

Engine	Information	A10	A20	A40	A50	A70	C10 - C30	C20	E01
All engines	version Bosch			2.7530/4PHT	3.7573/21RS				
All engines							9.6078 C10		

280 GE	Petrol	110	04/92->	**M 110.994**

Engine	Information	A10	A20	A40	A50	A70	C10 - C30	C20	E01
All engines	->eng. 004203, 001498, version Bosch			2.7492PHT					
All engines	eng. type 004204, 001499 ->, version Bosch			2.7523PHT	3.7560RS				
All engines	eng. type 002294, 000115 ->, ->eng. 004203, 001498, version Bosch				3.7524RS				
All engines	->eng. 002293, 000114, version Bosch				3.7534RS				

300 GE	Petrol	125	09/89-09/97	**M 103.987**

Engine	Information	A10	A20	A40	A50	A70	C10 - C30	C20	E01
All engines	version Bosch			2.7530/7PHT	3.7573/25RS				
All engines							9.6078 C10		4.9657

300 GE	Petrol	128	06/90-08/97	**M 103.987**

Engine	Information	A10	A20	A40	A50	A70	C10 - C30	C20	E01
All engines	version Bosch			2.7530/7PHT	3.7573/25RS				
All engines							9.6078 C10		4.9657

320 GE	Petrol	155	09/94-11/97	**M 104.996**

Engine	Information	A10	A20	A40	A50	A70	C10 - C30	C20	E01
All engines	Qty: 3, without spark plug connector						9.6216 C10		
All engines	incl. spark plug connector, Qty: 3						9.6216K C10		

A10	CONDENSER	**A20**	CONTACT SET	**A40**	DISTRIBUTOR CAP	**A50**	ROTOR	**A70**	PICK-UP
C10	COIL	**C20**	IGNITION MODULE	**C30**	ELECTRONIC IGNITION KIT	**E01**	IGNITION CABLE SET		

The present application list is a brief version. For the detailed information about the possibility of installation on a specific vehicle, please refer to our web-catalogue http://catalogo.facet.eu/

Vehicle	alim.	kW	Date	Engine	FUNCTIONS ON THE VEHICLE A10	A20	A40	A50	A70	C10 - C30	C20	E01
500 GE	Petrol	177	09/93-12/94	**M 117.965**								
Engine	Information						2.7530/9PHT	3.7573/26RS				
All engines	version Bosch									9.6079 C10		
All engines												
G 320	Petrol	154	06/97-11/97	**M 112.945**								
Engine	Information									9.6317 C10		
All engines	Qty: 6											4.9649
All engines												
G 320	Petrol	155	09/94-12/97	**M 104.996**								
Engine	Information									9.6216 C10		
All engines	Qty: 3, without spark plug connector									9.6216K C10		
All engines	incl. spark plug connector, Qty: 3											
G 320	Petrol	158	07/97-08/04	**M 112.945**								
Engine	Information									9.6317 C10		
All engines	Qty: 6											4.9649
All engines												
G 36 AMG	Petrol	200	01/95-07/98	**M 104.996 (AMG 3.6)**								
Engine	Information									9.6216 C10		
All engines	Qty: 3, without spark plug connector									9.6216K C10		
All engines	incl. spark plug connector, Qty: 3											
G 500	Petrol	218	04/98->	**M 113.962**								
Engine	Information									9.6317 C10		
All engines	Qty: 8											
G 500	Petrol	285	01/07->	**M 273.963, M 273.969**								
Engine	Information									9.6387 C10		
All engines	Qty: 8											
G 500 GUARD	Petrol	0	06/10->	**M 273.963**								
Engine	Information									9.6387 C10		
All engines	Qty: 8											
G 55 AMG	Petrol	218	04/98->	**M 113.962**								
Engine	Information									9.6317 C10		
All engines	Qty: 8											
G 55 AMG	Petrol	260	04/99->	**M 113.982**								
Engine	Information									9.6317 C10		
All engines	Qty: 8											
G 55 AMG	Petrol	350	06/04->	**M 113.993**								
Engine	Information									9.6317 C10		
All engines	Qty: 8											
G 55 AMG	Petrol	368	08/06-12/12	**M 113.993**								
Engine	Information									9.6317 C10		
All engines	Qty: 8											
G 55 AMG	Petrol	373	08/08->	**M 113.993**								
Engine	Information									9.6317 C10		
All engines	Qty: 8											
G 550	Petrol	0	06/10->	**M 273.963, M 273.969**								
Engine	Information									9.6387 C10		
All engines	Qty: 8											

A10	CONDENSER	**A20**	CONTACT SET	**A40**	DISTRIBUTOR CAP	**A50**	ROTOR	**A70**	PICK-UP
C10	COIL	**C20**	IGNITION MODULE	**C30**	ELECTRONIC IGNITION KIT	**E01**	IGNITION CABLE SET		

The present application list is a brief version. For the detailed information about the possibility of installation on a specific vehicle, please refer to our web-catalogue http://catalogo.facet.eu/

Vehicle	alim.	kW	Date	Engine	FUNCTIONS ON THE VEHICLE							
					A10	A20	A40	A50	A70	C10 - C30	C20	E01
CLASSE GL I												
GL 450 4-matic	Petrol	250	09/06-08/12	ENGINE M 273.923								
Engine: All engines	Information: x 8, COIL ON PLUG									9.6387 C10		
GL 500 4-matic	Petrol	285	09/06-12/12	ENGINE M 273.963								
Engine: All engines	Information: x 8, COIL ON PLUG									9.6387 C10		
GL 550 4-matic	Petrol	285	09/06->	ENGINE M 273.963								
Engine: All engines	Information: Qty: 8									9.6387 C10		
CLASSE GLA												
AMG GLA 45 4-matic	Petrol	280	07/15->	ENGINE M 133.980								
Engine: All engines	Information: x 4, DELPHI, without protection hose, COIL ON PLUG									9.6526 C10		
GLA 180	Petrol	90	02/15->	ENGINE M 270.910								
Engine: All engines	Information: SA A701, MADE BY: (TJ), x 4, without protection hose, COIL ON PLUG, FOR: (TJ)									9.6526 C10		
GLA 200	Petrol	110	07/18->	ENGINE M 270.910								
Engine: All engines	Information: x 4, without protection hose, COIL ON PLUG, FOR: (TJ)									9.6526 C10		
GLA 200	Petrol	115	12/13->	ENGINE M 270.910								
Engine: All engines	Information: MADE BY: (TJ), x 4, without protection hose, COIL ON PLUG, FOR: (TJ)									9.6526 C10		
GLA 220 4-matic	Petrol	135	01/17->	ENGINE M 270.920								
Engine: All engines	Information: x 4, DELPHI, without protection hose, COIL ON PLUG, without protection hose, COIL ON PLUG, FOR: (TJ)									9.6526 C10		
GLA 250	Petrol	155	12/13->	ENGINE M 270.920								
Engine: All engines	Information: MADE BY: (TJ), x 4, DELPHI, x 4, without protection hose, COIL ON PLUG, FOR: (TJ)									9.6526 C10		
GLA 250 4-matic	Petrol	155	12/13->	ENGINE M 270.920								
Engine: All engines	Information: MADE BY: (TJ), x 4, DELPHI, x 4, without protection hose, COIL ON PLUG, FOR: (TJ)									9.6526 C10		
GLA 250 Flex	Petrol/ Ethanol	155	01/15->	ENGINE M 270.920								
Engine: All engines	Information: x 4, DELPHI, without protection hose, COIL ON PLUG									9.6526 C10		
GLA 45 AMG 4-matic	Petrol	265	05/14->	ENGINE M 133.980								
Engine: All engines	Information: x 4, DELPHI, without protection hose, COIL ON PLUG									9.6526 C10		
CLASSE GLC												
250 4-matic	Petrol	155	06/15-04/19	ENGINE M 274.920								
Engine: All engines	Information: SA A701/784K, x 4, DELPHI, without protection hose, x 4, COIL ON PLUG, without protection hose, COIL ON PLUG, FOR: (TJ), FOR: (TJ)									9.6526 C10		

A10	CONDENSER	**A20**	CONTACT SET	**A40**	DISTRIBUTOR CAP	**A50**	ROTOR	**A70**	PICK-UP
C10	COIL	**C20**	IGNITION MODULE	**C30**	ELECTRONIC IGNITION KIT	**E01**	IGNITION CABLE SET		

The present application list is a brief version. For the detailed information about the possibility of installation on a specific vehicle, please refer to our web-catalogue http://catalogo.facet.eu/

Vehicle	alim.	kW	Date	Engine	FUNCTIONS ON THE VEHICLE A10	A20	A40	A50	A70	C10 - C30	C20	E01
300 4-matic	Petrol	180	07/15-04/19	M 274.920						9.6526 C10		
All engines	MADE BY: (TJ), SA A701, x 4, DELPHI, MADE BY: (TJ), x 4, without protection hose, x 4, COIL ON PLUG, without protection hose, COIL ON PLUG, FOR: (TJ), FOR: (TJ)											
300 e 4-matic	Petrol/ Electric	155	11/19->	M 274.920						9.6526 C10		
All engines	x 4, DELPHI, without protection hose, COIL ON PLUG, without protection hose, COIL ON PLUG, FOR: (TJ)											
300 e 4-matic	Petrol/ Electric	235	11/19->	M 274.920						9.6526 C10		
All engines	x 4, DELPHI, without protection hose, COIL ON PLUG, without protection hose, COIL ON PLUG, FOR: (TJ)											
350 e 4-matic	Petrol/ Electric	155	01/16-04/19	M 274.920						9.6526 C10		
All engines	SA A701, SA A701/784K, x 4, DELPHI, MADE BY: (TJ), x 4, DELPHI, without protection hose, x 4, COIL ON PLUG, without protection hose, COIL ON PLUG, FOR: (TJ), FOR: (TJ) ---------- x 4, without protection hose, COIL ON PLUG, FOR: (TJ)											
350 e 4-matic	Petrol/ Electric	235	01/16-04/19	M 274.920						9.6526 C10		
All engines	SA A701, SA A701/784K, x 4, DELPHI, MADE BY: (TJ), x 4, DELPHI, without protection hose, x 4, COIL ON PLUG, without protection hose, COIL ON PLUG, FOR: (TJ), FOR: (TJ) ---------- x 4, without protection hose, COIL ON PLUG, FOR: (TJ)											
CLASSE GLK												
200	Petrol	135	08/13-06/15	M 274.920						9.6526 C10		
All engines	MADE BY: (TJ), x 4, DELPHI, x 4, without protection hose, COIL ON PLUG, FOR: (TJ)											
250	Petrol	155	08/13-06/15	M 274.920						9.6526 C10		
All engines	MADE BY: (TJ), x 4, DELPHI, x 4, without protection hose, COIL ON PLUG, FOR: (TJ)											
250 4-matic	Petrol	155	08/13-06/15	M 274.920						9.6526 C10		
All engines	MADE BY: (USA), x 4, DELPHI, x 4, without protection hose, COIL ON PLUG, FOR: (TJ)											
280 4-matic	Petrol	170	06/08-06/09	M 272.948						9.6387 C10		
All engines	x 6, COIL ON PLUG											
300 4-matic	Petrol	170	07/09-12/15	M 272.948						9.6387 C10		
All engines	x 6, COIL ON PLUG											
350	Petrol	200	04/09-06/15	M 272.991						9.6387 C10		
All engines	x 6, COIL ON PLUG											
350 4-matic	Petrol	200	06/08-04/11	M 272.971						9.6387 C10		
All engines	x 6, COIL ON PLUG											

A10	CONDENSER	**A20**	CONTACT SET	**A40**	DISTRIBUTOR CAP	**A50**	ROTOR	**A70**	PICK-UP
C10	COIL	**C20**	IGNITION MODULE	**C30**	ELECTRONIC IGNITION KIT	**E01**	IGNITION CABLE SET		

The present application list is a brief version. For the detailed information about the possibility of installation on a specific vehicle, please refer to our web-catalogue http://catalogo.facet.eu/

Vehicle	alim.	kW	Date	Engine	FUNCTIONS ON THE VEHICLE: A10	A20	A40	A50	A70	C10 - C30	C20	E01

CLASSE M I

ML 230	Petrol	110	02/98-06/05	ENGINE: M 111.977

Engine	Information	A10	A20	A40	A50	A70	C10 - C30	C20	E01
All engines	x 2, SEMI-DIRECT, Dia: 4 mm, connector type, saw teeth						9.6216 C10		

ML 320	Petrol	160	02/98-08/02	ENGINE: M 112.942

Engine	Information	A10	A20	A40	A50	A70	C10 - C30	C20	E01
All engines	x 6, COIL ON PLUG						9.6317 C10		
All engines									4.9649

ML 350	Petrol	173	02/03-06/05	ENGINE: M 112.970

Engine	Information	A10	A20	A40	A50	A70	C10 - C30	C20	E01
All engines	x 6, COIL ON PLUG						9.6317 C10		
All engines									4.9649

ML 350	Petrol	180	08/02-06/05	ENGINE: M 112.970

Engine	Information	A10	A20	A40	A50	A70	C10 - C30	C20	E01
All engines	x 6, COIL ON PLUG						9.6317 C10		
All engines									4.9649

ML 430	Petrol	200	02/98-06/05	ENGINE: M 113.942

Engine	Information	A10	A20	A40	A50	A70	C10 - C30	C20	E01
All engines	x 8, COIL ON PLUG						9.6317 C10		

ML 500	Petrol	215	09/01-06/05	ENGINE: M 113.965

Engine	Information	A10	A20	A40	A50	A70	C10 - C30	C20	E01
All engines	x 8, COIL ON PLUG						9.6317 C10		

ML 55 AMG	Petrol	255	02/00-06/05	ENGINE: M 113.981

Engine	Information	A10	A20	A40	A50	A70	C10 - C30	C20	E01
All engines	x 8, COIL ON PLUG						9.6317 C10		

CLASSE M II

ML 300	Petrol	0	07/09->	ENGINE: M 272.945

Engine	Information	A10	A20	A40	A50	A70	C10 - C30	C20	E01
All engines	Qty: 6						9.6387 C10		

ML 300 4-matic	Petrol	170	03/10-12/11	ENGINE: M 272.945

Engine	Information	A10	A20	A40	A50	A70	C10 - C30	C20	E01
All engines	x 6, COIL ON PLUG						9.6387 C10		

ML 350	Petrol	200	07/05->	ENGINE: M 272.967

Engine	Information	A10	A20	A40	A50	A70	C10 - C30	C20	E01
All engines	Qty: 6						9.6387 C10		

ML 350 4-matic	Petrol	200	02/05-12/11	ENGINE: M 272.967

Engine	Information	A10	A20	A40	A50	A70	C10 - C30	C20	E01
All engines	x 6, COIL ON PLUG						9.6387 C10		

ML 500 4-matic	Petrol	225	07/05-12/11	ENGINE: M 113.964

Engine	Information	A10	A20	A40	A50	A70	C10 - C30	C20	E01
All engines	x 8, COIL ON PLUG						9.6317 C10		

ML 500 4-matic	Petrol	285	12/07-12/11	ENGINE: M 273.963

Engine	Information	A10	A20	A40	A50	A70	C10 - C30	C20	E01
All engines	x 8, COIL ON PLUG						9.6387 C10		

ML 550 4-matic	Petrol	285	12/07->	ENGINE: M 273.963

Engine	Information	A10	A20	A40	A50	A70	C10 - C30	C20	E01
All engines	Qty: 8						9.6387 C10		

A10	CONDENSER	A20	CONTACT SET	A40	DISTRIBUTOR CAP	A50	ROTOR	A70	PICK-UP
C10	COIL	C20	IGNITION MODULE	C30	ELECTRONIC IGNITION KIT	E01	IGNITION CABLE SET		

The present application list is a brief version. For the detailed information about the possibility of installation on a specific vehicle, please refer to our web-catalogue http://catalogo.facet.eu/

Vehicle	alim.	kW	Date	Engine	FUNCTIONS ON THE VEHICLE A10	A20	A40	A50	A70	C10 - C30	C20	E01
CLASSE R												
R 280	Petrol	170	01/07-12/14	ENGINE M 272.945								
Engine: All engines — Information: x 6, COIL ON PLUG										9.6387 C10		
R 280 4-matic	Petrol	170	05/07-12/11	ENGINE M 272.945								
Engine: All engines — Information: x 6, COIL ON PLUG										9.6387 C10		
R 300	Petrol	170	07/09-12/14	ENGINE M 272.945								
Engine: All engines — Information: x 6, COIL ON PLUG										9.6387 C10		
R 300 4-matic	Petrol	170	07/09->	ENGINE M 272.945								
Engine: All engines — Information: Qty: 6										9.6387 C10		
Engine: All engines — Information: x 6, COIL ON PLUG										9.6387 C10		
R 350	Petrol	200	01/07-12/12	ENGINE M 272.967								
Engine: All engines — Information: x 6, COIL ON PLUG										9.6387 C10		
R 350 4-matic	Petrol	200	08/05-12/12	ENGINE M 272.967								
Engine: All engines — Information: x 6, COIL ON PLUG										9.6387 C10		
R 500 4-matic	Petrol	225	08/05-12/14	ENGINE M 113.971								
Engine: All engines — Information: x 8, COIL ON PLUG										9.6317 C10		
R 500 4-matic	Petrol	285	05/07-12/14	ENGINE M 273.963								
Engine: All engines — Information: x 8, COIL ON PLUG										9.6387 C10		
R 550 4-matic	Petrol	285	01/07->	ENGINE M 273.963								
Engine: All engines — Information: Qty: 8										9.6387 C10		
CLASSE S I												
250 S	Petrol	96	01/66-12/69	ENGINE M 108.920								
Engine: All engines — Information:								3.7518RS				
250 SE	Petrol	110	01/66-12/67	ENGINE M 129.980								
Engine: All engines — Information:						1.2521		3.7518RS				
280 S	Petrol	103	10/67-07/72	ENGINE M 130.920								
Engine: All engines — Information:								3.7518RS				
280 S	Petrol	118	08/72-07/80	ENGINE M 110.922								
Engine: All engines — Information:						1.2529HDV						
280 SE, SEL	Petrol	118	01/68-08/72	ENGINE M 130.980								
Engine: All engines — Information:								3.7518RS				

A10	CONDENSER	**A20**	CONTACT SET	**A40**	DISTRIBUTOR CAP	**A50**	ROTOR	**A70**	PICK-UP
C10	COIL	**C20**	IGNITION MODULE	**C30**	ELECTRONIC IGNITION KIT	**E01**	IGNITION CABLE SET		

The present application list is a brief version. For the detailed information about the possibility of installation on a specific vehicle, please refer to our web-catalogue http://catalogo.facet.eu/

Vehicle	alim.	kW	Date	Engine	FUNCTIONS ON THE VEHICLE A10	A20	A40	A50	A70	C10 - C30	C20	E01

CLASSE S II

				ENGINE
260 SE	Petrol	**118**	09/85-06/91	**M 103.941**

Engine	Information	A10	A20	A40	A50	A70	C10 - C30		C20	E01
All engines	version Bosch			2.7530/7PHT	3.7573/25RS					
All engines							9.6078	C10		

				ENGINE
260 SE	Petrol	**122**	09/85-06/91	**M 103.941**

Engine	Information	A10	A20	A40	A50	A70	C10 - C30		C20	E01
All engines	version Bosch			2.7530/7PHT	3.7573/25RS					
All engines							9.6078	C10		

				ENGINE
280 S	Petrol	**115**	12/79-07/85	**M 110.924**

Engine	Information	A10	A20	A40	A50	A70	C10 - C30		C20	E01
All engines	version Bosch			2.7492PHT	3.7534RS					

				ENGINE
280 SE, SEL	Petrol	**136**	10/79-07/85	**M 110.989**

Engine	Information	A10	A20	A40	A50	A70	C10 - C30		C20	E01
All engines	version Bosch			2.7523PHT	3.7560RS					
All engines										4.9323

				ENGINE
300 SE, SEL	Petrol	**132**	01/86-06/91	**M 103.981**

Engine	Information	A10	A20	A40	A50	A70	C10 - C30		C20	E01
All engines	version Bosch			2.7530/7PHT	3.7573/25RS					
All engines							9.6078	C10		

				ENGINE
300 SE, SEL	Petrol	**138**	09/85-12/89	**M 103.981**

Engine	Information	A10	A20	A40	A50	A70	C10 - C30		C20	E01
All engines	version Bosch			2.7530/7PHT	3.7573/25RS					
All engines							9.6078	C10		

				ENGINE
380 SE, SEL	Petrol	**150**	10/81-08/85	**M 116.963**

Engine	Information	A10	A20	A40	A50	A70	C10 - C30		C20	E01
All engines	version Bosch			2.7490PHT	3.7549RS					
All engines							9.6078	C10		

				ENGINE
380 SE, SEL	Petrol	**160**	09/80-10/81	**M 116.961**

Engine	Information	A10	A20	A40	A50	A70	C10 - C30		C20	E01
All engines	version Bosch			2.7490PHT						
All engines	eng. type 01396 ->, version Bosch				3.7523RS					

				ENGINE
380 SEC	Petrol	**150**	10/81-07/85	**M 116.963**

Engine	Information	A10	A20	A40	A50	A70	C10 - C30		C20	E01
All engines	version Bosch			2.7490PHT	3.7549RS					
All engines							9.6078	C10		

				ENGINE
420 SE, SEL	Petrol	**150**	10/85-06/91	**M 116.965**

Engine	Information	A10	A20	A40	A50	A70	C10 - C30		C20	E01
All engines	version Bosch			2.7530/9PHT	3.7573/26RS					
All engines							9.6079	C10		

				ENGINE
420 SE, SEL	Petrol	**160**	10/85-12/87	**M 116.965**

Engine	Information	A10	A20	A40	A50	A70	C10 - C30		C20	E01
All engines	version Bosch			2.7530/9PHT	3.7573/26RS					
All engines							9.6079	C10		

				ENGINE
420 SE, SEL	Petrol	**165**	10/85-06/91	**M 116.965**

Engine	Information	A10	A20	A40	A50	A70	C10 - C30		C20	E01
All engines	version Bosch			2.7530/9PHT	3.7573/26RS					
All engines							9.6079	C10		

A10	CONDENSER	**A20**	CONTACT SET	**A40**	DISTRIBUTOR CAP	**A50**	ROTOR	**A70**	PICK-UP
C10	COIL	**C20**	IGNITION MODULE	**C30**	ELECTRONIC IGNITION KIT	**E01**	IGNITION CABLE SET		

The present application list is a brief version. For the detailed information about the possibility of installation on a specific vehicle, please refer to our web-catalogue http://catalogo.facet.eu/

Vehicle	alim.	kW	Date	Engine	FUNCTIONS ON THE VEHICLE A10	A20	A40	A50	A70	C10 - C30	C20	E01
420 SE, SEL	Petrol	170	10/85-12/87	**M 116.965**								
Engine	Information											
All engines	version Bosch						2.7530/9PHT	3.7573/26RS				
All engines										9.6079 C10		
420 SEC	Petrol	150	10/85-06/91	**M 116.965**								
Engine	Information											
All engines	version Bosch						2.7530/9PHT	3.7573/26RS				
All engines										9.6079 C10		
420 SEC	Petrol	160	10/85-12/87	**M 116.965**								
Engine	Information											
All engines	version Bosch						2.7530/9PHT	3.7573/26RS				
All engines										9.6079 C10		
420 SEC	Petrol	165	10/85-06/91	**M 116.965**								
Engine	Information											
All engines	version Bosch						2.7530/9PHT	3.7573/26RS				
All engines										9.6079 C10		
500 SE, SEL	Petrol	164	09/85-06/91	**M 117.965**								
Engine	Information											
All engines	version Bosch						2.7530/9PHT	3.7573/26RS				
All engines										9.6079 C10		
500 SE, SEL	Petrol	170	12/79-08/85	**M 117.961, M 117.963**								
Engine	Information											
All engines	version Bosch						2.7490PHT					
Eng. M 117.961	version Bosch							3.7523RS				
Eng. M 117.963	version Bosch							3.7549RS				
All engines										9.6078 C10		
500 SE, SEL	Petrol	177	12/79-08/85	**M 117.961, M 117.963**								
Engine	Information											
All engines	version Bosch						2.7490PHT					
Eng. M 117.961	version Bosch							3.7523RS				
Eng. M 117.963	version Bosch							3.7549RS				
All engines										9.6078 C10		
500 SE, SEL	Petrol	180	09/85-06/91	**M 117.965**								
Engine	Information											
All engines	version Bosch						2.7530/9PHT	3.7573/26RS				
All engines										9.6079 C10		
500 SE, SEL	Petrol	185	09/87-06/91	**M 117.965**								
Engine	Information											
All engines	version Bosch						2.7530/9PHT	3.7573/26RS				
All engines										9.6079 C10		
500 SE, SEL	Petrol	195	09/87-06/91	**M 117.965**								
Engine	Information											
All engines	version Bosch						2.7530/9PHT	3.7573/26RS				
All engines										9.6079 C10		
500 SE, SEL Cat	Petrol	185	06/89-06/91	**M 117.965**								
Engine	Information											
All engines	version Bosch						2.7530/9PHT	3.7573/26RS				
All engines										9.6079 C10		

A10	CONDENSER	**A20**	CONTACT SET	**A40**	DISTRIBUTOR CAP	**A50**	ROTOR	**A70**	PICK-UP
C10	COIL	**C20**	IGNITION MODULE	**C30**	ELECTRONIC IGNITION KIT	**E01**	IGNITION CABLE SET		

The present application list is a brief version. For the detailed information about the possibility of installation on a specific vehicle, please refer to our web-catalogue http://catalogo.facet.eu/

Vehicle	alim.	kW	Date	Engine	FUNCTIONS ON THE VEHICLE							
					A10	A20	A40	A50	A70	C10 - C30	C20	E01
500 SEC	Petrol	164	10/85-06/91	M 117.965								
Engine	Information						2.7530/9PHT	3.7573/26RS				
All engines	version Bosch									9.6079 C10		
All engines												
500 SEC	Petrol	170	10/81-08/85	M 117.963								
Engine	Information						2.7490PHT	3.7549RS				
All engines	version Bosch									9.6078 C10		
All engines												
500 SEC	Petrol	177	08/80-08/85	M 117.963								
Engine	Information						2.7490PHT	3.7549RS				
All engines	version Bosch									9.6078 C10		
All engines												
500 SEC	Petrol	180	09/85-06/91	M 117.965								
Engine	Information						2.7530/9PHT	3.7573/26RS				
All engines	version Bosch									9.6079 C10		
All engines												
500 SEC	Petrol	185	08/87-06/91	M 117.965								
Engine	Information						2.7530/9PHT	3.7573/26RS				
All engines	version Bosch									9.6079 C10		
All engines												
500 SEC	Petrol	195	09/85-06/91	M 117.965								
Engine	Information						2.7530/9PHT	3.7573/26RS				
All engines	version Bosch									9.6079 C10		
All engines												
500 SEC Cat	Petrol	185	06/89-06/91	M 117.965								
Engine	Information						2.7530/9PHT	3.7573/26RS				
All engines	version Bosch									9.6079 C10		
All engines												
560 SE, SEL	Petrol	178	10/85-06/91	M 117.968								
Engine	Information						2.7530/9PHT	3.7573/26RS				
All engines	version Bosch									9.6079 C10		
All engines												
560 SE, SEL	Petrol	200	10/85-12/87	M 117.968								
Engine	Information						2.7530/9PHT	3.7573/26RS				
All engines	version Bosch									9.6079 C10		
All engines												
560 SE, SEL	Petrol	205	08/87-06/91	M 117.968								
Engine	Information						2.7530/9PHT	3.7573/26RS				
All engines	version Bosch									9.6079 C10		
All engines												
560 SE, SEL	Petrol	220	10/85-06/91	M 117.968								
Engine	Information						2.7530/9PHT	3.7573/26RS				
All engines	version Bosch									9.6079 C10		
All engines												
560 SEC	Petrol	178	10/85-06/91	M 117.968								
Engine	Information						2.7530/9PHT	3.7573/26RS				
All engines	version Bosch									9.6079 C10		
All engines												

A10	CONDENSER	A20	CONTACT SET	A40	DISTRIBUTOR CAP	A50	ROTOR	A70	PICK-UP
C10	COIL	C20	IGNITION MODULE	C30	ELECTRONIC IGNITION KIT	E01	IGNITION CABLE SET		

The present application list is a brief version. For the detailed information about the possibility of installation on a specific vehicle, please refer to our web-catalogue http://catalogo.facet.eu/

Vehicle	alim.	kW	Date	Engine	FUNCTIONS ON THE VEHICLE A10	A20	A40	A50	A70	C10 - C30	C20	E01
560 SEC	Petrol	200	10/85-12/87	**M 117.968**								
All engines	version Bosch						2.7530/9PHT	3.7573/26RS				
All engines										9.6079	C10	
560 SEC	Petrol	205	10/85-06/91	**M 117.968**								
All engines	version Bosch						2.7530/9PHT	3.7573/26RS				
All engines										9.6079	C10	
560 SEC	Petrol	220	10/85-12/89	**M 117.968**								
All engines	version Bosch						2.7530/9PHT	3.7573/26RS				
All engines										9.6079	C10	
CLASSE S III												
300 SE 2.8	Petrol	145	01/93-10/98	**M 104.944**								
All engines	Qty: 3, without spark plug connector									9.6216	C10	
All engines	incl. spark plug connector, Qty: 3									9.6216K	C10	
300 SE, SEL/S320	Petrol	170	03/91-10/98	**M 104.994**								
All engines	Qty: 3, without spark plug connector									9.6216	C10	
All engines	incl. spark plug connector, Qty: 3									9.6216K	C10	
400 SE, SEL/S420	Petrol	210	02/91-10/98	**M 119.971**								
All engines	Qty: 2, version Bosch							3.7573/46RS				
All engines	->ch. A 006502, Qty: 2, NOT FOR: (USA)									9.6078	C10	
500 SE, SEL	Petrol	240	02/91-10/98	**M 119.970**								
All engines	Qty: 2, version Bosch							3.7573/46RS				
All engines	->ch. A 006502, Qty: 2, NOT FOR: (USA)									9.6078	C10	
500 SEC / CL 500	Petrol	235	10/92-12/99	**M 119.970**								
All engines	Qty: 2, version Bosch							3.7573/46RS				
All engines	->ch. A 006502, Qty: 2, NOT FOR: (USA)									9.6078	C10	
600 SE, SEL	Petrol	300	04/91-12/92	**M 120.980**								
All engines	FP: right									9.6079	C10	
S 280	Petrol	142	02/93-10/98	**M 104.944**								
All engines	Qty: 3, without spark plug connector									9.6216	C10	
All engines	incl. spark plug connector, Qty: 3									9.6216K	C10	
S 420	Petrol	205	01/93-10/98	**M 119.971**								
All engines	Qty: 2, version Bosch							3.7573/46RS				
All engines	->ch. A 006502, Qty: 2, NOT FOR: (USA)									9.6078	C10	
S 500	Petrol	235	01/93-10/98	**M 119.970**								
All engines	Qty: 2, version Bosch							3.7573/46RS				
All engines	->ch. A 006502, Qty: 2, NOT FOR: (USA)									9.6078	C10	

A10	CONDENSER	**A20**	CONTACT SET	**A40**	DISTRIBUTOR CAP	**A50**	ROTOR	**A70**	PICK-UP
C10	COIL	**C20**	IGNITION MODULE	**C30**	ELECTRONIC IGNITION KIT	**E01**	IGNITION CABLE SET		

The present application list is a brief version. For the detailed information about the possibility of installation on a specific vehicle, please refer to our web-catalogue http://catalogo.facet.eu/

Vehicle	alim.	kW	Date	Engine	FUNCTIONS ON THE VEHICLE							
					A10	A20	A40	A50	A70	C10 - C30	C20	E01
S 600	Petrol	290	01/93-10/98	ENGINE M 120.980								
Engine: All engines — Information: FP: right										9.6079 C10		
SEC/CL 420	Petrol	205	10/94-02/99	ENGINE M 119.971								
Engine: All engines — Information: Qty: 2, version Bosch								3.7573/46RS				
Engine: All engines — Information: ->ch. A 006502, Qty: 2, NOT FOR: (USA)										9.6078 C10		
SEC/CL 600	Petrol	290	09/92-02/99	ENGINE M 120.980								
Engine: All engines — Information: FP: right										9.6079 C10		
CLASSE S IV												
S 280	Petrol	150	10/98-08/05	ENGINE M 112.922								
Engine: All engines — Information: x 6, COIL ON PLUG										9.6317 C10		
Engine: All engines — Information:												4.9649
S 320	Petrol	165	10/98-08/05	ENGINE M 112.944								
Engine: All engines — Information: x 6, COIL ON PLUG										9.6317 C10		
Engine: All engines — Information:												4.9649
S 350	Petrol	180	09/02-08/05	ENGINE M 112.972								
Engine: All engines — Information: x 6, COIL ON PLUG										9.6317 C10		
Engine: All engines — Information:												4.9649
S 350 4-matic	Petrol	180	06/03-08/05	ENGINE M 112.975								
Engine: All engines — Information: x 6, COIL ON PLUG										9.6317 C10		
Engine: All engines — Information:												4.9649
S 430	Petrol	205	10/98-08/05	ENGINE M 113.941								
Engine: All engines — Information: x 8, COIL ON PLUG										9.6317 C10		
S 430 4-matic	Petrol	205	09/02-08/05	ENGINE M 113.948								
Engine: All engines — Information: x 8, COIL ON PLUG										9.6317 C10		
S 500	Petrol	220	10/98-12/03	ENGINE M 113.960								
Engine: All engines — Information: x 8, COIL ON PLUG										9.6317 C10		
S 500	Petrol	225	10/98-08/05	ENGINE M 113.960								
Engine: All engines — Information: x 8, COIL ON PLUG										9.6317 C10		
S 500 4-matic	Petrol	225	09/02-08/05	ENGINE M 113.966								
Engine: All engines — Information: x 8, COIL ON PLUG										9.6317 C10		
S 55 AMG	Petrol	265	04/99-08/05	ENGINE M 113.986								
Engine: All engines — Information: x 8, COIL ON PLUG										9.6317 C10		

A10	CONDENSER	**A20**	CONTACT SET	**A40**	DISTRIBUTOR CAP	**A50**	ROTOR	**A70**	PICK-UP
C10	COIL	**C20**	IGNITION MODULE	**C30**	ELECTRONIC IGNITION KIT	**E01**	IGNITION CABLE SET		

The present application list is a brief version. For the detailed information about the possibility of installation on a specific vehicle, please refer to our web-catalogue http://catalogo.facet.eu/

Vehicle	alim.	kW	Date	Engine	FUNCTIONS ON THE VEHICLE A10	A20	A40	A50	A70	C10 - C30	C20	E01
S 55 AMG Kompressor	Petrol	368	06/02-08/05	ENGINE M 113.991								
Engine: All engines	Information: x 8, COIL ON PLUG									9.6317 C10		
CLASSE S V												
CL 550 [JPN]	Petrol	285	06/06->	ENGINE M 273.961								
Engine: All engines	Information: Qty: 8									9.6387 C10		
CL 550 [USA]	Petrol	285	06/06->	ENGINE M 273.961								
Engine: All engines	Information: Qty: 8									9.6387 C10		
CL 550 4-matic [JPN]	Petrol	285	02/08->	ENGINE M 273.968								
Engine: All engines	Information: Qty: 8									9.6387 C10		
CL 550 4-matic [USA]	Petrol	285	02/08->	ENGINE M 273.968								
Engine: All engines	Information: Qty: 8									9.6387 C10		
S 280	Petrol	170	08/06-12/13	ENGINE M 272.946								
Engine: All engines	Information: x 6, COIL ON PLUG									9.6387 C10		
S 300	Petrol	170	08/06-12/13	ENGINE M 272.946								
Engine: All engines	Information: x 6, COIL ON PLUG									9.6387 C10		
S 350	Petrol	200	10/05-12/13	ENGINE M 272.965								
Engine: All engines	Information: x 6, COIL ON PLUG									9.6387 C10		
S 350 4-matic	Petrol	200	02/08-12/13	ENGINE M 272.975								
Engine: All engines	Information: x 6, COIL ON PLUG									9.6387 C10		
S 400 Hybrid	Petrol/ Electric	205	01/09-12/13	ENGINE M 272.974								
Engine: All engines	Information: x 6, COIL ON PLUG									9.6387 C10		
S 450	Petrol	250	12/05-12/13	ENGINE M 273.922								
Engine: All engines	Information: x 8, COIL ON PLUG									9.6387 C10		
S 450 4-matic	Petrol	250	12/05-12/13	ENGINE M 273.924								
Engine: All engines	Information: x 8, COIL ON PLUG									9.6387 C10		
S 500	Petrol	285	10/05-12/13	ENGINE M 273.961								
Engine: All engines	Information: x 8, COIL ON PLUG									9.6387 C10		
S 500 4-matic	Petrol	285	10/05-12/13	ENGINE M 273.968								
Engine: All engines	Information: x 8, COIL ON PLUG									9.6387 C10		

A10	CONDENSER	A20	CONTACT SET	A40	DISTRIBUTOR CAP	A50	ROTOR	A70	PICK-UP
C10	COIL	C20	IGNITION MODULE	C30	ELECTRONIC IGNITION KIT	E01	IGNITION CABLE SET		

The present application list is a brief version. For the detailed information about the possibility of installation on a specific vehicle, please refer to our web-catalogue http://catalogo.facet.eu/

Vehicle	alim.	kW	Date	Engine	FUNCTIONS ON THE VEHICLE A10	A20	A40	A50	A70	C10 - C30	C20	E01
S 550 [JPN]	Petrol	285	10/05->	**M 273.961**								
All engines	Qty: 8									9.6387 C10		
S 550 [USA]	Petrol	285	10/05->	**M 273.961**								
All engines	Qty: 8									9.6387 C10		
S 550 4-matic [JPN]	Petrol	285	10/05->	**M 273.968**								
All engines	Qty: 8									9.6387 C10		
S 550 4-matic [USA]	Petrol	285	10/05->	**M 273.968**								
All engines	Qty: 8									9.6387 C10		
CLASSE SL I												
190 SL	Petrol	77	01/55-12/63	**M 121.921, M 121.928**								
All engines						1.2529HDV	2.7462	3.7518RS				
CLASSE SL III												
280 SL	Petrol	130	06/76-09/81	**M 110.986**								
All engines	version Bosch						2.7492PHT	3.7534RS				
280 SLC	Petrol	130	06/76-09/81	**M 110.986**								
All engines	version Bosch						2.7492PHT	3.7534RS				
300 SL	Petrol	132	09/85-08/89	**M 103.982**								
All engines						1.2521				9.6078 C10		4.9657
All engines	version Bosch						2.7530/7PHT	3.7573/25RS				
300 SL	Petrol	138	09/85-08/89	**M 103.982**								
All engines						1.2521				9.6078 C10		4.9657
All engines	version Bosch						2.7530/7PHT	3.7573/25RS				
380 SL	Petrol	150	09/80-08/85	**M 116.962**								
All engines	version Bosch						2.7490PHT	3.7549RS				
380 SL	Petrol	160	09/80-08/81	**M 116.960**								
All engines	version Bosch						2.7490PHT					
All engines	eng. type 00016 ->, version Bosch							3.7523RS				
420 SL	Petrol	150	01/86-08/89	**M 116.964**								
All engines	version Bosch						2.7530/9PHT	3.7573/26RS				
420 SL	Petrol	160	01/86-08/89	**M 116.964**								
All engines	version Bosch						2.7530/9PHT	3.7573/26RS				
500 SL	Petrol	164	01/86-08/89	**M 117.964**								
All engines	version Bosch						2.7530/9PHT	3.7573/26RS				

A10	CONDENSER	**A20**	CONTACT SET	**A40**	DISTRIBUTOR CAP	**A50**	ROTOR	**A70**	PICK-UP
C10	COIL	**C20**	IGNITION MODULE	**C30**	ELECTRONIC IGNITION KIT	**E01**	IGNITION CABLE SET		

The present application list is a brief version. For the detailed information about the possibility of installation on a specific vehicle, please refer to our web-catalogue http://catalogo.facet.eu/

Vehicle	alim.	kW	Date	Engine	FUNCTIONS ON THE VEHICLE A10	A20	A40	A50	A70	C10 - C30	C20	E01
500 SL	Petrol	180	01/86-08/89	**M 117.964**								
All engines	version Bosch						2.7530/9PHT	3.7573/26RS				
560 SL	Petrol	169	09/85-12/89	**M 117.967**								
All engines	version Bosch						2.7530/9PHT	3.7573/26RS				
CLASSE SL IV												
280	Petrol	142	08/93-10/01	**M 104.943**								
All engines	Qty: 3, without spark plug connector									9.6216 C10		
All engines	incl. spark plug connector, Qty: 3									9.6216K C10		
280	Petrol	150	05/98-10/01	**M 112.923**								
All engines	Qty: 6									9.6317 C10		
All engines												4.9649
300 SL	Petrol	140	03/89-08/93	**M 103.984**								
All engines	version Bosch						2.7530/7PHT	3.7573/25RS				
All engines										9.6078 C10		4.9657
320	Petrol	165	05/98-10/01	**M 112.943**								
All engines	Qty: 6									9.6317 C10		
All engines												4.9649
320	Petrol	170	09/93-10/01	**M 104.991**								
All engines	Qty: 3, without spark plug connector									9.6216 C10		
All engines	incl. spark plug connector, Qty: 3									9.6216K C10		
500	Petrol	225	05/98-10/01	**M 113.961**								
All engines	Qty: 8									9.6317 C10		
500	Petrol	235	09/92-10/01	**M 119.972**								
All engines	Qty: 2, version Bosch							3.7573/46RS				
All engines										9.6079 C10		
500 SL	Petrol	240	09/89-08/92	**M 119.960**								
All engines	Qty: 2, version Bosch							3.7573/46RS				
All engines	Qty: 2									9.6078 C10		
600	Petrol	290	07/92-10/01	**M 120.981**								
All engines										9.6079 C10		
600 SL	Petrol	300	02/92-08/94	**M 120.981**								
All engines										9.6079 C10		
CLASSE SL V												
280	Petrol	170	03/08-01/12	**M 272.949**								
All engines	x 6, COIL ON PLUG									9.6387 C10		

A10	CONDENSER	**A20**	CONTACT SET	**A40**	DISTRIBUTOR CAP	**A50**	ROTOR	**A70**	PICK-UP
C10	COIL	**C20**	IGNITION MODULE	**C30**	ELECTRONIC IGNITION KIT	**E01**	IGNITION CABLE SET		

The present application list is a brief version. For the detailed information about the possibility of installation on a specific vehicle, please refer to our web-catalogue http://catalogo.facet.eu/

Vehicle	alim.	kW	Date	Engine	FUNCTIONS ON THE VEHICLE A10	A20	A40	A50	A70	C10 - C30	C20	E01
300	Petrol	170	04/09-01/12	M 272.949								
All engines	x 6, COIL ON PLUG									9.6387 C10		
350	Petrol	180	03/03-01/12	M 112.973								
All engines	x 6, COIL ON PLUG									9.6317 C10		
All engines												4.9649
350	Petrol	200	03/06-01/12	M 272.966								
All engines	x 6, COIL ON PLUG									9.6387 C10		
350	Petrol	232	04/08-01/12	M 272.968								
All engines	x 6, COIL ON PLUG									9.6387 C10		
500	Petrol	225	10/01-01/12	M 113.963								
All engines	x 8, COIL ON PLUG									9.6317 C10		
500	Petrol	285	03/06-01/12	M 273.965								
All engines	x 8, COIL ON PLUG									9.6387 C10		
55 AMG	Petrol	350	10/01-06/02	M 113.992								
All engines	x 8, COIL ON PLUG									9.6317 C10		
55 AMG	Petrol	380	03/06-01/12	M 113.995								
All engines	x 8, COIL ON PLUG									9.6317 C10		
55 AMG Kompressor	Petrol	368	06/02-01/12	M 113.992								
All engines	x 8, COIL ON PLUG									9.6317 C10		
550	Petrol	285	03/06-01/12	M 273.965								
All engines	Qty: 8									9.6387 C10		
CLASSE SLC												
180	Petrol	115	01/16->	M 274.910								
All engines	SA A701, x 4, DELPHI, MADE BY: (TJ), without protection hose, x 4, COIL ON PLUG, without protection hose, COIL ON PLUG, FOR: (TJ)									9.6526 C10		
200	Petrol	135	01/16->	M 274.920								
All engines	SA A701/784K, x 4, DELPHI, MADE BY: (TJ), without protection hose, x 4, COIL ON PLUG, without protection hose, COIL ON PLUG, FOR: (TJ)									9.6526 C10		
300	Petrol	180	01/16->	M 274.920								
All engines	SA A701/784K, x 4, DELPHI, MADE BY: (TJ), without protection hose, x 4, COIL ON PLUG, without protection hose, COIL ON PLUG, FOR: (TJ)									9.6526 C10		

A10	CONDENSER	A20	CONTACT SET	A40	DISTRIBUTOR CAP	A50	ROTOR	A70	PICK-UP
C10	COIL	C20	IGNITION MODULE	C30	ELECTRONIC IGNITION KIT	E01	IGNITION CABLE SET		

The present application list is a brief version. For the detailed information about the possibility of installation on a specific vehicle, please refer to our web-catalogue http://catalogo.facet.eu/

Vehicle	alim.	kW	Date	Engine	FUNCTIONS ON THE VEHICLE A10	A20	A40	A50	A70	C10 - C30	C20	E01
CLASSE SLK I												
				ENGINE								
200	Petrol	100	09/96-03/00	M 111.946								
Engine: All engines	Information: x 2, SEMI-DIRECT, Dia: 4 mm, connector type, saw teeth									9.6216 C10		
				ENGINE								
200 Kompressor	Petrol	141	10/96-03/00	M 111.943								
Engine: All engines	Information: x 2, SEMI-DIRECT, Dia: 4 mm, connector type, saw teeth									9.6216 C10		
				ENGINE								
230 Kompressor	Petrol	142	09/96-03/00	M 111.973								
Engine: All engines	Information: x 2, SEMI-DIRECT, Dia: 4 mm, connector type, saw teeth									9.6216 C10		
				ENGINE								
32 AMG Kompressor	Petrol	260	03/01-04/04	M 112.960								
Engine: All engines	Information: x 6, COIL ON PLUG									9.6317 C10		
Engine: All engines	Information:											4.9649
				ENGINE								
320	Petrol	160	03/00-04/04	M 112.947								
Engine: All engines	Information: x 6, COIL ON PLUG									9.6317 C10		
Engine: All engines	Information:											4.9649
CLASSE SLK II												
				ENGINE								
200 Kompressor	Petrol	120	03/04-02/11	M 271.944								
Engine: All engines	Information: ->eng. 30853899, eng. type 30853900 ->, x 4, COIL ON PLUG									9.6320 C10		
				ENGINE								
200 Kompressor	Petrol	135	01/08-02/11	M 271.954								
Engine: All engines	Information: x 4, COIL ON PLUG									9.6320 C10		
				ENGINE								
280	Petrol	170	01/05-02/11	M 272.942								
Engine: All engines	Information: x 6, COIL ON PLUG									9.6387 C10		
				ENGINE								
300	Petrol	170	04/09-02/11	M 272.942								
Engine: All engines	Information: x 6, COIL ON PLUG									9.6387 C10		
				ENGINE								
350	Petrol	200	06/04-02/11	M 272.963								
Engine: All engines	Information: x 6, COIL ON PLUG									9.6387 C10		
				ENGINE								
350	Petrol	224	01/08-02/11	M 272.969								
Engine: All engines	Information: x 6, COIL ON PLUG									9.6387 C10		
				ENGINE								
55 AMG	Petrol	265	06/04-12/11	M 113.989								
Engine: All engines	Information: x 8, COIL ON PLUG									9.6317 C10		
				ENGINE								
55 AMG	Petrol	294	06/06-02/11	M 113.989								
Engine: All engines	Information: x 8, COIL ON PLUG									9.6317 C10		
CLASSE SLK III												
				ENGINE								
200	Petrol	135	02/11->	M 271.861, M 274.920								
Engine: Eng. M 271.861	Information: x 4, COIL ON PLUG									9.6320 C10		

A10	CONDENSER	**A20**	CONTACT SET	**A40**	DISTRIBUTOR CAP	**A50**	ROTOR	**A70**	PICK-UP
C10	COIL	**C20**	IGNITION MODULE	**C30**	ELECTRONIC IGNITION KIT	**E01**	IGNITION CABLE SET		

The present application list is a brief version. For the detailed information about the possibility of installation on a specific vehicle, please refer to our web-catalogue http://catalogo.facet.eu/

Vehicle	alim.	kW	Date	Engine	FUNCTIONS ON THE VEHICLE							
					A10	A20	A40	A50	A70	C10 - C30	C20	E01
CLASSE SLK III												
200	Petrol	135	02/11->	ENGINE: M 271.861, M 274.920								
Engine: Eng. M 274.920				Information: SA A701/784K, x 4, DELPHI, MADE BY: (TJ), without protection hose, x 4, COIL ON PLUG, without protection hose, COIL ON PLUG, FOR: (TJ)						9.6526 C10		
250	Petrol	150	02/11->	ENGINE: M 271.861								
Engine: All engines				Information: x 4, COIL ON PLUG						9.6320 C10		
300	Petrol	180	07/15->	ENGINE: M 274.920								
Engine: All engines				Information: x 4, DELPHI, without protection hose, COIL ON PLUG, without protection hose, COIL ON PLUG, FOR: (TJ)						9.6526 C10		
CLASSE V												
V 200	Petrol	95	02/97-07/03	ENGINE: M 111.948, M 111.950								
Engine: All engines				Information: x 2, SEMI-DIRECT, Dia: 4 mm, connector type, saw teeth						9.6216 C10		
V 230	Petrol	105	10/96-07/03	ENGINE: M 111.978, M 111.980								
Engine: All engines				Information: x 2, SEMI-DIRECT, Dia: 4 mm, connector type, saw teeth						9.6216 C10		
COUPE												
220 SEB	Petrol	88	01/61-12/65	ENGINE: M 127.984								
Engine: All engines				Information:				3.7518RS				
250 SE	Petrol	110	01/65-12/67	ENGINE: M 129.980, M 129.981								
Engine: All engines				Information:		1.2521		3.7518RS				
280 SE	Petrol	118	01/67-12/71	ENGINE: M 130.980, M 130.984								
Engine: All engines				Information:		1.2521		3.7521RS				
GLE												
GLE 350 e 4-matic	Petrol/ Electric	155	06/20->	ENGINE: M 274.920								
Engine: All engines				Information: SA A701/784K, x 4, DELPHI, x 4, without protection hose, COIL ON PLUG, FOR: (TJ)						9.6526 C10		
GLE 350 e 4-matic	Petrol/ Electric	245	06/20->	ENGINE: M 274.920								
Engine: All engines				Information: SA A701/784K, x 4, DELPHI, x 4, without protection hose, COIL ON PLUG, FOR: (TJ)						9.6526 C10		
HECKFLOSSE												
190 C	Petrol	59	04/61-08/65	ENGINE: M 121.924								
Engine: All engines				Information:		1.2529HDV		3.7518RS				
200	Petrol	61	07/65-02/68	ENGINE: M 121.940								
Engine: All engines				Information:		1.2521, 1.2529HDV		3.7518RS				
200	Petrol	70	07/65-02/68	ENGINE: M 115.926								
Engine: All engines				Information:				3.7518RS				

A10	CONDENSER	A20	CONTACT SET	A40	DISTRIBUTOR CAP	A50	ROTOR	A70	PICK-UP
C10	COIL	C20	IGNITION MODULE	C30	ELECTRONIC IGNITION KIT	E01	IGNITION CABLE SET		

The present application list is a brief version. For the detailed information about the possibility of installation on a specific vehicle, please refer to our web-catalogue http://catalogo.facet.eu/

Vehicle	alim.	kW	Date	Engine	FUNCTIONS ON THE VEHICLE A10	A20	A40	A50	A70	C10 - C30	C20	E01
220 B	Petrol	70	08/59-08/65	**M 180.940**								
All engines								3.7518RS				
220 SB	Petrol	81	08/59-08/65	**M 180.941**								
All engines								3.7518RS				
220 SEB	Petrol	88	08/59-08/65	**M 127.982**								
All engines								3.7518RS				
230	Petrol	77	07/65-02/68	**M 180.945, M 180.949**								
All engines								3.7518RS				
230	Petrol	88	06/66-12/67	**M 180.950**								
All engines								3.7518RS				
230 S	Petrol	88	07/65-01/68	**M 180.947, M 180.950**								
All engines								3.7518RS				

KOMBI I

Vehicle	alim.	kW	Date	Engine	A10	A20	A40	A50	A70	C10 - C30	C20	E01
200 T	Petrol	74	11/80-11/85	**M 102.939**								
All engines (version Bosch)							2.7508PHT	3.7555RS				
All engines										9.6080 C10		
200 T	Petrol	80	11/80-11/85	**M 102.920**								
All engines (version Bosch)							2.7508PHT	3.7555RS				
All engines										9.6080 C10		

KOMBI II

Vehicle	alim.	kW	Date	Engine	A10	A20	A40	A50	A70	C10 - C30	C20	E01
200 T	Petrol	77	01/86-05/90	**M 102.922**								
All engines (-catalytic converter, version Bosch)							2.7508PHT	3.7555RS				
All engines (+catalytic converter, version Bosch)							2.7530/4PHT	3.7573/21RS				
All engines (+catalytic converter)										9.6078 C10		
All engines (-catalytic converter)										9.6080 C10		
All engines												4.9654
200 T	Petrol	80	09/85-08/89	**M 102.922**								
All engines (-catalytic converter, version Bosch)							2.7508PHT	3.7555RS				
All engines (+catalytic converter, version Bosch)							2.7530/4PHT	3.7573/21RS				
All engines (+catalytic converter)										9.6078 C10		
All engines (-catalytic converter)										9.6080 C10		
All engines												4.9654
200 TE	Petrol	100	05/86-06/93	**M 111.940**								
All engines (Qty: 2)										9.6217 C10		
200 TE	Petrol	87	09/88-08/92	**M 102.963**								
All engines (-catalytic converter, version Bosch)							2.7508PHT	3.7555RS				
All engines (+catalytic converter, version Bosch)							2.7530/4PHT	3.7573/21RS				
All engines (+catalytic converter)										9.6078 C10		

A10	CONDENSER	**A20**	CONTACT SET	**A40**	DISTRIBUTOR CAP	**A50**	ROTOR	**A70**	PICK-UP
C10	COIL	**C20**	IGNITION MODULE	**C30**	ELECTRONIC IGNITION KIT	**E01**	IGNITION CABLE SET		

The present application list is a brief version. For the detailed information about the possibility of installation on a specific vehicle, please refer to our web-catalogue http://catalogo.facet.eu/

Vehicle	alim.	kW	Date	Engine	FUNCTIONS ON THE VEHICLE							
					A10	A20	A40	A50	A70	C10 - C30	C20	E01
200 TE	Petrol	87	09/88-08/92	ENGINE M 102.963								
All engines	-catalytic converter									9.6080 C10		
All engines												4.9654
200 TE	Petrol	90	09/88-12/89	ENGINE M 102.962								
All engines	-catalytic converter, version Bosch						2.7508PHT	3.7555RS				
All engines	+catalytic converter, version Bosch						2.7530/4PHT	3.7573/21RS				
All engines	+catalytic converter									9.6078 C10		
All engines	-catalytic converter									9.6080 C10		
All engines	01/01/90 ->											4.9300
220 TE	Petrol	110	10/92-05/93	ENGINE M 111.960								
All engines	Qty: 2									9.6217 C10		
230 E Chassis	Petrol	97	09/86-06/93	ENGINE M 102.982								
All engines	-catalytic converter, version Bosch						2.7508PHT	3.7555RS				
All engines	+catalytic converter, version Bosch						2.7530/4PHT	3.7573/21RS				
All engines	+catalytic converter									9.6078 C10		
All engines	-catalytic converter									9.6080 C10		
All engines												4.9654
230 TE	Petrol	100	09/85-08/92	ENGINE M 102.982								
All engines	-catalytic converter, version Bosch						2.7508PHT	3.7555RS				
All engines	+catalytic converter, version Bosch						2.7530/4PHT	3.7573/21RS				
All engines	+catalytic converter									9.6078 C10		
All engines	-catalytic converter									9.6080 C10		
All engines												4.9654
230 TE	Petrol	97	09/85-08/92	ENGINE M 102.982								
All engines	-catalytic converter, version Bosch						2.7508PHT	3.7555RS				
All engines	+catalytic converter, version Bosch						2.7530/4PHT	3.7573/21RS				
All engines	+catalytic converter									9.6078 C10		
All engines	-catalytic converter									9.6080 C10		
All engines												4.9654
230 TE Cat	Petrol	97	06/89-08/92	ENGINE M 102.982								
All engines	-catalytic converter, version Bosch						2.7508PHT	3.7555RS				
All engines	+catalytic converter, version Bosch						2.7530/4PHT	3.7573/21RS				
All engines	+catalytic converter									9.6078 C10		
All engines	-catalytic converter									9.6080 C10		
All engines												4.9654
260 TE FGST.	Petrol	118	09/89-08/92	ENGINE M 103.940								
All engines	version Bosch						2.7530/7PHT	3.7573/25RS				
All engines										9.6078 C10		
280 TE	Petrol	145	10/92-06/93	ENGINE M 104.942								
All engines	Qty: 3, without spark plug connector									9.6216 C10		
All engines	incl. spark plug connector, Qty: 3									9.6216K C10		

A10	CONDENSER	**A20**	CONTACT SET	**A40**	DISTRIBUTOR CAP	**A50**	ROTOR	**A70**	PICK-UP
C10	COIL	**C20**	IGNITION MODULE	**C30**	ELECTRONIC IGNITION KIT	**E01**	IGNITION CABLE SET		

The present application list is a brief version. For the detailed information about the possibility of installation on a specific vehicle, please refer to our web-catalogue http://catalogo.facet.eu/

Vehicle	alim.	kW	Date	Engine	FUNCTIONS ON THE VEHICLE A10	A20	A40	A50	A70	C10 - C30	C20	E01
300 TE	Petrol	132	01/86-08/92	**M 103.983**								
All engines	version Bosch						2.7530/7PHT	3.7573/25RS				
All engines										9.6078 C10		4.9657
300 TE 4-matic	Petrol	132	09/86-06/93	**M 103.985**								
All engines	version Bosch						2.7530/7PHT	3.7573/25RS				
All engines										9.6078 C10		4.9657
300 TE-24	Petrol	162	09/89-08/92	**M 104.980**								
All engines										9.6079 C10		
300 TE-24	Petrol	170	09/89-08/92	**M 104.980**								
All engines										9.6079 C10		
320 TE	Petrol	162	10/92-06/93	**M 104.992**								
All engines	Qty: 3, without spark plug connector									9.6216 C10		
All engines	incl. spark plug connector, Qty: 3									9.6216K C10		
O 309												
O 309		63	01/68-02/89	**M 115.921**								
All engines	->year 197212									9.6001D C10		
O 309		66	01/68-02/89	**M 115.952**								
All engines	->year 198208						2.7479PHT	3.7525RS		9.6001D C10		
O 309		70	01/68-02/89	**M 102.943**								
All engines							2.7508PHT	3.7555RS		9.6080 C10		
PAGODE												
230 SL	Petrol	110	01/63-01/67	**M 127.981**								
All engines								3.7518RS				
250 SL	Petrol	110	01/66-01/68	**M 129.982**								
All engines						1.2521		3.7518RS				
280 SL	Petrol	125	01/68-03/71	**M 130.983**								
All engines								3.7518RS				
PONTON												
190 b	Petrol	59	06/59-12/61	**M 121.920**								
All engines						1.2529HDV						
220	Petrol	63	01/54-12/56	**M 180.921**								
All engines								3.7518RS				

A10	CONDENSER	**A20**	CONTACT SET	**A40**	DISTRIBUTOR CAP	**A50**	ROTOR	**A70**	PICK-UP
C10	COIL	**C20**	IGNITION MODULE	**C30**	ELECTRONIC IGNITION KIT	**E01**	IGNITION CABLE SET		

The present application list is a brief version. For the detailed information about the possibility of installation on a specific vehicle, please refer to our web-catalogue http://catalogo.facet.eu/

Vehicle	alim.	kW	Date	Engine	FUNCTIONS ON THE VEHICLE: A10	A20	A40	A50	A70	C10 - C30	C20	E01
220 S	Petrol	78	01/56-12/59	ENGINE: M 180.924								
Engine: All engines	Information:							3.7518RS				
SLR MCLAREN												
5.4	Petrol	460	04/04->	ENGINE: M 155.980								
Engine: All engines	Information: x 8, COIL ON PLUG									9.6317 C10		
5.4	Petrol	478	10/06->	ENGINE: M 155.980								
Engine: All engines	Information: x 8, COIL ON PLUG									9.6317 C10		
5.4 722 Edition	Petrol	478	10/06->	ENGINE: M 155.980								
Engine: All engines	Information: x 8, COIL ON PLUG									9.6317 C10		
5.5	Petrol	460	09/04->	ENGINE: M 155.980								
Engine: All engines	Information: x 8, COIL ON PLUG									9.6317 C10		
5.5 SLR McLaren	Petrol	460	04/07-12/09	ENGINE: M 155.980								
Engine: All engines	Information: x 8, COIL ON PLUG									9.6317 C10		
SPRINTER I												
214	Petrol	105	02/95-05/06	ENGINE: M 111.979, M 111.984								
Engine: All engines	Information: x 2, SEMI-DIRECT, Dia: 4 mm, connector type, saw teeth									9.6216 C10		
214 NGT	Petrol/ Compressed Natural Gas (CNG)	95	02/95-05/06	ENGINE: M 111.984, M 111979NGT, M 111984NGT								
Engine: Eng. M 111.984	Information: Qty: 2, without spark plug connector									9.6216 C10		
Engine: Eng. M 111979NGT, M 111984NGT	Information: x 2, SEMI-DIRECT, Dia: 4 mm, connector type, saw teeth									9.6216 C10		
Engine: Eng. M 111.984	Information: incl. spark plug connector, Qty: 2									9.6216K C10		
314	Petrol	105	02/95-05/06	ENGINE: M 111.979, M 111.984								
Engine: All engines	Information: x 2, SEMI-DIRECT, Dia: 4 mm, connector type, saw teeth									9.6216 C10		
314 4x4	Petrol	105	08/02-05/06	ENGINE: M 111.984								
Engine: All engines	Information: x 2, SEMI-DIRECT, Dia: 4 mm, connector type, saw teeth									9.6216 C10		
314 NGT	Petrol/ Compressed Natural Gas (CNG)	95	02/95-05/06	ENGINE: M 111.984, M 111979NGT, M 111984NGT								
Engine: Eng. M 111.984	Information: Qty: 2, without spark plug connector									9.6216 C10		
Engine: Eng. M 111979NGT, M 111984NGT	Information: x 2, SEMI-DIRECT, Dia: 4 mm, connector type, saw teeth									9.6216 C10		
Engine: Eng. M 111.984	Information: incl. spark plug connector, Qty: 2									9.6216K C10		
414	Petrol	105	02/95-05/06	ENGINE: M 111.979, M 111.984								
Engine: All engines	Information: x 2, SEMI-DIRECT, Dia: 4 mm, connector type, saw teeth									9.6216 C10		

A10	CONDENSER	**A20**	CONTACT SET	**A40**	DISTRIBUTOR CAP	**A50**	ROTOR	**A70**	PICK-UP		
C10	COIL	**C20**	IGNITION MODULE	**C30**	ELECTRONIC IGNITION KIT	**E01**	IGNITION CABLE SET				

The present application list is a brief version. For the detailed information about the possibility of installation on a specific vehicle, please refer to our web-catalogue http://catalogo.facet.eu/

Vehicle	alim.	kW	Date	Engine	FUNCTIONS ON THE VEHICLE A10	A20	A40	A50	A70	C10 - C30	C20	E01
414	Petrol	105	02/95-05/06	ENGINE M 111.979, M 111.984								
Engine	Information											
Eng. M 111.979	Qty: 2, without spark plug connector									9.6216 C10		
Eng. M 111.979	incl. spark plug connector, Qty: 2									9.6216K C10		
414 4x4	Petrol	105	05/97-05/06	ENGINE M 111.979, M 111.984								
Engine	Information											
Eng. M 111.979	Qty: 2, without spark plug connector									9.6216 C10		
Eng. M 111.984	x 2, SEMI-DIRECT, Dia: 4 mm, connector type, saw teeth									9.6216 C10		
Eng. M 111.979	incl. spark plug connector, Qty: 2									9.6216K C10		
414 NGT	Petrol/ Compressed Natural Gas (CNG)	95	02/95-05/06	ENGINE M 111.979, M 111.984, M 111979NGT, M 111984NGT								
Engine	Information											
All engines	x 2, SEMI-DIRECT, Dia: 4 mm, connector type, saw teeth									9.6216 C10		
SPRINTER II												
216	Petrol	115	09/08->	ENGINE M 271.951								
Engine	Information											
All engines	x 4, COIL ON PLUG									9.6320 C10		
224	Petrol	190	06/06->	ENGINE M 272.979								
Engine	Information											
All engines	x 6, COIL ON PLUG									9.6387 C10		
316	Petrol	115	09/08->	ENGINE M 271.951								
Engine	Information											
All engines	x 4, COIL ON PLUG									9.6320 C10		
316 LGT	Petrol/ Liquified Petroleum Gas (LPG)	115	09/08->	ENGINE 271951								
Engine	Information											
All engines	x 4, COIL ON PLUG									9.6320 C10		
316 NGT	Petrol/ Compressed Natural Gas (CNG)	115	09/08->	ENGINE M 271.951, M 271951NGT								
Engine	Information											
Eng. M 271.951	Qty: 4									9.6320 C10		
Eng. M 271951NGT	x 4, COIL ON PLUG									9.6320 C10		
324	Petrol	190	06/06-12/13	ENGINE M 272.979								
Engine	Information											
All engines	x 6, COIL ON PLUG									9.6387 C10		
424	Petrol	190	06/06-12/13	ENGINE M 272.979								
Engine	Information											
All engines	x 6, COIL ON PLUG									9.6387 C10		
516	Petrol	115	09/08->	ENGINE M 271.951								
Engine	Information											
All engines	x 4, COIL ON PLUG									9.6320 C10		

A10	CONDENSER	A20	CONTACT SET	A40	DISTRIBUTOR CAP	A50	ROTOR	A70	PICK-UP
C10	COIL	C20	IGNITION MODULE	C30	ELECTRONIC IGNITION KIT	E01	IGNITION CABLE SET		

The present application list is a brief version. For the detailed information about the possibility of installation on a specific vehicle, please refer to our web-catalogue http://catalogo.facet.eu/

Vehicle	alim.	kW	Date	Engine	FUNCTIONS ON THE VEHICLE A10	A20	A40	A50	A70	C10 - C30	C20	E01
516 NGT	Petrol/ Com-pressed Natural Gas (CNG)	115	09/08->	**M 271.951, M 271951NGT**								

Engine	Information	A10	A20	A40	A50	A70	C10 - C30	C20	E01
Eng. M 271.951	Qty: 4						9.6320 C10		
Eng. M 271951NGT	x 4, COIL ON PLUG						9.6320 C10		

524	Petrol	190	06/06-12/13	**M 272.979**

Engine	Information	A10	A20	A40	A50	A70	C10 - C30	C20	E01
All engines	x 6, COIL ON PLUG						9.6387 C10		

T1

210 2.3	Petrol	70	04/77-02/96	**M 102.942**

Engine	Information	A10	A20	A40	A50	A70	C10 - C30	C20	E01
All engines	version Bosch			2.7508PHT	3.7555RS				
All engines	ch. 240088 ->						9.6080 C10		
All engines									4.9654

210 2.3	Petrol	77	05/89-02/96	**M 102.945**

Engine	Information	A10	A20	A40	A50	A70	C10 - C30	C20	E01
All engines	version Bosch			2.7508PHT	3.7555RS				
All engines	ch. 240088 ->						9.6080 C10		
All engines									4.9654

310 2.3	Petrol	70	08/82-02/96	**M 102.942**

Engine	Information	A10	A20	A40	A50	A70	C10 - C30	C20	E01
All engines	version Bosch			2.7508PHT	3.7555RS				
All engines	ch. 240088 ->						9.6080 C10		
All engines									4.9654

310 2.3	Petrol	77	10/87-12/95	**M 102.945**

Engine	Information	A10	A20	A40	A50	A70	C10 - C30	C20	E01
All engines	version Bosch			2.7508PHT	3.7555RS				
All engines	ch. 240088 ->						9.6080 C10		
All engines									4.9654

410 2.3	Petrol	70	08/82-06/95	**M 102.942**

Engine	Information	A10	A20	A40	A50	A70	C10 - C30	C20	E01
All engines	version Bosch			2.7508PHT	3.7555RS				
All engines							9.6080 C10		4.9654

410 2.3	Petrol	77	10/87-06/95	**M 102.945**

Engine	Information	A10	A20	A40	A50	A70	C10 - C30	C20	E01
All engines	version Bosch			2.7508PHT	3.7555RS				
All engines							9.6080 C10		4.9654

T2/LN1

510	Petrol	70	04/86-12/94	**M 102.946**

Engine	Information	A10	A20	A40	A50	A70	C10 - C30	C20	E01
All engines	version Bosch			2.7508PHT	3.7555RS				
All engines							9.6080 C10		4.9654

510	Petrol	77	04/86-12/94	**M 102.946**

Engine	Information	A10	A20	A40	A50	A70	C10 - C30	C20	E01
All engines	version Bosch			2.7508PHT	3.7555RS				
All engines							9.6080 C10		4.9654

A10	CONDENSER	**A20**	CONTACT SET	**A40**	DISTRIBUTOR CAP	**A50**	ROTOR	**A70**	PICK-UP
C10	COIL	**C20**	IGNITION MODULE	**C30**	ELECTRONIC IGNITION KIT	**E01**	IGNITION CABLE SET		

The present application list is a brief version. For the detailed information about the possibility of installation on a specific vehicle, please refer to our web-catalogue http://catalogo.facet.eu/

Vehicle	alim.	kW	Date	Engine	FUNCTIONS ON THE VEHICLE A10	A20	A40	A50	A70	C10 - C30	C20	E01

TRE VOLUMI I

				ENGINE
280 E	Petrol	**136**	02/76-11/85	**M 110.984, M 110.988**

Engine	Information	A10	A20	A40	A50	A70	C10 - C30		C20	E01
Eng. M 110.984	version Bosch			2.7492PHT						
Eng. M 110.988	version Bosch			2.7523PHT	3.7560RS					
Eng. M 110.984	eng. type 026112, 084886 ->, version Bosch				3.7524RS					
Eng. M 110.984	->eng. 026111, 084885, version Bosch				3.7534RS					
All engines	ext. thread M6 - M5 mm						9.6080	C10		
Eng. M 110.988										4.9323

TRE VOLUMI II

				ENGINE
200	Petrol	**75**	01/86-05/90	**M 102.922**

Engine	Information	A10	A20	A40	A50	A70	C10 - C30		C20	E01
All engines	-catalytic converter, version Bosch			2.7508PHT	3.7555RS					
All engines	+catalytic converter, version Bosch			2.7530/4PHT	3.7573/21RS					
All engines	+catalytic converter						9.6078	C10		
All engines	-catalytic converter						9.6080	C10		
All engines										4.9654

				ENGINE
200	Petrol	**77**	01/86-10/92	**M 102.922**

Engine	Information	A10	A20	A40	A50	A70	C10 - C30		C20	E01
All engines	-catalytic converter, version Bosch			2.7508PHT	3.7555RS					
All engines	+catalytic converter, version Bosch			2.7530/4PHT	3.7573/21RS					
All engines	+catalytic converter						9.6078	C10		
All engines	-catalytic converter						9.6080	C10		
All engines										4.9654

				ENGINE
200	Petrol	**80**	12/85-05/90	**M 102.922**

Engine	Information	A10	A20	A40	A50	A70	C10 - C30		C20	E01
All engines	-catalytic converter, version Bosch			2.7508PHT	3.7555RS					
All engines	+catalytic converter, version Bosch			2.7530/4PHT	3.7573/21RS					
All engines	+catalytic converter						9.6078	C10		
All engines	-catalytic converter						9.6080	C10		
All engines										4.9654

				ENGINE
200 E	Petrol	**100**	10/92-06/93	**M 111.940**

Engine	Information	A10	A20	A40	A50	A70	C10 - C30		C20	E01
All engines	Qty: 2						9.6217	C10		

				ENGINE
200 E	Petrol	**87**	09/88-08/93	**M 102.963**

Engine	Information	A10	A20	A40	A50	A70	C10 - C30		C20	E01
All engines	-catalytic converter, version Bosch			2.7508PHT	3.7555RS					
All engines	+catalytic converter, version Bosch			2.7530/4PHT	3.7573/21RS					
All engines	+catalytic converter						9.6078	C10		
All engines	-catalytic converter						9.6080	C10		
All engines										4.9654

				ENGINE
200 E	Petrol	**90**	09/88-12/89	**M 102.963**

Engine	Information	A10	A20	A40	A50	A70	C10 - C30		C20	E01
All engines	-catalytic converter, version Bosch			2.7508PHT	3.7555RS					
All engines	+catalytic converter, version Bosch			2.7530/4PHT	3.7573/21RS					
All engines	+catalytic converter						9.6078	C10		
All engines	-catalytic converter						9.6080	C10		
All engines										4.9654

				ENGINE
220 E	Petrol	**110**	10/92-06/93	**M 111.960**

Engine	Information	A10	A20	A40	A50	A70	C10 - C30		C20	E01
All engines	Qty: 2						9.6217	C10		

				ENGINE
230 E	Petrol	**100**	01/85-06/93	**M 102.982**

Engine	Information	A10	A20	A40	A50	A70	C10 - C30		C20	E01
All engines	-catalytic converter, version Bosch			2.7508PHT	3.7555RS					

A10	CONDENSER	**A20**	CONTACT SET	**A40**	DISTRIBUTOR CAP	**A50**	ROTOR	**A70**	PICK-UP
C10	COIL	**C20**	IGNITION MODULE	**C30**	ELECTRONIC IGNITION KIT	**E01**	IGNITION CABLE SET		

The present application list is a brief version. For the detailed information about the possibility of installation on a specific vehicle, please refer to our web-catalogue http://catalogo.facet.eu/

Vehicle	alim.	kW	Date	Engine	FUNCTIONS ON THE VEHICLE A10	A20	A40	A50	A70	C10 - C30	C20	E01
230 E	Petrol	100	01/85-06/93	**M 102.982**								

Engine	Information	A10	A20	A40	A50	A70	C10 - C30		C20	E01
All engines	+catalytic converter, version Bosch			2.7530/4PHT	3.7573/21RS					
All engines	+catalytic converter						9.6078	C10		
All engines	-catalytic converter						9.6080	C10		
All engines										4.9654

230 E	Petrol	97	12/84-03/92	**M 102.982**

Engine	Information	A10	A20	A40	A50	A70	C10 - C30		C20	E01
All engines	-catalytic converter, version Bosch			2.7508PHT	3.7555RS					
All engines	+catalytic converter, version Bosch			2.7530/4PHT	3.7573/21RS					
All engines	+catalytic converter						9.6078	C10		
All engines	-catalytic converter						9.6080	C10		
All engines										4.9654

230 E Cat	Petrol	97	06/89-06/93	**M 102.982**

Engine	Information	A10	A20	A40	A50	A70	C10 - C30		C20	E01
All engines	-catalytic converter, version Bosch			2.7508PHT	3.7555RS					
All engines	+catalytic converter, version Bosch			2.7530/4PHT	3.7573/21RS					
All engines	+catalytic converter						9.6078	C10		
All engines	-catalytic converter						9.6080	C10		
All engines										4.9654

260 E	Petrol	118	09/85-08/92	**M 103.940**

Engine	Information	A10	A20	A40	A50	A70	C10 - C30		C20	E01
All engines	version Bosch			2.7530/7PHT	3.7573/25RS					
All engines							9.6078	C10		4.9657

260 E	Petrol	122	09/85-12/89	**M 103.940**

Engine	Information	A10	A20	A40	A50	A70	C10 - C30		C20	E01
All engines	version Bosch			2.7530/7PHT	3.7573/25RS					
All engines							9.6078	C10		4.9657

260 E 4-matic	Petrol	118	09/86-08/92	**M 103.943**

Engine	Information	A10	A20	A40	A50	A70	C10 - C30		C20	E01
All engines	version Bosch			2.7530/7PHT	3.7573/25RS					
All engines							9.6078	C10		4.9657

280 E	Petrol	145	10/92-06/93	**M 104.942**

Engine	Information	A10	A20	A40	A50	A70	C10 - C30		C20	E01
All engines	Qty: 3, without spark plug connector						9.6216	C10		
All engines	incl. spark plug connector, Qty: 3						9.6216K	C10		

300 E	Petrol	132	08/85-08/92	**M 103.983**

Engine	Information	A10	A20	A40	A50	A70	C10 - C30		C20	E01
All engines	version Bosch			2.7530/7PHT	3.7573/25RS					
All engines							9.6078	C10		4.9657

300 E	Petrol	138	06/85-08/92	**M 103.983**

Engine	Information	A10	A20	A40	A50	A70	C10 - C30		C20	E01
All engines	version Bosch			2.7530/7PHT	3.7573/25RS					
All engines							9.6078	C10		

300 E 4-matic	Petrol	118	01/86-12/93	**M 103.943**

Engine	Information	A10	A20	A40	A50	A70	C10 - C30		C20	E01
All engines	version Bosch			2.7530/7PHT	3.7573/25RS					
All engines							9.6078	C10		

300 E 4-matic	Petrol	132	09/86-06/93	**M 103.985**

Engine	Information	A10	A20	A40	A50	A70	C10 - C30		C20	E01
All engines	version Bosch			2.7530/7PHT	3.7573/25RS					

A10	CONDENSER	**A20**	CONTACT SET	**A40**	DISTRIBUTOR CAP	**A50**	ROTOR	**A70**	PICK-UP
C10	COIL	**C20**	IGNITION MODULE	**C30**	ELECTRONIC IGNITION KIT	**E01**	IGNITION CABLE SET		

The present application list is a brief version. For the detailed information about the possibility of installation on a specific vehicle, please refer to our web-catalogue http://catalogo.facet.eu/

Vehicle	alim.	kW	Date	Engine	FUNCTIONS ON THE VEHICLE A10	A20	A40	A50	A70	C10 - C30	C20	E01
300 E 4-matic	Petrol	132	09/86-06/93	**M 103.985**								
All engines										9.6078 C10		4.9657
300 E 4-matic	Petrol	138	09/86-02/92	**M 103.983**								
All engines	version Bosch						2.7530/7PHT	3.7573/25RS				
All engines										9.6078 C10		4.9657
300 E-24	Petrol	162	09/88-08/92	**M 104.980**								
All engines										9.6079 C10		
300 E-24	Petrol	170	09/88-08/92	**M 104.980**								
All engines										9.6079 C10		
320 E	Petrol	162	10/92-06/93	**M 104.992**								
All engines	Qty: 3, without spark plug connector									9.6216 C10		
All engines	incl. spark plug connector, Qty: 3									9.6216K C10		
400 E 4.2	Petrol	205	10/92-06/93	**M 119.975**								
All engines	Qty: 2, version Bosch							3.7573/46RS				
All engines	->ch. B 568955, Qty: 2									9.6078 C10		
All engines	ch. B 568956 ->									9.6079 C10		
500 E	Petrol	240	01/91-06/93	**M 119.974**								
All engines	Qty: 2, version Bosch							3.7573/46RS				
All engines	->ch. B 568955, Qty: 2									9.6078 C10		
All engines	ch. B 568956 ->									9.6079 C10		
500 E AMG 6.0	Petrol	275	01/92-06/93	**M 119.974 (AMG 6.0)**								
All engines	Qty: 2, version Bosch							3.7573/46RS				
All engines	->ch. B 568955, Qty: 2									9.6078 C10		
All engines	ch. B 568956 ->									9.6079 C10		
VIANO												
3.2	Petrol	140	09/03->	**M 112.951**								
All engines	x 6, COIL ON PLUG									9.6317 C10		
All engines												4.9649
3.2	Petrol	160	09/03->	**M 112.951**								
All engines	x 6, COIL ON PLUG									9.6317 C10		
All engines												4.9649
3.5	Petrol	190	09/07->	**M 272.978**								
All engines	x 6, COIL ON PLUG									9.6387 C10		
3.7	Petrol	165	06/04-07/07	**M 112.976**								
All engines	x 6, COIL ON PLUG									9.6387 C10		

A10	CONDENSER	**A20**	CONTACT SET	**A40**	DISTRIBUTOR CAP	**A50**	ROTOR	**A70**	PICK-UP
C10	COIL	**C20**	IGNITION MODULE	**C30**	ELECTRONIC IGNITION KIT	**E01**	IGNITION CABLE SET		

The present application list is a brief version. For the detailed information about the possibility of installation on a specific vehicle, please refer to our web-catalogue http://catalogo.facet.eu/

Vehicle	alim.	kW	Date	Engine	FUNCTIONS ON THE VEHICLE							
					A10	A20	A40	A50	A70	C10 - C30	C20	E01
				ENGINE								
3.7	Petrol	170	06/04->	M 112.976								
Engine	Information											
All engines	x 6, COIL ON PLUG									9.6317 C10		
All engines												4.9649
VITO I												
				ENGINE								
113 2.0	Petrol	95	02/96-07/03	M 111.948, M 111.950								
Engine	Information											
All engines	x 2, SEMI-DIRECT, Dia: 4 mm, connector type, saw teeth									9.6216 C10		
				ENGINE								
114 2.3	Petrol	105	12/96-07/03	M 111.978								
Engine	Information											
All engines	x 2, SEMI-DIRECT, Dia: 4 mm, connector type, saw teeth									9.6216 C10		
VITO II												
				ENGINE								
119	Petrol	140	09/03->	M 112.951								
Engine	Information											
All engines	x 6, COIL ON PLUG									9.6317 C10		
All engines												4.9649
				ENGINE								
122	Petrol	160	09/03->	M 112.951								
Engine	Information											
All engines	x 6, COIL ON PLUG									9.6317 C10		
All engines												4.9649
				ENGINE								
123	Petrol	165	06/04-07/08	M 112.976								
Engine	Information											
All engines	x 6, COIL ON PLUG									9.6387 C10		
All engines												4.9649
				ENGINE								
123	Petrol	170	06/04-07/08	M 112.976								
Engine	Information											
All engines	x 6, COIL ON PLUG									9.6317, 9.6387 C10		
All engines												4.9649
				ENGINE								
126	Petrol	190	09/07->	M 272.978								
Engine	Information											
All engines	x 6, COIL ON PLUG									9.6387 C10		

A10	CONDENSER	A20	CONTACT SET	A40	DISTRIBUTOR CAP	A50	ROTOR	A70	PICK-UP
C10	COIL	C20	IGNITION MODULE	C30	ELECTRONIC IGNITION KIT	E01	IGNITION CABLE SET		

The present application list is a brief version. For the detailed information about the possibility of installation on a specific vehicle, please refer to our web-catalogue http://catalogo.facet.eu/

Vehicle	alim.	kW	Date	Engine	FUNCTIONS ON THE VEHICLE							
					A10	A20	A40	A50	A70	C10 - C30	C20	E01
1300 MK.II												
1300	Petrol	52	09/67-09/70	--								
All engines							2.8075	3.8106				
EXPRESS												
1.4	Petrol	76	03/03-05/05	14 K4F								
All engines	x 1, DISTRIBUTOR									9.6274 C10		
MAGNETTE												
1.5	Petrol	45	01/53-05/56	--								
All engines								3.8106				
1.5	Petrol	48	05/56-04/58	--								
All engines								3.8106				
1.6	Petrol	51	03/61-09/68	--								
All engines						1.4683MHDV	2.8075	3.8106				
MG TF												
115	Petrol	85	03/02-12/09	16 K4F								
All engines	->ch. YD522572, version Lucas						2.8093PHT	3.8129RS				
All engines	x 1, DISTRIBUTOR									9.6274 C10		
All engines	->ch. YD522572											4.9888
All engines	ch. YD522573 ->											4.9889
120	Petrol	88	03/02-12/09	18 K4F								
All engines	->ch. YD522572, version Lucas						2.8093PHT	3.8129RS				
All engines	->ch. YD522572											4.9888
All engines	ch. YD522573 ->											4.9889
135	Petrol	100	03/02-12/09	18 K4F								
All engines	->ch. YD522572, version Lucas						2.8093PHT	3.8129RS				
All engines	x 1, DISTRIBUTOR									9.6274 C10		
All engines	->ch. YD522572											4.9888
All engines	ch. YD522573 ->											4.9889
160	Petrol	118	03/02-12/09	18 K4K								
All engines	x 1, DISTRIBUTOR									9.6274 C10		
MG ZR												
105	Petrol	76	06/01-04/05	14 K4F								
All engines	->ch. YD471564, version Lucas						2.8093PHT	3.8129RS				
All engines	x 1, DISTRIBUTOR									9.6274 C10		
All engines	->ch. YD471564											4.9888
All engines	ch. YD471565 ->											4.9889
120	Petrol	86	06/01-04/05	18 K4F								
All engines	->ch. YD471564, version Lucas						2.8093PHT	3.8129RS				
All engines	x 1, DISTRIBUTOR									9.6274 C10		
All engines	->ch. YD471564											4.9888

A10	CONDENSER	**A20**	CONTACT SET	**A40**	DISTRIBUTOR CAP	**A50**	ROTOR	**A70**	PICK-UP
C10	COIL	**C20**	IGNITION MODULE	**C30**	ELECTRONIC IGNITION KIT	**E01**	IGNITION CABLE SET		

The present application list is a brief version. For the detailed information about the possibility of installation on a specific vehicle, please refer to our web-catalogue http://catalogo.facet.eu/

Vehicle	alim.	kW	Date	Engine	FUNCTIONS ON THE VEHICLE A10	A20	A40	A50	A70	C10 - C30	C20	E01
120	Petrol	86	06/01-04/05	18 K4F								
Engine: All engines	Information: ch. YD471565 ->											4.9889
MG ZS												
120	Petrol	86	07/01-10/05	18 K4F								
Engine: All engines												4.9889
180	Petrol	130	07/01-10/05	25 K4F								
Engine: All engines	Information: x 1, LONG, SHORT, BREMI, D.I.S.									9.6313 C10		
MGA												
1.5	Petrol	51	05/55-04/60	--								
Engine: All engines								3.8106				
1.6	Petrol	58	01/58-04/60	--								
Engine: All engines								3.8106				
1.6	Petrol	70	05/60-07/62	--								
Engine: All engines								3.8106				
1.6	Petrol	81	01/58-05/60	--								
Engine: All engines								3.8106				
MGB												
1.8	Petrol	68	05/62-12/80	--								
Engine: All engines						1.4683MHDV	2.8075	3.8106				
1.8	Petrol	70	05/62-12/80	--								
Engine: All engines						1.4683MHDV	2.8075	3.8106				
MGB GT												
1.8	Petrol	68	07/65-11/80	--, 18G								
Engine: All engines						1.4683MHDV	2.8075	3.8106				
1.8	Petrol	70	07/65-11/80	--, 18G								
Engine: All engines						1.4683MHDV	2.8075	3.8106				
MGC												
3.0	Petrol	108	01/67-09/69	--								
Engine: All engines								3.8107				
MGC GT												
3.0	Petrol	108	01/67-09/69	--								
Engine: All engines								3.8107				

A10	CONDENSER	A20	CONTACT SET	A40	DISTRIBUTOR CAP	A50	ROTOR	A70	PICK-UP
C10	COIL	C20	IGNITION MODULE	C30	ELECTRONIC IGNITION KIT	E01	IGNITION CABLE SET		

The present application list is a brief version. For the detailed information about the possibility of installation on a specific vehicle, please refer to our web-catalogue http://catalogo.facet.eu/

Vehicle	alim.	kW	Date	Engine	FUNCTIONS ON THE VEHICLE							
					A10	A20	A40	A50	A70	C10 - C30	C20	E01

MGF

				ENGINE
1.8 i 16V	Petrol	88	03/95-03/02	18 K4F

Engine	Information	A10	A20	A40	A50	A70	C10 - C30	C20	E01
All engines	->ch. YD522572, version Lucas			2.8093PHT	3.8129RS				
All engines	->ch. YD522572								4.9888
All engines	ch. YD522573 ->								4.9889

MGY

				ENGINE
1.3	Petrol	34	01/50-12/51	--

Engine	Information	A10	A20	A40	A50	A70	C10 - C30	C20	E01
All engines					3.8106				

				ENGINE
1.3	Petrol	40	01/50-12/51	--

Engine	Information	A10	A20	A40	A50	A70	C10 - C30	C20	E01
All engines					3.8106				

MIDGET

				ENGINE
1.1	Petrol	41	01/64-12/66	--

Engine	Information	A10	A20	A40	A50	A70	C10 - C30	C20	E01
All engines					3.8106				

				ENGINE
1.3	Petrol	48	01/67-09/74	--

Engine	Information	A10	A20	A40	A50	A70	C10 - C30	C20	E01
All engines					3.8106				

A10	CONDENSER	A20	CONTACT SET	A40	DISTRIBUTOR CAP	A50	ROTOR	A70	PICK-UP
C10	COIL	C20	IGNITION MODULE	C30	ELECTRONIC IGNITION KIT	E01	IGNITION CABLE SET		

The present application list is a brief version. For the detailed information about the possibility of installation on a specific vehicle, please refer to our web-catalogue http://catalogo.facet.eu/

Vehicle	alim.	kW	Date	Engine	FUNCTIONS ON THE VEHICLE							
					A10	A20	A40	A50	A70	C10 - C30	C20	E01
MINI I												
Cooper	Petrol	85	06/01-07/08	**W10 B16 A**								
Engine: All engines	Information:											4.9719
Cooper S	Petrol	120	03/02-11/07	**W11 B16 A**								
Engine: All engines	Information:											4.9719
Cooper S	Petrol	125	07/04-11/07	**W11 B16 A**								
Engine: All engines	Information:											4.9719
John Cooper Works	Petrol	155	07/04-11/07	**W11 B16 A**								
Engine: All engines	Information:											4.9719
One	Petrol	55	04/03-09/06	**W10 B14 A**								
Engine: All engines	Information:											4.9719
One	Petrol	66	06/01-11/07	**W10 B16 A**								
Engine: All engines	Information:											4.9719
Works	Petrol	155	11/03-09/06	**W11 B16 A**								
Engine: All engines	Information:											4.9719
MINI II												
Cooper	Diesel	88	03/09-06/15	**N12 B16 BA**								
Engine: All engines	Information: Qty: 4									9.6375 C10		
Cooper	Petrol	85	09/06-10/16	**N12 B16 A, N16 B16 A**								
Engine: All engines	Information: x 4, DELPHI, x 4, COIL ON PLUG, DELPHI, ELDOR, COIL ON PLUG									9.6375 C10		
Cooper	Petrol	88	10/06-10/16	**N12 B16 A, N16 B16 A**								
Engine: All engines	Information: x 4, DELPHI, ELDOR, COIL ON PLUG									9.6375 C10		
Cooper	Petrol	90	09/09-10/16	**N12 B16 A, N16 B16 A**								
Engine: Eng. N12 B16 A	Information: Qty: 4									9.6375 C10		
Engine: Eng. N16 B16 A	Information: x 4, DELPHI, COIL ON PLUG									9.6375 C10		
Cooper ALL4	Petrol	85	07/13-09/16	**N16 B16 A**								
Engine: All engines	Information: x 4, DELPHI, COIL ON PLUG									9.6375 C10		
Cooper ALL4	Petrol	90	11/12-10/16	**N16 B16 A, N18 B16 A**								
Engine: All engines	Information: x 4, DELPHI, COIL ON PLUG									9.6375 C10		
Cooper S	Petrol	120	10/07-10/16	**N14 B16 A, N14 B16 AB, N18 B16 A**								
Engine: All engines	Information: x 4, DELPHI, COIL ON PLUG									9.6375 C10		

A10	CONDENSER	**A20**	CONTACT SET	**A40**	DISTRIBUTOR CAP	**A50**	ROTOR	**A70**	PICK-UP
C10	COIL	**C20**	IGNITION MODULE	**C30**	ELECTRONIC IGNITION KIT	**E01**	IGNITION CABLE SET		

The present application list is a brief version. For the detailed information about the possibility of installation on a specific vehicle, please refer to our web-catalogue http://catalogo.facet.eu/

Vehicle	alim.	kW	Date	Engine	FUNCTIONS ON THE VEHICLE A10	A20	A40	A50	A70	C10 - C30	C20	E01
Cooper S	Petrol	128	10/06-07/10	**N14 B16 A, N14 B16 AB**								

Engine	Information	A10	A20	A40	A50	A70	C10 - C30		C20	E01
All engines	x 4, DELPHI, COIL ON PLUG						9.6375	C10		
Eng. N14 B16 A	Qty: 4						9.6375	C10		

Vehicle	alim.	kW	Date	Engine
Cooper S	Petrol	135	02/10-10/16	**N18 B16 A**

Engine	Information	A10	A20	A40	A50	A70	C10 - C30		C20	E01
All engines	x 4, DELPHI, COIL ON PLUG						9.6375	C10		

Vehicle	alim.	kW	Date	Engine
Cooper S	Petrol	140	07/14-10/16	**N18 B16 A**

Engine	Information	A10	A20	A40	A50	A70	C10 - C30		C20	E01
All engines	x 4, DELPHI, COIL ON PLUG						9.6375	C10		

Vehicle	alim.	kW	Date	Engine
Cooper S	Petrol	141	04/08-07/10	**N14 B16 AB**

Engine	Information	A10	A20	A40	A50	A70	C10 - C30		C20	E01
All engines	x 4, DELPHI, COIL ON PLUG						9.6375	C10		

Vehicle	alim.	kW	Date	Engine
Cooper S	Petrol	147	02/10-10/16	**N18 B16 A**

Engine	Information	A10	A20	A40	A50	A70	C10 - C30		C20	E01
All engines	x 4, DELPHI, COIL ON PLUG						9.6375	C10		

Vehicle	alim.	kW	Date	Engine
Cooper S ALL4	Petrol	120	08/10-10/16	**N18 B16 A**

Engine	Information	A10	A20	A40	A50	A70	C10 - C30		C20	E01
All engines	x 4, DELPHI, COIL ON PLUG						9.6375	C10		

Vehicle	alim.	kW	Date	Engine
Cooper S ALL4	Petrol	135	08/10-10/16	**N18 B16 A**

Engine	Information	A10	A20	A40	A50	A70	C10 - C30		C20	E01
All engines	x 4, DELPHI, COIL ON PLUG						9.6375	C10		

Vehicle	alim.	kW	Date	Engine
Cooper S ALL4	Petrol	140	03/12-10/16	**N18 B16 A**

Engine	Information	A10	A20	A40	A50	A70	C10 - C30		C20	E01
All engines	x 4, DELPHI, COIL ON PLUG						9.6375	C10		

Vehicle	alim.	kW	Date	Engine
Cooper S JCW	Petrol	147	12/10-04/15	**N18 B16 A**

Engine	Information	A10	A20	A40	A50	A70	C10 - C30		C20	E01
All engines	x 4, DELPHI, COIL ON PLUG						9.6375	C10		

Vehicle	alim.	kW	Date	Engine
Cooper S John Cooper Works	Petrol	141	11/06-02/10	**N14 B16 AB, N14 B16 C**

Engine	Information	A10	A20	A40	A50	A70	C10 - C30		C20	E01
Eng. N14 B16 AB	x 4, DELPHI, COIL ON PLUG						9.6375	C10		
Eng. N14 B16 C	Qty: 4						9.6375	C10		

Vehicle	alim.	kW	Date	Engine
Cooper S John Cooper Works	Petrol	147	01/12-11/13	**N18 B16 A**

Engine	Information	A10	A20	A40	A50	A70	C10 - C30		C20	E01
All engines	x 4, DELPHI, COIL ON PLUG						9.6375	C10		

Vehicle	alim.	kW	Date	Engine
John Cooper Works	Petrol	155	11/07-05/15	**N14 B16 C, N18 B16 C**

Engine	Information	A10	A20	A40	A50	A70	C10 - C30		C20	E01
All engines	x 4, DELPHI, COIL ON PLUG						9.6375	C10		

Vehicle	alim.	kW	Date	Engine
John Cooper Works ALL4	Petrol	160	11/12-10/16	**N18 B16 C**

Engine	Information	A10	A20	A40	A50	A70	C10 - C30		C20	E01
All engines	x 4, DELPHI, COIL ON PLUG						9.6375	C10		

Vehicle	alim.	kW	Date	Engine
John Cooper Works GP	Petrol	160	09/12-11/13	**N14 B16 C, N18 B16 C**

Engine	Information	A10	A20	A40	A50	A70	C10 - C30		C20	E01
All engines	x 4, DELPHI, COIL ON PLUG						9.6375	C10		

A10	CONDENSER	**A20**	CONTACT SET	**A40**	DISTRIBUTOR CAP	**A50**	ROTOR	**A70**	PICK-UP
C10	COIL	**C20**	IGNITION MODULE	**C30**	ELECTRONIC IGNITION KIT	**E01**	IGNITION CABLE SET		

The present application list is a brief version. For the detailed information about the possibility of installation on a specific vehicle, please refer to our web-catalogue http://catalogo.facet.eu/

Vehicle	alim.	kW	Date	Engine	FUNCTIONS ON THE VEHICLE A10	A20	A40	A50	A70	C10 - C30	C20	E01
John Cooper Worls ALL4	Petrol	160	11/12->	N18 B16 C						9.6375 C10		
One	Petrol	55	03/09-11/13	N12 B14 A, N16 B16 A						9.6375 C10		
One	Petrol	70	11/06-03/10	N12 B14 A						9.6375 C10		
One	Petrol	72	09/09-10/16	N16 B16 A						9.6375 C10		
One LPG	Petrol/ Liquified Petro-leum Gas (LPG)	55	03/09-03/10	N12 B14 A						9.6375 C10		
MINI III												
Cooper	Petrol	100	09/13->	B36 A15 A, B38 A15 A, B38 A15 F						9.6532 C10		
Cooper ALL4	Petrol	100	10/16->	B38 A15 A, B38 A15 F						9.6532 C10		
Cooper S	Petrol	120	09/13->	B46 A20 A, B48 A20 A, B48 A20 F						9.6532 C10		
Cooper S	Petrol	131	07/20->	B46 A20 A, B48 A20 A, B48 A20 F						9.6532 C10		
Cooper S	Petrol	141	09/13->	B46 A20 A, B48 A20 A, B48 A20 F						9.6532 C10		
Cooper S ALL4	Petrol	120	04/15->	B46 A20 A, B48 A20 A						9.6532 C10		
Cooper S ALL4	Petrol	131	07/20->	B46 A20 A, B48 A20 A, B48 A20 F						9.6532 C10		
Cooper S ALL4	Petrol	141	04/15->	B46 A20 A, B48 A20 A						9.6532 C10		

Engine	Information	A10	A20	A40	A50	A70	C10 - C30	C20	E01
All engines	Qty: 4						9.6375 C10		
All engines	x 4, DELPHI, ELDOR, COIL ON PLUG						9.6375 C10		
All engines	x 4, DELPHI, ELDOR, COIL ON PLUG						9.6375 C10		
All engines	x 4, DELPHI, COIL ON PLUG						9.6375 C10		
All engines	x 4, DELPHI, ELDOR, COIL ON PLUG						9.6375 C10		
All engines	x 3, COIL ON PLUG						9.6532 C10		
Eng. B36 A15 A	Qty: 3						9.6532 C10		
All engines	x 3, COIL ON PLUG						9.6532 C10		
All engines	x 4, COIL ON PLUG						9.6532 C10		
All engines	x 4, COIL ON PLUG, x 4, COIL ON PLUG						9.6532 C10		
All engines	x 4, COIL ON PLUG						9.6532 C10		
All engines	x 4, COIL ON PLUG						9.6532 C10		
All engines	x 4, COIL ON PLUG						9.6532 C10		
All engines	x 4, COIL ON PLUG						9.6532 C10		

A10	CONDENSER	A20	CONTACT SET	A40	DISTRIBUTOR CAP	A50	ROTOR	A70	PICK-UP
C10	COIL	C20	IGNITION MODULE	C30	ELECTRONIC IGNITION KIT	E01	IGNITION CABLE SET		

The present application list is a brief version. For the detailed information about the possibility of installation on a specific vehicle, please refer to our web-catalogue http://catalogo.facet.eu/

Vehicle	alim.	kW	Date	Engine	FUNCTIONS ON THE VEHICLE							
					A10	A20	A40	A50	A70	C10 - C30	C20	E01
Cooper S JCW	Petrol	155	09/13->	ENGINE: B46 A20 A, B48 A20 A, B48 A20 F								
Engine: All engines	Information: x 4, COIL ON PLUG									9.6532 C10		
Cooper S JCW ALL4	Petrol	155	11/14->	ENGINE: B48 A20 A								
Engine: All engines	Information: x 4, COIL ON PLUG									9.6532 C10		
Cooper SE ALL4	Petrol/ Electric	100	01/17->	ENGINE: B38 A15 A								
Engine: All engines	Information: x 3, COIL ON PLUG									9.6532 C10		
Cooper SE ALL4	Petrol/ Electric	162	07/20->	ENGINE: B38 A15 A								
Engine: All engines	Information: x 3, COIL ON PLUG									9.6532 C10		
Cooper SE ALL4	Petrol/ Electric	165	01/17->	ENGINE: B38 A15 A								
Engine: All engines	Information: x 3, COIL ON PLUG									9.6532 C10		
Cooper SE ALL4	Petrol/ Electric	92	07/20->	ENGINE: B38 A15 A								
Engine: All engines	Information: x 3, COIL ON PLUG									9.6532 C10		
John Cooper Works	Petrol	170	03/15->	ENGINE: B46 A20 B, B48 A20 B								
Engine: All engines	Information: x 4, COIL ON PLUG									9.6532 C10		
John Cooper Works	Petrol	225	07/19->	ENGINE: B48 A20 E								
Engine: All engines	Information: x 4, COIL ON PLUG									9.6532 C10		
John Cooper Works ALL4	Petrol	170	03/17-06/19	ENGINE: B48 A20 B								
Engine: All engines	Information: x 4, COIL ON PLUG									9.6532 C10		
John Cooper Works ALL4	Petrol	225	07/19->	ENGINE: B48 A20 E								
Engine: All engines	Information: x 4, COIL ON PLUG									9.6532 C10		
John Cooper Works GP	Petrol	225	03/20->	ENGINE: B48 A20 E								
Engine: All engines	Information: x 4, COIL ON PLUG									9.6532 C10		
One	Petrol	75	04/14->	ENGINE: B38 A12 A, B38 A15 A								
Engine: All engines	Information: x 3, COIL ON PLUG									9.6532 C10		
One First	Petrol	55	06/14->	ENGINE: B38 A12 A, B38 A15 A								
Engine: All engines	Information: x 3, COIL ON PLUG									9.6532 C10		

A10	CONDENSER	**A20**	CONTACT SET	**A40**	DISTRIBUTOR CAP	**A50**	ROTOR	**A70**	PICK-UP
C10	COIL	**C20**	IGNITION MODULE	**C30**	ELECTRONIC IGNITION KIT	**E01**	IGNITION CABLE SET		

The present application list is a brief version. For the detailed information about the possibility of installation on a specific vehicle, please refer to our web-catalogue http://catalogo.facet.eu/

Vehicle	alim.	kW	Date	Engine	FUNCTIONS ON THE VEHICLE A10	A20	A40	A50	A70	C10 - C30	C20	E01

ASX

				ENGINE
1.6 LPG	Petrol/ Liquified Petro-leum Gas (LPG)	86	06/10->	4A92

Engine	Information	A10	A20	A40	A50	A70	C10 - C30		C20	E01
All engines	x 4, COIL ON PLUG						9.6405	C10		

				ENGINE
1.6 MIVEC	Petrol	85	05/10->	4A92

Engine	Information	A10	A20	A40	A50	A70	C10 - C30		C20	E01
All engines	x 4, COIL ON PLUG						9.6405	C10		

				ENGINE
1.6 MIVEC	Petrol	86	06/10->	4A92

Engine	Information	A10	A20	A40	A50	A70	C10 - C30		C20	E01
All engines	x 4, COIL ON PLUG						9.6405	C10		

				ENGINE
1.8	Petrol	102	02/10->	4B10

Engine	Information	A10	A20	A40	A50	A70	C10 - C30		C20	E01
All engines	x 4, COIL ON PLUG						9.6397	C10		

				ENGINE
1.8 4WD	Petrol	102	02/10->	6B4204T30

Engine	Information	A10	A20	A40	A50	A70	C10 - C30		C20	E01
All engines	Qty: 4						9.6397	C10		

				ENGINE
2.0 i	Petrol	118	06/10->	4B11

Engine	Information	A10	A20	A40	A50	A70	C10 - C30		C20	E01
All engines	Qty: 4						9.6397	C10		

				ENGINE
2.0 i 4WD	Petrol	112	01/10->	4B11

Engine	Information	A10	A20	A40	A50	A70	C10 - C30		C20	E01
All engines	Qty: 4						9.6397	C10		

				ENGINE
2.0 i 4WD	Petrol	114	01/10->	4B11

Engine	Information	A10	A20	A40	A50	A70	C10 - C30		C20	E01
All engines	Qty: 4						9.6397	C10		

				ENGINE
2.0 i 4WD	Petrol	118	06/10->	4B11

Engine	Information	A10	A20	A40	A50	A70	C10 - C30		C20	E01
All engines	Qty: 4						9.6397	C10		

				ENGINE
2.0 MIVEC	Petrol	110	06/10->	4B11, 4J11

Engine	Information	A10	A20	A40	A50	A70	C10 - C30		C20	E01
All engines	x 4, COIL ON PLUG						9.6397	C10		

				ENGINE
2.0 MIVEC 4WD	Petrol	110	06/10->	4B11, 4J11

Engine	Information	A10	A20	A40	A50	A70	C10 - C30		C20	E01
All engines	x 4, COIL ON PLUG						9.6397	C10		

CARISMA

				ENGINE
1.3 16V	Petrol	60	09/00-10/04	4G13 (16V)

Engine	Information	A10	A20	A40	A50	A70	C10 - C30		C20	E01
All engines										4.9883

				ENGINE
1.6	Petrol	66	07/95-06/06	4G92 (SOHC 16V)

Engine	Information	A10	A20	A40	A50	A70	C10 - C30		C20	E01
All engines	->year 30/04/96, version Mitsubishi			2.8322/69	3.8331/36					
All engines	01/05/96 ->									4.9764

A10	CONDENSER	A20	CONTACT SET	A40	DISTRIBUTOR CAP	A50	ROTOR	A70	PICK-UP
C10	COIL	C20	IGNITION MODULE	C30	ELECTRONIC IGNITION KIT	E01	IGNITION CABLE SET		

The present application list is a brief version. For the detailed information about the possibility of installation on a specific vehicle, please refer to our web-catalogue http://catalogo.facet.eu/

Vehicle	alim.	kW	Date	Engine	FUNCTIONS ON THE VEHICLE A10	A20	A40	A50	A70	C10 - C30	C20	E01
1.6	Petrol	70	12/98-06/06	ENGINE 4G92 (SOHC 16V)								
Engine: All engines	Information:											4.9764
1.6	Petrol	73	05/97-06/06	ENGINE 4G92 (SOHC 16V)								
Engine: All engines	Information: 01/05/96 ->											4.9764
1.6	Petrol	76	09/00-06/06	ENGINE 4G92 (SOHC 16V)								
Engine: All engines	Information:											4.9764
1.8	Petrol	85	07/95-09/97	ENGINE 4G93 (SOHC 16V)								
Engine: All engines	Information: ->year 30/04/96, version Mitsubishi						2.8322/69	3.8331/36				
Engine: All engines	Information: 01/05/96 ->											4.9764
COLT I												
1.2 GL	Petrol	40	12/78-01/84	ENGINE 4G11								
Engine: All engines	Information: version Mitsubishi					1.5085	2.8303/1	3.8323				
COLT II												
1.3 EL,GL	Petrol	49	06/86-04/88	ENGINE G13B								
Engine: All engines	Information: version Mitsubishi						2.8303/1	3.8323				
COLT III												
1.3 12V	Petrol	55	04/88-05/92	ENGINE 4G13 (12V)								
Engine: All engines	Information: version Mitsubishi						2.8322/58	3.8331/19				
1.3 GL	Petrol	44	04/88-12/90	ENGINE 4G13 (8V)								
Engine: All engines	Information: ->year 31/05/90, version Mitsubishi						2.8303/1	3.8323				
Engine: All engines	Information: 01/06/90 ->, version Mitsubishi						2.8322/58	3.8331/19				
1.5 Cat	Petrol	66	07/90-05/92	ENGINE 4G15 (12V)								
Engine: All engines	Information: version Mitsubishi						2.8322/34					
1.5 GLXi	Petrol	62	04/88-05/92	ENGINE 4G15 (8V)								
Engine: All engines	Information: version Mitsubishi						2.8303/1	3.8331/7				
1.6 GTi 16V	Petrol	91	04/88-05/90	ENGINE 4G61								
Engine: All engines	Information:											4.9401
1.8 GTi 16V Cat	Petrol	100	06/90-05/92	ENGINE 4G67								
Engine: All engines	Information:											4.9401
COLT IV												
1.3 GLi 12V	Petrol	55	04/92-04/96	ENGINE 4G13 (12V)								
Engine: All engines	Information: version Mitsubishi						2.8322/34					

A10	CONDENSER	A20	CONTACT SET	A40	DISTRIBUTOR CAP	A50	ROTOR	A70	PICK-UP
C10	COIL	C20	IGNITION MODULE	C30	ELECTRONIC IGNITION KIT	E01	IGNITION CABLE SET		

The present application list is a brief version. For the detailed information about the possibility of installation on a specific vehicle, please refer to our web-catalogue http://catalogo.facet.eu/

Vehicle	alim.	kW	Date	Engine	FUNCTIONS ON THE VEHICLE A10	A20	A40	A50	A70	C10 - C30	C20	E01
1.5	Petrol	60	04/92-04/96	4G15								
Engine	Information						2.8322/34, 2.8322/58	3.8331/19				
All engines	version Mitsubishi, no specific info conc. application available											
1.6 4WD	Petrol	84	08/93-08/95	4G92 (SOHC 16V)								
All engines	version Mitsubishi						2.8322/38					
All engines	version Mitsubishi, no specific info conc. application available							3.8331/36, 3.8331/37				
All engines												4.9278
1.6 GLXi 16V	Petrol	83	04/92-04/96	4G92 (SOHC 16V)								
All engines	version Mitsubishi						2.8322/38					
All engines	version Mitsubishi, no specific info conc. application available							3.8331/36, 3.8331/37				
All engines												4.9278
COLT V												
1.3	Petrol	66	08/02-09/03	4G19								
All engines												4.9883
1.5	Petrol	81	09/95-09/03	301353C								
All engines	version Mitsubishi						2.8322/58	3.8331/19				
All engines												4.9753
1.5 16V	Petrol	69	10/99-09/03	301353C								
All engines	version Mitsubishi						2.8322/58	3.8331/19				
All engines												4.9753
1300	Petrol	60	06/00-09/03	4G13 (16V)								
All engines												4.9883
1300 GL,GLX	Petrol	55	05/96-06/00	4G13 (12V)								
All engines	->year 31/05/00, version Mitsubishi						2.8322/68	3.8331/36				
All engines	->year 31/05/00											4.9753
All engines	01/06/00 ->											4.9883
1600	Petrol	76	09/00-09/03	4G92 (SOHC 16V)								
All engines												4.9764
1600 GLX	Petrol	66	05/96-09/00	4G92 (SOHC 16V)								
All engines												4.9764
COLT VI												
1.1	Petrol	55	10/04-06/12	3A91								
All engines	01/07/10 ->, x 3, COIL ON PLUG									9.6405 C10		
1.1 LPG	Petrol/ Liquified Petro-leum Gas (LPG)	55	10/04-06/12	3A91								
All engines	01/07/10 ->, x 3, COIL ON PLUG									9.6405 C10		

A10	CONDENSER	A20	CONTACT SET	A40	DISTRIBUTOR CAP	A50	ROTOR	A70	PICK-UP
C10	COIL	C20	IGNITION MODULE	C30	ELECTRONIC IGNITION KIT	E01	IGNITION CABLE SET		

The present application list is a brief version. For the detailed information about the possibility of installation on a specific vehicle, please refer to our web-catalogue http://catalogo.facet.eu/

Vehicle	alim.	kW	Date	Engine	FUNCTIONS ON THE VEHICLE A10	A20	A40	A50	A70	C10 - C30	C20	E01
1.3	Petrol	68	08/04->	4A90								
All engines	01/07/10 ->, Qty: 4									9.6405 C10		
1.3	Petrol	70	06/04-06/12	4A90								
All engines	01/07/10 ->, x 4, COIL ON PLUG									9.6405 C10		
1.3 4WD	Petrol	67	08/04->	4A90								
All engines	01/07/10 ->, Qty: 4									9.6405 C10		
1.3 LPG	Petrol/ Liquified Petro-leum Gas (LPG)	70	06/04-06/12	4A90								
All engines	01/07/10 ->, x 4, COIL ON PLUG									9.6405 C10		
CORDIA												
1.8 [USA]	Petrol	0	01/82-12/88	G62B								
All engines	version Mitsubishi					1.5085	2.8303/1	3.8323				
1.8 Turbo [USA]	Petrol	0	01/82-12/88	G62B								
All engines	version Mitsubishi					1.5085	2.8303/1	3.8323				
DELICA D5												
2.4 4WD	Petrol	125	06/07->	4B12								
All engines	Qty: 4									9.6397 C10		
ECLIPSE I												
1.8	Petrol	68	12/89-03/94	4G37								
All engines	01/08/90 ->, version Mitsubishi						2.8322/35					
2.0 i 16V	Petrol	110	04/91-11/95	4G63 (DOHC 16V)								
All engines												4.9401
2.0 i 16V 4WD	Petrol	110	04/91-11/95	4G63 (DOHC 16V)								
All engines												4.9401
2.0 Turbo	Petrol	147	12/89-03/94	4G63-T (DOHC 16V)								
All engines												4.9401
2.0 Turbo 4WD	Petrol	157	12/89-03/94	4G63-T (DOHC 16V)								
All engines												4.9401
GALANT IV												
1.6 GLX	Petrol	55	09/80-05/84	4G32								
All engines	version Mitsubishi							3.8331/7				

A10	CONDENSER	**A20**	CONTACT SET	**A40**	DISTRIBUTOR CAP	**A50**	ROTOR	**A70**	PICK-UP
C10	COIL	**C20**	IGNITION MODULE	**C30**	ELECTRONIC IGNITION KIT	**E01**	IGNITION CABLE SET		

The present application list is a brief version. For the detailed information about the possibility of installation on a specific vehicle, please refer to our web-catalogue http://catalogo.facet.eu/

Vehicle	alim.	kW	Date	Engine	FUNCTIONS ON THE VEHICLE A10	A20	A40	A50	A70	C10 - C30	C20	E01

GALANT VI

				ENGINE
1.6	Petrol	55	01/88-10/92	4G32

Engine	Information	A10	A20	A40	A50	A70	C10 - C30	C20	E01
All engines	version Mitsubishi			2.8303/1	3.8323				

				ENGINE
1.8	Petrol	63	11/87-10/92	4G37

Engine	Information	A10	A20	A40	A50	A70	C10 - C30	C20	E01
All engines	fuel formation: carburettor, version Mitsubishi			2.8303/1	3.8323				
All engines	11/05/90 ->, Multi Point Injection (MPI), version Mitsubishi			2.8322/35					

				ENGINE
1.8	Petrol	66	11/87-10/92	4G37

Engine	Information	A10	A20	A40	A50	A70	C10 - C30	C20	E01
All engines	fuel formation: carburettor, version Mitsubishi			2.8303/1	3.8323				
All engines	11/05/90 ->, Multi Point Injection (MPI), version Mitsubishi			2.8322/35					

				ENGINE
2.0	Petrol	77	05/89-12/92	4G63 (SOHC 8V)

Engine	Information	A10	A20	A40	A50	A70	C10 - C30	C20	E01
All engines	->year 31/05/90, version Mitsubishi			2.8303/1	3.8331/7				
All engines	01/06/90 ->, version Mitsubishi			2.8322/31	3.8331/31				

				ENGINE
2.0	Petrol	80	11/87-10/92	4G63 (SOHC 8V)

Engine	Information	A10	A20	A40	A50	A70	C10 - C30	C20	E01
All engines	->year 31/05/90, version Mitsubishi			2.8303/1	3.8331/7				
All engines	01/06/90 ->, version Mitsubishi			2.8322/31	3.8331/31				

				ENGINE
2.0 4WD	Petrol	80	12/88-10/92	4G63 (SOHC 8V)

Engine	Information	A10	A20	A40	A50	A70	C10 - C30	C20	E01
All engines	->year 31/05/90, version Mitsubishi			2.8303/1	3.8331/7				
All engines	01/06/90 ->, version Mitsubishi			2.8322/31	3.8331/31				

				ENGINE
2.0 GTi 16V	Petrol	106	11/87-10/92	4G63 (DOHC 16V)

Engine	Information	A10	A20	A40	A50	A70	C10 - C30	C20	E01
All engines									4.9401

				ENGINE
2.0 GTI 16V	Petrol	107	11/88-10/92	4G63 (DOHC 16V)

Engine	Information	A10	A20	A40	A50	A70	C10 - C30	C20	E01
All engines									4.9401

				ENGINE
2.0 GTi 16V 4WD	Petrol	106	06/88-10/92	4G63 (DOHC 16V)

Engine	Information	A10	A20	A40	A50	A70	C10 - C30	C20	E01
All engines	->year 31/05/91								4.9401

				ENGINE
2.0 GTI 16V 4x4	Petrol	106	07/89-12/92	4G63 (DOHC 16V)

Engine	Information	A10	A20	A40	A50	A70	C10 - C30	C20	E01
All engines	->year 31/05/91								4.9401

				ENGINE
2.0 GTI 16V Cat 4WD	Petrol	110	09/91-10/92	4G63 (DOHC 16V)

Engine	Information	A10	A20	A40	A50	A70	C10 - C30	C20	E01
All engines	->year 31/05/91								4.9401

GALANT VII

				ENGINE
1.8	Petrol	85	02/94-08/96	4G93 (SOHC 16V)

Engine	Information	A10	A20	A40	A50	A70	C10 - C30	C20	E01
All engines									4.9278

				ENGINE
1.8 GLSI	Petrol	93	11/92-08/96	4G93 (SOHC 16V)

Engine	Information	A10	A20	A40	A50	A70	C10 - C30	C20	E01
All engines	version Mitsubishi			2.8322/47	3.8331/37				
All engines									4.9278

A10	CONDENSER	A20	CONTACT SET	A40	DISTRIBUTOR CAP	A50	ROTOR	A70	PICK-UP
C10	COIL	C20	IGNITION MODULE	C30	ELECTRONIC IGNITION KIT	E01	IGNITION CABLE SET		

The present application list is a brief version. For the detailed information about the possibility of installation on a specific vehicle, please refer to our web-catalogue http://catalogo.facet.eu/

Vehicle	alim.	kW	Date	Engine	FUNCTIONS ON THE VEHICLE							
					A10	A20	A40	A50	A70	C10 - C30	C20	E01
2.0 GLSI	Petrol	101	11/92-08/96	4G63 (SOHC 16V)								
All engines	version Mitsubishi						2.8322/47	3.8331/37				
All engines												4.9278
2.0 GLSI 4WD	Petrol	101	11/92-08/96	4G63 (SOHC 16V)								
All engines	version Mitsubishi						2.8322/47	3.8331/37				
All engines												4.9278
GALANT VIII												
2.0	Petrol	100	09/96-09/00	4G63 (SOHC 16V)								
All engines												4.9764
2.0	Petrol	98	09/00-10/04	4G63 (SOHC 16V)								
All engines												4.9764
2.5 V6 24V	Petrol	118	09/00-10/04	6A13								
All engines	version Mitsubishi							3.8331/34				
2.5 V6 24V	Petrol	120	09/96-09/00	6A13								
All engines	version Mitsubishi							3.8331/34				
GRANDIS												
2.0	Petrol	77	04/04->	4G63 (SOHC 8V)								
All engines												4.9764
I												
0.7	Petrol	38	02/07->	3B20								
All engines	x 3, COIL ON PLUG									9.6403 C10		
L200 II												
1.6	Petrol	60	04/87-10/96	4G32								
All engines	version Mitsubishi						2.8303/1	3.8323				
2.4	Petrol	82	06/90-10/96	4G64 (12V)								
All engines	version Mitsubishi						2.8303/1	3.8331/7				
2.4 4WD	Petrol	82	06/94-10/96	4G64 (12V)								
All engines	version Mitsubishi							3.8331/7				
2.6 4WD	Petrol	76	11/89-05/95	G54B								
All engines	version Mitsubishi						2.8303/1	3.8323				
L200 III												
2.0	Petrol	90	06/96-12/07	4G63 (SOHC 16V)								
All engines	version Mitsubishi							3.8331/31				

A10	CONDENSER	A20	CONTACT SET	A40	DISTRIBUTOR CAP	A50	ROTOR	A70	PICK-UP
C10	COIL	C20	IGNITION MODULE	C30	ELECTRONIC IGNITION KIT	E01	IGNITION CABLE SET		

The present application list is a brief version. For the detailed information about the possibility of installation on a specific vehicle, please refer to our web-catalogue http://catalogo.facet.eu/

Vehicle	alim.	kW	Date	Engine	FUNCTIONS ON THE VEHICLE A10	A20	A40	A50	A70	C10 - C30	C20	E01
2.4 4WD	Petrol	97	06/96-12/07	**4G64 (16V)**								

Engine	Information	A10	A20	A40	A50	A70	C10 - C30	C20	E01
All engines	->year 30/06/01, version Mitsubishi				3.8331/31				

L200 IV

2.4 i	Petrol	94	11/05-12/15	**4G64 (16V)**

Engine	Information	A10	A20	A40	A50	A70	C10 - C30	C20	E01
All engines	->year 30/06/01, version Mitsubishi				3.8331/31				

L400

2.0	Petrol	83	12/94-10/02	**4G63 (SOHC 16V)**

Engine	Information	A10	A20	A40	A50	A70	C10 - C30	C20	E01
All engines	version Mitsubishi				3.8331/19				
All engines	version Mitsubishi, Multi Point Injection (MPI)				3.8331/31				

2.0	Petrol	85	06/96-03/01	**4G63 (SOHC 16V)**

Engine	Information	A10	A20	A40	A50	A70	C10 - C30	C20	E01
All engines	version Mitsubishi				3.8331/19				
All engines	version Mitsubishi, Multi Point Injection (MPI)				3.8331/31				

2.4	Petrol	97	05/95-02/06	**4G64 (16V)**

Engine	Information	A10	A20	A40	A50	A70	C10 - C30	C20	E01
All engines	version Mitsubishi				3.8331/31				

2.4 i 4WD	Petrol	97	05/95-05/00	**4G64 (16V)**

Engine	Information	A10	A20	A40	A50	A70	C10 - C30	C20	E01
All engines	version Mitsubishi				3.8331/31				

LANCER

1.8 i	Petrol	0	10/07->	--

Engine	Information	A10	A20	A40	A50	A70	C10 - C30	C20	E01
All engines	pole nr. 4						9.6397 C10		

LANCER III/IV

1.2	Petrol	44	08/86-04/88	**4G16**

Engine	Information	A10	A20	A40	A50	A70	C10 - C30	C20	E01
All engines	version Mitsubishi			2.8303/1	3.8323				

LANCER IX

1.5	Petrol	80	06/08->	**4A91**

Engine	Information	A10	A20	A40	A50	A70	C10 - C30	C20	E01
All engines	x 4, COIL ON PLUG						9.6405 C10		

1.5 Bifuel	Petrol/ Liquified Petro-leum Gas (LPG)	80	02/10->	**4A91**

Engine	Information	A10	A20	A40	A50	A70	C10 - C30	C20	E01
All engines	x 4, COIL ON PLUG						9.6405 C10		

1.6 MIVEC	Petrol	86	05/10->	**4A92**

Engine	Information	A10	A20	A40	A50	A70	C10 - C30	C20	E01
All engines	x 4, COIL ON PLUG						9.6405 C10		

1.8	Petrol	103	05/10->	**4B10, 4J10**

Engine	Information	A10	A20	A40	A50	A70	C10 - C30	C20	E01
All engines	x 4, COIL ON PLUG						9.6397 C10		

1.8	Petrol	105	02/08->	**4B10**

Engine	Information	A10	A20	A40	A50	A70	C10 - C30	C20	E01
All engines	x 4, COIL ON PLUG						9.6397 C10		

A10	CONDENSER	**A20**	CONTACT SET	**A40**	DISTRIBUTOR CAP	**A50**	ROTOR	**A70**	PICK-UP
C10	COIL	**C20**	IGNITION MODULE	**C30**	ELECTRONIC IGNITION KIT	**E01**	IGNITION CABLE SET		

The present application list is a brief version. For the detailed information about the possibility of installation on a specific vehicle, please refer to our web-catalogue http://catalogo.facet.eu/

Vehicle	alim.	kW	Date	Engine	FUNCTIONS ON THE VEHICLE A10	A20	A40	A50	A70	C10 - C30	C20	E01
1.8 Bifuel	Petrol/ Liquified Petro-leum Gas (LPG)	105	01/10->	4B10								
Engine: All engines	Information: x 4, COIL ON PLUG									9.6397 C10		
1.8 Flex	Petrol/ Ethanol	103	03/09->	4B10								
Engine: All engines	Information: x 4, COIL ON PLUG									9.6397 C10		
1.8 Flexfuel	Petrol/ Ethanol	103	03/09->	6B4204T30								
Engine: All engines	Information: Qty: 4									9.6397 C10		
1.8 Flexfuel	Petrol/ Ethanol	105	01/10->	4B10								
Engine: All engines	Information: x 4, COIL ON PLUG									9.6397 C10		
1.8 MIVEC	Petrol	103	03/09->	4B10, 4J10								
Engine: All engines	Information: x 4, COIL ON PLUG									9.6397 C10		
1.8 Mivec	Petrol	110	11/09->	4B10								
Engine: All engines	Information: x 4, COIL ON PLUG									9.6397 C10		
2.0	Petrol	108	01/09->	4B11								
Engine: All engines	Information: x 4, COIL ON PLUG									9.6397 C10		
2.0	Petrol	110	01/13->	4B11								
Engine: All engines	Information: no specific info conc. application available, pole nr. 4									9.6397 C10		
2.0	Petrol	115	04/08->	4B11								
Engine: All engines	Information: no specific info conc. application available, pole nr. 4									9.6397 C10		
2.0 i	Petrol	113	04/07->	4B11								
Engine: All engines	Information: no specific info conc. application available, Qty: 4									9.6397 C10		
Engine: All engines	Information: x 4, COIL ON PLUG									9.6397 C10		
2.0 i	Petrol	118	10/09->	4B11								
Engine: All engines	Information: no specific info conc. application available, Qty: 4									9.6397 C10		
2.0 i 4WD	Petrol	113	03/07->	4B11								
Engine: All engines	Information: x 4, COIL ON PLUG									9.6397 C10		
LANCER V												
1.2 GL	Petrol	44	05/88-08/92	4G16								
Engine: All engines	Information: version Mitsubishi						2.8303/1	3.8323				

A10	CONDENSER	A20	CONTACT SET	A40	DISTRIBUTOR CAP	A50	ROTOR	A70	PICK-UP
C10	COIL	C20	IGNITION MODULE	C30	ELECTRONIC IGNITION KIT	E01	IGNITION CABLE SET		

The present application list is a brief version. For the detailed information about the possibility of installation on a specific vehicle, please refer to our web-catalogue http://catalogo.facet.eu/

Vehicle	alim.	kW	Date	Engine	FUNCTIONS ON THE VEHICLE A10	A20	A40	A50	A70	C10 - C30	C20	E01
1.3	Petrol	44	04/88-05/92	4G13 (8V)								
All engines	-->year 31/05/90, version Mitsubishi			2.8303/1	3.8323						
All engines	01/06/90 ->, version Mitsubishi			2.8322/58	3.8331/19						
1.3	Petrol	51	08/88-05/92	4G13 (8V), G13B								
All engines	-->year 31/05/90, version Mitsubishi			2.8303/1	3.8323						
All engines	01/06/90 ->, version Mitsubishi			2.8322/58	3.8331/19						
1.3 12V	Petrol	44	07/90-07/93	4G13 (12V)								
All engines	version Mitsubishi			2.8322/58	3.8331/19						
1.3 12V	Petrol	55	07/90-05/94	4G13 (12V)								
All engines	version Mitsubishi			2.8322/34							
1.3 GL	Petrol	50	05/88-06/90	G13B								
All engines	version Mitsubishi			2.8303/1	3.8323						
1.3 GL	Petrol	55	07/90-08/92	4G13 (12V)								
All engines	version Mitsubishi			2.8322/34							
1.5	Petrol	56	09/88-08/90	4G15 (12V)								
All engines	-->year 31/05/90, version Mitsubishi			2.8303/1	3.8331/7						
All engines	01/06/90 ->, version Mitsubishi			2.8322/34							
1.5	Petrol	61	04/89-08/90	4G15 (12V)								
All engines	-->year 31/05/90, version Mitsubishi			2.8303/1	3.8331/7						
All engines	01/06/90 ->, version Mitsubishi			2.8322/34							
1.5	Petrol	62	04/88-05/92	4G15 (12V), 4G15 (8V)								
All engines	-->year 31/05/90, version Mitsubishi			2.8303/1	3.8323						
All engines	01/06/90 ->, version Mitsubishi			2.8322/58	3.8331/19						
1.5	Petrol	65	09/90-09/92	4G15 (12V)								
All engines	version Mitsubishi			2.8322/34							
1.5 12V	Petrol	66	05/89-05/92	4G15 (12V)								
All engines	-->year 31/05/90, version Mitsubishi			2.8303/1	3.8331/7						
All engines	01/06/90 ->, version Mitsubishi			2.8322/34							
1.5 GLS	Petrol	63	08/89-08/92	4G15 (12V)								
All engines	-->year 31/05/90, version Mitsubishi			2.8303/1	3.8331/7						
All engines	01/06/90 ->, version Mitsubishi			2.8322/34							
1.6 16V	Petrol	83	06/92-05/94	4G92 (SOHC 16V)								
All engines	version Mitsubishi			2.8322/38	3.8331/37						
All engines											4.9278

A10	CONDENSER	A20	CONTACT SET	A40	DISTRIBUTOR CAP	A50	ROTOR	A70	PICK-UP
C10	COIL	C20	IGNITION MODULE	C30	ELECTRONIC IGNITION KIT	E01	IGNITION CABLE SET		

The present application list is a brief version. For the detailed information about the possibility of installation on a specific vehicle, please refer to our web-catalogue http://catalogo.facet.eu/

Vehicle	alim.	kW	Date	Engine	FUNCTIONS ON THE VEHICLE A10	A20	A40	A50	A70	C10 - C30	C20	E01
1.6 4WD	Petrol	84	06/92-11/93	ENGINE 4G92 (SOHC 16V)								
Engine	Information				A10	A20	A40	A50	A70	C10 - C30	C20	E01
All engines	version Mitsubishi						2.8322/38	3.8331/37				
All engines												4.9278
1.6 GTi	Petrol	91	05/88-05/90	ENGINE 4G61								
Engine	Information				A10	A20	A40	A50	A70	C10 - C30	C20	E01
All engines												4.9401
1.8 4WD	Petrol	63	03/89-12/90	ENGINE 4G37								
Engine	Information				A10	A20	A40	A50	A70	C10 - C30	C20	E01
All engines	->year 31/05/90, version Mitsubishi						2.8303/1	3.8323				
All engines	01/06/90 ->, version Mitsubishi						2.8322/31	3.8331/31				
1.8 4WD	Petrol	69	08/90-06/92	ENGINE 4G37								
Engine	Information				A10	A20	A40	A50	A70	C10 - C30	C20	E01
All engines	version Mitsubishi						2.8322/31	3.8331/31				
1.8 4WD	Petrol	71	09/89-06/92	ENGINE 4G37								
Engine	Information				A10	A20	A40	A50	A70	C10 - C30	C20	E01
All engines	->year 31/05/90, version Mitsubishi						2.8303/1	3.8331/7				
All engines	01/06/90 ->, version Mitsubishi						2.8322/31	3.8331/31				
1.8 GTi	Petrol	70	06/92-07/93	ENGINE 4G37								
Engine	Information				A10	A20	A40	A50	A70	C10 - C30	C20	E01
All engines	version Mitsubishi						2.8322/31	3.8331/31				
1.8 GTi 16V	Petrol	100	11/89-05/92	ENGINE 4G67								
Engine	Information				A10	A20	A40	A50	A70	C10 - C30	C20	E01
All engines												4.9401
LANCER VI												
1.5	Petrol	65	09/92-07/96	ENGINE 4G15 (12V)								
Engine	Information				A10	A20	A40	A50	A70	C10 - C30	C20	E01
All engines	version Mitsubishi						2.8322/58	3.8331/19				
1.6	Petrol	66	02/94-12/96	ENGINE 4G92 (SOHC 16V)								
Engine	Information				A10	A20	A40	A50	A70	C10 - C30	C20	E01
All engines												4.9278
1.6 16V	Petrol	83	06/92-10/03	ENGINE 4G92 (SOHC 16V)								
Engine	Information				A10	A20	A40	A50	A70	C10 - C30	C20	E01
All engines	version Mitsubishi, no specific info conc. application available						2.8322/38, 2.8322/68	3.8331/36, 3.8331/37				
All engines												4.9278
1.6 16V 4WD	Petrol	83	06/92-10/03	ENGINE 4G92 (SOHC 16V)								
Engine	Information				A10	A20	A40	A50	A70	C10 - C30	C20	E01
All engines	version Mitsubishi, no specific info conc. application available						2.8322/38, 2.8322/68	3.8331/36, 3.8331/37				
All engines												4.9278
1.6 i	Petrol	71	09/92-07/96	ENGINE 4G92 (SOHC 16V)								
Engine	Information				A10	A20	A40	A50	A70	C10 - C30	C20	E01
All engines												4.9278
1.8 GTi	Petrol	70	06/92-07/93	ENGINE 4G37								
Engine	Information				A10	A20	A40	A50	A70	C10 - C30	C20	E01
All engines	version Mitsubishi						2.8322/31	3.8331/31				

A10	CONDENSER	A20	CONTACT SET	A40	DISTRIBUTOR CAP	A50	ROTOR	A70	PICK-UP
C10	COIL	C20	IGNITION MODULE	C30	ELECTRONIC IGNITION KIT	E01	IGNITION CABLE SET		

The present application list is a brief version. For the detailed information about the possibility of installation on a specific vehicle, please refer to our web-catalogue http://catalogo.facet.eu/

Vehicle	alim.	kW	Date	Engine	FUNCTIONS ON THE VEHICLE A10	A20	A40	A50	A70	C10 - C30	C20	E01
LANCER VII												
1.3 12V	Petrol	55	12/95-08/03	ENGINE 4G13 (12V)								
Engine: All engines	Information: version Mitsubishi						2.8322/68	3.8331/36				
Engine: All engines												4.9753
1.5	Petrol	74	06/00-08/03	ENGINE 301353C								
Engine: All engines	Information: version Mitsubishi						2.8322/58	3.8331/19				
Engine: All engines												4.9753
1.5 16V	Petrol	69	10/99-08/03	ENGINE 301353C								
Engine: All engines	Information: version Mitsubishi						2.8322/58	3.8331/19				
Engine: All engines												4.9753
1.6 16V	Petrol	66	12/95-08/03	ENGINE 4G92 (SOHC 16V)								
Engine: All engines												4.9764
2.0 16V EVO IV	Petrol	199	08/96-06/97	ENGINE 4G63 Turbo								
Engine: All engines												4.7251
EVO V	Petrol	206	01/98-12/98	ENGINE 4G63 Turbo								
Engine: All engines												4.7251
EVO VI	Petrol	207	01/99-02/01	ENGINE 4G63 Turbo								
Engine: All engines												4.7251
LANCER VIII												
1.3	Petrol	60	09/03-12/13	ENGINE 4G13 (16V)								
Engine: All engines												4.9883
1.6	Petrol	72	09/03-12/13	ENGINE 4G18								
Engine: All engines												4.9883
1.8 SEi Limited	Petrol	91	09/03-03/07	ENGINE 4G93 (GDI)								
Engine: All engines	Information: Qty: 4									9.6397 C10		
2.0	Petrol	85	09/03->	ENGINE 4G63 (DOHC 16V)								
Engine: All engines												4.7251
2.0	Petrol	99	09/03-12/13	ENGINE 4G63 (DOHC 16V), 4G63-7								
Engine: All engines												4.7251
MIRAGE III												
1.5	Petrol	62	05/88-06/90	ENGINE 4G15 (12V)								
Engine: All engines	Information: version Mitsubishi						2.8322/34					

A10	CONDENSER	A20	CONTACT SET	A40	DISTRIBUTOR CAP	A50	ROTOR	A70	PICK-UP
C10	COIL	C20	IGNITION MODULE	C30	ELECTRONIC IGNITION KIT	E01	IGNITION CABLE SET		

The present application list is a brief version. For the detailed information about the possibility of installation on a specific vehicle, please refer to our web-catalogue http://catalogo.facet.eu/

Vehicle	alim.	kW	Date	Engine	FUNCTIONS ON THE VEHICLE A10	A20	A40	A50	A70	C10 - C30	C20	E01
1.5 12V	Petrol	60	05/88-06/90	4G15 (12V)								
Engine: All engines	Information: version Mitsubishi						2.8322/34					
1.5 12V	Petrol	62	05/88-06/90	4G15 (12V)								
Engine: All engines	Information: version Mitsubishi						2.8322/34					
MONTERO												
2.4 16V	Petrol	100	04/91->	4G64 (12V)								
Engine: All engines	Information: version Mitsubishi						2.8303/1	3.8331/7				
2.6i [USA]	Petrol	76	01/83-12/90	4G54								
Engine: All engines	Information: version Mitsubishi						2.8303/1	3.8323				
MONTERO IO												
1.8 GDI	Petrol	88	08/99->	4G93 (SOHC 16V)								
Engine: All engines	Information:											4.9764
MONTERO SPORT												
3.0 V6	Petrol	130	11/98->	6G72								
Engine: All engines	Information:											4.9344
OUTLANDER I												
2.0	Petrol	100	05/03-10/06	4G63 (DOHC 16V)								
Engine: All engines	Information:											4.7251
2.0 4WD	Petrol	100	05/03-10/06	4G63 (DOHC 16V)								
Engine: All engines	Information:											4.7251
2.0 4WD	Petrol	93	05/03-10/06	4G63 (DOHC 16V)								
Engine: All engines	Information:											4.7251
2.0 Turbo 4WD	Petrol	148	04/04-10/06	4G63-T (DOHC 16V)								
Engine: All engines	Information:											4.7251
2.0 Turbo-R 4WD	Petrol	177	01/02-10/06	4G63 Turbo								
Engine: All engines	Information:											4.7251
2.4 4WD	Petrol	102	05/03-10/06	4G64 (16V)								
Engine: All engines	Information: Qty: 4, no specific info conc. application available									9.6397 C10		
2.4 HDD Mivec	Petrol	118	03/01-12/06	4G69								
Engine: All engines	Information: Qty: 4, no specific info conc. application available									9.6397 C10		
OUTLANDER II												
2.0	Petrol	108	11/06-11/12	4B11								
Engine: All engines	Information: x 4, COIL ON PLUG									9.6397 C10		

A10	CONDENSER	A20	CONTACT SET	A40	DISTRIBUTOR CAP	A50	ROTOR	A70	PICK-UP
C10	COIL	C20	IGNITION MODULE	C30	ELECTRONIC IGNITION KIT	E01	IGNITION CABLE SET		

The present application list is a brief version. For the detailed information about the possibility of installation on a specific vehicle, please refer to our web-catalogue http://catalogo.facet.eu/

Vehicle	alim.	kW	Date	Engine	FUNCTIONS ON THE VEHICLE							
					A10	A20	A40	A50	A70	C10 - C30	C20	E01
2.0	Petrol	118	06/09-11/12	ENGINE 4B11								
Engine: All engines	Information: Qty: 4									9.6397 C10		
2.0 4WD	Petrol	108	11/06-11/12	ENGINE 4B11								
Engine: All engines	Information: x 4, COIL ON PLUG									9.6397 C10		
2.4	Petrol	125	11/06-11/12	ENGINE 4B12								
Engine: All engines	Information: x 4, COIL ON PLUG									9.6397 C10		
2.4 4WD	Petrol	125	09/07-11/12	ENGINE 4B12								
Engine: All engines	Information: x 4, COIL ON PLUG									9.6397 C10		
2.4 Flex 4WD	Petrol/ Ethanol	125	09/07-11/12	ENGINE 4B12								
Engine: All engines	Information: x 4, COIL ON PLUG									9.6397 C10		
3.0 4WD	Petrol	162	11/06-11/12	ENGINE 6B31								
Engine: All engines	Information: x 6, COIL ON PLUG									9.6397 C10		
3.0 4WD	Petrol	169	09/10-12/12	ENGINE 6B31								
Engine: All engines	Information: x 6, COIL ON PLUG									9.6397 C10		
3.0 4WD	Petrol	177	10/09-11/12	ENGINE 6B31								
Engine: All engines	Information: Qty: 6									9.6397 C10		
3.0 AWD	Petrol	164	11/06-12/10	ENGINE 6B31								
Engine: All engines	Information: x 6, COIL ON PLUG									9.6397 C10		
3.0 FWD	Petrol	162	11/06-11/12	ENGINE 6B31								
Engine: All engines	Information: Qty: 6									9.6397 C10		
OUTLANDER III												
3.0	Petrol	0	08/12->	ENGINE 6B31								
Engine: All engines	Information: Qty: 6									9.6397 C10		
3.0 4WD	Petrol	165	03/14->	ENGINE 6B31								
Engine: All engines	Information: x 6, COIL ON PLUG									9.6397 C10		
3.0 4WD	Petrol	169	03/14->	ENGINE 6B31								
Engine: All engines	Information: x 6, COIL ON PLUG									9.6397 C10		
3.0 GT 4WD	Petrol	167	08/12->	ENGINE 6B31								
Engine: All engines	Information: x 6, COIL ON PLUG									9.6397 C10		

A10	CONDENSER	A20	CONTACT SET	A40	DISTRIBUTOR CAP	A50	ROTOR	A70	PICK-UP
C10	COIL	C20	IGNITION MODULE	C30	ELECTRONIC IGNITION KIT	E01	IGNITION CABLE SET		

The present application list is a brief version. For the detailed information about the possibility of installation on a specific vehicle, please refer to our web-catalogue http://catalogo.facet.eu/

Vehicle	alim.	kW	Date	Engine	FUNCTIONS ON THE VEHICLE A10	A20	A40	A50	A70	C10 - C30	C20	E01
PAJERO I												
2.6	Petrol	76	01/83-11/90	ENGINE 4G54								
Engine: All engines	Information: ->year 31/08/84, version Mitsubishi					1.5085						
Engine: All engines	Information: version Mitsubishi						2.8303/1	3.8323				
2.6 4WD	Petrol	76	01/83-09/87	ENGINE 4G54								
Engine: All engines	Information: ->year 31/08/84, version Mitsubishi					1.5085						
Engine: All engines	Information: version Mitsubishi						2.8303/1	3.8323				
2.6 4WD	Petrol	79	10/86-05/91	ENGINE 4G54								
Engine: All engines	Information: version Mitsubishi					1.5085	2.8303/1	3.8323				
3.0 i 4WD	Petrol	105	05/88-05/91	ENGINE 6G72 (SOHC 12V)								
Engine: All engines	Information: version Mitsubishi						2.8322/16	3.8331/9				
3.0 V6	Petrol	104	11/88-11/90	ENGINE 6G72 (SOHC 12V)								
Engine: All engines	Information: version Mitsubishi						2.8322/16	3.8331/9				
PAJERO II												
2.4	Petrol	82	04/91-04/00	ENGINE 4G64 (12V)								
Engine: All engines	Information: version Mitsubishi						2.8303/1	3.8331/7				
2.6 4WD	Petrol	76	03/91-10/97	ENGINE 4G54								
Engine: All engines	Information: version Mitsubishi						2.8303/1	3.8323				
3.0 V6	Petrol	110	12/90-12/95	ENGINE 6G72 (SOHC 12V)								
Engine: All engines	Information: version Mitsubishi						2.8322/16	3.8331/9				
3.0 V6 24V	Petrol	130	06/97-10/99	ENGINE 6G72 (SOHC 24V)								
Engine: All engines	Information:											4.9344
3.0 V6 24V	Petrol	133	06/94-04/00	ENGINE 6G72 (SOHC 24V)								
Engine: All engines	Information: 01/06/97 ->											4.9344
3.0 V6 4WD	Petrol	110	12/90-12/95	ENGINE 6G72 (SOHC 12V)								
Engine: All engines	Information: version Mitsubishi						2.8322/16	3.8331/9				
3.5 V6 24V	Petrol	143	07/97-10/99	ENGINE 6G74 (DOHC 24V), 6G74 (SOHC 24V)								
Engine: All engines	Information: 01/06/97 ->											4.9344
3.5 V6 24V	Petrol	153	06/94-10/99	ENGINE 6G74 (DOHC 24V), 6G74 (SOHC 24V)								
Engine: All engines	Information: 01/06/97 ->											4.9344

A10	CONDENSER	A20	CONTACT SET	A40	DISTRIBUTOR CAP	A50	ROTOR	A70	PICK-UP
C10	COIL	C20	IGNITION MODULE	C30	ELECTRONIC IGNITION KIT	E01	IGNITION CABLE SET		

The present application list is a brief version. For the detailed information about the possibility of installation on a specific vehicle, please refer to our web-catalogue http://catalogo.facet.eu/

Vehicle	alim.	kW	Date	Engine	FUNCTIONS ON THE VEHICLE							
					A10	A20	A40	A50	A70	C10 - C30	C20	E01
PAJERO III												
2.4	Petrol	82	10/01-08/06	**4G64 (12V)**								
Engine: All engines	Information: version Mitsubishi						2.8303/1	3.8331/7				
2.4 4x4	Petrol	82	10/01-12/06	**4G64 (12V)**								
Engine: All engines	Information: version Mitsubishi						2.8303/1	3.8331/7				
3.0	Petrol	125	10/01-12/06	**6G72 (SOHC 24V)**								
Engine: All engines	Information:											4.9344
3.0 ZR	Petrol	132	08/03->	**6G72 (DOHC 24V)**								
Engine: All engines	Information:											4.9344
3.5	Petrol	149	04/00-01/07	**6G74 (DOHC 24V)**								
Engine: All engines	Information: 01/06/97 ->											4.9344
3.5 i	Petrol	160	09/03-10/06	**6G74 (DOHC 24V), 6G74 (SOHC 24V)**								
Engine: All engines	Information: 01/06/97 ->											4.9344
3.5 V6 GDI	Petrol	149	04/00-12/06	**6G74 (GDI)**								
Engine: All engines	Information: 01/06/97 ->											4.9344
PAJERO PININ												
1.8	Petrol	84	11/01-06/07	**4G93 (SOHC 16V)**								
Engine: All engines	Information:											4.9764
1.8 GDI	Petrol	88	10/99-10/01	**4G93 (GDI)**								
Engine: All engines	Information:											4.9764
PAJERO SPORT I												
3.0 4WD	Petrol	129	09/96-12/01	**6G72 (SOHC 24V)**								
Engine: All engines	Information:											4.9344
3.0 V6	Petrol	125	06/00->	**6G72 (SOHC 24V)**								
Engine: All engines	Information:											4.9344
3.0 V6	Petrol	130	11/98-10/00	**6G72 (SOHC 24V)**								
Engine: All engines	Information:											4.9344
3.0 V6 4WD	Petrol	123	03/03->	**6G72 (DOHC 24V)**								
Engine: All engines	Information:											4.9344
PAJERO SPORT II												
2.4	Petrol	94	07/08->	**4G64 (16V)**								
Engine: All engines	Information: version Mitsubishi						2.8303/1	3.8331/7				

A10	CONDENSER	**A20**	CONTACT SET	**A40**	DISTRIBUTOR CAP	**A50**	ROTOR	**A70**	PICK-UP
C10	COIL	**C20**	IGNITION MODULE	**C30**	ELECTRONIC IGNITION KIT	**E01**	IGNITION CABLE SET		

The present application list is a brief version. For the detailed information about the possibility of installation on a specific vehicle, please refer to our web-catalogue http://catalogo.facet.eu/

Vehicle	alim.	kW	Date	Engine	FUNCTIONS ON THE VEHICLE A10	A20	A40	A50	A70	C10 - C30	C20	E01
3.0	Petrol	162	09/08->	6B31						9.6397 C10		
3.0 4WD	Petrol	162	09/08->	6B31						9.6397 C10		
PRECIS												
1.5 i [USA]	Petrol	0	01/89-12/94	G4DJ			2.8303/1	3.8331/7				
SHOGUN												
I 2.6 4x4	Petrol	76	01/84-02/91	4G54		1.5085						
							2.8303/1					
								3.8323				
SIGMA												
3.0	Petrol	125	06/92-10/96	6G72 (SOHC 12V)			2.8322/43					
3.0 V6	Petrol	130	12/90-07/96	6G72 (SOHC 12V)			2.8322/43					
SPACE GEAR												
2.0 16V	Petrol	83	08/96-05/00	4G63 (DOHC 16V)				3.8331/19				
								3.8331/31				
2.4 i	Petrol	97	05/95-05/00	4G64 (16V)				3.8331/31				
SPACE RUNNER												
1.8	Petrol	85	06/96-08/99	4G93 (SOHC 16V)			2.8322/38	3.8331/37				
								3.8331/36				
												4.9278
1.8	Petrol	90	10/91-08/99	4G93 (SOHC 16V)			2.8322/38	3.8331/37				
								3.8331/36				
												4.9278
1.8 4WD	Petrol	85	06/96-08/99	4G93 (SOHC 16V)			2.8322/38					
								3.8331/36				
								3.8331/37				
												4.9278

Engine	Information
All engines	Qty: 6
All engines	x 6, COIL ON PLUG
All engines	version Mitsubishi
All engines	->year 31/08/84, version Mitsubishi
All engines	version Mitsubishi, version Mitsubishi
All engines	version Mitsubishi
All engines	
All engines	version Mitsubishi
All engines	version Mitsubishi, Multi Point Injection (MPI)
All engines	
All engines	->year 31/05/96, version Mitsubishi
All engines	01/06/96 ->, version Mitsubishi
All engines	
All engines	->year 31/05/96, version Mitsubishi
All engines	01/06/96 ->, version Mitsubishi
All engines	
All engines	version Mitsubishi
All engines	01/06/96 ->, version Mitsubishi
All engines	->year 31/05/96, version Mitsubishi
All engines	

A10	CONDENSER	A20	CONTACT SET	A40	DISTRIBUTOR CAP	A50	ROTOR	A70	PICK-UP		
C10	COIL	C20	IGNITION MODULE	C30	ELECTRONIC IGNITION KIT	E01	IGNITION CABLE SET				

The present application list is a brief version. For the detailed information about the possibility of installation on a specific vehicle, please refer to our web-catalogue http://catalogo.facet.eu/

Vehicle	alim.	kW	Date	Engine	FUNCTIONS ON THE VEHICLE: A10	A20	A40	A50	A70	C10 - C30	C20	E01
1.8 4WD	Petrol	90	10/91-08/99	4G93 (SOHC 16V)								

Engine	Information	A10	A20	A40	A50	A70	C10 - C30	C20	E01
All engines	version Mitsubishi			2.8322/38					
All engines	01/06/96 ->, version Mitsubishi				3.8331/36				
All engines	->year 31/05/96, version Mitsubishi				3.8331/37				
All engines									4.9278

2.0	Petrol	100	08/99-08/02	4G63 (SOHC 16V)								

Engine	Information	A10	A20	A40	A50	A70	C10 - C30	C20	E01
All engines									4.9764

2.0	Petrol	98	05/00-08/02	4G63 (SOHC 16V)								

Engine	Information	A10	A20	A40	A50	A70	C10 - C30	C20	E01
All engines									4.9764

SPACE STAR

1.3 16V	Petrol	60	09/00-12/04	4G13 (16V)								

Engine	Information	A10	A20	A40	A50	A70	C10 - C30	C20	E01
All engines	->year 31/05/00, version Mitsubishi			2.8322/68	3.8331/36				
All engines	->year 31/05/00								4.9882
All engines	01/06/00 ->								4.9883

1.3 16V	Petrol	61	12/98-12/04	4G13 (16V)								

Engine	Information	A10	A20	A40	A50	A70	C10 - C30	C20	E01
All engines	->year 31/05/00, version Mitsubishi			2.8322/68	3.8331/36				
All engines	->year 31/05/00								4.9882
All engines	01/06/00 ->								4.9883

1.3 16V	Petrol	63	06/98-12/04	4G13 (16V)								

Engine	Information	A10	A20	A40	A50	A70	C10 - C30	C20	E01
All engines	->year 31/05/00, version Mitsubishi			2.8322/68	3.8331/36				
All engines	->year 31/05/00								4.9882
All engines	01/06/00 ->								4.9883

1.6 16V	Petrol	72	01/01-12/04	4G18								

Engine	Information	A10	A20	A40	A50	A70	C10 - C30	C20	E01
All engines									4.9883

1.8 GDI	Petrol	87	06/98-12/04	4G93 (GDI)								

Engine	Information	A10	A20	A40	A50	A70	C10 - C30	C20	E01
All engines									4.9764

1.8 GDI	Petrol	90	06/98-12/04	4G93 (GDI)								

Engine	Information	A10	A20	A40	A50	A70	C10 - C30	C20	E01
All engines									4.9764

1.8 MPI	Petrol	82	10/02-12/04	4G93 (DOHC 16V)								

Engine	Information	A10	A20	A40	A50	A70	C10 - C30	C20	E01
All engines									4.9764

SPACE WAGON

1.8	Petrol	90	10/91-10/98	4G93 (SOHC 16V)								

Engine	Information	A10	A20	A40	A50	A70	C10 - C30	C20	E01
All engines	version Mitsubishi			2.8322/38	3.8331/37				
All engines									4.9278

1.8 4WD	Petrol	90	10/91-10/98	4G93 (SOHC 16V)								

Engine	Information	A10	A20	A40	A50	A70	C10 - C30	C20	E01
All engines	version Mitsubishi			2.8322/38	3.8331/37				
All engines									4.9278

A10	CONDENSER	A20	CONTACT SET	A40	DISTRIBUTOR CAP	A50	ROTOR	A70	PICK-UP
C10	COIL	C20	IGNITION MODULE	C30	ELECTRONIC IGNITION KIT	E01	IGNITION CABLE SET		

The present application list is a brief version. For the detailed information about the possibility of installation on a specific vehicle, please refer to our web-catalogue http://catalogo.facet.eu/

Vehicle	alim.	kW	Date	Engine	FUNCTIONS ON THE VEHICLE							
					A10	A20	A40	A50	A70	C10 - C30	C20	E01
2.0	Petrol	98	10/92-10/98	ENGINE 4G63 (SOHC 16V)								
All engines	version Mitsubishi						2.8322/38	3.8331/37				
All engines												4.9278
2.0 16V	Petrol	98	06/00->	ENGINE 4G63 (DOHC 16V)								
All engines												4.9764
2.0 4WD	Petrol	98	10/92-10/98	ENGINE 4G63 (SOHC 16V)								
All engines	version Mitsubishi						2.8322/38	3.8331/37				
All engines												4.9278
2.4 GDI	Petrol	110	07/98->	ENGINE 4G64 (GDI)								
All engines												4.9764
2.4 GDi GLX	Petrol	108	08/00-05/03	ENGINE 4G64 (GDI)								
All engines												4.9764
2.4 GDi GLX	Petrol	110	11/97-07/00	ENGINE 4G64 (GDI)								
All engines												4.9764
STARION												
2.0 Turbo ECi	Petrol	125	06/82-12/85	ENGINE 4G63-T (ECI)								
All engines	01/06/84 ->, version Mitsubishi						2.8303/1	3.8323				
2.0 Turbo ECi	Petrol	132	05/85-08/87	ENGINE 4G63-T/C								
All engines	01/06/84 ->, version Mitsubishi						2.8303/1	3.8323				
VALLEY												
2.0	Petrol	75	09/92-10/94	ENGINE 4G63-T								
All engines	version Denso						2.7617	3.7630				

A10	CONDENSER	**A20**	CONTACT SET	**A40**	DISTRIBUTOR CAP	**A50**	ROTOR	**A70**	PICK-UP
C10	COIL	**C20**	IGNITION MODULE	**C30**	ELECTRONIC IGNITION KIT	**E01**	IGNITION CABLE SET		

The present application list is a brief version. For the detailed information about the possibility of installation on a specific vehicle, please refer to our web-catalogue http://catalogo.facet.eu/

Vehicle	alim.	kW	Date	Engine	FUNCTIONS ON THE VEHICLE							
					A10	A20	A40	A50	A70	C10 - C30	C20	E01
MARINA												
				ENGINE								
1.8	Petrol	59	04/71-12/79	--								
Engine	Information				A10	A20	A40	A50	A70	C10 - C30	C20	E01
All engines						1.4683MHDV	2.8075	3.8106				
				ENGINE								
1.8 TC	Petrol	68	04/71-09/75	--								
Engine	Information				A10	A20	A40	A50	A70	C10 - C30	C20	E01
All engines						1.4683MHDV	2.8075	3.8106				
				ENGINE								
1300	Petrol	42	04/71-06/80	--								
Engine	Information				A10	A20	A40	A50	A70	C10 - C30	C20	E01
All engines						1.4683MHDV	2.8075	3.8106				
				ENGINE								
1300	Petrol	44	04/71-06/75	--								
Engine	Information				A10	A20	A40	A50	A70	C10 - C30	C20	E01
All engines						1.4683MHDV	2.8075	3.8106				
				ENGINE								
1800	Petrol	53	04/71-12/75	--								
Engine	Information				A10	A20	A40	A50	A70	C10 - C30	C20	E01
All engines						1.4683MHDV	2.8075	3.8106				
				ENGINE								
1800	Petrol	57	04/71-10/75	--								
Engine	Information				A10	A20	A40	A50	A70	C10 - C30	C20	E01
All engines						1.4683MHDV	2.8075	3.8106				
				ENGINE								
1800 TC	Petrol	70	04/71-12/75	--								
Engine	Information				A10	A20	A40	A50	A70	C10 - C30	C20	E01
All engines						1.4683MHDV	2.8075	3.8106				
MINOR												
				ENGINE								
0.9	Petrol	28	11/55-12/62	--								
Engine	Information				A10	A20	A40	A50	A70	C10 - C30	C20	E01
All engines								3.8106				
				ENGINE								
1.1	Petrol	37	01/62-10/71	--								
Engine	Information				A10	A20	A40	A50	A70	C10 - C30	C20	E01
All engines							2.8075	3.8106				
OXFORD												
				ENGINE								
1.5	Petrol	44	11/59-09/62	--								
Engine	Information				A10	A20	A40	A50	A70	C10 - C30	C20	E01
All engines								3.8106				
				ENGINE								
1.7	Petrol	63	05/62-04/70	--								
Engine	Information				A10	A20	A40	A50	A70	C10 - C30	C20	E01
All engines							2.8075	3.8106				

A10	CONDENSER	A20	CONTACT SET	A40	DISTRIBUTOR CAP	A50	ROTOR	A70	PICK-UP
C10	COIL	C20	IGNITION MODULE	C30	ELECTRONIC IGNITION KIT	E01	IGNITION CABLE SET		

The present application list is a brief version. For the detailed information about the possibility of installation on a specific vehicle, please refer to our web-catalogue http://catalogo.facet.eu/

Vehicle	alim.	kW	Date	Engine	FUNCTIONS ON THE VEHICLE A10	A20	A40	A50	A70	C10 - C30	C20	E01
100NX												
1.6	Petrol	66	03/90-10/94	GA16DS								
All engines	FOR: (D), FOR: (NL), FOR: (CH), FOR: (A), FOR: (S), FOR: (SF), FOR: (N), FOR: (DK), version Hitachi						2.7946	3.7970				
All engines	FOR: (F), FOR: (B), FOR: (I), FOR: (E), FOR: (P), FOR: (GR), version Lucas						2.8101PHT					
All engines	FOR: (F), FOR: (B), FOR: (I), FOR: (E), FOR: (P), FOR: (GR), version Hitachi							3.7986				
1.6 SR	Petrol	75	09/93-10/94	GA16DE								
All engines												4.9399
2.0	Petrol	110	10/90-10/94	SR20DE								
All engines	version Hitachi						2.7973	3.7985				
2.0 GTI	Petrol	105	03/91-10/94	SR20DE								
All engines	version Hitachi						2.7973	3.7985				
200 SX												
1.8i Turbo	Petrol	0	01/87->	CA18ET								
All engines	version Hitachi						2.7940	3.7966				
240SX												
2.4	Petrol	112	05/94-08/97	KA24DE								
All engines	01/01/95 ->, version Mitsubishi						2.8322/52	3.8331/36				
2.4	Petrol	115	04/93-09/94	KA24DE								
All engines	->year 31/12/94, version Mitsubishi							3.8331/18				
ALMERA												
1.6	Petrol	75	11/12->	K4M								
All engines	Qty: 4									9.6332 C10		
ALMERA I												
1.4	Petrol	64	09/95-07/00	GA14DE								
All engines	->year 31/01/98, version Hitachi						2.7989					
All engines	version Hitachi							3.8002				
All engines												4.9399
1.4 GX,LX	Petrol	55	09/95-07/00	GA14DE								
All engines	->year 31/01/98, version Hitachi						2.7989					
All engines	version Hitachi							3.8002				
All engines												4.9399
1.4 S, GX, LX	Petrol	55	09/95-03/00	GA14DE								
All engines	->year 31/01/98, version Hitachi						2.7989					
All engines	version Hitachi							3.8002				
All engines												4.9399
1.6	Petrol	73	09/95-07/00	GA16DE								
All engines	->year 31/01/98, version Hitachi						2.7989					

A10	CONDENSER	**A20**	CONTACT SET	**A40**	DISTRIBUTOR CAP	**A50**	ROTOR	**A70**	PICK-UP
C10	COIL	**C20**	IGNITION MODULE	**C30**	ELECTRONIC IGNITION KIT	**E01**	IGNITION CABLE SET		

The present application list is a brief version. For the detailed information about the possibility of installation on a specific vehicle, please refer to our web-catalogue http://catalogo.facet.eu/

Vehicle	alim.	kW	Date	Engine	FUNCTIONS ON THE VEHICLE							
					A10	A20	A40	A50	A70	C10 - C30	C20	E01
1.6	Petrol	73	09/95-07/00	GA16DE								
All engines	version Hitachi							3.8002				
All engines												4.9399
1.6	Petrol	75	07/95-03/00	GA16DE								
All engines	->year 31/01/98, version Hitachi						2.7989					
All engines	version Hitachi							3.8002				
All engines												4.9399
1.6	Petrol	86	09/95-07/00	GA16DE								
All engines	->year 31/01/98, version Hitachi						2.7989					
All engines	version Hitachi							3.8002				
All engines												4.9399
1.6 SLX	Petrol	66	09/95-07/00	GA16DE								
All engines	->year 31/01/98, version Hitachi						2.7989					
All engines	version Hitachi							3.8002				
All engines												4.9399
1.6 SR, SLX	Petrol	66	09/95-03/00	GA16DE								
All engines	->year 31/01/98, version Hitachi						2.7989					
All engines	version Hitachi							3.8002				
All engines												4.9399
1.8	Petrol	84	07/95-05/00	QG18DE								
All engines	01/03/01 ->, Qty: 4									9.6457 C10		
2.0 GTi	Petrol	105	07/96-03/00	SR20DE								
All engines	version Mitsubishi							3.8331/36				
All engines	->year 30/11/99											4.9411
ALMERA II												
1.5	Petrol	66	03/00-11/06	QG15DE								
All engines	Almera, 01/04/01 ->, N16E, x 4, COIL ON PLUG									9.6457 C10		
1.5	Petrol	72	10/02-09/06	QG15DE								
All engines	Almera, x 4, COIL ON PLUG									9.6457 C10		
1.5	Petrol	77	03/01->	QG15DE								
All engines	01/03/01 ->, Qty: 4									9.6457 C10		
1.5 XL	Petrol	77	03/01->	QG15DE								
All engines	01/03/01 ->, Qty: 4									9.6457 C10		
1.8	Petrol	84	01/00-11/02	QG18DE								
All engines	Almera, 01/04/01 ->, x 4, COIL ON PLUG									9.6457 C10		

A10	CONDENSER	A20	CONTACT SET	A40	DISTRIBUTOR CAP	A50	ROTOR	A70	PICK-UP
C10	COIL	C20	IGNITION MODULE	C30	ELECTRONIC IGNITION KIT	E01	IGNITION CABLE SET		

The present application list is a brief version. For the detailed information about the possibility of installation on a specific vehicle, please refer to our web-catalogue http://catalogo.facet.eu/

Vehicle	alim.	kW	Date	Engine	FUNCTIONS ON THE VEHICLE A10	A20	A40	A50	A70	C10 - C30	C20	E01
1.8	Petrol	85	10/02-09/06	QG18DE								
Engine: All engines	Information: Almera, x 4, COIL ON PLUG									9.6457 C10		
1.8	Petrol	94	01/02->	QG18DE								
Engine: All engines	Information: 01/03/01 ->, Qty: 4									9.6457 C10		
ALMERA III												
1.2 i	Petrol	58	09/11->	HR12DE								
Engine: All engines	Information: Qty: 3									9.6452 C10		
1.5	Petrol	0	01/06->	QG15DE								
Engine: All engines	Information: Qty: 4									9.6457 C10		
1.6	Petrol	79	01/06->	QG16								
Engine: All engines	Information: Qty: 4									9.6457 C10		
1.6 16V	Petrol	79	03/06->	QG16, QG16DE								
Engine: Eng. QG16	Information: x 4, COIL ON PLUG									9.6457 C10		
Engine: Eng. QG16DE	Information: Qty: 4									9.6457 C10		
ALMERA TINO												
1.8	Petrol	84	08/00-02/06	QG18DE								
Engine: All engines	Information: 01/12/00 ->, x 4, COIL ON PLUG									9.6457 C10		
1.8	Petrol	85	12/02-02/06	QG18DE								
Engine: All engines	Information: x 4, COIL ON PLUG									9.6457 C10		
1.8	Petrol	88	12/98-02/03	QG18DE								
Engine: All engines	Information: 01/03/01 ->, Qty: 4									9.6457 C10		
2.0	Petrol	100	08/00-01/03	SR20DE								
Engine: All engines	Information: ->year 30/11/00, version Mitsubishi							3.8331/36				
Engine: All engines	Information:											4.9411
ALTIMA												
2.4	Petrol	112	06/93-09/01	KA24DE								
Engine: All engines	Information:									9.6196 C10		
BLUEBIRD												
1.6	Petrol	61	03/86-06/90	CA16S								
Engine: All engines	Information: version Hitachi						2.7963					
1.6	Petrol	66	12/85-02/90	CA16S								
Engine: All engines	Information: version Hitachi						2.7963					

A10	CONDENSER	A20	CONTACT SET	A40	DISTRIBUTOR CAP	A50	ROTOR	A70	PICK-UP
C10	COIL	C20	IGNITION MODULE	C30	ELECTRONIC IGNITION KIT	E01	IGNITION CABLE SET		

The present application list is a brief version. For the detailed information about the possibility of installation on a specific vehicle, please refer to our web-catalogue http://catalogo.facet.eu/

Vehicle	alim.	kW	Date	Engine	FUNCTIONS ON THE VEHICLE: A10	A20	A40	A50	A70	C10 - C30	C20	E01
1.6 DX	Petrol	61	11/83-02/88	CA16S			2.7963					
1.8 Turbo	Petrol	99	04/84-11/92	CA18T			2.7946	3.7970				
2.0	Petrol	75	12/85-09/90	CA20S			2.7963					
2.0 i	Petrol	77	04/84-12/90	CA20E			2.7946	3.7970				
								3.7966				
2.0 i	Petrol	85	09/88-09/90	CA20E			2.7946	3.7970				
								3.7966				
CABSTAR II												
2.0	Petrol	66	07/92-05/94	--, Z20S			2.8322/36					
CUBE												
1.6 16V	Petrol	81	08/09->	HR16DE						9.6452 C10		
FRONTIER												
2.5 i	Petrol	0	11/14->	QR25DE						9.6452 C10		
JUKE I												
1.2 DIG-T	Petrol	85	05/14->	HR12DDT, HRA2DDT								
				Eng. HR12DDT – Qty: 4						9.6513 C10		
				Eng. HRA2DDT – x 4, COIL ON PLUG						9.6513 C10		
1.5	Petrol	84	10/13->	HR15DE						9.6452 C10		
1.6	Petrol	140	03/13->	MR16DDT						9.6451 C10		
1.6	Petrol	69	01/13->	HR16DE						9.6452 C10		
1.6	Petrol	83	07/18->	HR16DE						9.6452 C10		

A10	CONDENSER	A20	CONTACT SET	A40	DISTRIBUTOR CAP	A50	ROTOR	A70	PICK-UP
C10	COIL	C20	IGNITION MODULE	C30	ELECTRONIC IGNITION KIT	E01	IGNITION CABLE SET		

The present application list is a brief version. For the detailed information about the possibility of installation on a specific vehicle, please refer to our web-catalogue http://catalogo.facet.eu/

Vehicle	alim.	kW	Date	Engine	FUNCTIONS ON THE VEHICLE A10	A20	A40	A50	A70	C10 - C30	C20	E01
1.6	Petrol	86	06/10->	HR16DE								

Engine	Information	A10	A20	A40	A50	A70	C10 - C30		C20	E01
All engines	x 4, COIL ON PLUG						9.6452	C10		

1.6 CVTC	Petrol	72	08/14->	HR16DE

Engine	Information	A10	A20	A40	A50	A70	C10 - C30		C20	E01
All engines	x 4, COIL ON PLUG						9.6452	C10		

1.6 DIG-T	Petrol	140	06/10->	MR16DDT

Engine	Information	A10	A20	A40	A50	A70	C10 - C30		C20	E01
All engines	x 4, COIL ON PLUG						9.6451	C10		

1.6 DIG-T 4x4	Petrol	140	06/10->	MR16DDT

Engine	Information	A10	A20	A40	A50	A70	C10 - C30		C20	E01
All engines	x 4, COIL ON PLUG						9.6451	C10		

1.6 DIG-T NISMO	Petrol	147	03/13-07/14	MR16DDT

Engine	Information	A10	A20	A40	A50	A70	C10 - C30		C20	E01
All engines	x 4, COIL ON PLUG						9.6451	C10		

1.6 DIG-T NISMO 4x4	Petrol	147	02/13-07/14	MR16DDT

Engine	Information	A10	A20	A40	A50	A70	C10 - C30		C20	E01
All engines	x 4, COIL ON PLUG						9.6451	C10		

1.6 DIG-T NISMO RS	Petrol	160	08/14->	MR16DDT

Engine	Information	A10	A20	A40	A50	A70	C10 - C30		C20	E01
All engines	x 4, COIL ON PLUG						9.6451	C10		

1.6 DIG-T NISMO RS 4x4	Petrol	157	08/14->	MR16DDT

Engine	Information	A10	A20	A40	A50	A70	C10 - C30		C20	E01
All engines	x 4, COIL ON PLUG						9.6451	C10		

1.6 LPG	Petrol/ Liquified Petro-leum Gas (LPG)	80	09/18->	HR16DE

Engine	Information	A10	A20	A40	A50	A70	C10 - C30		C20	E01
All engines	x 4, COIL ON PLUG						9.6452	C10		

1.6 LPG	Petrol/ Liquified Petro-leum Gas (LPG)	85	01/12->	HR16DE

Engine	Information	A10	A20	A40	A50	A70	C10 - C30		C20	E01
All engines	x 4, COIL ON PLUG						9.6452	C10		

CVTC	Petrol	86	03/13->	HR16DE

Engine	Information	A10	A20	A40	A50	A70	C10 - C30		C20	E01
All engines	x 4, COIL ON PLUG						9.6452	C10		

KUBISTAR

1.2	Petrol	44	08/03->	D7F 726, D7F 744, D7F 764, D7F726

Engine	Information	A10	A20	A40	A50	A70	C10 - C30		C20	E01
Eng. D7F 726, D7F 744, D7F 764							9.6496	C10		4.7230
Eng. D7F726	x 1, VALEO, D.I.S.						9.6496	C10		

1.2 16V	Petrol	55	04/06->	D4F 712, D4F 730

Engine	Information	A10	A20	A40	A50	A70	C10 - C30		C20	E01
Eng. D4F 712	x 4, COIL ON PLUG						9.6319	C10		

A10	CONDENSER	A20	CONTACT SET	A40	DISTRIBUTOR CAP	A50	ROTOR	A70	PICK-UP
C10	COIL	C20	IGNITION MODULE	C30	ELECTRONIC IGNITION KIT	E01	IGNITION CABLE SET		

The present application list is a brief version. For the detailed information about the possibility of installation on a specific vehicle, please refer to our web-catalogue http://catalogo.facet.eu/

Vehicle	alim.	kW	Date	Engine	FUNCTIONS ON THE VEHICLE A10	A20	A40	A50	A70	C10 - C30	C20	E01
1.2 16V	Petrol	55	04/06->	ENGINE D4F 712, D4F 730								
Eng. D4F 730	x 4, COIL ON PLUG									9.6418 C10		
Eng. D4F 712												4.7246
1.2 LPG	LPG	44	10/03-08/05	ENGINE D7F 764								
All engines	x 1, VALEO, D.I.S.									9.6496 C10		
1.4	Petrol	55	08/03-10/09	ENGINE K7J 700, K7J701								
All engines	x 1, VALEO, D.I.S.									9.6496 C10		
Eng. K7J 700												4.7244
1.6 16V	Petrol	70	08/03->	ENGINE K4M 750, K4M 752, K4M 753, K4M753								
Eng. K4M 750, K4M 753	Qty: 4									9.6332 C10		
Eng. K4M 752, K4M753	x 4, BERU, ELDOR, COIL ON PLUG									9.6332 C10		
Eng. K4M 752, K4M753	x 1, VALEO, D.I.S.									9.6496 C10		
LAUREL												
2.0 GL	Petrol	75	11/84-12/85	ENGINE CA20S								
All engines	version Hitachi						2.7957					
MICRA C+C												
1.4 16V	Petrol	65	08/05->	ENGINE CR14DE								
All engines	x 4, COIL ON PLUG									9.6502 C10		
1.6 160 SR	Petrol	81	08/05->	ENGINE HR16DE								
All engines	x 4, COIL ON PLUG									9.6389 C10		
MICRA II												
1.0 i 16V	Petrol	40	08/92-07/00	ENGINE CG10DE								
All engines	->year 28/02/00, version Lucas						2.8104	3.8130				
All engines	->year 31/07/00, 01/03/00 ->, version Hitachi							3.8002				
All engines												4.8608
1.3 i 16V	Petrol	55	08/92-09/00	ENGINE CG13DE								
All engines	->year 28/02/00, version Lucas						2.8104, 2.8105	3.8130				
All engines	01/03/00 ->, version Hitachi							3.8002				
All engines												4.8608
MICRA III												
1.0 16V	Petrol	48	01/03-06/10	ENGINE CG10DE								
All engines	x 4, COIL ON PLUG									9.6502 C10		
1.2	Petrol	66	01/07-06/10	ENGINE CR12DE								
All engines	Qty: 4									9.6502 C10		
1.2	Petrol	80	10/03-07/05	ENGINE CR12DE								
All engines	Qty: 4									9.6502 C10		

A10	CONDENSER	A20	CONTACT SET	A40	DISTRIBUTOR CAP	A50	ROTOR	A70	PICK-UP
C10	COIL	C20	IGNITION MODULE	C30	ELECTRONIC IGNITION KIT	E01	IGNITION CABLE SET		

The present application list is a brief version. For the detailed information about the possibility of installation on a specific vehicle, please refer to our web-catalogue http://catalogo.facet.eu/

Vehicle	alim.	kW	Date	Engine	FUNCTIONS ON THE VEHICLE							
					A10	A20	A40	A50	A70	C10 - C30	C20	E01
1.2	Petrol	81	08/05-06/10	CR12DE								
All engines			Qty: 4							9.6502 C10		
1.2 16V	Petrol	48	01/03-06/10	CG12DE, CR12DE								
All engines			x 4, COIL ON PLUG							9.6502 C10		
1.2 16V	Petrol	59	01/03-06/10	CG12DE, CR12DE								
All engines			x 4, COIL ON PLUG							9.6502 C10		
1.2 LPG	Petrol/ Liquified Petro-leum Gas (LPG)	59	10/02-06/10	CG12DELPG, CR12DE								
All engines			x 4, COIL ON PLUG							9.6502 C10		
1.3	Petrol	60	08/04->	CGA3DE								
All engines			Qty: 4							9.6502 C10		
1.4 16V	Petrol	65	01/03-06/10	CR14DE								
All engines			x 4, COIL ON PLUG							9.6502 C10		
160 SR	Petrol	81	05/05-06/10	HR16DE								
All engines			x 4, COIL ON PLUG							9.6389 C10		
MICRA IV												
1.2	Petrol	56	05/10->	HR12DE								
All engines			no specific info conc. application available, Qty: 3, no specific info conc. application available							9.6452 C10		
All engines			x 3, COIL ON PLUG							9.6452 C10		
1.2	Petrol	58	05/10->	HR12DE								
All engines			no specific info conc. application available, Qty: 3, no specific info conc. application available							9.6452 C10		
1.2	Petrol	59	05/10->	HR12DE								
All engines			->year 01/11/13, 01/12/13 ->, K13K, x 3, EUR/C, COIL ON PLUG --- K13KK, x 3, EUR/C, COIL ON PLUG							9.6452 C10		
1.2 4WD	Petrol	59	05/10->	HR12DE								
All engines			no specific info conc. application available, Qty: 3, no specific info conc. application available							9.6452 C10		
1.2 LPG	Petrol/ Liquified Petro-leum Gas (LPG)	59	05/10-09/15	HR12DE								
All engines			x 3, GROUP C, COIL ON PLUG							9.6452 C10		

A10	CONDENSER	A20	CONTACT SET	A40	DISTRIBUTOR CAP	A50	ROTOR	A70	PICK-UP
C10	COIL	C20	IGNITION MODULE	C30	ELECTRONIC IGNITION KIT	E01	IGNITION CABLE SET		

The present application list is a brief version. For the detailed information about the possibility of installation on a specific vehicle, please refer to our web-catalogue http://catalogo.facet.eu/

Vehicle	alim.	kW	Date	Engine	FUNCTIONS ON THE VEHICLE							
					A10	A20	A40	A50	A70	C10 - C30	C20	E01

MICRA V

				ENGINE
0.9 IG-T	Petrol	66	12/16->	HR09DET

Engine	Information	A10	A20	A40	A50	A70	C10 - C30		C20	E01
All engines	x 3, COIL ON PLUG						9.6513	C10		

				ENGINE
0.9 LPG	Petrol/ Liquified Petro-leum Gas (LPG)	64	03/19->	HR09DET

Engine	Information	A10	A20	A40	A50	A70	C10 - C30		C20	E01
All engines	x 3, COIL ON PLUG						9.6513	C10		

MURANO

				ENGINE
3.5 CVTC 4x4	Petrol	188	03/13-09/14	VQ35DE

Engine	Information	A10	A20	A40	A50	A70	C10 - C30		C20	E01
All engines	x 6, COIL ON PLUG						9.6433	C10		

MURANO II

				ENGINE
3.5	Petrol	191	01/11-09/14	VQ35DE

Engine	Information	A10	A20	A40	A50	A70	C10 - C30		C20	E01
All engines	Qty: 6						9.6433	C10		

				ENGINE
3.5	Petrol	195	11/07-09/14	VQ35DE

Engine	Information	A10	A20	A40	A50	A70	C10 - C30		C20	E01
All engines	Qty: 6						9.6433	C10		
All engines	x 6, COIL ON PLUG						9.6433	C10		

				ENGINE
3.5 4x4	Petrol	183	12/10-09/14	VQ35DE

Engine	Information	A10	A20	A40	A50	A70	C10 - C30		C20	E01
All engines	x 6, COIL ON PLUG						9.6433	C10		

				ENGINE
3.5 4x4	Petrol	188	10/08-09/14	VQ35DE

Engine	Information	A10	A20	A40	A50	A70	C10 - C30		C20	E01
All engines	x 6, COIL ON PLUG						9.6433	C10		

				ENGINE
3.5 4x4	Petrol	191	12/09-09/14	VQ35DE

Engine	Information	A10	A20	A40	A50	A70	C10 - C30		C20	E01
All engines	x 6, COIL ON PLUG						9.6433	C10		

				ENGINE
3.5 4x4	Petrol	195	11/07-09/14	VQ35DE

Engine	Information	A10	A20	A40	A50	A70	C10 - C30		C20	E01
All engines	Qty: 6						9.6433	C10		
All engines	x 6, COIL ON PLUG						9.6433	C10		

				ENGINE
3.5 4x4	Petrol	198	09/08-12/10	VQ35DE

Engine	Information	A10	A20	A40	A50	A70	C10 - C30		C20	E01
All engines	Qty: 6						9.6433	C10		

MURANO III

				ENGINE
2.5 HEV ALL MODE 4x4-i	Petrol/ Electric	172	01/16->	QR25DER

Engine	Information	A10	A20	A40	A50	A70	C10 - C30		C20	E01
All engines	x 4, COIL ON PLUG						9.6452	C10		

				ENGINE
3.5 V6	Petrol	183	01/16->	VQ35DE

Engine	Information	A10	A20	A40	A50	A70	C10 - C30		C20	E01
All engines	x 6, COIL ON PLUG						9.6433	C10		

A10	CONDENSER	A20	CONTACT SET	A40	DISTRIBUTOR CAP	A50	ROTOR	A70	PICK-UP
C10	COIL	C20	IGNITION MODULE	C30	ELECTRONIC IGNITION KIT	E01	IGNITION CABLE SET		

The present application list is a brief version. For the detailed information about the possibility of installation on a specific vehicle, please refer to our web-catalogue http://catalogo.facet.eu/

Vehicle	alim.	kW	Date	Engine	FUNCTIONS ON THE VEHICLE A10	A20	A40	A50	A70	C10 - C30	C20	E01
3.5 V6 ALL MODE 4x4-i	Petrol	183	01/16->	VQ35DE								
Engine: All engines — Information: x 6, COIL ON PLUG										9.6433 C10		
3.5 V6 ALL MODE 4x4-i	Petrol	188	10/14->	VQ35DE								
Engine: All engines — Information: Qty: 6										9.6433 C10		
3.5 V6 ALL MODE 4x4-i	Petrol	191	01/16->	VQ35DE								
Engine: All engines — Information: Qty: 6										9.6433 C10		
NAVARA I												
2.4	Petrol	91	06/92-02/97	Z24i								
Engine: All engines — Information: version Mitsubishi							2.8322/14	3.8330				
NAVARA III												
2.5	Petrol	122	01/15->	QR25DE								
Engine: All engines — Information: Qty: 4										9.6452 C10		
2.5	Petrol	124	07/14->	QR25DE								
Engine: All engines — Information: Qty: 4										9.6452 C10		
2.5 DDTi	Diesel	120	01/15->	YD25DDTi								
Engine: All engines — Information: Qty: 4										9.6452 C10		
NOTE I												
1.4	Petrol	65	03/06-06/12	CR14DE								
Engine: All engines — Information: x 4, COIL ON PLUG										9.6502 C10		
1.4 LPG	Petrol/ Liquified Petro-leum Gas (LPG)	65	01/06-08/13	CR14DE								
Engine: All engines — Information: x 4, COIL ON PLUG										9.6502 C10		
1.6	Petrol	81	03/06-06/12	HR16DE								
Engine: All engines — Information: x 4, COIL ON PLUG										9.6389 C10		
NOTE II												
1.2	Petrol	58	06/13->	HR12DE								
Engine: All engines — Information: Qty: 3										9.6452 C10		
1.2	Petrol	59	06/13->	HR12DE								
Engine: All engines — Information: x 3, COIL ON PLUG										9.6452 C10		
1.2 4WD	Petrol	59	06/13->	HR12DE								
Engine: All engines — Information: Qty: 3										9.6452 C10		

A10	CONDENSER	A20	CONTACT SET	A40	DISTRIBUTOR CAP	A50	ROTOR	A70	PICK-UP
C10	COIL	C20	IGNITION MODULE	C30	ELECTRONIC IGNITION KIT	E01	IGNITION CABLE SET		

The present application list is a brief version. For the detailed information about the possibility of installation on a specific vehicle, please refer to our web-catalogue http://catalogo.facet.eu/

Vehicle	alim.	kW	Date	Engine	FUNCTIONS ON THE VEHICLE A10	A20	A40	A50	A70	C10 - C30	C20	E01
1.2 LPG	LPG	56	03/15->	HR12DE								

Engine	Information	A10	A20	A40	A50	A70	C10 - C30	C20	E01
All engines	x 3, COIL ON PLUG						9.6452 C10		

NP300

2.5 i	Petrol	0	06/14->	QR25DE

Engine	Information	A10	A20	A40	A50	A70	C10 - C30	C20	E01
All engines	Qty: 4						9.6452 C10		

NV200 / EVALIA

2.0	Petrol	101	07/10->	MR20DE

Engine	Information	A10	A20	A40	A50	A70	C10 - C30	C20	E01
All engines	->year 15/12/13, Qty: 4						9.6452 C10		

NX1600

1.6 [USA]	Petrol	0	01/87-12/90	E16

Engine	Information	A10	A20	A40	A50	A70	C10 - C30	C20	E01
All engines	version Mitsubishi			2.8322/14	3.8331/10				

1.6i [USA]	Petrol	0	01/88-12/92	GA16, GA16DE

Engine	Information	A10	A20	A40	A50	A70	C10 - C30	C20	E01
All engines	version Hitachi			2.7946	3.7970				

PATHFINDER IV

2.5 Hybrid	Petrol/ Electric	188	10/13->	QR25DER

Engine	Information	A10	A20	A40	A50	A70	C10 - C30	C20	E01
All engines	Qty: 4						9.6452 C10		

2.5 Hybrid 4WD	Petrol/ Electric	172	11/14->	QR25DER

Engine	Information	A10	A20	A40	A50	A70	C10 - C30	C20	E01
All engines	x 4, COIL ON PLUG						9.6452 C10		

2.5 Hybrid 4WD	Petrol/ Electric	188	10/13->	QR25DER

Engine	Information	A10	A20	A40	A50	A70	C10 - C30	C20	E01
All engines	Qty: 4						9.6452 C10		
All engines	x 4, COIL ON PLUG						9.6452 C10		

3.5 4WD	Petrol	183	08/14->	VQ35DE

Engine	Information	A10	A20	A40	A50	A70	C10 - C30	C20	E01
All engines	x 6, COIL ON PLUG						9.6433 C10		

3.5 4WD	Petrol	194	09/12->	VQ35DE

Engine	Information	A10	A20	A40	A50	A70	C10 - C30	C20	E01
All engines	Qty: 6						9.6433 C10		

PATROL GR I

4.2 Cat	Petrol	121	11/88-02/98	TB42E

Engine	Information	A10	A20	A40	A50	A70	C10 - C30	C20	E01
All engines	version Mitsubishi			2.8322/26					

PATROL III

2.8	Petrol	88	07/80-08/88	L28

Engine	Information	A10	A20	A40	A50	A70	C10 - C30	C20	E01
All engines	version Hitachi		1.4456HDV						

2.8	Petrol	89	07/80-08/88	L28

Engine	Information	A10	A20	A40	A50	A70	C10 - C30	C20	E01
All engines	version Hitachi		1.4456HDV						

A10	CONDENSER	A20	CONTACT SET	A40	DISTRIBUTOR CAP	A50	ROTOR	A70	PICK-UP
C10	COIL	C20	IGNITION MODULE	C30	ELECTRONIC IGNITION KIT	E01	IGNITION CABLE SET		

The present application list is a brief version. For the detailed information about the possibility of installation on a specific vehicle, please refer to our web-catalogue http://catalogo.facet.eu/

Vehicle	alim.	kW	Date	Engine	FUNCTIONS ON THE VEHICLE							
					A10	A20	A40	A50	A70	C10 - C30	C20	E01
PICK UP I												
				ENGINE								
2.4 [USA]	Petrol	0	01/85-12/89	Z24i								
Engine	Information											
All engines	version Hitachi						2.7940	3.7966				
				ENGINE								
2.4 i [USA]	Petrol	0	01/89->	KA24E								
Engine	Information											
All engines	version Hitachi						2.7946	3.7970				
All engines	version Mitsubishi						2.8322/14	3.8331/10				
				ENGINE								
2.4 i 12V	Petrol	91	04/92-02/98	KA24E								
Engine	Information											
All engines	version HITACHI, ->year 01/10/95						2.7946	3.7970				
All engines	version HITACHI, 01/10/95 ->						2.7989					
All engines	version MITSUBISHI, ->year 01/10/95						2.8322/14	3.8331/10				
				ENGINE								
2.4 i 12V 4WD	Petrol	93	04/92-02/98	KA24E								
Engine	Information											
All engines	version HITACHI, ->year 01/10/95						2.7946	3.7970				
All engines	version HITACHI, 01/10/95 ->						2.7989					
All engines	version MITSUBISHI, ->year 01/10/95						2.8322/14	3.8331/10				
PICK UP II												
				ENGINE								
2.4 i	Petrol	88	02/98-04/05	KA24E								
Engine	Information											
All engines	version Hitachi						2.7989					
All engines												4.9789
				ENGINE								
2.4 i 4WD	Petrol	88	02/98-04/05	KA24E								
Engine	Information											
All engines	version Hitachi						2.7989					
All engines												4.9789
PRAIRIE PRO												
				ENGINE								
2.4 i	Petrol	98	01/90-07/94	KA24E								
Engine	Information											
All engines	version Hitachi							3.7985				
				ENGINE								
2.4 i 4x4	Petrol	98	04/92-07/94	KA24E								
Engine	Information											
All engines	version Hitachi							3.7985				
PRIMASTAR												
				ENGINE								
2.0	Petrol	86	04/06->	F4R 820								
Engine	Information											
All engines	x 4, BERU, COIL ON PLUG									9.6332 C10		
				ENGINE								
2.0	Petrol	88	03/01->	F4R 720, F4R 722, F4R726								
Engine	Information											
All engines	x 4, BERU, COIL ON PLUG									9.6332 C10		
PRIMERA												
				ENGINE								
1.6 LPG	LPG	73	09/96-07/02	QG16DE								
Engine	Information											
All engines	x 4, COIL ON PLUG									9.6457 C10		
				ENGINE								
1.8 LPG	LPG	84	08/99-07/02	QG18DE								
Engine	Information											
All engines	01/10/00 ->, x 4, COIL ON PLUG									9.6457 C10		

A10	CONDENSER	**A20**	CONTACT SET	**A40**	DISTRIBUTOR CAP	**A50**	ROTOR	**A70**	PICK-UP
C10	COIL	**C20**	IGNITION MODULE	**C30**	ELECTRONIC IGNITION KIT	**E01**	IGNITION CABLE SET		

The present application list is a brief version. For the detailed information about the possibility of installation on a specific vehicle, please refer to our web-catalogue http://catalogo.facet.eu/

Vehicle	alim.	kW	Date	Engine	FUNCTIONS ON THE VEHICLE							
					A10	A20	A40	A50	A70	C10 - C30	C20	E01

PRIMERA I

1.6 | Petrol | 66 | 06/90-01/96 | ENGINE: GA16DS

Engine	Information	A10	A20	A40	A50	A70	C10 - C30	C20	E01
All engines	-catalytic converter, version Lucas			2.8101PHT					
All engines	+catalytic converter, version Lucas			2.8103					
All engines	+catalytic converter, version Hitachi				3.7970				
All engines	-catalytic converter, version Hitachi				3.7986				
All engines	->year 31/03/91								4.8609

1.6 | Petrol | 71 | 06/90-01/96 | ENGINE: GA16DS

Engine	Information	A10	A20	A40	A50	A70	C10 - C30	C20	E01
All engines	-catalytic converter, version Lucas			2.8101PHT					
All engines	+catalytic converter, version Lucas			2.8103					
All engines	+catalytic converter, version Hitachi				3.7970				
All engines	-catalytic converter, version Hitachi				3.7986				
All engines	->year 31/03/91								4.8609

1.6 | Petrol | 75 | 06/93-01/96 | ENGINE: GA16DE

Engine	Information	A10	A20	A40	A50	A70	C10 - C30	C20	E01
All engines	version Lucas			2.8105					
All engines	->year 30/09/94								4.9658

1.6 i | Petrol | 66 | 07/90-03/98 | ENGINE: GA16DS

Engine	Information	A10	A20	A40	A50	A70	C10 - C30	C20	E01
All engines	version Hitachi			2.7946	3.7970				
All engines	FOR: (F), FOR: (B), FOR: (I), FOR: (E), FOR: (P), FOR: (GR), version Lucas			2.8101PHT					
All engines	FOR: (F), FOR: (B), FOR: (I), FOR: (E), FOR: (P), FOR: (GR), version Hitachi				3.7986				

1.6 i | Petrol | 75 | 02/91-03/98 | ENGINE: GA16DE

Engine	Information	A10	A20	A40	A50	A70	C10 - C30	C20	E01
All engines	->year 30/04/96, version Hitachi			2.7979					
All engines	01/05/96 ->, version Hitachi			2.7989					
All engines									4.9399

2.0 | Petrol | 105 | 06/90-04/93 | ENGINE: SR20DE

Engine	Information	A10	A20	A40	A50	A70	C10 - C30	C20	E01
All engines	version Lucas			2.8102					
All engines	version Hitachi				3.7985				

2.0 | Petrol | 110 | 07/94-01/98 | ENGINE: SR20DE

Engine	Information	A10	A20	A40	A50	A70	C10 - C30	C20	E01
All engines	->year 30/04/96, version Mitsubishi			2.8322/51					
All engines	01/04/96 ->, version Mitsubishi				3.8331/36				
All engines	01/04/96 ->								4.9411

2.0 16V | Petrol | 85 | 06/90-01/96 | ENGINE: SR20DI

Engine	Information	A10	A20	A40	A50	A70	C10 - C30	C20	E01
All engines	version Lucas			2.8102					
All engines	version Hitachi				3.7985				

2.0 16V 4x4 | Petrol | 85 | 04/91-06/96 | ENGINE: SR20DI

Engine	Information	A10	A20	A40	A50	A70	C10 - C30	C20	E01
All engines	version Lucas			2.8102					
All engines	version Hitachi				3.7985				

2.0 GT | Petrol | 110 | 06/90-01/96 | ENGINE: SR20DE

Engine	Information	A10	A20	A40	A50	A70	C10 - C30	C20	E01
All engines	version Lucas			2.8102					
All engines	version Hitachi				3.7985				

A10	CONDENSER	**A20**	CONTACT SET	**A40**	DISTRIBUTOR CAP	**A50**	ROTOR	**A70**	PICK-UP
C10	COIL	**C20**	IGNITION MODULE	**C30**	ELECTRONIC IGNITION KIT	**E01**	IGNITION CABLE SET		

The present application list is a brief version. For the detailed information about the possibility of installation on a specific vehicle, please refer to our web-catalogue http://catalogo.facet.eu/

Vehicle	alim.	kW	Date	Engine	FUNCTIONS ON THE VEHICLE							
					A10	A20	A40	A50	A70	C10 - C30	C20	E01
2.0 GT 4x4	Petrol	105	03/91-04/93	**SR20DE**								
Engine: All engines	Information: version Lucas						2.8102					
Engine: All engines	Information: version Hitachi							3.7985				
2.0 i	Petrol	85	07/90-03/98	**SR20DI**								
Engine: All engines	Information: version Hitachi						2.7973	3.7985				
2.0 i	Petrol	92	01/95-06/96	**SR20DE**								
Engine: All engines	Information: version Lucas						2.8102					
Engine: All engines	Information: version Hitachi							3.7985				
PRIMERA II												
1.6 16V	Petrol	66	09/96-07/02	**GA16DE**								
Engine: All engines	Information: version Lucas						2.8105	3.8130				
Engine: All engines	Information:											4.9658
1.6 16V	Petrol	73	09/96-07/02	**GA16DE, QG16DE**								
Engine: Eng. GA16DE	Information: version Lucas						2.8105	3.8130				
Engine: Eng. QG16DE	Information: x 4, COIL ON PLUG									9.6457 C10		
Engine: Eng. GA16DE	Information:											4.9658
1.6 16V	Petrol	78	06/96-07/02	**QG16DE**								
Engine: All engines	Information: x 4, COIL ON PLUG									9.6457 C10		
1.6 16V	Petrol	81	04/98-01/02	**GA16DE**								
Engine: All engines	Information: version Lucas						2.8105	3.8130				
Engine: All engines	Information:											4.9658
1.6 16V LPG	Petrol/ Liquified Petro-leum Gas (LPG)	78	09/00-07/02	**QG16DE**								
Engine: All engines	Information: x 4, COIL ON PLUG									9.6457 C10		
1.8 16V	Petrol	84	08/99-07/02	**QG18DE**								
Engine: All engines	Information: 01/10/00 ->, x 4, COIL ON PLUG									9.6457 C10		
1.8 16V LPG	Petrol/ Liquified Petro-leum Gas (LPG)	84	08/99-12/01	**QG18DE**								
Engine: All engines	Information: 01/10/00 ->, x 4, COIL ON PLUG									9.6457 C10		
2.0 16V	Petrol	103	08/99-07/02	**SR20DE**								
Engine: All engines	Information: version Lucas						2.8102					
Engine: All engines	Information: version Hitachi							3.7985				
Engine: All engines	Information: ->year 30/09/00, version Mitsubishi							3.8331/36				
Engine: All engines	Information:											4.9411

A10	CONDENSER	**A20**	CONTACT SET	**A40**	DISTRIBUTOR CAP	**A50**	ROTOR	**A70**	PICK-UP
C10	COIL	**C20**	IGNITION MODULE	**C30**	ELECTRONIC IGNITION KIT	**E01**	IGNITION CABLE SET		

The present application list is a brief version. For the detailed information about the possibility of installation on a specific vehicle, please refer to our web-catalogue http://catalogo.facet.eu/

Vehicle	alim.	kW	Date	Engine	FUNCTIONS ON THE VEHICLE A10	A20	A40	A50	A70	C10 - C30	C20	E01
2.0 16V	Petrol	110	09/96-07/02	SR20DE								

Engine	Information	A10	A20	A40	A50	A70	C10 - C30	C20	E01
All engines	->year 30/09/00, version Mitsubishi				3.8331/36				
All engines									4.9411

2.0 16V	Petrol	85	06/96-07/02	SR20De								

Engine	Information	A10	A20	A40	A50	A70	C10 - C30	C20	E01
All engines	->year 30/09/00, version Mitsubishi				3.8331/36				
All engines									4.9411

2.0 16V	Petrol	96	09/96-07/02	SR20DE								

Engine	Information	A10	A20	A40	A50	A70	C10 - C30	C20	E01
All engines	->year 30/09/00, version Mitsubishi				3.8331/36				
All engines									4.9411

PRIMERA III

1.6	Petrol	78	03/02-08/08	QG16DE								

Engine	Information	A10	A20	A40	A50	A70	C10 - C30	C20	E01
All engines	x 4, COIL ON PLUG						9.6457 C10		

1.6	Petrol	80	01/02-04/06	QG16DE								

Engine	Information	A10	A20	A40	A50	A70	C10 - C30	C20	E01
All engines	x 4, COIL ON PLUG						9.6457 C10		

1.6 Visia	Petrol	80	01/02-04/06	QG16DE								

Engine	Information	A10	A20	A40	A50	A70	C10 - C30	C20	E01
All engines	x 4, COIL ON PLUG						9.6457 C10		

1.8	Petrol	85	03/02-10/08	QG18DE								

Engine	Information	A10	A20	A40	A50	A70	C10 - C30	C20	E01
All engines	x 4, COIL ON PLUG						9.6457 C10		

1.8 LPG	Petrol/ Liquified Petro-leum Gas (LPG)	85	03/02->	QG18DE								

Engine	Information	A10	A20	A40	A50	A70	C10 - C30	C20	E01
All engines	x 4, COIL ON PLUG						9.6457 C10		

PULSAR

1.2 DIG-T	Petrol	85	10/14->	HRA2DDT								

Engine	Information	A10	A20	A40	A50	A70	C10 - C30	C20	E01
All engines	Pulsar, x 4, COIL ON PLUG						9.6513 C10		

1.6	Petrol	0	01/84-12/86	E16								

Engine	Information	A10	A20	A40	A50	A70	C10 - C30	C20	E01
All engines	version Hitachi			2.7957	3.7952				

1.6 [USA]	Petrol	0	01/82-12/83	E16								

Engine	Information	A10	A20	A40	A50	A70	C10 - C30	C20	E01
All engines	version Hitachi			2.7957	3.7952				

1.6 DIG-T	Petrol	140	02/15->	MR16DDT								

Engine	Information	A10	A20	A40	A50	A70	C10 - C30	C20	E01
All engines	Pulsar, x 4, COIL ON PLUG						9.6451 C10		

PULSAR NX

1.6 [USA]	Petrol	0	01/86->	E16								

Engine	Information	A10	A20	A40	A50	A70	C10 - C30	C20	E01
All engines	version Mitsubishi			2.8322/14	3.8331/10				

A10	CONDENSER	A20	CONTACT SET	A40	DISTRIBUTOR CAP	A50	ROTOR	A70	PICK-UP
C10	COIL	C20	IGNITION MODULE	C30	ELECTRONIC IGNITION KIT	E01	IGNITION CABLE SET		

The present application list is a brief version. For the detailed information about the possibility of installation on a specific vehicle, please refer to our web-catalogue http://catalogo.facet.eu/

Vehicle	alim.	kW	Date	Engine	FUNCTIONS ON THE VEHICLE A10	A20	A40	A50	A70	C10 - C30	C20	E01

QASHQAI / QASHQAI +2

				ENGINE
1.6 CVTC	Petrol	86	03/13-04/14	HR16DE

Engine	Information	A10	A20	A40	A50	A70	C10 - C30		C20	E01
All engines	x 4, COIL ON PLUG						9.6389	C10		

				ENGINE
2.0	Petrol	104	03/13-04/14	MR20DE

Engine	Information	A10	A20	A40	A50	A70	C10 - C30		C20	E01
All engines	x 4, COIL ON PLUG						9.6452	C10		

				ENGINE
2.0 Trazione integrale	Petrol	104	03/13-04/14	MR20DE

Engine	Information	A10	A20	A40	A50	A70	C10 - C30		C20	E01
All engines	x 4, COIL ON PLUG						9.6452	C10		

QASHQAI I

				ENGINE
1.6	Petrol	84	02/07-12/13	HR16DE

Engine	Information	A10	A20	A40	A50	A70	C10 - C30		C20	E01
All engines	x 4, COIL ON PLUG						9.6389	C10		

				ENGINE
1.6	Petrol	86	11/10-12/13	HR16DE

Engine	Information	A10	A20	A40	A50	A70	C10 - C30		C20	E01
All engines	x 4, COIL ON PLUG						9.6389	C10		

				ENGINE
1.6 LPG	Petrol/ Liquified Petroleum Gas (LPG)	86	11/10-12/13	HR16DE

Engine	Information	A10	A20	A40	A50	A70	C10 - C30		C20	E01
All engines	x 4, -start-stop function, COIL ON PLUG						9.6389	C10		
All engines	x 4, +start-stop function, COIL ON PLUG						9.6452	C10		

				ENGINE
2.0	Petrol	102	02/07-12/13	MR20DE

Engine	Information	A10	A20	A40	A50	A70	C10 - C30		C20	E01
All engines	Qty: 4						9.6452	C10		

				ENGINE
2.0	Petrol	103	01/10-04/14	MR20DE

Engine	Information	A10	A20	A40	A50	A70	C10 - C30		C20	E01
All engines	x 4, COIL ON PLUG						9.6452	C10		

				ENGINE
2.0	Petrol	104	02/07-12/13	MR20DE

Engine	Information	A10	A20	A40	A50	A70	C10 - C30		C20	E01
All engines	->year 01/03/07, x 4, COIL ON PLUG						9.6389	C10		
All engines	01/04/07 ->, x 4, COIL ON PLUG --- x 4, COIL ON PLUG						9.6452	C10		

				ENGINE
2.0 Trazione integrale	Petrol	102	02/07-12/13	MR20DE

Engine	Information	A10	A20	A40	A50	A70	C10 - C30		C20	E01
All engines	Qty: 4						9.6452	C10		

				ENGINE
2.0 Trazione integrale	Petrol	103	01/10-04/14	MR20DE

Engine	Information	A10	A20	A40	A50	A70	C10 - C30		C20	E01
All engines	x 4, COIL ON PLUG						9.6452	C10		

				ENGINE
2.0 Trazione integrale	Petrol	104	02/07-12/13	MR20DE

Engine	Information	A10	A20	A40	A50	A70	C10 - C30		C20	E01
All engines	->year 01/03/07, x 4, COIL ON PLUG						9.6389	C10		
All engines	01/04/07 ->, x 4, COIL ON PLUG --- x 4, COIL ON PLUG						9.6452	C10		

A10	CONDENSER	A20	CONTACT SET	A40	DISTRIBUTOR CAP	A50	ROTOR	A70	PICK-UP
C10	COIL	C20	IGNITION MODULE	C30	ELECTRONIC IGNITION KIT	E01	IGNITION CABLE SET		

The present application list is a brief version. For the detailed information about the possibility of installation on a specific vehicle, please refer to our web-catalogue http://catalogo.facet.eu/

Vehicle	alim.	kW	Date	Engine	FUNCTIONS ON THE VEHICLE							
					A10	A20	A40	A50	A70	C10 - C30	C20	E01
QASHQAI II												
1.2 DIG-T	Petrol	85	11/13->	HR12DDT, HRA2DDT								
Eng. HR12DDT	Qty: 4									9.6513 C10		
Eng. HRA2DDT	x 4, COIL ON PLUG									9.6513 C10		
1.6 DIG-T	Petrol	120	10/14->	MR16DDT								
All engines	x 4, COIL ON PLUG									9.6451 C10		
2.0	Petrol	106	06/14->	MR20DD								
All engines	x 4, COIL ON PLUG									9.6451 C10		
2.0 ALL MODE 4x4-i	Petrol	106	10/15->	MR20DD								
All engines	x 4, COIL ON PLUG									9.6451 C10		
SENTRA III												
1.6i [USA]	Petrol	0	01/90-12/92	GA16DE								
All engines	version Hitachi						2.7946	3.7970				
2.0i [USA]	Petrol	0	01/90->	SR20DE								
All engines	version Hitachi						2.7973	3.7985				
SENTRA IV												
1.6i	Petrol	79	01/95-12/97	GA16DE								
All engines	version Hitachi						2.7989					
SENTRA VII												
1.6 DIG-T	Petrol	0	07/12->	MR16DDT								
All engines	Qty: 4									9.6451 C10		
1.8	Petrol	96	08/12->	MRA8DE								
All engines	Qty: 4									9.6452 C10		
1.8 [TWN]	Petrol	0	08/13->	MRA8DE								
All engines	Qty: 4									9.6452 C10		
1.8 i	Petrol	0	07/12->	MRA8DE								
All engines	B17T, B17Z, Qty: 4									9.6452 C10		
SERENA												
1.6	Petrol	71	02/93-09/01	GA16DE								
All engines	version Mitsubishi							3.8331/18				
1.6	Petrol	75	09/94-08/00	GA16DE								
All engines	version Mitsubishi							3.8331/18				

A10	CONDENSER	A20	CONTACT SET	A40	DISTRIBUTOR CAP	A50	ROTOR	A70	PICK-UP
C10	COIL	C20	IGNITION MODULE	C30	ELECTRONIC IGNITION KIT	E01	IGNITION CABLE SET		

The present application list is a brief version. For the detailed information about the possibility of installation on a specific vehicle, please refer to our web-catalogue http://catalogo.facet.eu/

Vehicle	alim.	kW	Date	Engine	FUNCTIONS ON THE VEHICLE A10	A20	A40	A50	A70	C10 - C30	C20	E01
2.0	Petrol	93	11/92-09/01	SR20DE								
Engine: All engines	Information: version Mitsubishi							3.8331/18				
STANZA												
2.4i [USA]	Petrol	0	01/92->	KA24DE								
Engine: All engines										9.6196 C10		
SUNNY II												
1.0 L	Petrol	37	07/86-09/90	E10S								
Engine: All engines	Information: 01/01/89 ->, version Hitachi						2.7946					
All engines	->year 31/12/88, version Hitachi						2.7957					
All engines	01/12/86 ->, version Hitachi							3.7986				
1.3	Petrol	44	06/86-10/91	E13S								
Engine: All engines	Information: version Hitachi						2.7957					
All engines	01/12/86 ->, version Hitachi							3.7986				
1.4 LX	Petrol	55	10/88-08/91	GA14S								
Engine: All engines	Information: version Lucas						2.8101PHT					
All engines	version Mitsubishi						2.8322/36	3.8330				
All engines	version Hitachi							3.7986				
1.5	Petrol	52	06/86-10/88	E15S								
Engine: All engines	Information: version Hitachi						2.7957					
All engines	01/12/86 ->, version Hitachi							3.7986				
1.6	Petrol	62	06/86-10/88	E16S								
Engine: All engines	Information: version Hitachi						2.7957					
All engines	01/12/86 ->, version Hitachi							3.7986				
1.6 i	Petrol	54	06/86-10/90	E16i								
Engine: All engines	Information: 01/09/88 ->, version Mitsubishi						2.8322/14					
All engines	version Mitsubishi							3.8331/10				
1.6 i 12V	Petrol	66	06/86-06/91	GA16i								
Engine: All engines	Information: version Hitachi						2.7946	3.7970				
All engines	version Mitsubishi						2.8322/14	3.8331/10				
1.6 i 4x4	Petrol	54	06/86-10/90	E16i								
Engine: All engines	Information: 01/09/88 ->, version Mitsubishi						2.8322/14					
All engines	version Mitsubishi							3.8331/10				
SUNNY III												
1.4	Petrol	60	10/90-06/95	GA14DS								
Engine: All engines	Information: 01/10/92 ->, version Lucas						2.8101PHT					
All engines	->year 01/10/92, version Mitsubishi						2.8322/14	3.8331/10				
All engines	01/10/92 ->, version Mitsubishi						2.8322/55	3.8331/31				
All engines	01/10/92 ->, version Hitachi							3.7986				

A10	CONDENSER	A20	CONTACT SET	A40	DISTRIBUTOR CAP	A50	ROTOR	A70	PICK-UP
C10	COIL	C20	IGNITION MODULE	C30	ELECTRONIC IGNITION KIT	E01	IGNITION CABLE SET		

The present application list is a brief version. For the detailed information about the possibility of installation on a specific vehicle, please refer to our web-catalogue http://catalogo.facet.eu/

Vehicle	alim.	kW	Date	Engine	FUNCTIONS ON THE VEHICLE							
					A10	A20	A40	A50	A70	C10 - C30	C20	E01
1.4 i	Petrol	55	10/90-05/95	GA14DE, GA14DS								
Eng. GA14DE	version Hitachi						2.7979					
Eng. GA14DS	01/10/92 ->, version Lucas						2.8101PHT					
Eng. GA14DS	->year 01/10/92, version Mitsubishi						2.8322/14	3.8331/10				
Eng. GA14DS	01/10/92 ->, version Mitsubishi						2.8322/55	3.8331/31				
Eng. GA14DS	01/10/92 ->, version Hitachi							3.7986				
1.4 i 16V	Petrol	64	10/90-06/95	GA14DE								
All engines	version Hitachi						2.7979					
1.6 16V 4x4	Petrol	66	11/90-05/95	GA16DS								
All engines	version Hitachi						2.7946					
All engines	version Lucas						2.8101PHT					
All engines	version Hitachi, no specific info conc. application available							3.7970, 3.7986				
1.6 i	Petrol	66	10/90-03/00	GA16DE, GA16DS								
All engines	->year 01/10/92, version Hitachi						2.7946	3.7970				
Eng. GA16DE	version Hitachi						2.7979					
Eng. GA16DE	->year 30/04/98, Traveller, version Hitachi						2.7989					
All engines	01/10/92 ->, version Lucas						2.8101PHT					
All engines	01/10/92 ->, version Mitsubishi						2.8322/55	3.8331/31				
All engines	01/10/92 ->, version Hitachi							3.7986				
Eng. GA16DE												4.9399
1.6 i	Petrol	82	10/90-05/95	GA16DE								
All engines	version Hitachi						2.7979					
All engines												4.9399
1.6 i 16V	Petrol	75	10/92-05/95	GA16DE								
All engines	version Hitachi						2.7979					
All engines												4.9399
1.6 i 16V 4WD	Petrol	66	10/90-05/95	GA16DS								
All engines	version Hitachi						2.7946					
All engines	version Hitachi, no specific info conc. application available							3.7970, 3.7986				
1.6 i 16V 4WD	Petrol	75	10/92-06/95	GA16DE								
All engines	version Hitachi						2.7946					
All engines	version Hitachi, no specific info conc. application available							3.7970, 3.7986				
1.6 i 16V 4x4	Petrol	75	10/92-03/00	GA16DE								
All engines	version Hitachi						2.7946					
All engines	version Hitachi, no specific info conc. application available							3.7970, 3.7986				
2.0 GTI 16V	Petrol	105	10/90-05/95	SR20DE								
All engines	version Hitachi						2.7973	3.7985				

A10	CONDENSER	A20	CONTACT SET	A40	DISTRIBUTOR CAP	A50	ROTOR	A70	PICK-UP
C10	COIL	C20	IGNITION MODULE	C30	ELECTRONIC IGNITION KIT	E01	IGNITION CABLE SET		

The present application list is a brief version. For the detailed information about the possibility of installation on a specific vehicle, please refer to our web-catalogue http://catalogo.facet.eu/

Vehicle	alim.	kW	Date	Engine	FUNCTIONS ON THE VEHICLE A10	A20	A40	A50	A70	C10 - C30	C20	E01
2.0 GTI-R 4x4	Petrol	162	10/90-05/95	**SR20DET**								

Engine	Information	A10	A20	A40	A50	A70	C10 - C30	C20	E01
All engines	version Hitachi			2.7973	3.7985				

SYLPHY III

1.6 DIG-T	Petrol	0	07/12->	**MR16DDT**

Engine	Information	A10	A20	A40	A50	A70	C10 - C30	C20	E01
All engines	Qty: 4						9.6451 C10		

1.8	Petrol	96	08/12->	**MRA8DE**

Engine	Information	A10	A20	A40	A50	A70	C10 - C30	C20	E01
All engines	Qty: 4						9.6452 C10		

TEANA II

2.5	Petrol	134	07/08-09/13	**VQ25DE**

Engine	Information	A10	A20	A40	A50	A70	C10 - C30	C20	E01
All engines	x 6, COIL ON PLUG						9.6433 C10		

2.5 FOUR Trazione integrale	Petrol	123	06/08-12/12	**QR25DE**

Engine	Information	A10	A20	A40	A50	A70	C10 - C30	C20	E01
All engines	x 4, COIL ON PLUG						9.6452 C10		

3.5	Petrol	183	07/08-09/13	**VQ35DE**

Engine	Information	A10	A20	A40	A50	A70	C10 - C30	C20	E01
All engines	x 6, COIL ON PLUG						9.6433 C10		

TEANA III

2.5	Petrol	127	09/13->	**QR25DE**

Engine	Information	A10	A20	A40	A50	A70	C10 - C30	C20	E01
All engines	x 4, COIL ON PLUG						9.6452 C10		

3.5	Petrol	0	01/14->	**VQ35DE**

Engine	Information	A10	A20	A40	A50	A70	C10 - C30	C20	E01
All engines	Qty: 6						9.6433 C10		

3.5 CVTC	Petrol	183	01/14->	**VQ35DE**

Engine	Information	A10	A20	A40	A50	A70	C10 - C30	C20	E01
All engines	x 6, COIL ON PLUG						9.6433 C10		

TERRANO I

2.4 i 4WD	Petrol	76	10/87-02/93	**Z24i**

Engine	Information	A10	A20	A40	A50	A70	C10 - C30	C20	E01
All engines	version Hitachi			2.7940	3.7966				

TERRANO II

2.4 4WD	Petrol	85	05/96-01/02	**KA24E**

Engine	Information	A10	A20	A40	A50	A70	C10 - C30	C20	E01
All engines	->year 01/05/96, version Hitachi			2.7946					
All engines	01/05/96 ->, version Hitachi			2.7989					
All engines	no specific info conc. application available, version Hitachi				3.7970, 3.8002				
All engines	01/05/96 ->								4.9789

2.4 4WD	Petrol	87	05/96-09/07	**KA24E**

Engine	Information	A10	A20	A40	A50	A70	C10 - C30	C20	E01
All engines	->year 01/05/96, version Hitachi			2.7946					
All engines	01/05/96 ->, version Hitachi			2.7989					
All engines	01/10/99 ->, ->year 01/02/02, version Hitachi				3.7970				
All engines	01/03/02 ->, version Hitachi				3.8002				
All engines	01/05/96 ->								4.9789

A10	CONDENSER	**A20**	CONTACT SET	**A40**	DISTRIBUTOR CAP	**A50**	ROTOR	**A70**	PICK-UP
C10	COIL	**C20**	IGNITION MODULE	**C30**	ELECTRONIC IGNITION KIT	**E01**	IGNITION CABLE SET		

The present application list is a brief version. For the detailed information about the possibility of installation on a specific vehicle, please refer to our web-catalogue http://catalogo.facet.eu/

Vehicle	alim.	kW	Date	Engine	FUNCTIONS ON THE VEHICLE A10	A20	A40	A50	A70	C10 - C30	C20	E01
2.4 i 12V 4WD	Petrol	91	02/93-12/97	**KA24E**								

Engine	Information	A10	A20	A40	A50	A70	C10 - C30	C20	E01
All engines	->year 01/05/96, version Hitachi			2.7946					
All engines	01/05/96 ->, version Hitachi			2.7989					
All engines	->year 01/05/96, 01/10/99 ->, ->year 01/02/02, version Hitachi				3.7970				
All engines	01/03/02 ->, version Hitachi				3.8002				
All engines	01/05/96 ->								4.9789

TERRANO III

1.6	Petrol	75	03/14->	**K4M606, K4M690**

Engine	Information	A10	A20	A40	A50	A70	C10 - C30	C20	E01
All engines	x 4, COIL ON PLUG						9.6332 C10		

1.6	Petrol	77	09/13->	**K4M**

Engine	Information	A10	A20	A40	A50	A70	C10 - C30	C20	E01
All engines							9.6332 C10		

1.6	Petrol	84	12/15->	**H4M**

Engine	Information	A10	A20	A40	A50	A70	C10 - C30	C20	E01
All engines	x 4, COIL ON PLUG						9.6513 C10		

1.6 4x4	Petrol	75	03/14->	**K4M606, K4M690**

Engine	Information	A10	A20	A40	A50	A70	C10 - C30	C20	E01
All engines	x 4, COIL ON PLUG						9.6332 C10		

1.6 4x4	Petrol	84	12/15->	**H4M**

Engine	Information	A10	A20	A40	A50	A70	C10 - C30	C20	E01
All engines	x 4, COIL ON PLUG						9.6513 C10		

2.0	Petrol	0	09/13->	**F4R**

Engine	Information	A10	A20	A40	A50	A70	C10 - C30	C20	E01
All engines	Qty: 4						9.6332 C10		

2.0	Petrol	98	03/14->	**F4R**

Engine	Information	A10	A20	A40	A50	A70	C10 - C30	C20	E01
All engines	x 4, BERU, COIL ON PLUG						9.6332 C10		

2.0 4x4	Petrol	105	12/15->	**F4R**

Engine	Information	A10	A20	A40	A50	A70	C10 - C30	C20	E01
All engines	x 4, BERU, COIL ON PLUG						9.6332 C10		

2.0 4x4	Petrol	98	03/14->	**F4R**

Engine	Information	A10	A20	A40	A50	A70	C10 - C30	C20	E01
All engines	x 4, BERU, COIL ON PLUG						9.6332 C10		

TIIDA I

1.6	Petrol	81	09/07-12/12	**HR16DE**

Engine	Information	A10	A20	A40	A50	A70	C10 - C30	C20	E01
All engines	x 4, COIL ON PLUG						9.6389 C10		

1.8	Petrol	78	01/07-06/11	**MR18DE**

Engine	Information	A10	A20	A40	A50	A70	C10 - C30	C20	E01
All engines	Qty: 4						9.6389 C10		
All engines	x 4, COIL ON PLUG						9.6389 C10		

1.8	Petrol	93	05/04-12/12	**MR18DE**

Engine	Information	A10	A20	A40	A50	A70	C10 - C30	C20	E01
All engines	Qty: 4						9.6389 C10		
All engines	x 4, COIL ON PLUG						9.6389 C10		

A10	CONDENSER	**A20**	CONTACT SET	**A40**	DISTRIBUTOR CAP	**A50**	ROTOR	**A70**	PICK-UP
C10	COIL	**C20**	IGNITION MODULE	**C30**	ELECTRONIC IGNITION KIT	**E01**	IGNITION CABLE SET		

The present application list is a brief version. For the detailed information about the possibility of installation on a specific vehicle, please refer to our web-catalogue http://catalogo.facet.eu/

Vehicle	alim.	kW	Date	Engine	FUNCTIONS ON THE VEHICLE: A10	A20	A40	A50	A70	C10 - C30	C20	E01

TIIDA II

1.6	Petrol	140	02/13->	ENGINE: MR16DDT

Engine	Information	A10	A20	A40	A50	A70	C10 - C30	C20	E01
All engines	Qty: 4						9.6451 C10		

1.6 [RUS]	Petrol	0	01/15->	ENGINE: HR16DE

Engine	Information	A10	A20	A40	A50	A70	C10 - C30	C20	E01
All engines	Qty: 4						9.6452 C10		

1.6 CVTC	Petrol	86	08/12->	ENGINE: HR16DE

Engine	Information	A10	A20	A40	A50	A70	C10 - C30	C20	E01
All engines	x 4, COIL ON PLUG						9.6452 C10		

1.6 DIG-T	Petrol	0	08/11->	ENGINE: MR16DDT

Engine	Information	A10	A20	A40	A50	A70	C10 - C30	C20	E01
All engines	Qty: 4						9.6451 C10		

1.8	Petrol	96	08/12->	ENGINE: MRA8DE

Engine	Information	A10	A20	A40	A50	A70	C10 - C30	C20	E01
All engines	Qty: 4						9.6452 C10		

URVAN III

2.0	Petrol	64	05/87-05/97	ENGINE: Z20

Engine	Information	A10	A20	A40	A50	A70	C10 - C30	C20	E01
All engines	version Mitsubishi		1.5085	2.8303/1	3.8323				

2.4 i	Petrol	74	05/89-09/93	ENGINE: Z24i

Engine	Information	A10	A20	A40	A50	A70	C10 - C30	C20	E01
All engines	version Hitachi			2.7940	3.7966				

VAN

2.4 [USA]	Petrol	0	01/86-12/89	ENGINE: Z24i

Engine	Information	A10	A20	A40	A50	A70	C10 - C30	C20	E01
All engines	version Hitachi			2.7940	3.7966				

VANETTE II

1.5	Petrol	55	04/87-11/94	ENGINE: A15

Engine	Information	A10	A20	A40	A50	A70	C10 - C30	C20	E01
All engines	version Mitsubishi		1.5085	2.8322/20	3.8323				
All engines	version Hitachi			2.7903					

2.0	Petrol	66	07/87-08/94	ENGINE: Z20S

Engine	Information	A10	A20	A40	A50	A70	C10 - C30	C20	E01
All engines	version Mitsubishi	0.0675/31	1.5085	2.8322/14	3.8330				
All engines	version Hitachi			2.7940	3.7966				

X-TRAIL

2.0	Petrol	106	12/14->	ENGINE: MR20DD

Engine	Information	A10	A20	A40	A50	A70	C10 - C30	C20	E01
All engines	x 4, COIL ON PLUG						9.6451 C10		

2.0 ALL MODE 4x4-i	Petrol	106	12/14->	ENGINE: MR20DD

Engine	Information	A10	A20	A40	A50	A70	C10 - C30	C20	E01
All engines	x 4, COIL ON PLUG						9.6451 C10		

2.5 ALL MODE 4x4-i	Petrol	126	04/16->	ENGINE: QR25DE

Engine	Information	A10	A20	A40	A50	A70	C10 - C30	C20	E01
All engines	x 4, COIL ON PLUG						9.6452 C10		

A10	CONDENSER	A20	CONTACT SET	A40	DISTRIBUTOR CAP	A50	ROTOR	A70	PICK-UP
C10	COIL	C20	IGNITION MODULE	C30	ELECTRONIC IGNITION KIT	E01	IGNITION CABLE SET		

The present application list is a brief version. For the detailed information about the possibility of installation on a specific vehicle, please refer to our web-catalogue http://catalogo.facet.eu/

Vehicle	alim.	kW	Date	Engine	FUNCTIONS ON THE VEHICLE							
					A10	A20	A40	A50	A70	C10 - C30	C20	E01

X-TRAIL II

				ENGINE
2.0	Petrol	102	06/08-02/14	MR20DE

Engine	Information	A10	A20	A40	A50	A70	C10 - C30		C20	E01
All engines	Qty: 4						9.6389	C10		

				ENGINE
2.0 4x4	Petrol	101	06/07-11/13	MR20DE

Engine	Information	A10	A20	A40	A50	A70	C10 - C30		C20	E01
All engines	Qty: 4						9.6389	C10		

				ENGINE
2.0 4x4	Petrol	103	06/08-11/13	MR20DE

Engine	Information	A10	A20	A40	A50	A70	C10 - C30		C20	E01
All engines	x 4, COIL ON PLUG						9.6389	C10		

				ENGINE
2.0 4x4	Petrol	104	06/07-11/13	MR20DE

Engine	Information	A10	A20	A40	A50	A70	C10 - C30		C20	E01
All engines	x 4, COIL ON PLUG						9.6389	C10		

				ENGINE
2.0 FWD	Petrol	103	06/08-11/13	MR20DE

Engine	Information	A10	A20	A40	A50	A70	C10 - C30		C20	E01
All engines	x 4, COIL ON PLUG						9.6389	C10		

				ENGINE
2.0 FWD	Petrol	104	03/07-11/13	MR20DE

Engine	Information	A10	A20	A40	A50	A70	C10 - C30		C20	E01
All engines	x 4, COIL ON PLUG						9.6389	C10		

				ENGINE
2.5	Petrol	124	09/07-11/13	QR25DE

Engine	Information	A10	A20	A40	A50	A70	C10 - C30		C20	E01
All engines	Qty: 4						9.6452	C10		

				ENGINE
2.5 4x4	Petrol	124	06/07-11/13	QR25DE

Engine	Information	A10	A20	A40	A50	A70	C10 - C30		C20	E01
All engines	x 4, COIL ON PLUG						9.6452	C10		

				ENGINE
2.5 4x4	Petrol	132	09/07-07/14	QR25DE

Engine	Information	A10	A20	A40	A50	A70	C10 - C30		C20	E01
All engines	Qty: 4						9.6452	C10		

X-TRAIL III

				ENGINE
1.6 DIG-T	Petrol	120	06/15->	MR16DDT

Engine	Information	A10	A20	A40	A50	A70	C10 - C30		C20	E01
All engines	x 4, COIL ON PLUG						9.6451	C10		

				ENGINE
2.0	Petrol	106	09/14->	MR20DD

Engine	Information	A10	A20	A40	A50	A70	C10 - C30		C20	E01
All engines	x 4, COIL ON PLUG						9.6451	C10		

				ENGINE
2.0 ALL MODE 4x4-i	Petrol	106	09/14->	MR20DD

Engine	Information	A10	A20	A40	A50	A70	C10 - C30		C20	E01
All engines	x 4, COIL ON PLUG						9.6451	C10		

				ENGINE
2.5	Petrol	126	12/13->	QR25DE

Engine	Information	A10	A20	A40	A50	A70	C10 - C30		C20	E01
All engines	Qty: 4						9.6452	C10		

				ENGINE
2.5 ALL MODE 4x4-i	Petrol	126	12/13->	QR25DE

Engine	Information	A10	A20	A40	A50	A70	C10 - C30		C20	E01
All engines	x 4, COIL ON PLUG						9.6452	C10		

A10	CONDENSER	A20	CONTACT SET	A40	DISTRIBUTOR CAP	A50	ROTOR	A70	PICK-UP
C10	COIL	C20	IGNITION MODULE	C30	ELECTRONIC IGNITION KIT	E01	IGNITION CABLE SET		

The present application list is a brief version. For the detailed information about the possibility of installation on a specific vehicle, please refer to our web-catalogue http://catalogo.facet.eu/

Vehicle	alim.	kW	Date	Engine	FUNCTIONS ON THE VEHICLE							
					A10	A20	A40	A50	A70	C10 - C30	C20	E01

1000

				ENGINE
C	Petrol	29	08/63-12/72	--

Engine	Information	A10	A20	A40	A50	A70	C10 - C30	C20	E01
All engines					3.7521RS				

A10	CONDENSER	**A20**	CONTACT SET	**A40**	DISTRIBUTOR CAP	**A50**	ROTOR	**A70**	PICK-UP
C10	COIL	**C20**	IGNITION MODULE	**C30**	ELECTRONIC IGNITION KIT	**E01**	IGNITION CABLE SET		

Vehicle	alim.	kW	Date	Engine	FUNCTIONS ON THE VEHICLE A10	A20	A40	A50	A70	C10 - C30	C20	E01

ADAM

				ENGINE
1.0	Petrol	66	07/14-11/18	B 10 XFL, D 10 XFL

Engine	Information	A10	A20	A40	A50	A70	C10 - C30		C20	E01
All engines	x 3, COIL ON PLUG						9.6531	C10		

				ENGINE
1.0	Petrol	85	07/14-11/18	B 10 XFT, D 10 XFT

Engine	Information	A10	A20	A40	A50	A70	C10 - C30		C20	E01
All engines	x 3, COIL ON PLUG						9.6531	C10		

				ENGINE
1.2	Petrol	51	10/12-02/19	A 12 XEL, B 12 XEL, D 12 XEL

Engine	Information	A10	A20	A40	A50	A70	C10 - C30		C20	E01
All engines	x 1, COIL ON RAIL						9.6447	C10		

				ENGINE
1.4	Petrol	64	10/12-02/19	A 14 XEL, B 14 XEL, D 14 XEL

Engine	Information	A10	A20	A40	A50	A70	C10 - C30		C20	E01
All engines	x 1, COIL ON RAIL						9.6447	C10		

				ENGINE
1.4	Petrol	74	10/12-02/19	A 14 XER, B 14 XER, D 14 XER

Engine	Information	A10	A20	A40	A50	A70	C10 - C30		C20	E01
All engines	x 1, COIL ON RAIL						9.6447	C10		

				ENGINE
1.4 LPG	Petrol/ Liquified Petro-leum Gas (LPG)	64	07/13-11/18	A 14 XEL, B 14 XEL, D 14 XEL

Engine	Information	A10	A20	A40	A50	A70	C10 - C30		C20	E01
All engines	x 1, COIL ON RAIL						9.6447	C10		

				ENGINE
1.4 S	Petrol	110	11/14-01/19	B 14 NEH, D 14 NEH

Engine	Information	A10	A20	A40	A50	A70	C10 - C30		C20	E01
All engines	x 1, COIL ON RAIL						9.6447	C10		

ADMIRAL

				ENGINE
2.6 S	Petrol	74	04/64-09/65	26 S

Engine	Information	A10	A20	A40	A50	A70	C10 - C30		C20	E01
All engines			1.2529HDV							

AGILA A

				ENGINE
1.0	Petrol	44	08/03-12/07	Z 10 XEP

Engine	Information	A10	A20	A40	A50	A70	C10 - C30		C20	E01
All engines	x 3, BOSCH, COIL ON PLUG, 12 Volt, Dia: 55 mm, for pre-resistance						9.6298	C10		

				ENGINE
1.0 12V	Petrol	43	09/00-12/07	Z10XE

Engine	Information	A10	A20	A40	A50	A70	C10 - C30		C20	E01
All engines	x 3, BOSCH, COIL ON PLUG						9.6298	C10		

				ENGINE
1.2 16V	Petrol	55	09/00-12/07	Z 12 XE

Engine	Information	A10	A20	A40	A50	A70	C10 - C30		C20	E01
All engines	x 4, BOSCH, COIL ON PLUG						9.6300	C10		

				ENGINE
1.2 16V Twinport	Petrol	59	07/04-12/07	Z 12 XEP

Engine	Information	A10	A20	A40	A50	A70	C10 - C30		C20	E01
All engines	x 1, BOSCH, COIL ON PLUG, incl. spark plug connector						9.6300	C10		

AMPERA

				ENGINE
EV 150	Petrol/ Electric	111	11/11-03/15	A 14 XFL

Engine	Information	A10	A20	A40	A50	A70	C10 - C30		C20	E01
All engines	x 1, COIL ON RAIL						9.6447	C10		

A10	CONDENSER	A20	CONTACT SET	A40	DISTRIBUTOR CAP	A50	ROTOR	A70	PICK-UP
C10	COIL	C20	IGNITION MODULE	C30	ELECTRONIC IGNITION KIT	E01	IGNITION CABLE SET		

The present application list is a brief version. For the detailed information about the possibility of installation on a specific vehicle, please refer to our web-catalogue http://catalogo.facet.eu/

Vehicle	alim.	kW	Date	Engine	FUNCTIONS ON THE VEHICLE A10	A20	A40	A50	A70	C10 - C30	C20	E01

ASCONA B

				ENGINE
2.0 N	Petrol	66	08/77-08/81	20 N

Engine	Information	A10	A20	A40	A50	A70	C10 - C30		C20	E01
All engines					3.7593RS					

ASCONA C

				ENGINE
1.3 N	Petrol	44	09/81-08/86	13 N

Engine	Information	A10	A20	A40	A50	A70	C10 - C30		C20	E01
All engines	version Bosch		1.2534HDVS	2.7480PHT	3.7526RS					
All engines	version Delco Remy			2.7573PHT	3.7596	8.3411				
All engines	eng. type 879422 ->						9.6011	C10		
All engines										4.8514

				ENGINE
1.3 S	Petrol	55	09/81-08/88	13 S

Engine	Information	A10	A20	A40	A50	A70	C10 - C30		C20	E01
All engines	eng. type 885919 ->						9.6011	C10		
All engines										4.8514

				ENGINE
1.6	Petrol	55	09/81-08/88	16 N

Engine	Information	A10	A20	A40	A50	A70	C10 - C30		C20	E01
All engines	version Bosch			2.7480PHT	3.7556RS					
All engines							9.6009	C10		

				ENGINE
1.6	Petrol	60	09/86-08/88	16 SV

Engine	Information	A10	A20	A40	A50	A70	C10 - C30		C20	E01
All engines	prod. nr. 4J24 ->, version Delco Remy			2.7573PHT						
All engines	->prod. nr. 4J23, version Delco Remy			2.7574PHT						
All engines	version Delco Remy				3.7597	8.3411				
All engines							9.6011	C10		4.8514

				ENGINE
1.6 i	Petrol	55	09/87-08/88	E 16 NZ

Engine	Information	A10	A20	A40	A50	A70	C10 - C30		C20	E01
All engines										4.9942

				ENGINE
1.6 i Cat	Petrol	55	09/86-08/88	C 16 LZ, C 16 NZ

Engine	Information	A10	A20	A40	A50	A70	C10 - C30		C20	E01
All engines	version Delco Remy			2.7573PHT	3.7597	8.3410				
All engines							9.6011	C10	9.4025	4.9942

				ENGINE
1.6 S	Petrol	66	09/81-08/86	16 SH

Engine	Information	A10	A20	A40	A50	A70	C10 - C30		C20	E01
All engines	version Bosch			2.7480PHT	3.7556RS					
All engines							9.6009	C10		

				ENGINE
1.8	Petrol	62	09/87-08/88	E 18 NV

Engine	Information	A10	A20	A40	A50	A70	C10 - C30		C20	E01
All engines	version Bosch			2.7530/10PHT	3.7573/27RS					
All engines							9.6094	C10		

				ENGINE
1.8	Petrol	85	09/81-08/88	18 SE

Engine	Information	A10	A20	A40	A50	A70	C10 - C30		C20	E01
All engines	version Bosch			2.7530/10PHT	3.7573/27RS					

				ENGINE
1.8 E	Petrol	74	01/85-08/86	C 18 NE, S 18 NV

Engine	Information	A10	A20	A40	A50	A70	C10 - C30		C20	E01
Eng. C 18 NE	version Bosch			2.7480PHT	3.7556RS					
Eng. S 18 NV	version Bosch			2.7530/10PHT	3.7573/27RS					
Eng. S 18 NV							9.6094	C10		

A10	CONDENSER	A20	CONTACT SET	A40	DISTRIBUTOR CAP	A50	ROTOR	A70	PICK-UP
C10	COIL	C20	IGNITION MODULE	C30	ELECTRONIC IGNITION KIT	E01	IGNITION CABLE SET		

The present application list is a brief version. For the detailed information about the possibility of installation on a specific vehicle, please refer to our web-catalogue http://catalogo.facet.eu/

Vehicle	alim.	kW	Date	Engine	FUNCTIONS ON THE VEHICLE A10	A20	A40	A50	A70	C10 - C30	C20	E01
1.8 i	Petrol	85	09/82-08/86	ENGINE 18 E								
Engine	Information	A10	A20	A40	A50	A70	C10 - C30		C20	E01		
All engines	version Bosch			2.7480PHT	3.7556RS							
All engines							9.6009	C10				
2.0 i	Petrol	85	09/86-08/88	ENGINE 20 NE								
Engine	Information	A10	A20	A40	A50	A70	C10 - C30		C20	E01		
All engines	version Bosch			2.7530/10PHT	3.7573/27RS							
All engines							9.6094	C10				
2.0 i Cat	Petrol	85	09/86-08/88	ENGINE C 20 NE								
Engine	Information	A10	A20	A40	A50	A70	C10 - C30		C20	E01		
All engines	version Bosch			2.7530/10PHT	3.7573/27RS							
All engines							9.6094	C10				
2.0 i GT	Petrol	95	03/87-08/88	ENGINE 20 SEH								
Engine	Information	A10	A20	A40	A50	A70	C10 - C30		C20	E01		
All engines	version Bosch			2.7530/10PHT	3.7573/27RS							
All engines							9.6094	C10				

ASTRA F

1.4	Petrol	55	09/91-09/93	ENGINE 14 NV								
Engine	Information	A10	A20	A40	A50	A70	C10 - C30		C20	E01		
All engines	version Bosch			2.7530/26PHT	3.7556RS							
All engines									9.4005			
All engines	->eng. 02BF1476, 19241623									4.9237		
All engines	eng. type 02BF1477, 19241624 ->									4.9529		
1.4	Petrol	60	09/92-09/98	ENGINE 14 SE								
Engine	Information	A10	A20	A40	A50	A70	C10 - C30		C20	E01		
All engines	version Lucas			2.8100PHT	3.8128RS							
All engines							9.6040	C10	9.4036			
All engines	eng. type 02T14053, 02BD1413 ->									4.8634		
All engines	->eng. 02T14052, 19880550									4.9237		
All engines	eng. type 02BD1413, 19280317 ->									4.9531		
1.4 i	Petrol	44	09/91-01/05	ENGINE C 14 NZ, X 14 NZ								
Engine	Information	A10	A20	A40	A50	A70	C10 - C30		C20	E01		
All engines	connector type SAE, version Bosch			2.7530/19PHT								
All engines	connector type M4, version Bosch			2.7530/26PHT								
All engines	version Bosch				3.7573/21RS							
All engines	version Lucas				3.8128RS	8.4702						
All engines							9.6040	C10	9.4036			
All engines	->eng. 02BF1476, 19241623									4.9237		
All engines	eng. type 02BF1477, 19241624 ->									4.9529		
1.4 i 16V	Petrol	66	01/96-03/01	ENGINE X 14 XE								
Engine	Information	A10	A20	A40	A50	A70	C10 - C30		C20	E01		
All engines										4.9559		
1.4 Si	Petrol	60	03/92-03/01	ENGINE C 14 SE								
Engine	Information	A10	A20	A40	A50	A70	C10 - C30		C20	E01		
All engines	version Lucas			2.8100PHT	3.8128RS							
All engines							9.6040	C10	9.4036			
All engines	eng. type 02T14053, 02BD1413 ->									4.8634		
All engines	->eng. 02T14052, 19880550									4.9237		
All engines	eng. type 02BD1413, 19280317 ->									4.9531		
1.6	Petrol	55	09/95-09/98	ENGINE 16 LZ2, 16 NZR								
Engine	Information	A10	A20	A40	A50	A70	C10 - C30		C20	E01		
Eng. 16 LZ2	version Ducellier			2.7684PHT	3.7703RS							

A10	CONDENSER	A20	CONTACT SET	A40	DISTRIBUTOR CAP	A50	ROTOR	A70	PICK-UP
C10	COIL	C20	IGNITION MODULE	C30	ELECTRONIC IGNITION KIT	E01	IGNITION CABLE SET		

The present application list is a brief version. For the detailed information about the possibility of installation on a specific vehicle, please refer to our web-catalogue http://catalogo.facet.eu/

Vehicle	alim.	kW	Date	Engine	FUNCTIONS ON THE VEHICLE A10	A20	A40	A50	A70	C10 - C30	C20	E01
1.6	Petrol	55	09/95-09/98	ENGINE 16 LZ2, 16 NZR								
Eng. 16 LZ2										9.6040 C10	9.4036	
Eng. 16 LZ2	FOR: (ZA)									9.6092 C10		
Eng. 16 NZR	->eng. 02BE6166											4.8634
Eng. 16 NZR	eng. type 02BE6167 ->											4.9531
1.6 i	Petrol	52	02/93-08/96	ENGINE X 16 SZ								
All engines	->eng. 02BE6166											4.8634
All engines	eng. type 02BE6167 ->											4.9531
1.6 i	Petrol	55	09/91-01/05	ENGINE C 16 NZ, X 16 SZR								
Eng. C 16 NZ	version Delco Remy						2.7573PHT	3.7600	8.3410			
Eng. C 16 NZ										9.6241 C10	9.4025	
Eng. C 16 NZ	->eng. 02V65825											4.8514
Eng. X 16 SZR	->eng. 02BE6166											4.8634
Eng. X 16 SZR	eng. type 02BE6167 ->											4.9531
1.6 i 16V	Petrol	74	08/94-01/05	ENGINE X 16 XEL								
All engines	->eng. 20C17332											4.8688
All engines	eng. type 20C17333 ->											4.9559
1.6 Si	Petrol	74	03/92-12/94	ENGINE C 16 SE								
All engines	->eng. 02BD0920											4.8634
All engines	eng. type 02BD0921 ->											4.9531
1.8	Petrol	81	02/03-07/04	ENGINE Z 18 XEL								
All engines										9.6172 C10		4.9562
1.8 i	Petrol	66	09/91-09/98	ENGINE C 18 NZ								
All engines	version Bosch						2.7530/27PHT	3.7573/27RS				
All engines	version Ducellier						2.7684PHT	3.7703RS				
All engines										9.6040 C10	9.4036	
All engines	FOR: (ZA)									9.6092 C10		
All engines	eng. type 14349312 ->											4.8689
1.8 i	Petrol	85	03/98-08/00	ENGINE X 18 XE1								
All engines										9.6408 C10		
1.8 i 16V	Petrol	82	09/95-09/96	ENGINE 18 SE								
All engines										9.6092 C10		
1.8 i 16V	Petrol	85	07/94-03/01	ENGINE C 18 SEL, C 18 XEL, X 18 XE								
All engines										9.6172 C10		
All engines	ch. W2000000 ->, ch. W5000000 ->, ch. W8000000 ->											4.9506
All engines	->ch. V2999999, ->ch. V5999999, ->ch. V8999999											4.9562
1.8 i 16V	Petrol	92	06/93-01/98	ENGINE C 18 XE								
All engines										9.6172 C10		
All engines	ch. W2000000 ->, ch. W5000000 ->, ch. W8000000 ->											4.9506

A10	CONDENSER	A20	CONTACT SET	A40	DISTRIBUTOR CAP	A50	ROTOR	A70	PICK-UP
C10	COIL	C20	IGNITION MODULE	C30	ELECTRONIC IGNITION KIT	E01	IGNITION CABLE SET		

The present application list is a brief version. For the detailed information about the possibility of installation on a specific vehicle, please refer to our web-catalogue http://catalogo.facet.eu/

Vehicle	alim.	kW	Date	Engine	FUNCTIONS ON THE VEHICLE							
					A10	A20	A40	A50	A70	C10 - C30	C20	E01
1.8 i 16V	Petrol	92	06/93-01/98	ENGINE C 18 XE								
Engine: All engines — Information: ->ch. V2999999, ->ch. V5999999, ->ch. V8999999												4.9562
2.0 GSI 16V	Petrol	110	09/91-01/98	ENGINE C 20 XE								
All engines — ->eng. 14137012, version Bosch							2.7530/27PHT	3.7573/21RS				
All engines — eng. type 14137013 ->										9.6173 C10		
All engines — eng. type 14002935 ->												4.8688
2.0 i	Petrol	85	09/91-09/98	ENGINE C 20 NE								
All engines — version Bosch							2.7530/27PHT	3.7573/27RS				
All engines — version Ducellier							2.7684PHT	3.7703RS				
All engines										9.6092 C10		
All engines — eng. type 14672354 ->, ->ch. R2999999, ->ch. R3999999, ->ch. R4999999, ->ch. R5999999, ->ch. R6999999, ->ch. R8999999												4.8689
2.0 i 16V	Petrol	100	02/95-08/00	ENGINE X 20 XEV								
All engines										9.6172 C10		
All engines — ch. W2000000 ->, ch. W5000000 ->, ch. W8000000 ->												4.9506
All engines — ->ch. V2999999, ->ch. V5999999, ->ch. V8999999												4.9562
2.0 i 16V	Petrol	110	03/93-01/98	ENGINE C 20 XE								
All engines — ->eng. 14137012, version Bosch							2.7530/27PHT	3.7573/21RS				
All engines — eng. type 14137013 ->										9.6173 C10		
All engines — eng. type 14002935 ->												4.8688
2.0 i 16V	Petrol	118	10/99-08/00	ENGINE X 20 XER								
All engines										9.6172 C10		4.9562
ASTRA G												
1.2	Petrol	48	09/98-08/00	ENGINE X 12 XE								
All engines — x 4, BOSCH, COIL ON PLUG										9.6300 C10		
1.2 16V	Petrol	48	02/98-09/00	ENGINE X 12 XE								
All engines — x 4, BOSCH, COIL ON PLUG										9.6300 C10		
1.2 16V	Petrol	55	09/00-01/05	ENGINE Z 12 XE								
All engines — ->ch. 38999999, ch. 39000000 ->, x 1, x 4, BOSCH, COIL ON PLUG, incl. spark plug connector										9.6300 C10		
1.4	Petrol	66	09/98-12/09	ENGINE X 14 XE, Z 14 XE, Z 14 XEP								
Eng. X 14 XE, Z 14 XE — x 4, COIL ON PLUG, incl. spark plug connector										9.6299 C10		
Eng. Z 14 XEP — x 1, BOSCH, COIL ON PLUG, incl. spark plug connector										9.6300 C10		
1.4 16V	Petrol	66	02/98-01/05	ENGINE X 14 XE, Z 14 XE								
All engines — x 4, COIL ON PLUG, incl. spark plug connector										9.6299 C10		

A10	CONDENSER	A20	CONTACT SET	A40	DISTRIBUTOR CAP	A50	ROTOR	A70	PICK-UP
C10	COIL	C20	IGNITION MODULE	C30	ELECTRONIC IGNITION KIT	E01	IGNITION CABLE SET		

The present application list is a brief version. For the detailed information about the possibility of installation on a specific vehicle, please refer to our web-catalogue http://catalogo.facet.eu/

Vehicle	alim.	kW	Date	Engine	FUNCTIONS ON THE VEHICLE A10	A20	A40	A50	A70	C10 - C30	C20	E01
1.4 LPG	Petrol/ Liquified Petro-leum Gas (LPG)	66	02/98-01/05	ENGINE X 14 XE, Z 14 XE								
Engine: All engines	Information: x 4, COIL ON PLUG, incl. spark plug connector									9.6299 C10		
1.6	Petrol	55	02/98-09/00	ENGINE X 16 SZR								
Engine: All engines	Information:											4.9904
1.6	Petrol	62	09/00-04/05	ENGINE Z 16 SE								
Engine: All engines	Information:											4.9904
1.6	Petrol	74	09/98-01/04	ENGINE C 16 SEL, Z 16 XE								
Engine: All engines	Information: x 4, COIL ON PLUG, incl. spark plug connector									9.6299 C10		
1.6	Petrol	76	11/02-12/09	ENGINE Z 16 XEP								
Engine: All engines	Information: x 4, COIL ON PLUG, incl. spark plug connector									9.6299 C10		
Engine: All engines	Information: x 1, DELPHI, COIL ON PLUG, incl. spark plug connector									9.6350 C10		
1.6 16V	Petrol	74	02/98-10/05	ENGINE X 16 XEL, Z 16 XE								
Engine: All engines	Information: x 4, COIL ON PLUG, incl. spark plug connector									9.6299 C10		
1.6 16V	Petrol	76	03/00-05/05	ENGINE Z 16 XEP								
Engine: All engines	Information: x 1, DELPHI, COIL ON PLUG, incl. spark plug connector									9.6350 C10		
1.6 CNG	Petrol/ Com-pressed Natural Gas (CNG)	71	03/03-07/04	ENGINE Z 16 YNG								
Engine: All engines	Information: x 4, COIL ON PLUG, incl. spark plug connector									9.6299 C10		
1.6 LPG	Petrol/ Liquified Petro-leum Gas (LPG)	74	03/98-01/05	ENGINE X 16 XEL, Z 16 XE								
Engine: All engines	Information: x 4, COIL ON PLUG, incl. spark plug connector									9.6299 C10		
1.6 LPG	Petrol/ Liquified Petro-leum Gas (LPG)	76	06/02-06/07	ENGINE Z 16 XEP								
Engine: All engines	Information: x 1, DELPHI, COIL ON PLUG, incl. spark plug connector									9.6350 C10		
1.8	Petrol	81	02/03-07/04	ENGINE Z 18 XEL								
Engine: All engines	Information:									9.6408 C10		
1.8 16V	Petrol	85	02/98-10/00	ENGINE X 18 XE1								
Engine: All engines	Information: x 1, COIL ON PLUG, incl. spark plug connector									9.6408 C10		

A10	CONDENSER	A20	CONTACT SET	A40	DISTRIBUTOR CAP	A50	ROTOR	A70	PICK-UP
C10	COIL	C20	IGNITION MODULE	C30	ELECTRONIC IGNITION KIT	E01	IGNITION CABLE SET		

The present application list is a brief version. For the detailed information about the possibility of installation on a specific vehicle, please refer to our web-catalogue http://catalogo.facet.eu/

Vehicle	alim.	kW	Date	Engine	FUNCTIONS ON THE VEHICLE							
					A10	A20	A40	A50	A70	C10 - C30	C20	E01
1.8 16V	Petrol	92	06/00-10/05	ENGINE Z 18 XE								
Engine: All engines	Information: x 1, COIL ON PLUG, incl. spark plug connector									9.6408 C10		
2.0 16V	Petrol	100	02/98-01/05	ENGINE X 20 XEV								
Engine: All engines	Information: x 1, D.I.S.									9.6172 C10		
Engine: All engines	Information:											4.9562
2.0 16V OPC	Petrol	118	11/99-09/02	ENGINE X 20 XER								
Engine: All engines	Information: x 1, D.I.S.									9.6172 C10		
Engine: All engines	Information:											4.9562
2.0 16V Turbo	Petrol	140	09/00-08/01	ENGINE Z 20 LET								
Engine: All engines	Information: x 1, COIL ON PLUG									9.6407 C10		
2.0 16V Turbo	Petrol	141	08/01-05/05	ENGINE Z 20 LET								
Engine: All engines	Information: x 1, COIL ON PLUG									9.6407 C10		
2.0 16V Turbo	Petrol	147	11/02-10/05	ENGINE Z 20 LET								
Engine: All engines	Information: x 1, COIL ON PLUG									9.6407 C10		
2.0 OPC	Petrol	141	03/02-10/05	ENGINE Z 20 LET								
Engine: All engines	Information: x 1, COIL ON PLUG									9.6407 C10		
2.0 OPC	Petrol	147	11/02-01/05	ENGINE Z 20 LET								
Engine: All engines	Information: x 1, COIL ON PLUG									9.6407 C10		
ASTRA H												
1.2	Petrol	59	08/05-10/10	ENGINE Z 12 XEP								
Engine: All engines	Information:									9.6300 C10		
Engine: All engines	Information: x 1, BOSCH, COIL ON PLUG, incl. spark plug connector									9.6300 C10		
1.4	Petrol	55	04/04-10/10	ENGINE Z 14 XEL								
Engine: All engines	Information: x 1, BOSCH, COIL ON PLUG, incl. spark plug connector									9.6300 C10		
1.4	Petrol	59	04/04-10/04	ENGINE Z 14 XEL								
Engine: All engines	Information:									9.6300 C10		
1.4	Petrol	66	03/04-10/10	ENGINE Z 14 XEP								
Engine: All engines	Information: x 1, BOSCH, COIL ON PLUG, incl. spark plug connector									9.6300 C10		
1.4 16V	Petrol	66	05/04-07/09	ENGINE Z 14 XE								
Engine: All engines	Information: x 4, COIL ON PLUG, incl. spark plug connector									9.6299 C10		
1.4 EcoTec	Petrol	66	12/04-12/12	ENGINE Z 14 XEP								
Engine: All engines	Information: x 1, BOSCH, COIL ON PLUG, incl. spark plug connector									9.6300 C10		

A10	CONDENSER	A20	CONTACT SET	A40	DISTRIBUTOR CAP	A50	ROTOR	A70	PICK-UP
C10	COIL	C20	IGNITION MODULE	C30	ELECTRONIC IGNITION KIT	E01	IGNITION CABLE SET		

The present application list is a brief version. For the detailed information about the possibility of installation on a specific vehicle, please refer to our web-catalogue http://catalogo.facet.eu/

Vehicle	alim.	kW	Date	Engine	FUNCTIONS ON THE VEHICLE A10	A20	A40	A50	A70	C10 - C30	C20	E01
1.4 LPG	Petrol/ Liquified Petro-leum Gas (LPG)	66	08/09-10/10	ENGINE Z 14 XEP								
Engine: All engines	Information: x 1, BOSCH, COIL ON PLUG, incl. spark plug connector									9.6300 C10		
1.6	Petrol	74	06/04-02/06	ENGINE Z 16 XE								
Engine: All engines	Information: x 4, COIL ON PLUG, incl. spark plug connector									9.6299 C10		
1.6	Petrol	76	02/06-07/09	ENGINE Z 16 XEP								
Engine: All engines	Information: x 1, DELPHI, COIL ON PLUG, incl. spark plug connector									9.6350 C10		
1.6	Petrol	77	03/04-10/10	ENGINE Z 16 XE1, Z 16 XEP								
Engine: All engines	Information: x 1, DELPHI, COIL ON PLUG, incl. spark plug connector									9.6350 C10		
1.6	Petrol	85	12/06-05/14	ENGINE A 16 XER, Z 16 XER								
Engine: All engines	Information: x 1, DELPHI, COIL ON PLUG, incl. spark plug connector									9.6350 C10		
1.6 16V	Petrol	74	03/04-01/08	ENGINE Z 16 XE								
Engine: All engines	Information: x 4, COIL ON PLUG, incl. spark plug connector									9.6299 C10		
1.6 EcoTec	Petrol	76	02/04-11/04	ENGINE Z 16 XEP								
Engine: All engines	Information: x 1, DELPHI, COIL ON PLUG, incl. spark plug connector									9.6350 C10		
1.6 EcoTec	Petrol	85	10/06-12/10	ENGINE Z 16 XER								
Engine: All engines	Information: x 1, DELPHI, COIL ON PLUG, incl. spark plug connector									9.6350 C10		
1.6 LPG	Petrol/ Liquified Petro-leum Gas (LPG)	85	08/09-10/10	ENGINE Z 16 XER								
Engine: All engines	Information: x 1, DELPHI, COIL ON PLUG, incl. spark plug connector									9.6350 C10		
1.6 Turbo	Petrol	132	02/07-10/10	ENGINE A 16 LET, Z 16 LET								
Engine: All engines	Information: x 1, DELPHI, COIL ON PLUG, incl. spark plug connector									9.6350 C10		
1.8	Petrol	103	08/05-05/14	ENGINE A 18 XER, Z 18 XER								
Engine: All engines	Information: x 1, DELPHI, COIL ON PLUG, incl. spark plug connector									9.6350 C10		
1.8	Petrol	92	01/04-10/10	ENGINE Z 18 XE								
Engine: All engines	Information: x 1, COIL ON PLUG, incl. spark plug connector									9.6408 C10		
2.0 Turbo	Petrol	125	03/04-10/10	ENGINE Z 20 LEL								
Engine: All engines	Information: x 1, COIL ON PLUG									9.6407 C10		
2.0 Turbo	Petrol	147	09/04-10/10	ENGINE Z 20 LER								
Engine: All engines	Information: x 1, COIL ON PLUG									9.6407 C10		

A10	CONDENSER	A20	CONTACT SET	A40	DISTRIBUTOR CAP	A50	ROTOR	A70	PICK-UP
C10	COIL	C20	IGNITION MODULE	C30	ELECTRONIC IGNITION KIT	E01	IGNITION CABLE SET		

The present application list is a brief version. For the detailed information about the possibility of installation on a specific vehicle, please refer to our web-catalogue http://catalogo.facet.eu/

Vehicle	alim.	kW	Date	Engine	FUNCTIONS ON THE VEHICLE							
					A10	A20	A40	A50	A70	C10 - C30	C20	E01
2.0 Turbo	Petrol	177	03/05-10/10	**Z 20 LEH**								

Engine	Information	A10	A20	A40	A50	A70	C10 - C30	C20	E01
All engines	x 1, COIL ON PLUG						9.6407 C10		

ASTRA J

1.4	Petrol	103	10/11->	**A 14 NET, B 14 NET**

Engine	Information	A10	A20	A40	A50	A70	C10 - C30	C20	E01
All engines	x 1, COIL ON RAIL						9.6447 C10		

1.4	Petrol	64	12/09-10/15	**A 14 XEL**

Engine	Information	A10	A20	A40	A50	A70	C10 - C30	C20	E01
All engines	x 1, COIL ON RAIL						9.6447 C10		

1.4	Petrol	66	01/09->	**Z 14 XEP**

Engine	Information	A10	A20	A40	A50	A70	C10 - C30	C20	E01
All engines	x 1, BOSCH, COIL ON PLUG, incl. spark plug connector						9.6300 C10		

1.4	Petrol	74	12/09-10/15	**A 14 XER, B 14 XER**

Engine	Information	A10	A20	A40	A50	A70	C10 - C30	C20	E01
All engines	x 1, COIL ON RAIL						9.6447 C10		

1.4	Petrol	88	10/11->	**A 14 NEL, B 14 NEL**

Engine	Information	A10	A20	A40	A50	A70	C10 - C30	C20	E01
All engines	x 1, COIL ON RAIL						9.6447 C10		

1.4 LPG	Petrol/ Liquified Petro-leum Gas (LPG)	103	12/11->	**A 14 NET**

Engine	Information	A10	A20	A40	A50	A70	C10 - C30	C20	E01
All engines	x 1, COIL ON RAIL						9.6447 C10		

1.4 Turbo	Petrol	103	12/09->	**A 14 NET, B 14 NET**

Engine	Information	A10	A20	A40	A50	A70	C10 - C30	C20	E01
All engines	x 1, COIL ON RAIL						9.6447 C10		

1.4 Turbo	Petrol	88	10/10-10/15	**A 14 NEL, B 14 NEL**

Engine	Information	A10	A20	A40	A50	A70	C10 - C30	C20	E01
All engines	x 1, COIL ON RAIL						9.6447 C10		

1.6	Petrol	132	10/11->	**A 16 LET**

Engine	Information	A10	A20	A40	A50	A70	C10 - C30	C20	E01
All engines	x 1, COIL ON PLUG						9.6445 C10		

1.6	Petrol	85	12/06->	**A 16 XER, B 16 XER, Z 16 XER**

Engine	Information	A10	A20	A40	A50	A70	C10 - C30	C20	E01
Eng. Z 16 XER	x 1, DELPHI, COIL ON PLUG, incl. spark plug connector						9.6350 C10		
Eng. A 16 XER, B 16 XER	x 1, COIL ON PLUG, COIL RAILS						9.6445 C10		

1.6 LPG	Petrol/ Liquified Petro-leum Gas (LPG)	84	10/12-10/15	**A 16 XER**

Engine	Information	A10	A20	A40	A50	A70	C10 - C30	C20	E01
All engines							9.6445 C10		

1.6 Turbo	Petrol	132	12/09->	**A 16 LET**

Engine	Information	A10	A20	A40	A50	A70	C10 - C30	C20	E01
All engines	x 1, COIL ON PLUG						9.6445 C10		

A10	CONDENSER	**A20**	CONTACT SET	**A40**	DISTRIBUTOR CAP	**A50**	ROTOR	**A70**	PICK-UP
C10	COIL	**C20**	IGNITION MODULE	**C30**	ELECTRONIC IGNITION KIT	**E01**	IGNITION CABLE SET		

The present application list is a brief version. For the detailed information about the possibility of installation on a specific vehicle, please refer to our web-catalogue http://catalogo.facet.eu/

Vehicle	alim.	kW	Date	Engine	FUNCTIONS ON THE VEHICLE A10	A20	A40	A50	A70	C10 - C30	C20	E01
1.8	Petrol	103	02/07->	ENGINE A 18 XER, Z 18 XER								

Engine	Information	A10	A20	A40	A50	A70	C10 - C30		C20	E01
Eng. Z 18 XER	x 1, DELPHI, COIL ON PLUG, incl. spark plug connector						9.6350	C10		
Eng. A 18 XER	x 1, COIL ON PLUG						9.6445	C10		

ASTRA K

1.0	Petrol	77	05/18->	ENGINE D 10 XFL

Engine	Information	A10	A20	A40	A50	A70	C10 - C30		C20	E01
All engines	x 3, COIL ON PLUG						9.6531	C10		

1.0 Turbo	Petrol	66	06/18->	ENGINE D 10 XFL

Engine	Information	A10	A20	A40	A50	A70	C10 - C30		C20	E01
All engines	x 3, COIL ON PLUG						9.6531	C10		

1.0 Turbo	Petrol	77	06/15->	ENGINE B 10 XFL, D 10 XFL

Engine	Information	A10	A20	A40	A50	A70	C10 - C30		C20	E01
All engines	x 3, COIL ON PLUG						9.6531	C10		

1.4	Petrol	110	06/18->	ENGINE D 14 XFT

Engine	Information	A10	A20	A40	A50	A70	C10 - C30		C20	E01
All engines	x 4, COIL ON PLUG						9.6531	C10		

1.4 CNG	Petrol/ Compressed Natural Gas (CNG)	81	10/17->	ENGINE B 14 XNT

Engine	Information	A10	A20	A40	A50	A70	C10 - C30		C20	E01
All engines	x 4, COIL ON PLUG						9.6531	C10		

1.4 Turbo	Petrol	110	06/15->	ENGINE B 14 XFT, D 14 XFT

Engine	Information	A10	A20	A40	A50	A70	C10 - C30		C20	E01
All engines	x 4, COIL ON PLUG						9.6531	C10		

1.4 Turbo	Petrol	92	06/15->	ENGINE B 14 XFL, D14XFL

Engine	Information	A10	A20	A40	A50	A70	C10 - C30		C20	E01
All engines	x 4, COIL ON PLUG						9.6531	C10		

CALIBRA A

2.0 i	Petrol	85	08/89-12/96	ENGINE C 20 NE

Engine	Information	A10	A20	A40	A50	A70	C10 - C30		C20	E01
All engines	version Bosch			2.7530/27PHT	3.7573/27RS					
All engines	version Ducellier			2.7684PHT	3.7703RS					
All engines	->eng. 14180385, info WY						9.6091	C10		
All engines	eng. type 14180386 ->, info WE						9.6092	C10		
All engines	eng. type 14672353 ->, ->ch. R1..., R9..., no specific info conc. application available									4.8689

2.0 i 16V	Petrol	100	02/94-07/97	ENGINE X 20 XEV

Engine	Information	A10	A20	A40	A50	A70	C10 - C30		C20	E01
All engines							9.6172	C10		
All engines	ch. 14195307 ->									4.9506
All engines	->ch. 14195306									4.9562

2.0 i 16V	Petrol	110	06/90-02/94	ENGINE C 20 XE

Engine	Information	A10	A20	A40	A50	A70	C10 - C30		C20	E01
All engines	version Bosch			2.7530/21PHT	3.7573/21RS					
All engines	ch. P1000001, P9000001 ->						9.6173	C10		4.8688

2.0 i 16V 4x4	Petrol	100	02/94-07/97	ENGINE X 20 XEV

Engine	Information	A10	A20	A40	A50	A70	C10 - C30		C20	E01
All engines							9.6172	C10		

A10	CONDENSER	A20	CONTACT SET	A40	DISTRIBUTOR CAP	A50	ROTOR	A70	PICK-UP
C10	COIL	C20	IGNITION MODULE	C30	ELECTRONIC IGNITION KIT	E01	IGNITION CABLE SET		

The present application list is a brief version. For the detailed information about the possibility of installation on a specific vehicle, please refer to our web-catalogue http://catalogo.facet.eu/

Vehicle	alim.	kW	Date	Engine	FUNCTIONS ON THE VEHICLE: A10	A20	A40	A50	A70	C10 - C30	C20	E01
2.0 i 16V 4x4	Petrol	100	02/94-07/97	ENGINE: X 20 XEV								
Engine: All engines	Information: ch. 14195307 ->											4.9506
Engine: All engines	Information: ->ch. 14195306											4.9562
2.0 i 16V 4x4	Petrol	110	06/90-02/94	ENGINE: C 20 XE								
Engine: All engines	Information: version Bosch						2.7530/21PHT	3.7573/21RS				
Engine: All engines	Information: ch. P1000001, P9000001 ->									9.6173 C10		4.8688
2.0 i 4x4	Petrol	85	06/90-07/97	ENGINE: C 20 NE								
Engine: All engines	Information: version Bosch						2.7530/27PHT	3.7573/27RS				
Engine: All engines	Information: version Ducellier						2.7684PHT	3.7703RS				
Engine: All engines	Information: ->eng. 14180385, info WY									9.6091 C10		
Engine: All engines	Information: eng. type 14180386 ->, info WE									9.6092 C10		
Engine: All engines	Information: eng. type 14672353 ->, ->ch. R1..., R9..., no specific info conc. application available											4.8689
2.0 i Turbo 4x4	Petrol	150	08/91-07/97	ENGINE: C 20 LET								
Engine: All engines	Information: version Bosch						2.7530/27PHT	3.7573/21RS				
CAMPO												
2.3	Petrol	72	08/94-09/96	ENGINE: 23 P								
Engine: All engines	Information: version Denso						2.7630/24					
Engine: All engines	Information: version Hitachi						2.7960					
Engine: All engines	Information: 01/07/94 ->, version Hitachi							3.7969				
CASCADA												
1.4	Petrol	88	03/13->	ENGINE: A 14 NEL, B 14 NEL								
Engine: All engines	Information: x 1, COIL ON RAIL									9.6447 C10		
Engine: Eng. B 14 NEL	Information:									9.6447 C10		
1.4 Turbo	Petrol	103	03/13->	ENGINE: A 14 NET, B 14 NET								
Engine: All engines	Information: x 1, COIL ON RAIL									9.6447 C10		
Engine: Eng. B 14 NET	Information:									9.6447 C10		
COMBO B												
1.2	Petrol	33	07/94-10/01	ENGINE: C 12 NZ, X 12 SZ								
Engine: Eng. C 12 NZ	Information: version Bosch						2.7530/26PHT	3.7573/21RS				
Engine: Eng. C 12 NZ	Information: version Lucas						2.8100PHT	3.8128RS				
Engine: Eng. C 12 NZ	Information:									9.6040 C10	9.4036	
Engine: All engines	Information: ch. 19019894 ->, ->ch. 19334654											4.7195
Engine: All engines	Information: ch. 19334657 ->											4.7199
Engine: All engines	Information: ->ch. 19019893											4.9237
1.4	Petrol	44	07/94-10/01	ENGINE: C 14 NZ, X 14 SZ								
Engine: Eng. C 14 NZ	Information: version Bosch						2.7530/26PHT	3.7573/21RS				
Engine: Eng. C 14 NZ	Information: version Lucas						2.8100PHT	3.8128RS				
Engine: Eng. C 14 NZ	Information:									9.6040 C10	9.4036	
Engine: Eng. C 14 NZ	Information: ->ch. 02BF1475, 19241622											4.7195
Engine: Eng. C 14 NZ	Information: ch. 02BF1476, 19241623 ->, -air conditioning											4.7199
Engine: Eng. C 14 NZ	Information: ch. 02BF1476, 19241623 ->, +air conditioning											4.9529
Engine: Eng. X 14 SZ	Information: ch. 02HY3580 ->											4.9904

A10	CONDENSER	A20	CONTACT SET	A40	DISTRIBUTOR CAP	A50	ROTOR	A70	PICK-UP
C10	COIL	C20	IGNITION MODULE	C30	ELECTRONIC IGNITION KIT	E01	IGNITION CABLE SET		

The present application list is a brief version. For the detailed information about the possibility of installation on a specific vehicle, please refer to our web-catalogue http://catalogo.facet.eu/

Vehicle	alim.	kW	Date	Engine	FUNCTIONS ON THE VEHICLE A10	A20	A40	A50	A70	C10 - C30	C20	E01
1.4	Petrol	60	07/94-10/01	C 14 SE								
Engine: All engines	Information: ->ch. 02BD1412, 19262000											4.8634
Engine: All engines	Information: ch. 02HY3580 ->											4.9904
1.4 16V	Petrol	66	08/99-10/01	X 14 XE								
Engine: All engines	Information: ->ch. 20C17331											4.8688
Engine: All engines	Information: ch. 20C17332 ->											4.9559
COMBO C												
1.4	Petrol	66	10/04-12/11	Z 14 XEP								
Engine: All engines	Information: x 1, BOSCH, COIL ON PLUG, incl. spark plug connector									9.6300 C10		
1.4 16V	Petrol	66	08/05->	Z 14 XEP								
Engine: All engines	Information: x 1, BOSCH, COIL ON PLUG, incl. spark plug connector									9.6300 C10		
1.6	Petrol	64	10/01->	Z 16 SE								
Engine: All engines	Information:											4.9904
1.6 CNG	Petrol/ Compressed Natural Gas (CNG)	69	06/06-12/11	Y 16 YNG, Z 16 YNG								
Engine: All engines	Information: x 4, COIL ON PLUG, incl. spark plug connector									9.6299 C10		
1.6 CNG	Petrol/ Compressed Natural Gas (CNG)	71	04/05-01/11	Z 16 YNG								
Engine: All engines	Information: x 4, COIL ON PLUG, incl. spark plug connector									9.6299 C10		
1.6 CNG 16V	Petrol/ Compressed Natural Gas (CNG)	69	06/06->	Y 16 YNG, Z 16 YNG								
Engine: All engines	Information: x 4, COIL ON PLUG, incl. spark plug connector									9.6299 C10		
1.6 CNG 16V	Petrol/ Compressed Natural Gas (CNG)	71	04/05->	Z 16 YNG								
Engine: All engines	Information: x 4, COIL ON PLUG, incl. spark plug connector									9.6299 C10		
COMBO D												
1.4	Petrol	70	02/12->	A 14 FP								
Engine: All engines	Information: x 4, COIL ON PLUG									9.6342 C10		
CORSA A												
1.0	Petrol	33	09/82-03/93	10 S								
Engine: All engines	Information: version Bosch				0.0179/112	1.2534HDVS	2.7480PHT	3.7512RS				

A10	CONDENSER	A20	CONTACT SET	A40	DISTRIBUTOR CAP	A50	ROTOR	A70	PICK-UP
C10	COIL	C20	IGNITION MODULE	C30	ELECTRONIC IGNITION KIT	E01	IGNITION CABLE SET		

The present application list is a brief version. For the detailed information about the possibility of installation on a specific vehicle, please refer to our web-catalogue http://catalogo.facet.eu/

Vehicle	alim.	kW	Date	Engine	FUNCTIONS ON THE VEHICLE A10	A20	A40	A50	A70	C10 - C30	C20	E01

CORSA A

				ENGINE
1.0	Petrol	33	09/82-03/93	10 S

Engine	Information	A10	A20	A40	A50	A70	C10 - C30	C20	E01
All engines	version Delco Remy		1.3455HDVS	2.7566PHT	3.7595RS				
All engines					3.7593RS				4.8509

				ENGINE
1.2	Petrol	33	09/82-08/90	12 N, 12 NC, E 12 GV

Engine	Information	A10	A20	A40	A50	A70	C10 - C30	C20	E01
Eng. 12 N, 12 NC	version Bosch	0.0179/112	1.2534HDVS		3.7512RS				
All engines	->eng. 0106700, version Bosch			2.7480PHT					
Eng. 12 NC, E 12 GV	eng. type 0106701 ->, version Bosch			2.7530/26PHT					
Eng. E 12 GV	version Bosch				3.7561RS				
Eng. 12 NC, E 12 GV								9.4005	
All engines	->ch. J4999999								4.8509

				ENGINE
1.2	Petrol	40	02/86-04/89	12 ST

Engine	Information	A10	A20	A40	A50	A70	C10 - C30	C20	E01
All engines	version Delco Remy			2.7573PHT	3.7596	8.3411			
All engines	FOR: (S), ch. F4178159 ->, FOR: (CH), version Delco Remy				3.7600				
All engines							9.6241 C10		

				ENGINE
1.2	Petrol	44	09/82-08/90	12 S

Engine	Information	A10	A20	A40	A50	A70	C10 - C30	C20	E01
All engines	version Delco Remy			2.7573PHT	3.7596	8.3411			
All engines	FOR: (S), ->year 23/09/84, FOR: (CH), version Delco Remy			2.7574PHT					
All engines	FOR: (S), ch. F4178159 ->, FOR: (CH), version Delco Remy				3.7600				
All engines							9.6241 C10		

				ENGINE
1.2 i	Petrol	33	09/89-03/93	C 12 NZ

Engine	Information	A10	A20	A40	A50	A70	C10 - C30	C20	E01
All engines	version Bosch			2.7530/26PHT	3.7573/21RS				
All engines	version Lucas			2.8100PHT	3.8128RS	8.4702			
All engines							9.6040 C10	9.4036	4.9237

				ENGINE
1.2 N	Petrol	33	01/85-10/87	12 NC, E 12 GV

Engine	Information	A10	A20	A40	A50	A70	C10 - C30	C20	E01
Eng. 12 NC	version Bosch	0.0179/112	1.2534HDVS		3.7512RS				
All engines	->eng. 0106700, version Bosch			2.7480PHT					
All engines	eng. type 0106701 ->, version Bosch			2.7530/26PHT					
Eng. E 12 GV	version Bosch				3.7561RS				
All engines								9.4005	
All engines	->ch. J4999999								4.8509

				ENGINE
1.2 N	Petrol	38	01/90-03/93	12 NV

Engine	Information	A10	A20	A40	A50	A70	C10 - C30	C20	E01
All engines	version Delco Remy			2.7573PHT	3.7596	8.3411			
All engines	FOR: (S), ch. F4178159 ->, FOR: (CH), version Delco Remy				3.7600				
All engines							9.6241 C10		

				ENGINE
1.2 S	Petrol	40	09/82-03/93	12 ST

Engine	Information	A10	A20	A40	A50	A70	C10 - C30	C20	E01
All engines	version Delco Remy			2.7573PHT	3.7596	8.3411			
All engines	FOR: (S), ch. F4178159 ->, FOR: (CH), version Delco Remy				3.7600				
All engines							9.6241 C10		

				ENGINE
1.2 S	Petrol	43	09/82-10/87	12 S

Engine	Information	A10	A20	A40	A50	A70	C10 - C30	C20	E01
All engines	version Delco Remy			2.7573PHT	3.7596	8.3411			
All engines	FOR: (S), ->year 23/09/84, FOR: (CH), version Delco Remy			2.7574PHT					

A10	CONDENSER	A20	CONTACT SET	A40	DISTRIBUTOR CAP	A50	ROTOR	A70	PICK-UP
C10	COIL	C20	IGNITION MODULE	C30	ELECTRONIC IGNITION KIT	E01	IGNITION CABLE SET		

The present application list is a brief version. For the detailed information about the possibility of installation on a specific vehicle, please refer to our web-catalogue http://catalogo.facet.eu/

Vehicle	alim.	kW	Date	Engine	FUNCTIONS ON THE VEHICLE A10	A20	A40	A50	A70	C10 - C30	C20	E01
1.2 S	Petrol	43	09/82-10/87	12 S								
All engines	FOR: (S), ch. F4178159 ->, FOR: (CH), version Delco Remy							3.7600				
All engines										9.6241 C10		
1.3	Petrol	44	09/85-10/89	13 NB, C 13 N								
Eng. 13 NB	24/09/84 ->, version Delco Remy						2.7573PHT					
Eng. 13 NB	->year 23/09/84, version Delco Remy						2.7574PHT					
Eng. 13 NB	version Delco Remy							3.7600	8.3411			
Eng. C 13 N	version Delco Remy								8.3410			
All engines										9.6241 C10		
Eng. C 13 N											9.4025	
1.3	Petrol	51	02/86-04/89	13 SB								
All engines	version Delco Remy						2.7573PHT	3.7596	8.3411			
All engines										9.6241 C10		
1.3 GL	Petrol	55	09/82-03/93	13 S								
All engines	version Delco Remy						2.7573PHT	3.7596	8.3411			
All engines										9.6241 C10		
1.3 i	Petrol	44	09/86-09/90	C 13 N								
All engines	version Delco Remy								8.3410			
All engines										9.6241 C10	9.4025	
1.3 S	Petrol	51	09/82-10/89	13 SB								
All engines	version Delco Remy						2.7573PHT	3.7596	8.3411			
All engines										9.6241 C10		
1.4 i	Petrol	40	01/85-03/93	C 14 NZ								
All engines	version Bosch						2.7530/19PHT	3.7573/21RS				
All engines										9.6040 C10	9.4036	4.9237
1.4 i	Petrol	44	10/89-03/93	C 14 NZ								
All engines	version Bosch						2.7530/19PHT	3.7573/21RS				
All engines										9.6040 C10	9.4036	4.9237
1.4 S	Petrol	53	09/89-03/93	14 NV								
All engines	version Bosch						2.7530/26PHT	3.7556RS				
All engines											9.4005	4.9237
1.4 Si	Petrol	60	09/91-03/93	C 14 SE								
All engines	->eng. 02T14052, version Lucas						2.8100PHT	3.8128RS				
All engines	->eng. 02T14052									9.6040 C10	9.4036	4.9237
All engines	eng. type 02T14053 ->											4.8634
1.6 GSI	Petrol	55	08/88-09/92	C 16 NZ								
All engines	version Delco Remy								8.3410			
All engines										9.6241 C10		4.8514

A10	CONDENSER	A20	CONTACT SET	A40	DISTRIBUTOR CAP	A50	ROTOR	A70	PICK-UP
C10	COIL	C20	IGNITION MODULE	C30	ELECTRONIC IGNITION KIT	E01	IGNITION CABLE SET		

The present application list is a brief version. For the detailed information about the possibility of installation on a specific vehicle, please refer to our web-catalogue http://catalogo.facet.eu/

Vehicle	alim.	kW	Date	Engine	FUNCTIONS ON THE VEHICLE A10	A20	A40	A50	A70	C10 - C30	C20	E01
1.6 GSI	Petrol	74	05/88-03/92	ENGINE E 16 SE								

Engine	Information	A10	A20	A40	A50	A70	C10 - C30	C20	E01
All engines	distr. num. 0 237 506 012, version Bosch			2.7480PHT	3.7556RS				
All engines	distr. num. 0 237 521 024, version Bosch, connector type SAE			2.7530/19PHT					
All engines	distr. num. 0 237 521 024, version Bosch, connector type M4			2.7530/26PHT					
All engines	version Lucas			2.8100PHT	3.8128RS	8.4702			
All engines	distr. num. 0 237 521 024, version Bosch				3.7573/21RS				
All engines	ch. L4000001 ->						9.6040 C10	9.4036	

CORSA B

1.0 i 12V	Petrol	40	11/96-09/00	ENGINE X 10 XE

Engine	Information	A10	A20	A40	A50	A70	C10 - C30	C20	E01
All engines							9.6298 C10		

1.2 i	Petrol	33	03/93-09/00	ENGINE 12 NZ, C 12 NZ, X 12 SZ

Engine	Information	A10	A20	A40	A50	A70	C10 - C30	C20	E01
Eng. 12 NZ, C 12 NZ	version Bosch			2.7530/26PHT	3.7573/21RS				
Eng. 12 NZ, C 12 NZ	version Lucas			2.8100PHT	3.8128RS				
Eng. 12 NZ, C 12 NZ							9.6040 C10	9.4036	
All engines	ch. 19019894 ->, ->ch. 19334654								4.7195
All engines	ch. 19334657 ->								4.7199
All engines	->ch. 19019893								4.9237

1.2 i 16V	Petrol	48	03/98-09/00	ENGINE X 12 XE

Engine	Information	A10	A20	A40	A50	A70	C10 - C30	C20	E01
All engines							9.6300 C10		

1.4	Petrol	54	04/93-08/94	ENGINE C 14 SE

Engine	Information	A10	A20	A40	A50	A70	C10 - C30	C20	E01
All engines	->ch. 02BD1412, 19262000								4.8634
All engines	ch. 02HY3580 ->								4.9904

1.4 i	Petrol	40	03/93-09/00	ENGINE C 14 NZ, X 14 SZ

Engine	Information	A10	A20	A40	A50	A70	C10 - C30	C20	E01
Eng. C 14 NZ	version Bosch			2.7530/26PHT	3.7573/21RS				
Eng. C 14 NZ	version Lucas			2.8100PHT	3.8128RS				
Eng. C 14 NZ							9.6040 C10	9.4036	
Eng. C 14 NZ	->ch. 02BF1475, 19241622								4.7195
Eng. C 14 NZ	ch. 02BF1476, 19241623 ->, -air conditioning								4.7199
Eng. C 14 NZ	ch. 02BF1476, 19241623 ->, +air conditioning								4.9529
Eng. X 14 SZ	ch. 02HY3580 ->								4.9904

1.4 i	Petrol	44	03/93-09/00	ENGINE C 14 NZ, X 14 SZ

Engine	Information	A10	A20	A40	A50	A70	C10 - C30	C20	E01
Eng. C 14 NZ	version Bosch			2.7530/26PHT	3.7573/21RS				
Eng. C 14 NZ	version Lucas			2.8100PHT	3.8128RS				
Eng. C 14 NZ							9.6040 C10	9.4036	
Eng. C 14 NZ	->ch. 02BF1475, 19241622								4.7195
Eng. C 14 NZ	ch. 02BF1476, 19241623 ->, -air conditioning								4.7199
Eng. C 14 NZ	ch. 02BF1476, 19241623 ->, +air conditioning								4.9529
Eng. X 14 SZ	ch. 02HY3580 ->								4.9904

1.4 i 16V	Petrol	63	08/97-09/00	ENGINE C 14 SEL

Engine	Information	A10	A20	A40	A50	A70	C10 - C30	C20	E01
All engines	->ch. 20C17331								4.8688
All engines	ch. 20C17332 ->								4.9559

1.4 i 16V	Petrol	66	09/94-12/02	ENGINE X 14 XE

Engine	Information	A10	A20	A40	A50	A70	C10 - C30	C20	E01
All engines	->ch. 20C17331								4.8688
All engines	ch. 20C17332 ->								4.9559

A10	CONDENSER	A20	CONTACT SET	A40	DISTRIBUTOR CAP	A50	ROTOR	A70	PICK-UP
C10	COIL	C20	IGNITION MODULE	C30	ELECTRONIC IGNITION KIT	E01	IGNITION CABLE SET		

The present application list is a brief version. For the detailed information about the possibility of installation on a specific vehicle, please refer to our web-catalogue http://catalogo.facet.eu/

Vehicle	alim.	kW	Date	Engine	FUNCTIONS ON THE VEHICLE A10	A20	A40	A50	A70	C10 - C30	C20	E01
1.4 i 16V	Petrol	67	09/94-09/00	**X 14 XE**								
Engine: All engines	Information: ->ch. 20C17331											4.8688
Engine: All engines	Information: ch. 20C17332 ->											4.9559
1.4 Si	Petrol	60	03/93-09/00	**C 14 SE**								
Engine: All engines	Information: ->ch. 02BD1412, 19262000											4.8634
Engine: All engines	Information: ch. 02HY3580 ->											4.9904
1.6 GSI 16V	Petrol	80	03/93-09/00	**C 16 XE**								
Engine: All engines	Information: ->ch. 20C17331											4.8688
Engine: All engines	Information: ch. 20C17332 ->											4.9559
1.6 i 16V	Petrol	74	08/97-09/00	**C 16 SEL**								
Engine: All engines	Information: ->ch. 20C17331											4.8688
Engine: All engines	Information: ch. 20C17332 ->											4.9559
1.6 i 16V	Petrol	78	09/94-09/00	**X 16 XE**								
Engine: All engines	Information: ->ch. 20C17331											4.8688
Engine: All engines	Information: ch. 20C17332 ->											4.9559
CORSA C												
1.0	Petrol	43	09/00-06/03	**1K10CT**								
Engine: All engines	Information: x 3, BOSCH, COIL ON PLUG									9.6298 C10		
1.0	Petrol	44	06/03-12/09	**Z 10 XEP**								
Engine: All engines	Information: x 3, BOSCH, COIL ON PLUG, 12 Volt, Dia: 55 mm, for pre-resistance									9.6298 C10		
1.2	Petrol	55	09/00-12/09	**Z 12 XE**								
Engine: All engines	Information: ->ch. 36999999, ch. 37000000 ->, x 1, x 4, BOSCH, COIL ON PLUG, incl. spark plug connector									9.6300 C10		
1.2	Petrol	59	07/05-06/06	**Z 12 XEP**								
Engine: All engines	Information: x 1, BOSCH, COIL ON PLUG, incl. spark plug connector									9.6300 C10		
1.2 16V	Petrol	55	09/00-07/03	**Z 12 XE**								
Engine: All engines	Information: ->ch. 36999999, ch. 37000000 ->, x 1, x 4, BOSCH, COIL ON PLUG, incl. spark plug connector									9.6300 C10		
1.2 Twinport	Petrol	59	07/04-12/09	**Z 12 XEP**								
Engine: All engines	Information: x 1, BOSCH, COIL ON PLUG, incl. spark plug connector									9.6300 C10		
1.4	Petrol	66	09/00-06/12	**Z 14 XE, Z 14 XEP**								
Engine: Eng. Z 14 XE	Information: x 4, COIL ON PLUG, incl. spark plug connector									9.6299 C10		
Engine: Eng. Z 14 XEP	Information: x 1, BOSCH, COIL ON PLUG, incl. spark plug connector									9.6300 C10		
1.4 Twinport	Petrol	66	06/03-12/09	**Z 14 XEP**								
Engine: All engines	Information: x 1, BOSCH, COIL ON PLUG, incl. spark plug connector									9.6300 C10		

A10	CONDENSER	**A20**	CONTACT SET	**A40**	DISTRIBUTOR CAP	**A50**	ROTOR	**A70**	PICK-UP
C10	COIL	**C20**	IGNITION MODULE	**C30**	ELECTRONIC IGNITION KIT	**E01**	IGNITION CABLE SET		

The present application list is a brief version. For the detailed information about the possibility of installation on a specific vehicle, please refer to our web-catalogue http://catalogo.facet.eu/

Vehicle	alim.	kW	Date	Engine	FUNCTIONS ON THE VEHICLE A10	A20	A40	A50	A70	C10 - C30	C20	E01
1.6	Petrol	62	09/00->	Z 16 SE								
Engine: All engines	Information:											4.9904
1.6 CNG	CNG	69	05/03-12/09	Y 16 YNG								
Engine: All engines	Information:									9.6299 C10		
1.6 X	Petrol	71	08/05->	Z 16 YNG								
Engine: All engines	Information:									9.6299 C10		
1.8	Petrol	92	09/00-12/09	Z 18 XE								
Engine: All engines	Information: x 1, COIL ON PLUG, incl. spark plug connector									9.6408 C10		
CORSA D												
1.0	Petrol	44	07/06-08/14	Z 10 XEP								
Engine: All engines	Information: x 3, BOSCH, COIL ON PLUG, 12 Volt, Dia: 55 mm, for pre-resistance									9.6298 C10		
1.2	Petrol	51	12/09-08/14	A 12 XEL								
Engine: All engines	Information: x 1, COIL ON RAIL									9.6447 C10		
1.2	Petrol	59	07/06-08/14	Z 12 XEP								
Engine: All engines	Information: x 1, BOSCH, COIL ON PLUG, incl. spark plug connector									9.6300 C10		
1.2	Petrol	63	12/09-08/14	A 12 XER								
Engine: All engines	Information: x 1, COIL ON RAIL									9.6447 C10		
1.2 LPG	Petrol/ Liquified Petro-leum Gas (LPG)	55	09/09-12/11	Z 12 XEP								
Engine: All engines	Information: x 1, BOSCH, COIL ON PLUG, incl. spark plug connector									9.6300 C10		
1.2 LPG	Petrol/ Liquified Petro-leum Gas (LPG)	59	08/06-08/14	Z 12 XEP								
Engine: All engines	Information: x 1, BOSCH, COIL ON PLUG, incl. spark plug connector									9.6300 C10		
1.2 LPG	Petrol/ Liquified Petro-leum Gas (LPG)	61	06/11-08/14	A 12 XER								
Engine: All engines	Information: x 1, COIL ON RAIL									9.6447 C10		
1.2 LPG	Petrol/ Liquified Petro-leum Gas (LPG)	63	06/11-08/14	A 12 XER								
Engine: All engines	Information: x 1, COIL ON RAIL									9.6447 C10		

A10	CONDENSER	A20	CONTACT SET	A40	DISTRIBUTOR CAP	A50	ROTOR	A70	PICK-UP
C10	COIL	C20	IGNITION MODULE	C30	ELECTRONIC IGNITION KIT	E01	IGNITION CABLE SET		

The present application list is a brief version. For the detailed information about the possibility of installation on a specific vehicle, please refer to our web-catalogue http://catalogo.facet.eu/

Vehicle	alim.	kW	Date	Engine	FUNCTIONS ON THE VEHICLE							
					A10	A20	A40	A50	A70	C10 - C30	C20	E01
1.4	Petrol	64	09/09-08/14	ENGINE A 14 XEL								
Engine: All engines				Information: x 1, COIL ON RAIL						9.6447 C10		
1.4	Petrol	66	07/06-08/14	ENGINE Z 14 XEP								
Engine: All engines				Information: x 1, BOSCH, COIL ON PLUG, incl. spark plug connector						9.6300 C10		
1.4	Petrol	74	12/09-08/14	ENGINE A 14 XER								
Engine: All engines				Information: x 1, COIL ON RAIL						9.6447 C10		
1.4	Petrol	88	07/12-08/14	ENGINE A 14 NEL								
Engine: All engines				Information: x 1, COIL ON RAIL						9.6447 C10		
1.4 LPG	Petrol/ Liquified Petro-leum Gas (LPG)	64	09/09-08/14	ENGINE A 14 XEL								
Engine: All engines				Information: x 1, COIL ON RAIL						9.6447 C10		
1.4 LPG	Petrol/ Liquified Petro-leum Gas (LPG)	66	08/06-12/11	ENGINE Z 14 XEP								
Engine: All engines				Information: x 1, BOSCH, COIL ON PLUG, incl. spark plug connector						9.6300 C10		
1.6	Petrol	141	07/12-08/14	ENGINE Z 16 LER								
Engine: All engines				Information: x 1, DELPHI, COIL ON PLUG, incl. spark plug connector						9.6350 C10		
1.6 Turbo	Petrol	110	05/07-08/14	ENGINE A 16 LEL, Z 16 LEL								
Engine: All engines				Information: x 1, DELPHI, COIL ON PLUG, incl. spark plug connector						9.6350 C10		
1.6 Turbo	Petrol	141	11/06-08/14	ENGINE A 16 LER, B 16 LER, Z 16 LER								
Engine: All engines				Information: x 1, DELPHI, COIL ON PLUG, incl. spark plug connector						9.6350 C10		
1.6 Turbo	Petrol	155	06/11-08/14	ENGINE A 16 LES								
Engine: All engines				Information: x 1, DELPHI, COIL ON PLUG, incl. spark plug connector						9.6350 C10		
CORSA E												
1.0	Petrol	66	09/14->	ENGINE B 10 XFL, D 10 XFL, F 10 XFL								
Engine: All engines				Information: x 3, COIL ON PLUG						9.6531 C10		
1.0	Petrol	85	09/14->	ENGINE B 10 XFT								
Engine: All engines				Information: x 3, COIL ON PLUG						9.6531 C10		
1.2	Petrol	51	09/14->	ENGINE B 12 XEL								
Engine: All engines				Information: x 1, COIL ON RAIL						9.6447 C10		

A10	CONDENSER	A20	CONTACT SET	A40	DISTRIBUTOR CAP	A50	ROTOR	A70	PICK-UP
C10	COIL	C20	IGNITION MODULE	C30	ELECTRONIC IGNITION KIT	E01	IGNITION CABLE SET		

The present application list is a brief version. For the detailed information about the possibility of installation on a specific vehicle, please refer to our web-catalogue http://catalogo.facet.eu/

Vehicle	alim.	kW	Date	Engine	FUNCTIONS ON THE VEHICLE: A10	A20	A40	A50	A70	C10 - C30	C20	E01
1.4	Petrol	55	09/14->	B 14 XEJ								
Engine: All engines	Information: x 1, COIL ON RAIL									9.6447 C10		
1.4	Petrol	66	09/14->	B 14 XEL, D 14 XEL								
Engine: All engines	Information: x 1, COIL ON RAIL									9.6447 C10		
1.4 LPG	Petrol/ Liquified Petro-leum Gas (LPG)	64	11/15->	B 14 XEL								
Engine: All engines	Information: x 1, COIL ON RAIL									9.6447 C10		
1.4 LPG	Petrol/ Liquified Petro-leum Gas (LPG)	66	03/15->	B 14 XEL								
Engine: All engines	Information: x 1, COIL ON RAIL									9.6447 C10		
1.4 Turbo	Petrol	110	03/15->	B 14 NEH, D 14 NEH								
Engine: All engines	Information: x 1, COIL ON RAIL									9.6447 C10		
1.4 Turbo	Petrol	74	09/14-06/19	B 14 NEJ, D 14 NEJ								
Engine: All engines	Information: x 1, COIL ON RAIL									9.6447 C10		
1.6 Turbo	Petrol	152	03/15->	B 16 LER, B 16 LES								
Engine: All engines	Information: x 1, COIL ON PLUG									9.6445 C10		
CORSA F												
1.2	Petrol	55	07/19->	F 12 XEL (EB2FAD)								
Engine: All engines	Information: x 3, COIL ON PLUG									9.6509 C10		
CROSSLAND X												
1.2	Petrol	61	07/19->	F 12 XE (EB2FA)								
Engine: All engines	Information: x 3, COIL ON PLUG									9.6509 C10		
FRONTERA A												
2.0 i	Petrol	85	03/92-10/98	C 20 NE, X 20 SE								
Eng. C 20 NE	version Bosch						2.7530/27PHT	3.7573/27RS				
Eng. C 20 NE	version Ducellier						2.7684PHT	3.7703RS				
Eng. C 20 NE										9.6092 C10		
Eng. X 20 SE										9.6173 C10		4.9947
Eng. C 20 NE	->eng. 14672353											4.8527
Eng. C 20 NE	eng. type 14672354 ->											4.8689
2.2 i	Petrol	100	03/95-10/98	X 22 XE								
Engine: All engines	Information:									9.6173 C10		
2.4 i	Petrol	92	03/92-10/98	C 24 NE								
All engines	version Bosch						2.7530/26PHT	3.7573/21RS				
All engines										9.6092 C10		

A10	CONDENSER	A20	CONTACT SET	A40	DISTRIBUTOR CAP	A50	ROTOR	A70	PICK-UP
C10	COIL	C20	IGNITION MODULE	C30	ELECTRONIC IGNITION KIT	E01	IGNITION CABLE SET		

The present application list is a brief version. For the detailed information about the possibility of installation on a specific vehicle, please refer to our web-catalogue http://catalogo.facet.eu/

Vehicle	alim.	kW	Date	Engine	FUNCTIONS ON THE VEHICLE							
					A10	A20	A40	A50	A70	C10 - C30	C20	E01
GRANDLAND / GRANDLAND X												
				ENGINE								
1.2	Petrol	96	06/17->	B 12 XHT (EB2DTS)								
Engine: All engines — Information: x 3, COIL ON PLUG										9.6520 C10		
1.6 Turbo	Petrol	110	12/19->	A 16 XHL (EP6FDTMD)								
Engine: All engines — Information: x 4, COIL ON PLUG										9.6375 C10		
1.6 Turbo	Petrol	133	09/18->	D 16 XHT (EP6FADTXD)								
Engine: All engines — Information: x 4, COIL ON PLUG										9.6375 C10		
1.6 Turbo Hybrid	Petrol/ Electric	133	12/19->	F 16 XHR (EP6FADTXD)								
Engine: All engines — Information: x 4, COIL ON PLUG										9.6375 C10		
1.6 Turbo Hybrid	Petrol/ Electric	165	12/19->	F 16 XHR (EP6FADTXD)								
Engine: All engines — Information: x 4, COIL ON PLUG										9.6375 C10		
1.6 Turbo Hybrid4	Petrol/ Electric	147	06/19->	F 16 XHR (EP6FADTXD)								
Engine: All engines — Information: x 4, COIL ON PLUG										9.6375 C10		
1.6 Turbo Hybrid4	Petrol/ Electric	221	06/19->	F 16 XHR (EP6FADTXD)								
Engine: All engines — Information: x 4, COIL ON PLUG										9.6375 C10		
GT												
				ENGINE								
1.1	Petrol	44	09/68-12/70	11 SR								
Engine: All engines — Information:							2.7462					
Engine: All engines — Information: version BOSCH							2.7476PHT					
1.9	Petrol	66	09/68-08/73	19 S								
Engine: All engines — Information: version BOSCH							2.7476PHT					
INSIGNIA A												
				ENGINE								
1.4	Petrol	103	04/11->	A 14 NET, B 14 NET, B 18 XER								
Engine: Eng. B 18 XER — Information:										9.6445 C10		
Engine: Eng. A 14 NET, B 14 NET — Information: x 1, COIL ON RAIL										9.6447 C10		
1.4 LPG	Petrol/ Liquified Petro-leum Gas (LPG)	103	07/12-03/17	A 14 NET, B 14 NET								
Engine: All engines — Information: x 1, COIL ON RAIL										9.6447 C10		
1.6	Petrol	85	07/08-03/17	A 16 XER								
Engine: All engines — Information: x 1, COIL ON PLUG										9.6445 C10		

A10	CONDENSER	A20	CONTACT SET	A40	DISTRIBUTOR CAP	A50	ROTOR	A70	PICK-UP
C10	COIL	C20	IGNITION MODULE	C30	ELECTRONIC IGNITION KIT	E01	IGNITION CABLE SET		

The present application list is a brief version. For the detailed information about the possibility of installation on a specific vehicle, please refer to our web-catalogue http://catalogo.facet.eu/

Vehicle	alim.	kW	Date	Engine	FUNCTIONS ON THE VEHICLE: A10	A20	A40	A50	A70	C10 - C30	C20	E01
1.6 Turbo	Petrol	132	07/08-03/17	A 16 LET								
Engine: All engines	Information: x 1, DELPHI, COIL ON PLUG, incl. spark plug connector									9.6350 C10		
1.8	Petrol	103	07/08-03/17	A 18 XER, B 18 XER								
Engine: All engines	Information: x 1, COIL ON PLUG									9.6445 C10		
INSIGNIA B												
1.5	Petrol	103	03/17->	B 15 SFL, D 15 SFL								
Engine: All engines	Information: x 4, COIL ON PLUG									9.6531 C10		
1.5	Petrol	121	03/17->	B 15 SFT, D 15 SFT								
Engine: All engines	Information: x 4, COIL ON PLUG									9.6531 C10		
KADETT B												
1.1	Petrol	37	08/71-08/73	11 N								
Engine: All engines	Information: version Bosch				0.0179/112	1.2534HDVS	2.7480PHT	3.7512RS				
Engine: All engines	Information: version Delco Remy					1.3455HDVS	2.7566PHT	3.7593				
KADETT C												
1.2	Petrol	38	05/75-04/77	12 N								
Engine: All engines	Information:							3.7593RS				
1.2	Petrol	40	07/76-07/79	12 N								
Engine: All engines	Information:							3.7593RS				
1.2 S	Petrol	44	08/73-07/79	12 S								
Engine: All engines	Information:							3.7593RS				
1.6 S	Petrol	55	09/76-07/79	16 S								
Engine: All engines	Information:							3.7593RS				
KADETT D												
1.0	Petrol	30	09/79-08/82	10 N								
Engine: All engines	Information: version Bosch				0.0179/112	1.2534HDVS	2.7480PHT	3.7512RS				
Engine: All engines	Information: version Delco Remy					1.3455HDVS	2.7566PHT	3.7593				
1.2	Petrol	40	08/82-08/84	12 ST								
Engine: All engines	Information: version Delco Remy						2.7573PHT	3.7596	8.3411			
Engine: All engines	Information:									9.6241 C10		4.8514
1.3 S	Petrol	55	08/79-08/84	13 S								
Engine: All engines	Information: version Bosch					1.2549HDVS	2.7499	3.7526RS				
KADETT E												
1.2	Petrol	40	09/84-08/88	12 SC, 12 ST								
Engine: Eng. 12 SC	Information: version Bosch				0.0179/112	1.2534HDVS	2.7480PHT	3.7512RS				
Engine: Eng. 12 SC	Information: version Delco Remy					1.3455HDVS	2.7566PHT	3.7595RS				
Engine: Eng. 12 SC	Information:							3.7593RS				4.8509

A10	CONDENSER	A20	CONTACT SET	A40	DISTRIBUTOR CAP	A50	ROTOR	A70	PICK-UP
C10	COIL	C20	IGNITION MODULE	C30	ELECTRONIC IGNITION KIT	E01	IGNITION CABLE SET		

The present application list is a brief version. For the detailed information about the possibility of installation on a specific vehicle, please refer to our web-catalogue http://catalogo.facet.eu/

Vehicle	alim.	kW	Date	Engine	FUNCTIONS ON THE VEHICLE A10	A20	A40	A50	A70	C10 - C30	C20	E01

KADETT E

1.2 | Petrol | 40 | 09/84-08/88 | ENGINE: 12 SC, 12 ST

Engine	Information	A10	A20	A40	A50	A70	C10 - C30		C20	E01
Eng. 12 ST										4.8514

1.3 i Cat | Petrol | 44 | 09/85-08/91 | ENGINE: C 13 N

Engine	Information	A10	A20	A40	A50	A70	C10 - C30		C20	E01
All engines	version Delco Remy			2.7573PHT	3.7600	8.3410				
All engines							9.6241	C10	9.4025	4.8514

1.3 N | Petrol | 44 | 09/84-08/91 | ENGINE: 13 N, 13 NB

Engine	Information	A10	A20	A40	A50	A70	C10 - C30		C20	E01
All engines	version Delco Remy			2.7573PHT	3.7596	8.3411				
All engines	FOR: (S), FOR: (CH), version Delco Remy			2.7574PHT	3.7600					
All engines							9.6241	C10		4.8514

1.3 S | Petrol | 55 | 09/84-02/93 | ENGINE: 13 S

Engine	Information	A10	A20	A40	A50	A70	C10 - C30		C20	E01
All engines	version Delco Remy			2.7573PHT	3.7596	8.3411				
All engines	FOR: (S), FOR: (CH), version Delco Remy			2.7574PHT	3.7600					
All engines							9.6241	C10		4.8514

1.4 i | Petrol | 44 | 01/90-07/94 | ENGINE: C 14 NZ

Engine	Information	A10	A20	A40	A50	A70	C10 - C30		C20	E01
All engines	connector type SAE, version Bosch			2.7530/19PHT						
All engines	connector type M4, version Bosch			2.7530/26PHT						
All engines	version Lucas			2.8100PHT	3.8128RS					
All engines	version Bosch				3.7573/21RS					
All engines							9.6040	C10	9.4036	4.9237

1.4 S | Petrol | 55 | 07/89-02/93 | ENGINE: 14 NV

Engine	Information	A10	A20	A40	A50	A70	C10 - C30		C20	E01
All engines	version Bosch			2.7530/26PHT	3.7556RS					
All engines									9.4005	4.9237

1.6 | Petrol | 60 | 09/86-12/91 | ENGINE: 16 SV

Engine	Information	A10	A20	A40	A50	A70	C10 - C30		C20	E01
All engines	->ch. K2500000, ->ch. K5000000, ->ch. KE299999, version Bosch			2.7530/19PHT						
All engines	ch. L2500001 ->, ch. L5000001 ->, ch. LE100001 ->, version Bosch			2.7530/26PHT						
All engines	24/09/84 ->, version Delco Remy			2.7573PHT						
All engines	->year 23/09/84, version Delco Remy			2.7574PHT						
All engines	->ch. K2500000, ->ch. K5000000, ->ch. KE299999, version Lucas			2.8099PHT						
All engines	ch. L2500001 ->, ch. L5000001 ->, ch. LE100001 ->, version Lucas			2.8100PHT						
All engines	version Bosch				3.7573/21RS				9.4036	
All engines	version Delco Remy				3.7600	8.3411				
All engines	version Lucas				3.8128RS					
All engines	info XE						9.6040	C10		
All engines	info XF						9.6241	C10		
All engines	->eng. 02E85672									4.8514
All engines	eng. type 02N39786 ->									4.9237

1.6 i | Petrol | 55 | 09/86-07/94 | ENGINE: C 16 NZ, E 16 NZ

Engine	Information	A10	A20	A40	A50	A70	C10 - C30		C20	E01
All engines	version Delco Remy			2.7573PHT	3.7600	8.3410				
All engines							9.6241	C10	9.4025	
All engines	ch. J2508724, J5008434 ->, ->eng. 02V65825									4.8514
All engines	->ch. J2508723, J5008433									4.9942

A10	CONDENSER	A20	CONTACT SET	A40	DISTRIBUTOR CAP	A50	ROTOR	A70	PICK-UP
C10	COIL	C20	IGNITION MODULE	C30	ELECTRONIC IGNITION KIT	E01	IGNITION CABLE SET		

The present application list is a brief version. For the detailed information about the possibility of installation on a specific vehicle, please refer to our web-catalogue http://catalogo.facet.eu/

Vehicle	alim.	kW	Date	Engine	FUNCTIONS ON THE VEHICLE							
					A10	A20	A40	A50	A70	C10 - C30	C20	E01

				ENGINE
1.6 i	Petrol	60	07/89-02/93	16 SV

Engine	Information	A10	A20	A40	A50	A70	C10 - C30		C20	E01
All engines	->ch. K2500000, ->ch. K5000000, ->ch. KE299999, version Bosch			2.7530/19PHT						
All engines	ch. L2500001 ->, ch. L5000001 ->, ch. LE100001 ->, version Bosch			2.7530/26PHT						
All engines	24/09/84 ->, version Delco Remy			2.7573PHT						
All engines	->year 23/09/84, version Delco Remy			2.7574PHT						
All engines	->ch. K2500000, ->ch. K5000000, ->ch. KE299999, version Lucas			2.8099PHT						
All engines	ch. L2500001 ->, ch. L5000001 ->, ch. LE100001 ->, version Lucas			2.8100PHT						
All engines	version Bosch				3.7573/21RS				9.4036	
All engines	version Delco Remy				3.7600	8.3411				
All engines	version Lucas				3.8128RS					
All engines	info XE						9.6040	C10		
All engines	info XF						9.6241	C10		
All engines	->eng. 02E85672									4.8514
All engines	eng. type 02N39786 ->									4.9237

				ENGINE
1.6 i Cat	Petrol	55	09/86-02/93	C 16 LZ, C 16 NZ

Engine	Information	A10	A20	A40	A50	A70	C10 - C30		C20	E01
All engines	version Delco Remy			2.7573PHT	3.7600	8.3410				
All engines							9.6241	C10	9.4025	
All engines	ch. J2508724, J5008434 ->, ->eng. 02V65825									4.8514
All engines	->ch. J2508723, J5008433									4.9942

				ENGINE
1.6 S	Petrol	60	09/86-08/91	16 SV

Engine	Information	A10	A20	A40	A50	A70	C10 - C30		C20	E01
All engines	->ch. K2500000, ->ch. K5000000, ->ch. KE299999, version Bosch			2.7530/19PHT						
All engines	ch. L2500001 ->, ch. L5000001 ->, ch. LE100001 ->, version Bosch			2.7530/26PHT						
All engines	24/09/84 ->, version Delco Remy			2.7573PHT						
All engines	->year 23/09/84, version Delco Remy			2.7574PHT						
All engines	->ch. K2500000, ->ch. K5000000, ->ch. KE299999, version Lucas			2.8099PHT						
All engines	ch. L2500001 ->, ch. L5000001 ->, ch. LE100001 ->, version Lucas			2.8100PHT						
All engines	version Bosch				3.7573/21RS				9.4036	
All engines	version Delco Remy				3.7600	8.3411				
All engines	version Lucas				3.8128RS					
All engines	info XE						9.6040	C10		
All engines	info XF						9.6241	C10		
All engines	->eng. 02E85672									4.8514
All engines	eng. type 02N39786 ->									4.9237

				ENGINE
1.6 S	Petrol	66	09/84-08/86	16 S

Engine	Information	A10	A20	A40	A50	A70	C10 - C30		C20	E01
All engines	version Bosch			2.7480PHT	3.7556RS					
All engines	info XE						9.6040	C10		
All engines	info XF						9.6241	C10		
All engines									9.4004	
All engines	FOR: (S), FOR: (CH)								9.4034	

				ENGINE
1.8	Petrol	82	01/86-08/91	18 SE

Engine	Information	A10	A20	A40	A50	A70	C10 - C30		C20	E01
All engines	->eng. 14258179, version Bosch			2.7530/10PHT						
All engines	eng. type 14258180 ->, version Bosch			2.7530/27PHT						
All engines	version Ducellier			2.7684PHT	3.7703RS					
All engines	version Bosch				3.7573/27RS					
All engines	->ch. KE299999, ->ch. L2500000, ->ch. L5000000, ->ch. LB523999, eng. type 14258180 ->						9.6040	C10		
All engines									9.4004	
All engines	FOR: (S), FOR: (CH)								9.4034	

A10	CONDENSER	A20	CONTACT SET	A40	DISTRIBUTOR CAP	A50	ROTOR	A70	PICK-UP
C10	COIL	C20	IGNITION MODULE	C30	ELECTRONIC IGNITION KIT	E01	IGNITION CABLE SET		

The present application list is a brief version. For the detailed information about the possibility of installation on a specific vehicle, please refer to our web-catalogue http://catalogo.facet.eu/

Vehicle	alim.	kW	Date	Engine	FUNCTIONS ON THE VEHICLE A10	A20	A40	A50	A70	C10 - C30	C20	E01
1.8 E	Petrol	74	10/85-08/86	ENGINE C 18 NE								
Engine	Information						2.7480PHT	3.7556RS				
All engines	version Bosch											
1.8 GSI	Petrol	85	09/84-08/86	ENGINE 18 E								
Engine	Information											
All engines	version Bosch						2.7480PHT	3.7556RS				
All engines											9.4004	
All engines	FOR: (S), FOR: (CH)										9.4034	
1.8 i	Petrol	66	08/84-09/92	ENGINE C 18 NT, C 18 NZ, S 18 NV								
Engine	Information											
Eng. C 18 NT	version Bosch						2.7480PHT	3.7556RS				
Eng. S 18 NV	->eng. 14258179, version Bosch						2.7530/10PHT					
Eng. C 18 NZ, S 18 NV	eng. type 14258180 ->, version Bosch						2.7530/27PHT					
Eng. C 18 NZ, S 18 NV	version Ducellier						2.7684PHT	3.7703RS				
Eng. C 18 NZ, S 18 NV	version Bosch							3.7573/27RS				
Eng. C 18 NZ										9.6040 C10		
Eng. S 18 NV	ch. J2791968 ->, ch. J5273428 ->, ch. JE215466 ->, ->eng. 14258179, info WY									9.6091 C10		
Eng. S 18 NV	eng. type 14258180 ->, info WE									9.6092 C10		
Eng. S 18 NV	->ch. J2791967, ->ch. J5273427, ->ch. JE215465									9.6094 C10		
Eng. S 18 NV	eng. type 14275382 ->											4.8689
1.8 i	Petrol	74	10/85-08/86	ENGINE C 18 NE								
Engine	Information											
All engines	version Bosch						2.7480PHT	3.7556RS				
1.8 i	Petrol	85	09/84-08/86	ENGINE 18 E								
Engine	Information											
All engines	version Bosch						2.7480PHT	3.7556RS				
All engines										9.6009 C10	9.4004	
All engines	FOR: (S), FOR: (CH)										9.4034	
1.8 S	Petrol	62	09/87-08/91	ENGINE E 18 NV								
Engine	Information											
All engines	->eng. 14258179, version Bosch						2.7530/10PHT					
All engines	eng. type 14258180 ->, version Bosch						2.7530/27PHT					
All engines	version Bosch							3.7573/27RS				
All engines	ch. J2791968 ->, ch. J5273428 ->, ch. JE215466 ->, ->eng. 14258179, ->eng. 14258179, info WY									9.6091 C10		
All engines	eng. type 14258180 ->, info WE									9.6092 C10		
All engines	->ch. J2791967, ->ch. J5273427, ->ch. JE215465									9.6094 C10		
All engines	eng. type 14275382 ->											4.8689
2.0 GSI	Petrol	85	09/86-08/91	ENGINE 20 NE								
Engine	Information											
All engines	->eng. 14180385, version Bosch						2.7530/10PHT					
All engines	eng. type 14180386 ->, version Bosch						2.7530/27PHT					
All engines	version Ducellier						2.7684PHT	3.7703RS				
All engines	version Bosch							3.7573/27RS				
All engines	ch. J2791968 ->, ch. J5273428 ->, ch. JE215466 ->, ->eng. 14180385, info WY									9.6091 C10		
All engines	eng. type 14180386 ->, info WE									9.6092 C10		
All engines	->ch. J2791967, ->ch. J5273427, ->ch. JE215465									9.6094 C10		
All engines	eng. type 14672353 ->											4.8689
2.0 GSI	Petrol	95	09/86-08/91	ENGINE 20 SEH								
Engine	Information											
All engines	->eng. 14180385, version Bosch						2.7530/10PHT					
All engines	eng. type 14180386 ->, version Bosch						2.7530/27PHT					
All engines	version Ducellier						2.7684PHT	3.7703RS				
All engines	version Bosch							3.7573/27RS				

A10	CONDENSER	A20	CONTACT SET	A40	DISTRIBUTOR CAP	A50	ROTOR	A70	PICK-UP
C10	COIL	C20	IGNITION MODULE	C30	ELECTRONIC IGNITION KIT	E01	IGNITION CABLE SET		

The present application list is a brief version. For the detailed information about the possibility of installation on a specific vehicle, please refer to our web-catalogue http://catalogo.facet.eu/

Vehicle	alim.	kW	Date	Engine	FUNCTIONS ON THE VEHICLE A10	A20	A40	A50	A70	C10 - C30	C20	E01
2.0 GSI	Petrol	95	09/86-08/91	20 SEH								

Engine	Information	A10	A20	A40	A50	A70	C10 - C30		C20	E01
All engines	ch. J2791968 ->, ch. J5273428 ->, ch. JE215466 ->, ->eng. 14180385, info WY						9.6091	C10		
All engines	eng. type 14180386 ->, info WE						9.6092	C10		
All engines	->ch. J2791967, ->ch. J5273427, ->ch. JE215465						9.6094	C10		

2.0 GSI 16V	Petrol	115	12/87-08/91	20 XE

Engine	Information	A10	A20	A40	A50	A70	C10 - C30		C20	E01
All engines	->eng. 14180385, version Bosch			2.7530/21PHT						
All engines	eng. type 14180386 ->, version Bosch			2.7530/27PHT						
All engines	version Bosch				3.7573/21RS					

2.0 GSI 16V Cat	Petrol	110	03/88-08/91	C 20 XE

Engine	Information	A10	A20	A40	A50	A70	C10 - C30		C20	E01
All engines	->eng. 14180385, version Bosch			2.7530/21PHT						
All engines	eng. type 14180386 ->, version Bosch			2.7530/27PHT						
All engines	version Bosch				3.7573/21RS					

2.0 GSI Cat	Petrol	85	09/86-08/91	C 20 NE

Engine	Information	A10	A20	A40	A50	A70	C10 - C30		C20	E01
All engines	->eng. 14180385, version Bosch			2.7530/10PHT						
All engines	eng. type 14180386 ->, version Bosch			2.7530/27PHT						
All engines	version Ducellier			2.7684PHT	3.7703RS					
All engines	version Bosch				3.7573/27RS					
All engines	ch. J2791968 ->, ch. J5273428 ->, ch. JE215466 ->, ->eng. 14180385, info WY						9.6091	C10		
All engines	eng. type 14180386 ->, info WE						9.6092	C10		
All engines	->ch. J2791967, ->ch. J5273427, ->ch. JE215465						9.6094	C10		
All engines	eng. type 14672353 ->									4.8689

2.0 i	Petrol	85	10/86-02/93	20 NE

Engine	Information	A10	A20	A40	A50	A70	C10 - C30		C20	E01
All engines	->eng. 14180385, version Bosch			2.7530/10PHT						
All engines	eng. type 14180386 ->, version Bosch			2.7530/27PHT						
All engines	version Ducellier			2.7684PHT	3.7703RS					
All engines	version Bosch				3.7573/27RS					
All engines	ch. J2791968 ->, ch. J5273428 ->, ch. JE215466 ->, ->eng. 14180385, info WY						9.6091	C10		
All engines	eng. type 14180386 ->, info WE						9.6092	C10		
All engines	->ch. J2791967, ->ch. J5273427, ->ch. JE215465						9.6094	C10		
All engines	eng. type 14672353 ->									4.8689

2.0 i Cat	Petrol	85	10/86-02/93	C 20 NE

Engine	Information	A10	A20	A40	A50	A70	C10 - C30		C20	E01
All engines	->eng. 14180385, version Bosch			2.7530/10PHT						
All engines	eng. type 14180386 ->, version Bosch			2.7530/27PHT						
All engines	version Ducellier			2.7684PHT	3.7703RS					
All engines	version Bosch				3.7573/27RS					
All engines	ch. J2791968 ->, ch. J5273428 ->, ch. JE215466 ->, ->eng. 14180385, info WY						9.6091	C10		
All engines	eng. type 14180386 ->, info WE						9.6092	C10		
All engines	->ch. J2791967, ->ch. J5273427, ->ch. JE215465						9.6094	C10		
All engines	eng. type 14672353 ->									4.8689

MANTA B

1.2 S	Petrol	44	09/75-02/79	12 S

Engine	Information	A10	A20	A40	A50	A70	C10 - C30		C20	E01
All engines					3.7593RS					

1.3 N	Petrol	44	03/79-12/80	13 N

Engine	Information	A10	A20	A40	A50	A70	C10 - C30		C20	E01
All engines	version Bosch		1.2534HDVS	2.7480PHT	3.7512RS					

A10	CONDENSER	A20	CONTACT SET	A40	DISTRIBUTOR CAP	A50	ROTOR	A70	PICK-UP
C10	COIL	C20	IGNITION MODULE	C30	ELECTRONIC IGNITION KIT	E01	IGNITION CABLE SET		

The present application list is a brief version. For the detailed information about the possibility of installation on a specific vehicle, please refer to our web-catalogue http://catalogo.facet.eu/

Vehicle	alim.	kW	Date	Engine	FUNCTIONS ON THE VEHICLE A10	A20	A40	A50	A70	C10 - C30	C20	E01
1.3 S	Petrol	55	08/81-08/86	13 S								

Engine	Information	A10	A20	A40	A50	A70	C10 - C30	C20	E01
All engines	version Bosch			2.7480PHT	3.7555RS				
All engines	version Delco Remy			2.7573PHT	3.7596				

1.6 S	Petrol	55	09/75-12/81	16 S								

Engine	Information	A10	A20	A40	A50	A70	C10 - C30	C20	E01
All engines	version Bosch		1.2534HDVS	2.7480PHT	3.7512RS				

1.9 N	Petrol	55	08/76-12/81	19 N								

Engine	Information	A10	A20	A40	A50	A70	C10 - C30	C20	E01
All engines	version Bosch		1.2534HDVS	2.7480PHT	3.7512RS				
All engines					3.7593RS				

2.0	Petrol	66	08/77-12/80	20 N								

Engine	Information	A10	A20	A40	A50	A70	C10 - C30	C20	E01
All engines	version Bosch		1.2534HDVS	2.7480PHT	3.7512RS				

MERIVA

1.4 ECOTEC	Petrol	74	01/13-03/17	A 14 XER								

Engine	Information	A10	A20	A40	A50	A70	C10 - C30	C20	E01
All engines	x 1, COIL ON RAIL						9.6447 C10		

MERIVA A

1.4 16V Twinport	Petrol	66	07/04-05/10	Z 14 XEP								

Engine	Information	A10	A20	A40	A50	A70	C10 - C30	C20	E01
All engines	x 1, BOSCH, COIL ON PLUG, incl. spark plug connector						9.6300 C10		

1.4 16V Twinport LPG	Petrol/ Liquified Petro-leum Gas (LPG)	66	07/04-05/10	Z 14 XEP								

Engine	Information	A10	A20	A40	A50	A70	C10 - C30	C20	E01
All engines	x 1, BOSCH, COIL ON PLUG, incl. spark plug connector						9.6300 C10		

1.6	Petrol	64	05/03-05/10	Z 16 SE								

Engine	Information	A10	A20	A40	A50	A70	C10 - C30	C20	E01
All engines									4.9904

1.6	Petrol	77	01/06-05/10	Z 16 XEP								

Engine	Information	A10	A20	A40	A50	A70	C10 - C30	C20	E01
All engines	x 1, DELPHI, COIL ON PLUG, incl. spark plug connector						9.6350 C10		

1.6 16V	Petrol	74	05/03-01/06	Z 16 XE								

Engine	Information	A10	A20	A40	A50	A70	C10 - C30	C20	E01
All engines	x 4, COIL ON PLUG, incl. spark plug connector						9.6299 C10		

1.6 Turbo	Petrol	132	09/05-05/10	Z 16 LET								

Engine	Information	A10	A20	A40	A50	A70	C10 - C30	C20	E01
All engines	x 1, DELPHI, COIL ON PLUG, incl. spark plug connector						9.6350 C10		

1.8	Petrol	92	05/03-05/10	Z 18 XE								

Engine	Information	A10	A20	A40	A50	A70	C10 - C30	C20	E01
All engines	x 1, COIL ON PLUG, incl. spark plug connector						9.6408 C10		

MERIVA B

1.4	Petrol	103	06/10-03/17	A 14 NET, B 14 NET								

Engine	Information	A10	A20	A40	A50	A70	C10 - C30	C20	E01
All engines	x 1, COIL ON RAIL						9.6447 C10		

A10	CONDENSER	A20	CONTACT SET	A40	DISTRIBUTOR CAP	A50	ROTOR	A70	PICK-UP
C10	COIL	C20	IGNITION MODULE	C30	ELECTRONIC IGNITION KIT	E01	IGNITION CABLE SET		

The present application list is a brief version. For the detailed information about the possibility of installation on a specific vehicle, please refer to our web-catalogue http://catalogo.facet.eu/

Vehicle	alim.	kW	Date	Engine	FUNCTIONS ON THE VEHICLE A10	A20	A40	A50	A70	C10 - C30	C20	E01
1.4	Petrol	74	06/10-03/17	A 14 XER, B 14 XER								

Engine	Information	A10	A20	A40	A50	A70	C10 - C30		C20	E01
All engines	x 1, COIL ON RAIL						9.6447	C10		

1.4	Petrol	88	06/10-03/17	A 14 NEL, B 14 NEL

Engine	Information	A10	A20	A40	A50	A70	C10 - C30		C20	E01
All engines	x 1, COIL ON RAIL						9.6447	C10		

1.4 LPG	Petrol/ Liquified Petro-leum Gas (LPG)	88	06/11-03/17	A 14 NEL, B 14 NEL

Engine	Information	A10	A20	A40	A50	A70	C10 - C30		C20	E01
All engines	x 1, COIL ON RAIL						9.6447	C10		

MIDI

2.0 i	Petrol	62	09/92-08/94	20PET

Engine	Information	A10	A20	A40	A50	A70	C10 - C30		C20	E01
All engines	version Denso			2.7593	3.7630					
All engines	for emission-controlled vehicles						9.6119	C10		

2.0 i 4x4	Petrol	62	09/92-08/94	20PET

Engine	Information	A10	A20	A40	A50	A70	C10 - C30		C20	E01
All engines	version Denso			2.7593	3.7630					
All engines	for emission-controlled vehicles						9.6119	C10		

MOKKA

1.4	Petrol	103	04/13->	A 14 NET, B 14 NET, D 14 NET

Engine	Information	A10	A20	A40	A50	A70	C10 - C30		C20	E01
All engines	x 1, COIL ON RAIL						9.6447	C10		

1.4 4x4	Petrol	103	06/12->	A 14 NET, B 14 NET, D 14 NET

Engine	Information	A10	A20	A40	A50	A70	C10 - C30		C20	E01
All engines	x 1, COIL ON RAIL						9.6447	C10		

1.4 4x4	Petrol	112	06/16->	B 14 XFT

Engine	Information	A10	A20	A40	A50	A70	C10 - C30		C20	E01
All engines	x 4, COIL ON PLUG						9.6531	C10		

1.4 LPG	Petrol/ Liquified Petro-leum Gas (LPG)	103	04/13->	A 14 NET, B 14 NET, D 14 NET

Engine	Information	A10	A20	A40	A50	A70	C10 - C30		C20	E01
All engines	x 1, COIL ON RAIL						9.6447	C10		

1.6	Petrol	85	06/12->	A 16 XER, B 16 XER, D 16 XER

Engine	Information	A10	A20	A40	A50	A70	C10 - C30		C20	E01
All engines	x 1, COIL RAILS						9.6445	C10		

1.8	Petrol	103	01/13->	A 18 XER

Engine	Information	A10	A20	A40	A50	A70	C10 - C30		C20	E01
All engines	x 1, COIL ON PLUG						9.6445	C10		

1.8 4x4	Petrol	103	01/13->	A 18 XER

Engine	Information	A10	A20	A40	A50	A70	C10 - C30		C20	E01
All engines	x 1, COIL ON PLUG						9.6445	C10		

A10	CONDENSER	A20	CONTACT SET	A40	DISTRIBUTOR CAP	A50	ROTOR	A70	PICK-UP
C10	COIL	C20	IGNITION MODULE	C30	ELECTRONIC IGNITION KIT	E01	IGNITION CABLE SET		

The present application list is a brief version. For the detailed information about the possibility of installation on a specific vehicle, please refer to our web-catalogue http://catalogo.facet.eu/

Vehicle	alim.	kW	Date	Engine	FUNCTIONS ON THE VEHICLE A10	A20	A40	A50	A70	C10 - C30	C20	E01

OMEGA A

1.8 | Petrol | 60 | 09/86-03/94 | ENGINE: S 18 NV

Engine	Information	A10	A20	A40	A50	A70	C10 - C30		C20	E01
All engines	->ch. K1999999, version Bosch			2.7530/10PHT						
All engines	ch. L1000001 ->, version Bosch			2.7530/27PHT						
All engines	version Ducellier			2.7684PHT	3.7703RS					
All engines	version Bosch				3.7573/27RS					
All engines	->eng. 14258179, ch. K1000099 ->						9.6091	C10		
All engines	eng. type 14258180 ->						9.6092	C10		
All engines	->ch. K1000098						9.6094	C10		
All engines	eng. type 14258180 ->, ->ch. L1204907									4.8527
All engines	ch. L1204908 ->									4.8689

1.8 | Petrol | 65 | 09/87-03/94 | ENGINE: E 18 NVR

Engine	Information	A10	A20	A40	A50	A70	C10 - C30		C20	E01
All engines	->ch. K1999999, version Bosch			2.7530/10PHT						
All engines	ch. L1000001 ->, version Bosch			2.7530/27PHT						
All engines	version Ducellier			2.7684PHT	3.7703RS					
All engines	version Bosch				3.7573/27RS					
All engines	->eng. 14258179, ch. K1000099 ->						9.6091	C10		
All engines	eng. type 14258180 ->						9.6092	C10		
All engines	->ch. K1000098						9.6094	C10		
All engines	eng. type 14258180 ->, ->ch. L1204907									4.8527
All engines	ch. L1204908 ->									4.8689

1.8 | Petrol | 85 | 09/86-03/94 | ENGINE: 18 SEH

Engine	Information	A10	A20	A40	A50	A70	C10 - C30		C20	E01
All engines	->ch. K1999999, version Bosch			2.7530/10PHT						
All engines	ch. L1000001 ->, version Bosch			2.7530/27PHT						
All engines	version Ducellier			2.7684PHT	3.7703RS					
All engines	version Bosch				3.7573/27RS					
All engines	eng. type 1019854 ->, ->eng. 14258180						9.6040	C10		
All engines	eng. type 14258180 ->, ->ch. L1204907									4.8527
All engines	ch. L1204908 ->									4.8689

1.8 N | Petrol | 60 | 09/86-08/87 | ENGINE: 18 NV

Engine	Information	A10	A20	A40	A50	A70	C10 - C30		C20	E01
All engines	->ch. K1999999, version Bosch			2.7530/10PHT						
All engines	ch. L1000001 ->, version Bosch			2.7530/27PHT						
All engines	version Ducellier			2.7684PHT	3.7703RS					
All engines	version Bosch				3.7573/27RS					
All engines	->eng. 14258179, ch. K1000099 ->						9.6091	C10		
All engines	eng. type 14258180 ->						9.6092	C10		
All engines	->ch. K1000098						9.6094	C10		
All engines	eng. type 14258180 ->, ->ch. L1204907									4.8527
All engines	ch. L1204908 ->									4.8689

1.8 S | Petrol | 66 | 09/86-03/94 | ENGINE: 18 SV

Engine	Information	A10	A20	A40	A50	A70	C10 - C30		C20	E01
All engines	->ch. K1999999, version Bosch			2.7530/10PHT						
All engines	ch. L1000001 ->, version Bosch			2.7530/27PHT						
All engines	version Ducellier			2.7684PHT	3.7703RS					
All engines	version Bosch				3.7573/27RS					
All engines	eng. type 14258180 ->						9.6040	C10		
All engines	ch. L1019855 ->								9.4036	
All engines	eng. type 14258180 ->, ->ch. L1204907									4.8527
All engines	ch. L1204908 ->									4.8689

2.0 | Petrol | 85 | 09/87-04/94 | ENGINE: C 20 NE

Engine	Information	A10	A20	A40	A50	A70	C10 - C30		C20	E01
All engines	->ch. K1999999, version Bosch			2.7530/10PHT						
All engines	ch. L1000001 ->, version Bosch			2.7530/27PHT						

A10	CONDENSER	A20	CONTACT SET	A40	DISTRIBUTOR CAP	A50	ROTOR	A70	PICK-UP
C10	COIL	C20	IGNITION MODULE	C30	ELECTRONIC IGNITION KIT	E01	IGNITION CABLE SET		

The present application list is a brief version. For the detailed information about the possibility of installation on a specific vehicle, please refer to our web-catalogue http://catalogo.facet.eu/

Vehicle	alim.	kW	Date	Engine	FUNCTIONS ON THE VEHICLE: A10	A20	A40	A50	A70	C10 - C30	C20	E01
2.0	Petrol	85	09/87-04/94	ENGINE: C 20 NE								

Engine	Information	A10	A20	A40	A50	A70	C10 - C30		C20	E01
All engines	version Ducellier			2.7684PHT	3.7703RS					
All engines	version Bosch				3.7573/27RS					
All engines	->eng. 14180385, ch. K1000099 ->						9.6091	C10		
All engines	eng. type 14180386 ->						9.6092	C10		
All engines	->ch. K1000098						9.6094	C10		
All engines	->eng. 14672352, eng. type 14180386 ->									4.8527
All engines	eng. type 14672353 ->									4.8689

2.0	Petrol	90	09/86-03/94	ENGINE: 20 SE

Engine	Information	A10	A20	A40	A50	A70	C10 - C30		C20	E01
All engines	->ch. K1999999, version Bosch			2.7530/10PHT						
All engines	ch. L1000001 ->, version Bosch			2.7530/27PHT						
All engines	version Ducellier			2.7684PHT	3.7703RS					
All engines	version Bosch				3.7573/27RS					
All engines	->eng. 14180385, ch. K1000099 ->						9.6091	C10		
All engines	eng. type 14180386 ->						9.6092	C10		
All engines	->ch. K1000098						9.6094	C10		
All engines	->eng. 14312950, eng. type 14180386 ->									4.8527
All engines	eng. type 14312951 ->									4.8689

2.0 i	Petrol	85	09/86-04/94	ENGINE: C 20 NE

Engine	Information	A10	A20	A40	A50	A70	C10 - C30		C20	E01
All engines	->ch. K1999999, version Bosch			2.7530/10PHT						
All engines	ch. L1000001 ->, version Bosch			2.7530/27PHT						
All engines	version Ducellier			2.7684PHT	3.7703RS					
All engines	version Bosch				3.7573/27RS					
All engines	->eng. 14180385, ch. K1000099 ->						9.6091	C10		
All engines	eng. type 14180386 ->						9.6092	C10		
All engines	->ch. K1000098						9.6094	C10		
All engines	->eng. 14672352, eng. type 14180386 ->									4.8527
All engines	eng. type 14672353 ->									4.8689

2.4 i	Petrol	92	09/88-03/94	ENGINE: C 24 NE

Engine	Information	A10	A20	A40	A50	A70	C10 - C30		C20	E01
All engines	oe Bosch 1 235 522 409			2.7480PHT						
All engines	oe Bosch 1 235 522 437			2.7530/26PHT						
All engines	version Bosch				3.7573/21RS					
All engines	->ch. K1999999						9.6091	C10		
All engines	ch. L1000001 ->						9.6092	C10		

2.6 i	Petrol	110	09/90-03/94	ENGINE: C 26 NE

Engine	Information	A10	A20	A40	A50	A70	C10 - C30		C20	E01
All engines	version Bosch			2.7530/28PHT	3.7556RS					
All engines							9.6092	C10		

3.0	Petrol	115	03/87-03/94	ENGINE: C 30 LE

Engine	Information	A10	A20	A40	A50	A70	C10 - C30		C20	E01
All engines	->ch. K1999999, version Bosch			2.7481PHT						
All engines	ch. L1000001 ->, version Bosch			2.7530/28PHT						
All engines	version Bosch				3.7556RS					
All engines	->ch. K1999999, ch. K1000099 ->						9.6091	C10		
All engines	ch. L1000001 ->						9.6092	C10		
All engines	->ch. K1000098						9.6094	C10		

3.0	Petrol	130	03/87-03/94	ENGINE: 30 NE, C 30 NE

Engine	Information	A10	A20	A40	A50	A70	C10 - C30		C20	E01
All engines	->ch. K1999999, version Bosch			2.7481PHT						
All engines	ch. L1000001 ->, version Bosch			2.7530/28PHT						
All engines	version Bosch				3.7556RS					
Eng. C 30 NE	->ch. K1999999, ch. K1000099 ->						9.6091	C10		

A10	CONDENSER	A20	CONTACT SET	A40	DISTRIBUTOR CAP	A50	ROTOR	A70	PICK-UP
C10	COIL	C20	IGNITION MODULE	C30	ELECTRONIC IGNITION KIT	E01	IGNITION CABLE SET		

The present application list is a brief version. For the detailed information about the possibility of installation on a specific vehicle, please refer to our web-catalogue http://catalogo.facet.eu/

Vehicle	alim.	kW	Date	Engine	FUNCTIONS ON THE VEHICLE A10	A20	A40	A50	A70	C10 - C30	C20	E01
3.0	Petrol	130	03/87-03/94	ENGINE 30 NE, C 30 NE								
Eng. C 30 NE	ch. L1000001 ->									9.6092 C10		
Eng. C 30 NE	->ch. K1000098									9.6094 C10		
Eng. 30 NE											9.4034	
3.0 24V	Petrol	150	09/89-03/94	ENGINE C 30 SE								
All engines	version Bosch						2.7530/28PHT	3.7556RS				
All engines										9.6092 C10		
3.0 24V Omega 3000	Petrol	150	09/88-04/94	ENGINE C 30 SE								
All engines	version Bosch						2.7530/28PHT	3.7556RS				
All engines										9.6092 C10		
3.0 Cat	Petrol	130	03/87-03/94	ENGINE C 30 NE								
All engines	->ch. K1999999, version Bosch						2.7481PHT					
All engines	ch. L1000001 ->, version Bosch						2.7530/28PHT					
All engines	version Bosch							3.7556RS				
All engines	->ch. K1999999, ch. K1000099 ->									9.6091 C10		
All engines	ch. L1000001 ->									9.6092 C10		
All engines	->ch. K1000098									9.6094 C10		
OMEGA B												
2.0	Petrol	85	03/94-12/00	ENGINE 20 SE, X 20 SE								
Eng. 20 SE	->ch. K1999999, version Bosch						2.7530/10PHT					
Eng. 20 SE	ch. L1000001 ->, version Bosch						2.7530/27PHT					
Eng. 20 SE	version Ducellier						2.7684PHT	3.7703RS				
Eng. 20 SE	version Bosch							3.7573/27RS				
Eng. 20 SE	->eng. 14180385, ch. K1000099 ->									9.6091 C10		
Eng. 20 SE	eng. type 14180386 ->									9.6092 C10		
Eng. 20 SE	->ch. K1000098									9.6094 C10		
Eng. X 20 SE										9.6173 C10		
Eng. 20 SE	->eng. 14312950, eng. type 14180386 ->											4.8527
Eng. 20 SE	eng. type 14312951 ->											4.8689
2.0 16V	Petrol	100	03/94-09/99	ENGINE X 20 XEV								
All engines										9.6172 C10		4.9562
REKORD D												
1.7	Petrol	44	03/75-08/77	ENGINE 17 N								
All engines								3.7593RS				
REKORD E												
1.7	Petrol	44	09/77-10/82	ENGINE 17 N								
All engines								3.7567RS				
1.9	Petrol	55	09/77-10/82	ENGINE 19 N								
All engines								3.7567RS				
2.0	Petrol	66	09/77-10/82	ENGINE 20 N								
All engines								3.7567RS				

A10	CONDENSER	A20	CONTACT SET	A40	DISTRIBUTOR CAP	A50	ROTOR	A70	PICK-UP
C10	COIL	C20	IGNITION MODULE	C30	ELECTRONIC IGNITION KIT	E01	IGNITION CABLE SET		

The present application list is a brief version. For the detailed information about the possibility of installation on a specific vehicle, please refer to our web-catalogue http://catalogo.facet.eu/

Vehicle	alim.	kW	Date	Engine	FUNCTIONS ON THE VEHICLE							
					A10	A20	A40	A50	A70	C10 - C30	C20	E01

SENATOR B

				ENGINE
2.5 i	Petrol	103	09/90-09/93	25 NE

Engine	Information	A10	A20	A40	A50	A70	C10 - C30		C20	E01
All engines	->eng. 055888, version Bosch			2.7481PHT						
All engines	eng. type 055889 ->, version Bosch			2.7530/28PHT						
All engines	version Bosch				3.7556RS					

				ENGINE
3.0	Petrol	115	09/87-09/93	C 30 LE

Engine	Information	A10	A20	A40	A50	A70	C10 - C30		C20	E01
All engines	->eng. 018097, version Bosch			2.7481PHT						
All engines	eng. type 018098 ->, version Bosch			2.7530/28PHT						
All engines	version Bosch				3.7556RS					
All engines	ch. K1000099 ->, ->ch. L1000000						9.6091	C10		
All engines	ch. L1000001 ->						9.6092	C10		
All engines	->ch. K1000098						9.6094	C10		

				ENGINE
3.0	Petrol	130	01/88-09/90	30 NE

Engine	Information	A10	A20	A40	A50	A70	C10 - C30		C20	E01
All engines	->eng. 115025, version Bosch			2.7481PHT						
All engines	eng. type 115026 ->, version Bosch			2.7530/28PHT						
All engines	version Bosch				3.7556RS					

				ENGINE
3.0 24V	Petrol	150	09/89-09/93	C 30 SE

Engine	Information	A10	A20	A40	A50	A70	C10 - C30		C20	E01
All engines	version Bosch			2.7530/28PHT	3.7556RS					
All engines							9.6092	C10		

				ENGINE
3.0 i Cat	Petrol	130	01/88-09/93	C 30 NE

Engine	Information	A10	A20	A40	A50	A70	C10 - C30		C20	E01
All engines	->eng. 115025, version Bosch			2.7481PHT						
All engines	eng. type 115026 ->, version Bosch			2.7530/28PHT						
All engines	version Bosch				3.7556RS					
All engines	ch. K1000099 ->, ->ch. L1000000						9.6091	C10		
All engines	ch. L1000001 ->						9.6092	C10		
All engines	->ch. K1000098						9.6094	C10		

SIGNUM

				ENGINE
1.8	Petrol	103	09/05-12/08	Z 18 XER

Engine	Information	A10	A20	A40	A50	A70	C10 - C30		C20	E01
All engines	x 1, DELPHI, COIL ON PLUG, incl. spark plug connector						9.6350	C10		

				ENGINE
1.8	Petrol	90	05/03-07/05	Z 18 XE

Engine	Information	A10	A20	A40	A50	A70	C10 - C30		C20	E01
All engines	x 1, COIL ON PLUG, incl. spark plug connector						9.6408	C10		

SINTRA

				ENGINE
2.2 i 16V	Petrol	104	11/96-04/99	X 22 XE

Engine	Information	A10	A20	A40	A50	A70	C10 - C30		C20	E01
All engines	x 1, D.I.S.						9.6289	C10		
All engines										4.9562

SPEEDSTER

				ENGINE
2.0	Petrol	162	10/03-08/06	Z 20 LET

Engine	Information	A10	A20	A40	A50	A70	C10 - C30		C20	E01
All engines							9.6407	C10		

				ENGINE
2.0 Turbo	Petrol	147	08/02-08/06	Z 20 LET

Engine	Information	A10	A20	A40	A50	A70	C10 - C30		C20	E01
All engines	x 1, COIL ON PLUG						9.6407	C10		

A10	CONDENSER	A20	CONTACT SET	A40	DISTRIBUTOR CAP	A50	ROTOR	A70	PICK-UP
C10	COIL	C20	IGNITION MODULE	C30	ELECTRONIC IGNITION KIT	E01	IGNITION CABLE SET		

The present application list is a brief version. For the detailed information about the possibility of installation on a specific vehicle, please refer to our web-catalogue http://catalogo.facet.eu/

Vehicle	alim.	kW	Date	Engine	FUNCTIONS ON THE VEHICLE: A10	A20	A40	A50	A70	C10 - C30	C20	E01

TIGRA A

				ENGINE
1.4 16V	Petrol	63	08/97-12/00	X 14 XE

Engine	Information	A10	A20	A40	A50	A70	C10 - C30	C20	E01
All engines	->ch. 20C17331								4.8688
All engines	ch. 20C17332 ->								4.9559

				ENGINE
1.4 16V	Petrol	66	07/94-12/00	X 14 XE

Engine	Information	A10	A20	A40	A50	A70	C10 - C30	C20	E01
All engines	->ch. 20C17331								4.8688
All engines	ch. 20C17332 ->								4.9559

				ENGINE
1.6 16V	Petrol	74	08/97-08/98	C 16 SEL

Engine	Information	A10	A20	A40	A50	A70	C10 - C30	C20	E01
All engines	->ch. 20C17331								4.8688
All engines	ch. 20C17332 ->								4.9559

				ENGINE
1.6 16V	Petrol	78	07/94-08/98	X 16 XE

Engine	Information	A10	A20	A40	A50	A70	C10 - C30	C20	E01
All engines	->ch. 20C17331								4.8688
All engines	ch. 20C17332 ->								4.9559

TIGRA B

				ENGINE
1.4	Petrol	66	06/04-12/10	Z 14 XEP

Engine	Information	A10	A20	A40	A50	A70	C10 - C30	C20	E01
All engines	x 1, BOSCH, COIL ON PLUG, incl. spark plug connector						9.6300 C10		

				ENGINE
1.8	Petrol	92	06/04-12/10	Z 18 XE

Engine	Information	A10	A20	A40	A50	A70	C10 - C30	C20	E01
All engines	x 1, COIL ON PLUG, incl. spark plug connector						9.6408 C10		

VECTRA

				ENGINE
2.0	Petrol	85	10/95-04/02	C 20 SEL

Engine	Information	A10	A20	A40	A50	A70	C10 - C30	C20	E01
All engines	x 1, D.I.S.						9.6172 C10		

VECTRA A

				ENGINE
1.4 S	Petrol	55	04/88-06/92	14 NV

Engine	Information	A10	A20	A40	A50	A70	C10 - C30	C20	E01
All engines	->ch. K1999999, ->ch. K5999999, ->ch. KV999999, version Bosch			2.7480PHT					
All engines	ch. L1000001 ->, ch. L5000001 ->, ch. LV100001 ->, version Bosch			2.7530/26PHT					
All engines	version Bosch				3.7556RS				
All engines								9.4005	
All engines	eng. type 02J22350 ->								4.8956
All engines	eng. type 19585416 ->								4.9237

				ENGINE
1.6	Petrol	51	08/92-07/93	C 16 LZ2

Engine	Information	A10	A20	A40	A50	A70	C10 - C30	C20	E01
All engines	version Ducellier			2.7684PHT	3.7703RS				
All engines							9.6040 C10	9.4036	

				ENGINE
1.6	Petrol	60	09/88-05/93	16 SV

Engine	Information	A10	A20	A40	A50	A70	C10 - C30	C20	E01
All engines	->ch. K1999999, ->ch. K5999999, ->ch. KV999999, version Bosch			2.7530/19PHT					
All engines	ch. L1000001 ->, ch. L5000001 ->, ch. LV100001 ->, version Bosch			2.7530/26PHT					
All engines	->ch. K1999999, ->ch. K5999999, ->ch. KV999999, version Lucas			2.8099PHT					
All engines	ch. L1000001 ->, ch. L5000001 ->, ch. LV100001 ->, version Lucas			2.8100PHT					
All engines	version Bosch				3.7573/21RS				
All engines	version Lucas				3.8128RS				
All engines	ch. L1000001 ->, ch. L5000001 ->, ch. LV100001 ->						9.6040 C10		

A10	CONDENSER	A20	CONTACT SET	A40	DISTRIBUTOR CAP	A50	ROTOR	A70	PICK-UP
C10	COIL	C20	IGNITION MODULE	C30	ELECTRONIC IGNITION KIT	E01	IGNITION CABLE SET		

The present application list is a brief version. For the detailed information about the possibility of installation on a specific vehicle, please refer to our web-catalogue http://catalogo.facet.eu/

Vehicle	alim.	kW	Date	Engine	FUNCTIONS ON THE VEHICLE							
					A10	A20	A40	A50	A70	C10 - C30	C20	E01
1.6	Petrol	60	09/88-05/93	ENGINE 16 SV								

Engine	Information	A10	A20	A40	A50	A70	C10 - C30	C20	E01
All engines								9.4036	
All engines	->eng. 02E85672								4.8514
All engines	eng. type 02N39786 ->								4.9237

1.6 i	Petrol	52	09/93-11/95	ENGINE X 16 SZ

Engine	Information	A10	A20	A40	A50	A70	C10 - C30	C20	E01
All engines	version Delco Remy			2.7573PHT	3.7600	8.3410			
All engines								9.4025	
All engines	->ch. P1999999, ->ch. P5999999, ->ch. P7999999								4.8634
All engines	ch. R1000001 ->, ch. R5000001 ->, ch. R7500001 ->								4.9531

1.6 i	Petrol	55	09/88-11/95	ENGINE C 16 NZ, C 16 NZ2, E 16 NZ

Engine	Information	A10	A20	A40	A50	A70	C10 - C30	C20	E01
Eng. C 16 NZ, E 16 NZ	version Delco Remy			2.7573PHT	3.7600	8.3410			
Eng. C 16 NZ2	version Ducellier			2.7684PHT	3.7703RS				
Eng. C 16 NZ2							9.6040 C10	9.4036	
Eng. C 16 NZ, E 16 NZ							9.6241 C10	9.4025	
Eng. C 16 NZ, E 16 NZ	->eng. 02V65825								4.8513
Eng. C 16 NZ, E 16 NZ	ch. R1000001 ->, ch. R5000001 ->, ch. R7500001 ->								4.9237

1.6 i Cat	Petrol	55	09/88-11/95	ENGINE C 16 NZ, C 16 NZ2

Engine	Information	A10	A20	A40	A50	A70	C10 - C30	C20	E01
Eng. C 16 NZ	version Delco Remy			2.7573PHT	3.7600	8.3410			
Eng. C 16 NZ2	version Ducellier			2.7684PHT	3.7703RS				
Eng. C 16 NZ2							9.6040 C10	9.4036	
Eng. C 16 NZ							9.6241 C10	9.4025	
Eng. C 16 NZ	->eng. 02V65825								4.8513
Eng. C 16 NZ	ch. R1000001 ->, ch. R5000001 ->, ch. R7500001 ->								4.9237

1.6 S	Petrol	60	09/88-05/93	ENGINE 16 SV

Engine	Information	A10	A20	A40	A50	A70	C10 - C30	C20	E01
All engines	->ch. K1999999, ->ch. K5999999, ->ch. KV999999, version Bosch			2.7530/19PHT					
All engines	ch. L1000001 ->, ch. L5000001 ->, ch. LV100001 ->, version Bosch			2.7530/26PHT					
All engines	->ch. K1999999, ->ch. K5999999, ->ch. KV999999, version Lucas			2.8099PHT					
All engines	ch. L1000001 ->, ch. L5000001 ->, ch. LV100001 ->, version Lucas			2.8100PHT					
All engines	version Bosch				3.7573/21RS				
All engines	version Lucas				3.8128RS				
All engines	ch. L1000001 ->, ch. L5000001 ->, ch. LV100001 ->						9.6040 C10		
All engines								9.4036	
All engines	->eng. 02E85672								4.8514
All engines	eng. type 02N39786 ->								4.9237

1.8 i	Petrol	66	09/88-10/90	ENGINE 18 SV

Engine	Information	A10	A20	A40	A50	A70	C10 - C30	C20	E01
All engines	->ch. K1999999, ->ch. K5999999, ->ch. KV999999, version Bosch			2.7530/10PHT					
All engines	ch. L1000001 ->, ch. L5000001 ->, ch. LV100001 ->, version Bosch			2.7530/27PHT					
All engines	version Ducellier			2.7684PHT	3.7703RS				
All engines	version Bosch				3.7573/27RS				
All engines							9.6040 C10	9.4036	
All engines	->eng. 14279654, eng. type 14275382 ->								4.8689

1.8 i Cat	Petrol	66	03/90-11/95	ENGINE C 18 NZ

Engine	Information	A10	A20	A40	A50	A70	C10 - C30	C20	E01
All engines	version Bosch			2.7530/27PHT	3.7573/27RS				
All engines	version Ducellier			2.7684PHT	3.7703RS				
All engines							9.6040 C10	9.4036	
All engines	->eng. 14432540, eng. type 14349311 ->								4.8689

A10	CONDENSER	A20	CONTACT SET	A40	DISTRIBUTOR CAP	A50	ROTOR	A70	PICK-UP
C10	COIL	C20	IGNITION MODULE	C30	ELECTRONIC IGNITION KIT	E01	IGNITION CABLE SET		

The present application list is a brief version. For the detailed information about the possibility of installation on a specific vehicle, please refer to our web-catalogue http://catalogo.facet.eu/

Vehicle	alim.	kW	Date	Engine	FUNCTIONS ON THE VEHICLE A10	A20	A40	A50	A70	C10 - C30	C20	E01
1.8 S	Petrol	65	09/88-07/89	ENGINE E 18 NVR								
All engines	->ch. K1999999, ->ch. K5999999, ->ch. KV999999, version Bosch			2.7530/10PHT							
All engines	ch. L1000001 ->, ch. L5000001 ->, ch. LV100001 ->, version Bosch			2.7530/27PHT							
All engines	version Ducellier			2.7684PHT	3.7703RS						
All engines	version Bosch				3.7573/27RS						
All engines	->eng. 14258179, info WY						9.6091	C10			
All engines	eng. type 14258180 ->, info WE						9.6092	C10			
All engines	->eng. 14279654, eng. type 14275382 ->										4.8689
1.8 S	Petrol	66	09/89-10/90	ENGINE 18 SV								
All engines	->ch. K1999999, ->ch. K5999999, ->ch. KV999999, version Bosch			2.7530/10PHT							
All engines	ch. L1000001 ->, ch. L5000001 ->, ch. LV100001 ->, version Bosch			2.7530/27PHT							
All engines	version Ducellier			2.7684PHT	3.7703RS						
All engines	version Bosch				3.7573/27RS						
All engines							9.6040	C10	9.4036		
All engines	->eng. 14279654, eng. type 14275382 ->										4.8689
1.8 S 4x4	Petrol	65	01/89-07/89	ENGINE E 18 NVR								
All engines	->ch. K1999999, ->ch. K5999999, ->ch. KV999999, version Bosch			2.7530/10PHT							
All engines	ch. L1000001 ->, ch. L5000001 ->, ch. LV100001 ->, version Bosch			2.7530/27PHT							
All engines	version Ducellier			2.7684PHT	3.7703RS						
All engines	version Bosch				3.7573/27RS						
All engines	->eng. 14258179, info WY						9.6091	C10			
All engines	eng. type 14258180 ->, info WE						9.6092	C10			
All engines	->eng. 14279654, eng. type 14275382 ->										4.8689
2.0 i	Petrol	85	09/88-10/90	ENGINE 20 NE								
All engines	->ch. K1999999, ->ch. K5999999, ->ch. KV999999, version Bosch			2.7530/10PHT							
All engines	ch. L1000001 ->, ch. L5000001 ->, ch. LV100001 ->, version Bosch			2.7530/27PHT							
All engines	version Ducellier			2.7684PHT	3.7703RS						
All engines	version Bosch				3.7573/27RS						
All engines	->eng. 14180385, info WY						9.6091	C10			
All engines	eng. type 14180386 ->, info WE						9.6092	C10			
All engines	->eng. 14841581, eng. type 14672353 ->										4.8689
2.0 i	Petrol	95	09/88-09/92	ENGINE 20 SEH								
All engines	->ch. K1999999, ->ch. K5999999, ->ch. KV999999, version Bosch			2.7530/10PHT							
All engines	ch. L1000001 ->, ch. L5000001 ->, ch. LV100001 ->, version Bosch			2.7530/27PHT							
All engines	version Ducellier			2.7684PHT	3.7703RS						
All engines	version Bosch				3.7573/27RS						
All engines	->eng. 14180385, info WY						9.6091	C10			
All engines	eng. type 14180386 ->, info WE						9.6092	C10			
All engines	eng. type 14672353 ->										4.8689
2.0 i 16V	Petrol	100	08/92-08/95	ENGINE X 20 XEV								
All engines							9.6172	C10			4.9562
2.0 i 16V	Petrol	110	02/89-10/90	ENGINE 20 XEJ								
All engines	->eng. 14180385, version Bosch			2.7530/21PHT							
All engines	eng. type 14180386 ->, version Bosch			2.7530/27PHT							
All engines	version Bosch				3.7573/21RS						

A10	CONDENSER	A20	CONTACT SET	A40	DISTRIBUTOR CAP	A50	ROTOR	A70	PICK-UP
C10	COIL	C20	IGNITION MODULE	C30	ELECTRONIC IGNITION KIT	E01	IGNITION CABLE SET		

The present application list is a brief version. For the detailed information about the possibility of installation on a specific vehicle, please refer to our web-catalogue http://catalogo.facet.eu/

Vehicle	alim.	kW	Date	Engine	FUNCTIONS ON THE VEHICLE: A10	A20	A40	A50	A70	C10 - C30	C20	E01
2.0 i 16V	Petrol	110	02/89-10/90	20 XEJ								

Engine	Information	A10	A20	A40	A50	A70	C10 - C30	C20	E01
All engines	ch. P1000001 ->, ch. P5000001 ->, ch. P7500001 ->								4.8688

2.0 i 16V 4x4	Petrol	100	06/94-11/95	X 20 XEV

Engine	Information	A10	A20	A40	A50	A70	C10 - C30	C20	E01
All engines							9.6172 C10		4.9562

2.0 i 16V 4x4	Petrol	110	08/89-08/95	C 20 XE

Engine	Information	A10	A20	A40	A50	A70	C10 - C30	C20	E01
All engines	->eng. 14180385, version Bosch			2.7530/21PHT					
All engines	eng. type 14180386 ->, version Bosch			2.7530/27PHT					
All engines	version Bosch				3.7573/21RS				
All engines	ch. P1000001 ->, ch. P5000001 ->, ch. P7500001 ->								4.8688

2.0 i 16V Cat	Petrol	110	02/90-11/95	C 20 XE

Engine	Information	A10	A20	A40	A50	A70	C10 - C30	C20	E01
All engines	->eng. 14180385, version Bosch			2.7530/21PHT					
All engines	eng. type 14180386 ->, version Bosch			2.7530/27PHT					
All engines	version Bosch				3.7573/21RS				
All engines	ch. P1000001 ->, ch. P5000001 ->, ch. P7500001 ->								4.8688

2.0 i 4x4	Petrol	85	01/89-10/90	20 NE

Engine	Information	A10	A20	A40	A50	A70	C10 - C30	C20	E01
All engines	->ch. K1999999, ->ch. K5999999, ->ch. KV999999, version Bosch			2.7530/10PHT					
All engines	ch. L1000001 ->, ch. L5000001 ->, ch. LV100001 ->, version Bosch			2.7530/27PHT					
All engines	version Ducellier			2.7684PHT	3.7703RS				
All engines	version Bosch				3.7573/27RS				
All engines	->eng. 14180385, info WY						9.6091 C10		
All engines	eng. type 14180386 ->, info WE						9.6092 C10		
All engines	->eng. 14841581, eng. type 14672353 ->								4.8689

2.0 i 4x4	Petrol	95	08/89-07/92	20 SEH

Engine	Information	A10	A20	A40	A50	A70	C10 - C30	C20	E01
All engines	->ch. K1999999, ->ch. K5999999, ->ch. KV999999, version Bosch			2.7530/10PHT					
All engines	ch. L1000001 ->, ch. L5000001 ->, ch. LV100001 ->, version Bosch			2.7530/27PHT					
All engines	version Ducellier			2.7684PHT	3.7703RS				
All engines	version Bosch				3.7573/27RS				
All engines	->eng. 14180385, info WY						9.6091 C10		
All engines	eng. type 14180386 ->, info WE						9.6092 C10		
All engines	eng. type 14672353 ->								4.8689

2.0 i Cat	Petrol	85	09/88-11/95	C 20 NE

Engine	Information	A10	A20	A40	A50	A70	C10 - C30	C20	E01
All engines	->ch. K1999999, ->ch. K5999999, ->ch. KV999999, version Bosch			2.7530/10PHT					
All engines	ch. L1000001 ->, ch. L5000001 ->, ch. LV100001 ->, version Bosch			2.7530/27PHT					
All engines	version Ducellier			2.7684PHT	3.7703RS				
All engines	version Bosch				3.7573/27RS				
All engines	->eng. 14180385, info WY						9.6091 C10		
All engines	eng. type 14180386 ->, info WE						9.6092 C10		
All engines	->eng. 14841581, eng. type 14672353 ->								4.8689

2.0 i Cat 4x4	Petrol	85	01/89-11/95	C 20 NE

Engine	Information	A10	A20	A40	A50	A70	C10 - C30	C20	E01
All engines	->ch. K1999999, ->ch. K5999999, ->ch. KV999999, version Bosch			2.7530/10PHT					
All engines	ch. L1000001 ->, ch. L5000001 ->, ch. LV100001 ->, version Bosch			2.7530/27PHT					
All engines	version Ducellier			2.7684PHT	3.7703RS				
All engines	version Bosch				3.7573/27RS				

A10	CONDENSER	A20	CONTACT SET	A40	DISTRIBUTOR CAP	A50	ROTOR	A70	PICK-UP
C10	COIL	C20	IGNITION MODULE	C30	ELECTRONIC IGNITION KIT	E01	IGNITION CABLE SET		

The present application list is a brief version. For the detailed information about the possibility of installation on a specific vehicle, please refer to our web-catalogue http://catalogo.facet.eu/

Vehicle	alim.	kW	Date	Engine	FUNCTIONS ON THE VEHICLE A10	A20	A40	A50	A70	C10 - C30	C20	E01
2.0 i Cat 4x4	Petrol	85	01/89-11/95	ENGINE **C 20 NE**								
All engines				->eng. 14180385, info WY						9.6091 C10		
All engines				eng. type 14180386 ->, info WE						9.6092 C10		
All engines				->eng. 14841581, eng. type 14672353 ->								4.8689
2.0 i GT	Petrol	95	09/88-11/95	ENGINE **20 SEH**								
All engines				->ch. K1999999, ->ch. K5999999, ->ch. KV999999, version Bosch			2.7530/10PHT					
All engines				ch. L1000001 ->, ch. L5000001 ->, ch. LV100001 ->, version Bosch			2.7530/27PHT					
All engines				version Ducellier			2.7684PHT	3.7703RS				
All engines				version Bosch				3.7573/27RS				
All engines				->eng. 14180385, info WY						9.6091 C10		
All engines				eng. type 14180386 ->, info WE						9.6092 C10		
All engines				eng. type 14672353 ->								4.8689
2.0 i Turbo 4x4	Petrol	150	06/94-11/95	ENGINE **C 20 LET**								
All engines				version Bosch			2.7530/27PHT	3.7573/21RS				
2000 16V 4x4	Petrol	110	01/89-10/90	ENGINE **20 XEJ**								
All engines				->eng. 14180385, version Bosch			2.7530/21PHT					
All engines				eng. type 14180386 ->, version Bosch			2.7530/27PHT					
All engines				version Bosch				3.7573/21RS				
All engines				ch. P1000001 ->, ch. P5000001 ->, ch. P7500001 ->								4.8688
2000/GT 16V	Petrol	110	01/89-06/94	ENGINE **20 XEJ**								
All engines				->eng. 14180385, version Bosch			2.7530/21PHT					
All engines				eng. type 14180386 ->, version Bosch			2.7530/27PHT					
All engines				version Bosch				3.7573/21RS				
All engines				ch. P1000001 ->, ch. P5000001 ->, ch. P7500001 ->								4.8688
2000/GT 16V Cat	Petrol	110	02/90-11/95	ENGINE **C 20 XE**								
All engines				->eng. 14180385, version Bosch			2.7530/21PHT					
All engines				eng. type 14180386 ->, version Bosch			2.7530/27PHT					
All engines				version Bosch				3.7573/21RS				
All engines				ch. P1000001 ->, ch. P5000001 ->, ch. P7500001 ->								4.8688
2000/GT 16V Cat 4x4	Petrol	110	02/90-11/95	ENGINE **C 20 XE**								
All engines				->eng. 14180385, version Bosch			2.7530/21PHT					
All engines				eng. type 14180386 ->, version Bosch			2.7530/27PHT					
All engines				version Bosch				3.7573/21RS				
All engines				ch. P1000001 ->, ch. P5000001 ->, ch. P7500001 ->								4.8688
VECTRA B												
1.6 i	Petrol	55	10/95-07/03	ENGINE **16 LZ2, X 16 SZR**								
Eng. 16 LZ2				version Ducellier			2.7684PHT	3.7703RS				
Eng. 16 LZ2				x 1, SAGEM, DISTRIBUTOR, connector type, saw teeth						9.6040 C10		
Eng. 16 LZ2											9.4036	
Eng. X 16 SZR				->eng. 02HP7704								4.9531
Eng. X 16 SZR				eng. type 02HP7705 ->								4.9904

A10	CONDENSER	**A20**	CONTACT SET	**A40**	DISTRIBUTOR CAP	**A50**	ROTOR	**A70**	PICK-UP
C10	COIL	**C20**	IGNITION MODULE	**C30**	ELECTRONIC IGNITION KIT	**E01**	IGNITION CABLE SET		

The present application list is a brief version. For the detailed information about the possibility of installation on a specific vehicle, please refer to our web-catalogue http://catalogo.facet.eu/

Vehicle	alim.	kW	Date	Engine	FUNCTIONS ON THE VEHICLE: A10	A20	A40	A50	A70	C10 - C30	C20	E01
1.6 i 16V	Petrol	74	10/95-07/02	**X 16 XEL, Y 16 XE, Z 16 XE**								

Engine	Information	A10	A20	A40	A50	A70	C10 - C30		C20	E01
All engines	ch. W1285447 ->, x 4, ch. W5276826 ->, COIL ON PLUG, ch. W7154259 ->, incl. spark plug connector, ch. WL000002 ->, ch. WP000002 ->, ch. WS000002 ->, x 4, COIL ON PLUG, x 4, COIL ON PLUG, incl. spark plug connector, incl. spark plug connector						9.6299	C10		
Eng. X 16 XEL	->ch. W1285449, ->ch. W5276825, ->ch. W7154258									4.8688

1.8 FlexFuel	Petrol/ Liquified Petro-leum Gas (LPG)	85	01/99-09/00	X 18 XE

Engine	Information	A10	A20	A40	A50	A70	C10 - C30		C20	E01
All engines	x 1, D.I.S.						9.6172	C10		

1.8 i 16V	Petrol	85	10/95-09/00	X 18 XE, X 18 XE1, Z 18 XEL

Engine	Information	A10	A20	A40	A50	A70	C10 - C30		C20	E01
Eng. X 18 XE	x 1, D.I.S.						9.6172	C10		
Eng. X 18 XE1, Z 18 XEL	x 1, COIL ON PLUG, incl. spark plug connector						9.6408	C10		
Eng. X 18 XE	no specific info conc. application available									4.9506, 4.9562

1.8 i 16V	Petrol	92	09/00-07/03	Z 18 XE

Engine	Information	A10	A20	A40	A50	A70	C10 - C30		C20	E01
All engines	x 1, COIL ON PLUG, incl. spark plug connector						9.6408	C10		

2.0 i	Petrol	82	10/95-04/02	20 NEJ

Engine	Information	A10	A20	A40	A50	A70	C10 - C30		C20	E01
All engines	x 1, BOSCH, D.I.S., connector type, saw teeth						9.6173	C10		

2.0 i 16V	Petrol	100	09/95-06/00	C 20 SEL, X 20 XEV

Engine	Information	A10	A20	A40	A50	A70	C10 - C30		C20	E01
All engines	x 1, D.I.S.						9.6172	C10		
All engines	no specific info conc. application available									4.9506, 4.9562

2.0 i 16V	Petrol	85	07/00-07/03	C 20 SEL

Engine	Information	A10	A20	A40	A50	A70	C10 - C30		C20	E01
All engines	x 1, D.I.S.						9.6172	C10		

2.2 i 16V	Petrol	102	07/00-07/02	C 22 SEL

Engine	Information	A10	A20	A40	A50	A70	C10 - C30		C20	E01
All engines	x 1, D.I.S.						9.6172	C10		

VECTRA C

1.6	Petrol	74	08/05-08/08	Z 16 XE

Engine	Information	A10	A20	A40	A50	A70	C10 - C30		C20	E01
All engines	x 1, COIL ON PLUG, incl. spark plug connector						9.6299	C10		

1.6	Petrol	77	08/05-08/08	Z 16 XEP

Engine	Information	A10	A20	A40	A50	A70	C10 - C30		C20	E01
All engines	x 1, DELPHI, COIL ON PLUG, incl. spark plug connector						9.6350	C10		

1.6 16V	Petrol	74	06/04-10/05	Z 16 XE

Engine	Information	A10	A20	A40	A50	A70	C10 - C30		C20	E01
All engines	x 1, COIL ON PLUG, incl. spark plug connector						9.6299	C10		

1.8	Petrol	103	08/05-08/08	Z 18 XER

Engine	Information	A10	A20	A40	A50	A70	C10 - C30		C20	E01
All engines	x 1, DELPHI, COIL ON PLUG, incl. spark plug connector						9.6350	C10		

A10	CONDENSER	A20	CONTACT SET	A40	DISTRIBUTOR CAP	A50	ROTOR	A70	PICK-UP
C10	COIL	C20	IGNITION MODULE	C30	ELECTRONIC IGNITION KIT	E01	IGNITION CABLE SET		

The present application list is a brief version. For the detailed information about the possibility of installation on a specific vehicle, please refer to our web-catalogue http://catalogo.facet.eu/

Vehicle	alim.	kW	Date	Engine	FUNCTIONS ON THE VEHICLE							
					A10	A20	A40	A50	A70	C10 - C30	C20	E01
1.8	Petrol	81	04/02-07/08	ENGINE Z 18 XEL								
Engine: All engines	Information: x 1, COIL ON PLUG, incl. spark plug connector									9.6408 C10		
1.8	Petrol	90	10/03-09/06	ENGINE Z 18 XE								
Engine: All engines	Information: x 1, COIL ON PLUG, incl. spark plug connector									9.6408 C10		
1.8 16V	Petrol	81	08/02-12/06	ENGINE Z 18 XEL								
Engine: All engines	Information: x 1, COIL ON PLUG, incl. spark plug connector									9.6408 C10		
1.8 16V	Petrol	90	04/02-09/08	ENGINE Z 18 XE								
Engine: All engines	Information: x 1, COIL ON PLUG, incl. spark plug connector									9.6408 C10		
VIVARO A												
2.0 16V	Petrol	88	08/01-07/06	ENGINE F4R 720								
Engine: All engines	Information: x 4, COIL ON PLUG									9.6332 C10		
2.0 ECOTEC	Petrol	86	08/06-07/14	ENGINE F4R 820								
Engine: All engines	Information: x 4, COIL ON PLUG									9.6332 C10		
ZAFIRA A												
1.6	Petrol	76	10/03-06/05	ENGINE Z 16 XEP								
Engine: All engines	Information: x 1, DELPHI, COIL ON PLUG, incl. spark plug connector									9.6350 C10		
1.6 16V	Bi-Fuel	70	09/02-06/05	ENGINE Z 16 YNG								
Engine: All engines	Information:									9.6299 C10		
1.6 16V	Petrol	74	04/99-06/05	ENGINE X 16 XEL, Z 16 XE								
Engine: All engines	Information: x 4, COIL ON PLUG, incl. spark plug connector									9.6299 C10		
1.6 16V	Petrol	76	10/03-06/05	ENGINE Z 16 XEP								
Engine: All engines	Information:									9.6350 C10		
1.6 CNG	Petrol/ Compressed Natural Gas (CNG)	71	09/01-06/05	ENGINE Z 16 YNG								
Engine: All engines	Information: x 4, COIL ON PLUG, incl. spark plug connector									9.6299 C10		
1.6 LPG	Petrol/ Liquified Petroleum Gas (LPG)	74	04/99-06/05	ENGINE X 16 XEL, Z 16 XE								
Engine: All engines	Information: x 4, COIL ON PLUG, incl. spark plug connector									9.6299 C10		

A10	CONDENSER	A20	CONTACT SET	A40	DISTRIBUTOR CAP	A50	ROTOR	A70	PICK-UP
C10	COIL	C20	IGNITION MODULE	C30	ELECTRONIC IGNITION KIT	E01	IGNITION CABLE SET		

The present application list is a brief version. For the detailed information about the possibility of installation on a specific vehicle, please refer to our web-catalogue http://catalogo.facet.eu/

Vehicle	alim.	kW	Date	Engine	FUNCTIONS ON THE VEHICLE A10	A20	A40	A50	A70	C10 - C30	C20	E01
1.6 LPG	Petrol/ Liquified Petro-leum Gas (LPG)	76	10/03-06/05	Z 16 XE								

Engine	Information	A10	A20	A40	A50	A70	C10 - C30		C20	E01
All engines	x 1, COIL ON PLUG, incl. spark plug connector						9.6299	C10		

1.8	Petrol	81	02/03-06/05	Z 18 XEL

Engine	Information	A10	A20	A40	A50	A70	C10 - C30		C20	E01
All engines							9.6408	C10		

1.8 16V	Petrol	85	04/99-09/00	X 18 XE1

Engine	Information	A10	A20	A40	A50	A70	C10 - C30		C20	E01
All engines	x 1, COIL ON PLUG, incl. spark plug connector						9.6408	C10		

1.8 16V	Petrol	92	09/00-06/05	Z 18 XE

Engine	Information	A10	A20	A40	A50	A70	C10 - C30		C20	E01
All engines	x 1, COIL ON PLUG, incl. spark plug connector						9.6408	C10		

2.0 OPC	Petrol	141	09/01-06/05	Z 20 LET

Engine	Information	A10	A20	A40	A50	A70	C10 - C30		C20	E01
All engines	x 1, COIL ON PLUG						9.6407	C10		

2.0 OPC	Petrol	147	11/02-06/05	Z 20 LET

Engine	Information	A10	A20	A40	A50	A70	C10 - C30		C20	E01
All engines	x 1, COIL ON PLUG						9.6407	C10		

ZAFIRA B

1.6	Petrol	77	07/05-09/12	Z 16 XE1, Z 16 XEP

Engine	Information	A10	A20	A40	A50	A70	C10 - C30		C20	E01
All engines	x 1, DELPHI, COIL ON PLUG, incl. spark plug connector						9.6350	C10		

1.6	Petrol	85	01/08-04/15	A 16 XER, Z 16 XER

Engine	Information	A10	A20	A40	A50	A70	C10 - C30		C20	E01
All engines	x 1, DELPHI, COIL ON PLUG, incl. spark plug connector						9.6350	C10		

1.6 CNG	Petrol/ Com-pressed Natural Gas (CNG)	69	07/05-04/15	Z 16 YNG

Engine	Information	A10	A20	A40	A50	A70	C10 - C30		C20	E01
All engines	x 4, COIL ON PLUG, incl. spark plug connector						9.6299	C10		

1.6 CNG Turbo	Petrol/ Com-pressed Natural Gas (CNG)	110	04/10-04/15	A 16 XNT, Z16XNT

Engine	Information	A10	A20	A40	A50	A70	C10 - C30		C20	E01
All engines	x 1, DELPHI, COIL ON PLUG, incl. spark plug connector						9.6350	C10		

1.6 CNG Turbo VAN	Petrol/ Com-pressed Natural Gas (CNG)	110	02/09-04/15	A 16 XNT, Z16XNT

Engine	Information	A10	A20	A40	A50	A70	C10 - C30		C20	E01
All engines	x 1, DELPHI, COIL ON PLUG, incl. spark plug connector						9.6350	C10		

A10	CONDENSER	A20	CONTACT SET	A40	DISTRIBUTOR CAP	A50	ROTOR	A70	PICK-UP
C10	COIL	C20	IGNITION MODULE	C30	ELECTRONIC IGNITION KIT	E01	IGNITION CABLE SET		

The present application list is a brief version. For the detailed information about the possibility of installation on a specific vehicle, please refer to our web-catalogue http://catalogo.facet.eu/

Vehicle	alim.	kW	Date	Engine	FUNCTIONS ON THE VEHICLE A10	A20	A40	A50	A70	C10 - C30	C20	E01
1.6 CNG VAN	Petrol/ Com-pressed Natural Gas (CNG)	69	07/05-04/15	**Z 16 YNG**								
All engines	x 4, COIL ON PLUG, incl. spark plug connector									9.6299 C10		
1.6 FlexFuel	Petrol/ Ethanol	85	08/08-12/12	**Z 16 XER**								
All engines	x 1, DELPHI, COIL ON PLUG, incl. spark plug connector									9.6350 C10		
1.8	Petrol	103	07/05-04/15	**A 18 XER, Z 18 XER**								
All engines	x 1, DELPHI, COIL ON PLUG, incl. spark plug connector									9.6350 C10		
1.8	Petrol	88	06/13-04/15	**A 18 XEL**								
All engines	x 1, COIL ON PLUG									9.6445 C10		
1.8 LPG	Petrol/ Liquified Petro-leum Gas (LPG)	103	07/09-04/15	**Z 18 XER**								
All engines	x 1, DELPHI, COIL ON PLUG, incl. spark plug connector									9.6350 C10		
1.8 VAN	Petrol	103	07/05-04/15	**A 18 XER, Z 18 XER**								
All engines	x 1, DELPHI, COIL ON PLUG, incl. spark plug connector									9.6350 C10		
2.0	Petrol	147	07/05-12/10	**Z 20 LER**								
All engines	x 1, COIL ON PLUG									9.6407 C10		
2.0	Petrol	177	01/06-12/10	**Z 20 LEH**								
All engines	x 1, COIL ON PLUG									9.6407 C10		
2.0 VAN	Petrol	147	07/05-12/10	**Z 20 LER**								
All engines	x 1, COIL ON PLUG									9.6407 C10		
ZAFIRA TOURER												
1.4	Petrol	103	10/11->	**A 14 NET, B 14 NET**								
All engines	x 1, COIL ON RAIL									9.6447 C10		
1.4	Petrol	88	10/11->	**A 14 NEL, B 14 NEL**								
All engines	x 1, COIL ON RAIL									9.6447 C10		
1.4 LPG	Petrol/ Liquified Petro-leum Gas (LPG)	103	10/11->	**A 14 NET, B 14 NET**								
All engines	x 1, COIL ON RAIL									9.6447 C10		

A10	CONDENSER	**A20**	CONTACT SET	**A40**	DISTRIBUTOR CAP	**A50**	ROTOR	**A70**	PICK-UP
C10	COIL	**C20**	IGNITION MODULE	**C30**	ELECTRONIC IGNITION KIT	**E01**	IGNITION CABLE SET		

The present application list is a brief version. For the detailed information about the possibility of installation on a specific vehicle, please refer to our web-catalogue http://catalogo.facet.eu/

Vehicle	alim.	kW	Date	Engine	FUNCTIONS ON THE VEHICLE A10	A20	A40	A50	A70	C10 - C30	C20	E01
1.6 CNG	Petrol/ Compressed Natural Gas (CNG)	**110**	10/11->	**A 16 XNT, B 16 XNT**								

Engine	Information	A10	A20	A40	A50	A70	C10 - C30		C20	E01
All engines	x 1, DELPHI, COIL ON PLUG, incl. spark plug connector						9.6350	C10		

1.8	Petrol	**103**	10/11->	**A 18 XER**

Engine	Information	A10	A20	A40	A50	A70	C10 - C30		C20	E01
All engines	x 1, COIL ON PLUG						9.6445	C10		

1.8	Petrol	**85**	10/11->	**A 18 XEL**

Engine	Information	A10	A20	A40	A50	A70	C10 - C30		C20	E01
All engines	x 1, COIL ON PLUG						9.6445	C10		

1.8	Petrol	**88**	10/11->	**A 18 XEL**

Engine	Information	A10	A20	A40	A50	A70	C10 - C30		C20	E01
All engines							9.6445	C10		

1.8 LPG	Petrol/ Liquified Petroleum Gas (LPG)	**101**	10/11->	**A 18 XER**

Engine	Information	A10	A20	A40	A50	A70	C10 - C30		C20	E01
All engines							9.6445	C10		

A10	CONDENSER	**A20**	CONTACT SET	**A40**	DISTRIBUTOR CAP	**A50**	ROTOR	**A70**	PICK-UP
C10	COIL	**C20**	IGNITION MODULE	**C30**	ELECTRONIC IGNITION KIT	**E01**	IGNITION CABLE SET		

The present application list is a brief version. For the detailed information about the possibility of installation on a specific vehicle, please refer to our web-catalogue http://catalogo.facet.eu/

Vehicle	alim.	kW	Date	Engine	FUNCTIONS ON THE VEHICLE A10	A20	A40	A50	A70	C10 - C30	C20	E01

1007

				ENGINE
1.4	Petrol	54	04/05->	KFV (TU3A), KFV (TU3JP)

Engine	Information	A10	A20	A40	A50	A70	C10 - C30		C20	E01
All engines							9.6305	C10		

				ENGINE
1.4 16V	Petrol	65	10/05->	KFU (ET3J4)

Engine	Information	A10	A20	A40	A50	A70	C10 - C30		C20	E01
All engines	x 1, COIL ON PLUG						9.6383	C10		

				ENGINE
1.6 16V	Petrol	80	04/05->	NFU (TU5JP4)

Engine	Information	A10	A20	A40	A50	A70	C10 - C30		C20	E01
All engines	x 1, COIL ON PLUG						9.6307	C10		

104

				ENGINE
0.9	Petrol	33	09/73-10/83	108 (XV3), 108 (XV5)

Engine	Information	A10	A20	A40	A50	A70	C10 - C30		C20	E01
Eng. 108 (XV5)	version Ducellier	0.0334	1.3691/3	2.7658PHT	3.7688					
All engines			1.3676							

				ENGINE
0.9	Petrol	34	10/72-10/79	108 (XV3)

Engine	Information	A10	A20	A40	A50	A70	C10 - C30		C20	E01
All engines			1.3676							

				ENGINE
1.0	Petrol	32	09/83-06/88	108C (XV8)

Engine	Information	A10	A20	A40	A50	A70	C10 - C30		C20	E01
All engines	version Bosch			2.7524PHT	3.7556RS					
All engines									9.4005	

				ENGINE
1.1	Petrol	42	07/76-06/83	109 (XW3)

Engine	Information	A10	A20	A40	A50	A70	C10 - C30		C20	E01
All engines			1.3676							

106 I

				ENGINE
1.0	Petrol	33	09/91-03/01	CDY (TU9M), TU9

Engine	Information	A10	A20	A40	A50	A70	C10 - C30		C20	E01
Eng. TU9	version Bosch			2.7530/11PHT	3.7556RS					
Eng. TU9	version Ducellier			2.7674PHT	3.7702RS	8.3619				
Eng. TU9	version Marelli				3.8260					
Eng. TU9							9.6055	C10		4.8780
All engines	x 1, D.I.S., connector type, saw teeth						9.6088	C10		
Eng. CDY (TU9M)							9.6089	C10		4.9374

				ENGINE
1.0	Petrol	37	09/91-04/96	CDZ (TU9M)

Engine	Information	A10	A20	A40	A50	A70	C10 - C30		C20	E01
All engines							9.6089	C10		4.9374

				ENGINE
1.1	Petrol	44	08/91-04/96	H1B (TU1), HDZ (TU1M)

Engine	Information	A10	A20	A40	A50	A70	C10 - C30		C20	E01
All engines	version Bosch, ->year 01/07/92			2.7530/11PHT						
All engines	version Ducellier, ->year 01/07/92			2.7674PHT	3.7702RS	8.3619				
Eng. HDZ (TU1M)	version Bosch, ->year 01/07/92				3.7526RS					
Eng. H1B (TU1)	version Bosch				3.7556RS					
Eng. H1B (TU1)	version Marelli				3.8260					
All engines	->year 01/07/92						9.6055	C10		4.8780
Eng. HDZ (TU1M)	01/07/92 ->						9.6089	C10		4.9374

				ENGINE
1.3	Petrol	72	10/93-04/96	TU2J2

Engine	Information	A10	A20	A40	A50	A70	C10 - C30		C20	E01
All engines							9.6089	C10		4.9374

A10	CONDENSER	A20	CONTACT SET	A40	DISTRIBUTOR CAP	A50	ROTOR	A70	PICK-UP
C10	COIL	C20	IGNITION MODULE	C30	ELECTRONIC IGNITION KIT	E01	IGNITION CABLE SET		

The present application list is a brief version. For the detailed information about the possibility of installation on a specific vehicle, please refer to our web-catalogue http://catalogo.facet.eu/

Vehicle	alim.	kW	Date	Engine	FUNCTIONS ON THE VEHICLE A10	A20	A40	A50	A70	C10 - C30	C20	E01
1.4	Petrol	51	08/91-03/96	ENGINE K5A (TU3)								

Engine	Information	A10	A20	A40	A50	A70	C10 - C30	C20	E01
All engines	version Bosch			2.7530/11PHT	3.7526RS				
All engines	version Ducellier			2.7674PHT	3.7702RS	8.3619			
All engines							9.6055 C10		4.8780

1.4	Petrol	55	09/91-04/96	ENGINE KDX (TU3MC), KDY (TU3M)

Engine	Information	A10	A20	A40	A50	A70	C10 - C30	C20	E01
Eng. KDY (TU3M)	version Bosch			2.7530/11PHT	3.7556RS				
Eng. KDY (TU3M)	version Ducellier			2.7674PHT	3.7702RS	8.3619			
Eng. KDY (TU3M)							9.6055 C10		4.8780
Eng. KDX (TU3MC)							9.6089 C10		4.9374

1.4 i	Petrol	55	01/92-12/96	ENGINE TU3FMC

Engine	Information	A10	A20	A40	A50	A70	C10 - C30	C20	E01
All engines							9.6089 C10		4.9025

1.4 i	Petrol	69	01/91-12/96	ENGINE TU3FJ

Engine	Information	A10	A20	A40	A50	A70	C10 - C30	C20	E01
All engines							9.6089 C10		4.9025

1.4 i XSI	Petrol	72	09/91-03/96	ENGINE TU3J

Engine	Information	A10	A20	A40	A50	A70	C10 - C30	C20	E01
All engines							9.6089 C10		4.9374

1.4 Le Mans	Petrol	69	09/91-11/94	ENGINE KFZ (TU3J2/Z)

Engine	Information	A10	A20	A40	A50	A70	C10 - C30	C20	E01
All engines							9.6089 C10		4.9374

1.6	Petrol	65	06/93-04/96	ENGINE NFZ (TU5JP)

Engine	Information	A10	A20	A40	A50	A70	C10 - C30	C20	E01
All engines							9.6089 C10		4.9374

1.6	Petrol	76	11/94-04/96	ENGINE NFY (TU5J2)

Engine	Information	A10	A20	A40	A50	A70	C10 - C30	C20	E01
All engines							9.6089 C10		4.9374

106 II

1.0 i	Petrol	33	05/96-10/99	ENGINE CDY (TU9M)

Engine	Information	A10	A20	A40	A50	A70	C10 - C30	C20	E01
All engines	x 1, D.I.S., connector type, saw teeth						9.6088 C10		
All engines									4.9374

1.0 i	Petrol	37	04/96-03/01	ENGINE CDZ (TU9M)

Engine	Information	A10	A20	A40	A50	A70	C10 - C30	C20	E01
All engines	x 1, D.I.S., connector type, saw teeth						9.6088 C10		
All engines									4.9374

1.1	Petrol	40	04/96->	ENGINE H1B (TU1)

Engine	Information	A10	A20	A40	A50	A70	C10 - C30	C20	E01
All engines	version Ducellier			2.7674PHT	3.7702RS	8.3619			
All engines							9.6055 C10		4.8780

1.1 BiFuel	Petrol/ Liquified Petro-leum Gas (LPG)	44	04/96-03/01	ENGINE HDZ (TU1M+)

Engine	Information	A10	A20	A40	A50	A70	C10 - C30	C20	E01
All engines	x 1, D.I.S., connector type, saw teeth						9.6088 C10		

A10	CONDENSER	A20	CONTACT SET	A40	DISTRIBUTOR CAP	A50	ROTOR	A70	PICK-UP
C10	COIL	C20	IGNITION MODULE	C30	ELECTRONIC IGNITION KIT	E01	IGNITION CABLE SET		

The present application list is a brief version. For the detailed information about the possibility of installation on a specific vehicle, please refer to our web-catalogue http://catalogo.facet.eu/

Vehicle	alim.	kW	Date	Engine	FUNCTIONS ON THE VEHICLE A10	A20	A40	A50	A70	C10 - C30	C20	E01
1.1 i	Petrol	40	01/97-03/01	**HDY (TU1M), HDY (TU1M+)**								
Eng. HDY (TU1M+)	x 1, D.I.S., connector type, saw teeth									9.6088 C10		
Eng. HDY (TU1M)												4.9374
1.1 i	Petrol	44	05/96-07/04	**HDZ (TU1M), HFX (TU1JP)**								
Eng. HDZ (TU1M)										9.6088 C10		4.9374
Eng. HFX (TU1JP)										9.6305 C10		
1.4 i	Petrol	55	05/96-07/04	**KFW (TU3JP), KFX (TU3JP)**								
All engines	x 1, D.I.S., connector type, saw teeth									9.6088 C10		
All engines	euro 2, x 4, Electricfil, COIL ON PLUG									9.6303 C10		
All engines	euro 3, x 1, COIL ON PLUG									9.6305 C10		
All engines	->year 04/01/98, man., aut.											4.9374
1.6 i	Petrol	65	05/96-10/99	**NFZ (TU5JP)**								
All engines	x 1, D.I.S., connector type, saw teeth									9.6088 C10		
All engines												4.9374
1.6 i	Petrol	74	05/96-01/01	**NFW (TU5J2), NFY (TU5J2)**								
All engines	x 1, D.I.S.									9.6089 C10		
All engines												4.9374
107												
1.0	Petrol	50	06/05-05/14	**1KR (384 F), CFA (384F), CFB (1KR)**								
Eng. 1KR (384 F)	Qty: 3									9.6361 C10		
Eng. CFA (384F), CFB (1KR)	x 3, COIL ON PLUG									9.6361 C10		
108												
1.0 VTi	Petrol	51	05/14->	**1KR-FE, CFB (1KR)**								
Eng. 1KR-FE	Qty: 3									9.6359 C10		
Eng. CFB (1KR)	euro5/euro6, x 3, COIL ON PLUG									9.6359 C10		
1.0 VTi 72	Petrol	53	05/18->	**CFB (1KR)**								
All engines	euro5/euro6, x 3, COIL ON PLUG									9.6359 C10		
1.2	Petrol	60	05/14->	**HMT (EB2D), HMZ (EB2), HMZ (EB2F)**								
All engines	x 3, COIL ON PLUG									9.6509 C10		
1.2 VTi	Petrol	60	05/14->	**HMZ (EB2)**								
All engines	Qty: 3									9.6509 C10		
108 1.2	Petrol	60	05/14->	**HMZ (EB2F)**								
All engines	Qty: 3									9.6509 C10		

A10	CONDENSER	**A20**	CONTACT SET	**A40**	DISTRIBUTOR CAP	**A50**	ROTOR	**A70**	PICK-UP
C10	COIL	**C20**	IGNITION MODULE	**C30**	ELECTRONIC IGNITION KIT	**E01**	IGNITION CABLE SET		

The present application list is a brief version. For the detailed information about the possibility of installation on a specific vehicle, please refer to our web-catalogue http://catalogo.facet.eu/

Vehicle	alim.	kW	Date	Engine	FUNCTIONS ON THE VEHICLE A10	A20	A40	A50	A70	C10 - C30	C20	E01
2008 I												
1.2 PureTech 82	Petrol	61	01/18-12/19	ENGINE: HMR (EB2FA)								
Engine: All engines	Information: x 3, COIL ON PLUG									9.6509 C10		
1.2 THP 130 / PureTech 130	Petrol	96	01/15->	ENGINE: HNS (EB2ADTS), HNY (EB2DTS)								
Engine: All engines	Information: x 3, COIL ON PLUG									9.6520 C10		
1.2 VTi	Petrol	60	03/13->	ENGINE: HMZ (EB2), HMZ (EB2F)								
Engine: All engines	Information: x 3, COIL ON PLUG									9.6509 C10		
Eng. HMZ (EB2)	Qty: 3									9.6509 C10		
1.6 VTi	Petrol	85	05/13->	ENGINE: 5FS (EP6C)								
Engine: All engines	Information: x 4, COIL ON PLUG									9.6375 C10		
1.6 VTi	Petrol	88	03/13->	ENGINE: 5FS (EP6C)								
Engine: All engines	Information: x 4, COIL ON PLUG									9.6375 C10		
PureTech 130	Petrol	96	01/18->	ENGINE: HNS (EB2ADTS), HNY (EB2DTS)								
Engine: All engines	Information: x 3, COIL ON PLUG									9.6520 C10		
204												
1.1	Petrol	39	10/65-07/69	ENGINE: XK								
Engine: All engines	Information:					1.3691/11U		3.7514RS				
1.1	Petrol	40	05/69-07/77	ENGINE: XK4								
Engine: All engines	Information:					1.3691/11U		3.7514RS				
1.1	Petrol	43	09/75-07/77	ENGINE: XK5								
Engine: All engines	Information:					1.3691/11U		3.7514RS				
1.1 Grand Luxe	Petrol	40	05/69-10/77	ENGINE: XK4								
Engine: All engines	Information:					1.3691/11U		3.7514RS				
205 I												
1.0	Petrol	33	02/83-12/90	ENGINE: 108C (XV8)								
Engine: All engines	Information: version Bosch						2.7524PHT	3.7556RS				
All engines	version Ducellier, distr. num. 2525569 A						2.7658PHT					
All engines	version Ducellier, distr. num. 2525569 B						2.7667PHT					
All engines	version Ducellier							3.7694				
All engines											9.4005	
1.1	Petrol	36	02/83-10/87	ENGINE: 109N (XW7)								
Engine: All engines	Information: version Ducellier, distr. num. 525 483 A, distr. num. 525 512 A, distr. num. 525 512 B, distr. num. 525 480 A, 2 525 574 A						2.7658PHT					
All engines	version Ducellier, distr. num. 525 512 C, 2 525 574 B						2.7667PHT					
All engines	version Ducellier							3.7694				
All engines											9.4005	4.8846

A10	CONDENSER	A20	CONTACT SET	A40	DISTRIBUTOR CAP	A50	ROTOR	A70	PICK-UP
C10	COIL	C20	IGNITION MODULE	C30	ELECTRONIC IGNITION KIT	E01	IGNITION CABLE SET		

The present application list is a brief version. For the detailed information about the possibility of installation on a specific vehicle, please refer to our web-catalogue http://catalogo.facet.eu/

Vehicle	alim.	kW	Date	Engine	FUNCTIONS ON THE VEHICLE A10	A20	A40	A50	A70	C10 - C30	C20	E01
1.1	Petrol	37	02/83-10/87	ENGINE 109F (XW7)								
All engines	version Ducellier, distr. num. 525 483 A, distr. num. 525 512 A, distr. num. 525 512 B, distr. num. 525 480 A, 2 525 574 A			2.7658PHT								
All engines	version Ducellier, distr. num. 525 512 C, 2 525 574 B			2.7667PHT								
All engines	version Ducellier			3.7694								
All engines											9.4005	4.8846
1.3	Petrol	47	02/84-10/87	ENGINE G1A								
All engines	version Bosch			2.7524PHT	3.7561RS							
All engines	version Ducellier			2.7658PHT	3.7694							
All engines	01/01/89 ->									9.6006	C10	
All engines											9.4005	
1.4	Petrol	44	02/83-10/87	ENGINE 150D (XY7), 150G (XY7)								
Eng. 150G (XY7)	version Bosch			2.7524PHT	3.7556RS							
All engines	version Ducellier, distr. num. 525 520 A/B, distr. num. 525 490 A, 525 475 A			2.7658PHT								
All engines	distr. num. 2 525 20 C, version Ducellier, distr. num. 525 490 B/C			2.7667PHT								
All engines	version Ducellier				3.7694							
All engines											9.4005	4.8846
1.4	Petrol	53	02/83-10/87	ENGINE 150 (XY6B)								
All engines	version Ducellier, distr. num. 525 520 A/B			2.7658PHT								
All engines	distr. num. 2 525 20 C, version Ducellier			2.7667PHT								
All engines	version Ducellier				3.7694							
All engines											9.4005	4.8846
1.4	Petrol	58	10/85-10/87	ENGINE 150H (XY8)								
All engines	version Bosch			2.7524PHT	3.7556RS							
All engines	version Ducellier			2.7658PHT	3.7694							
All engines											9.4005	4.8846
1.4	Petrol	59	02/83-10/87	ENGINE 150B (XY8)								
All engines	version Bosch			2.7524PHT	3.7556RS							
All engines	version Ducellier			2.7658PHT	3.7694							
All engines											9.4005	4.8846
1.5	Petrol	63	02/84-10/87	ENGINE Y2/K								
All engines	version Bosch			2.7524PHT	3.7525RS							
All engines	version Ducellier			2.7658PHT	3.7694							
All engines	01/01/89 ->									9.6006	C10	
All engines											9.4005	
1.6	Petrol	53	03/87-10/87	ENGINE B1E (XU51C)								
All engines	version Bosch			2.7524PHT	3.7556RS							
All engines	version Ducellier, distr. num. 2 525 626 A			2.7658PHT								
All engines	version Ducellier, distr. num. 2 525 626 B/C			2.7667PHT								
All engines	version Ducellier, distr. num. 2 525 663 A			2.7674PHT	3.7702RS	8.3619						
All engines	version Ducellier, distr. num. 2 525 626 A/B/C				3.7694							
All engines	version Ducellier, distr. num. 2 525 640 B/C					8.3617						
All engines											9.4005	
All engines	ch. 7330001 ->, ->year 01/01/90											4.8747
All engines	01/01/90 ->											4.8748

A10	CONDENSER	A20	CONTACT SET	A40	DISTRIBUTOR CAP	A50	ROTOR	A70	PICK-UP
C10	COIL	C20	IGNITION MODULE	C30	ELECTRONIC IGNITION KIT	E01	IGNITION CABLE SET		

The present application list is a brief version. For the detailed information about the possibility of installation on a specific vehicle, please refer to our web-catalogue http://catalogo.facet.eu/

Vehicle	alim.	kW	Date	Engine	FUNCTIONS ON THE VEHICLE A10	A20	A40	A50	A70	C10 - C30	C20	E01
1.6	Petrol	55	08/86-10/87	ENGINE B1A (XU51C), BAZ (XU5CP)								

Engine	Information	A10	A20	A40	A50	A70	C10 - C30	C20	E01
All engines	version Bosch			2.7524PHT	3.7556RS				
All engines	version Ducellier, distr. num. 2 525 626 A			2.7658PHT					
All engines	version Ducellier, distr. num. 2 525 626 B/C, distr. num. 2 525 626 B/C, distr. num. 2 525 683 A/B			2.7667PHT					
Eng. B1A (XU51C)	version Ducellier, distr. num. 2 525 663 A			2.7674PHT	3.7702RS	8.3619			
All engines	version Ducellier, distr. num. 2 525 626 A/B/C				3.7694				
All engines	version Ducellier, distr. num. 2 525 640 B/C, distr. num. 2 525 626 B/C, distr. num. 2 525 683 A/B					8.3617			
All engines								9.4005	
All engines	ch. 7330001 ->, ->year 01/01/90								4.8747
Eng. B1A (XU51C)	01/01/90 ->								4.8748

1.6 GTI	Petrol	76	12/84-10/87	ENGINE 180A (XU5J)

Engine	Information	A10	A20	A40	A50	A70	C10 - C30	C20	E01
All engines	version Bosch			2.7524PHT	3.7556RS				
All engines								9.4005	
All engines	ch. 7330001 ->								4.8747

1.6 GTI	Petrol	85	02/83-07/87	ENGINE B6D (XU5JA)

Engine	Information	A10	A20	A40	A50	A70	C10 - C30	C20	E01
All engines	version Bosch			2.7524PHT	3.7556RS				
All engines								9.4005	
All engines	01/01/90 ->								4.8491
All engines	ch. 7330001 ->, ->year 01/01/90								4.8747

1.9 GTI	Petrol	75	03/87-10/87	ENGINE DFZ (XU9J1)

Engine	Information	A10	A20	A40	A50	A70	C10 - C30	C20	E01
All engines	version Bosch			2.7524PHT	3.7556RS				
All engines	version Ducellier			2.7667PHT	3.7694	8.3617			
All engines								9.4005	
All engines	ch. 7330001 ->								4.8747

1.9 GTI	Petrol	94	10/86-10/87	ENGINE D6B (XU9JA)

Engine	Information	A10	A20	A40	A50	A70	C10 - C30	C20	E01
All engines	version Bosch			2.7530/11PHT	3.7556RS				
All engines							9.6005 C10	9.4005	

205 II

1.0	Petrol	33	10/87-09/98	ENGINE TU9

Engine	Information	A10	A20	A40	A50	A70	C10 - C30	C20	E01
All engines	version Bosch			2.7530/11PHT	3.7556RS				
All engines	version Ducellier			2.7674PHT	3.7702RS	8.3619			
All engines	version Marelli				3.8260				
All engines	See connection type						9.6005, 9.6055 C10		
All engines									4.8780

1.0	Petrol	37	08/92-05/97	ENGINE CDZ (TU9M)

Engine	Information	A10	A20	A40	A50	A70	C10 - C30	C20	E01
All engines							9.6089 C10		

1.1	Petrol	36	10/87-10/90	ENGINE 109N (XW7)

Engine	Information	A10	A20	A40	A50	A70	C10 - C30	C20	E01
All engines	version Ducellier, distr. num. 525 483 A, distr. num. 525 512 A, distr. num. 525 512 B, distr. num. 525 480 A, 2 525 574 A			2.7658PHT					
All engines	version Ducellier, distr. num. 525 512 C, 2 525 574 B			2.7667PHT					
All engines	version Ducellier				3.7694				
All engines								9.4005	

A10	CONDENSER	A20	CONTACT SET	A40	DISTRIBUTOR CAP	A50	ROTOR	A70	PICK-UP
C10	COIL	C20	IGNITION MODULE	C30	ELECTRONIC IGNITION KIT	E01	IGNITION CABLE SET		

The present application list is a brief version. For the detailed information about the possibility of installation on a specific vehicle, please refer to our web-catalogue http://catalogo.facet.eu/

Vehicle	alim.	kW	Date	Engine	FUNCTIONS ON THE VEHICLE							
					A10	A20	A40	A50	A70	C10 - C30	C20	E01

ENGINE				
1.1	Petrol	40	10/87-12/94	H1B (TU1)

Engine	Information	A10	A20	A40	A50	A70	C10 - C30		C20	E01
All engines	version Bosch			2.7530/11PHT	3.7556RS					
All engines	version Ducellier			2.7674PHT	3.7702RS	8.3619				
All engines	See connection type						9.6005, 9.6055	C10		
All engines										4.8780

ENGINE				
1.1	Petrol	44	07/89-09/98	HDZ (TU1M)

Engine	Information	A10	A20	A40	A50	A70	C10 - C30		C20	E01
All engines	version Bosch			2.7530/11PHT	3.7526RS					
All engines	version Ducellier			2.7674PHT	3.7702RS	8.3619				
All engines	->ch. 2490280						9.6005	C10		
All engines	ch. 2490281 ->						9.6089	C10		
All engines	->ch. 24902800									4.8780

ENGINE				
1.1 CJ	Petrol	44	10/89-12/94	HDZ (TU1M)

Engine	Information	A10	A20	A40	A50	A70	C10 - C30		C20	E01
All engines	version Bosch			2.7530/11PHT	3.7556RS					
All engines	version Ducellier			2.7674PHT	3.7702RS	8.3619				
All engines							9.6005	C10		4.8780

ENGINE				
1.1 XA	Petrol	40	07/87-10/88	E1

Engine	Information	A10	A20	A40	A50	A70	C10 - C30		C20	E01
All engines	version Bosch			2.7524PHT	3.7561RS					
All engines	version Ducellier			2.7658PHT	3.7694					
All engines	01/01/89 ->						9.6006	C10		
All engines									9.4005	

ENGINE				
1.2	Petrol	47	01/87-12/90	F1

Engine	Information	A10	A20	A40	A50	A70	C10 - C30		C20	E01
All engines	version Bosch			2.7524PHT	3.7561RS					
All engines	version Ducellier			2.7658PHT	3.7694					
All engines	01/01/89 ->						9.6006	C10		
All engines									9.4005	

ENGINE				
1.3	Petrol	47	08/90-07/92	G1A

Engine	Information	A10	A20	A40	A50	A70	C10 - C30		C20	E01
All engines	version Bosch			2.7524PHT	3.7561RS					
All engines	version Ducellier			2.7658PHT	3.7694					
All engines							9.6006	C10	9.4005	

ENGINE				
1.3	Petrol	74	01/91-12/94	TU24

Engine	Information	A10	A20	A40	A50	A70	C10 - C30		C20	E01
All engines	version Bosch			2.7530/11PHT						
All engines							9.6005	C10		

ENGINE				
1.3 Rallye	Petrol	74	10/87-10/90	TU24

Engine	Information	A10	A20	A40	A50	A70	C10 - C30		C20	E01
All engines	version Bosch			2.7530/11PHT						
All engines							9.6005	C10		

ENGINE				
1.4	Petrol	44	10/87-05/89	150D (XY7), 150G (XY7)

Engine	Information	A10	A20	A40	A50	A70	C10 - C30		C20	E01
Eng. 150G (XY7)	version Bosch			2.7524PHT	3.7556RS					
Eng. 150G (XY7)	version Ducellier, distr. num. 525 490 A, 525 475 A			2.7658PHT						
All engines	version Ducellier, distr. num. 525 490 B/C			2.7667PHT						
All engines	version Ducellier				3.7694					
All engines									9.4005	
Eng. 150G (XY7)										4.8846

A10	CONDENSER	A20	CONTACT SET	A40	DISTRIBUTOR CAP	A50	ROTOR	A70	PICK-UP
C10	COIL	C20	IGNITION MODULE	C30	ELECTRONIC IGNITION KIT	E01	IGNITION CABLE SET		

The present application list is a brief version. For the detailed information about the possibility of installation on a specific vehicle, please refer to our web-catalogue http://catalogo.facet.eu/

Vehicle	alim.	kW	Date	Engine	FUNCTIONS ON THE VEHICLE A10	A20	A40	A50	A70	C10 - C30	C20	E01
1.4	Petrol	49	10/87-10/90	ENGINE K1D (TU3A)								
Eng.	Information											
All engines	version Bosch			2.7530/11PHT	3.7556RS							
All engines	version Ducellier			2.7674PHT	3.7702RS	8.3619						
All engines							9.6005	C10		4.8780		
1.4	Petrol	53	01/87-07/88	ENGINE 150 (XY6B)								
Eng.	Information											
All engines	version Ducellier			2.7667PHT	3.7694							
All engines									9.4005			
1.4	Petrol	55	07/88-09/98	ENGINE KDX (TU3MC), KDY (TU3M), KDZ (TU3M)								
Eng.	Information											
Eng. KDY (TU3M), KDZ (TU3M)	version Bosch			2.7530/11PHT								
Eng. KDY (TU3M), KDZ (TU3M)	version Ducellier			2.7674PHT	3.7702RS	8.3619						
Eng. KDY (TU3M), KDZ (TU3M)	version Bosch, distr. num. 0 237 009 624				3.7526RS							
Eng. KDY (TU3M), KDZ (TU3M)							9.6005	C10		4.8780		
Eng. KDX (TU3MC)							9.6089	C10				
1.4	Petrol	58	07/88-05/89	ENGINE 150B (XY8), 150H (XY8)								
Eng.	Information											
All engines	version Bosch			2.7524PHT	3.7556RS							
All engines	version Ducellier, distr. num. 2 525 585 A			2.7658PHT								
Eng. 150B (XY8)	version Ducellier, distr. num. 2 525 585 B, 2 525 567 A			2.7667PHT								
All engines	version Ducellier				3.7694							
All engines									9.4005			
Eng. 150H (XY8)										4.8846		
1.4	Petrol	62	06/87-12/89	ENGINE K2B (TU3S)								
Eng.	Information											
All engines	version Bosch			2.7530/11PHT	3.7556RS							
All engines	version Ducellier			2.7674PHT	3.7702RS	8.3619						
All engines							9.6005	C10		4.8780		
1.4 Cat	Petrol	44	08/87-09/93	ENGINE KAY (TU3CP)								
Eng.	Information											
All engines	version Bosch			2.7530/11PHT	3.7556RS							
All engines							9.6005	C10		4.8780		
1.4 CJ	Petrol	44	03/88-05/89	ENGINE 150D (XY7), 150G (XY7)								
Eng.	Information											
Eng. 150G (XY7)	version Bosch			2.7524PHT	3.7556RS							
All engines	version Ducellier, distr. num. 525 490 A, 525 475 A, distr. num. 525 520 A/B			2.7658PHT								
All engines	version Ducellier, distr. num. 2 525 20 C, distr. num. 525 490 B/C			2.7667PHT								
All engines	version Ducellier				3.7694							
All engines									9.4005	4.8846		
1.4 CJ	Petrol	49	03/89-12/94	ENGINE K1D (TU3A)								
Eng.	Information											
All engines	version Bosch			2.7530/11PHT	3.7556RS							
All engines	version Ducellier			2.7674PHT	3.7702RS	8.3619						
All engines							9.6005	C10		4.8780		
1.4 CJ	Petrol	55	05/91-12/94	ENGINE KDY (TU3M), KDZ (TU3M)								
Eng.	Information											
All engines	version Bosch			2.7530/11PHT								
Eng. KDY (TU3M)	version Ducellier			2.7674PHT	3.7702RS	8.3619						
All engines	version Bosch, distr. num. 0 237 009 624				3.7526RS							
All engines							9.6005	C10		4.8780		

A10	CONDENSER	A20	CONTACT SET	A40	DISTRIBUTOR CAP	A50	ROTOR	A70	PICK-UP
C10	COIL	C20	IGNITION MODULE	C30	ELECTRONIC IGNITION KIT	E01	IGNITION CABLE SET		

The present application list is a brief version. For the detailed information about the possibility of installation on a specific vehicle, please refer to our web-catalogue http://catalogo.facet.eu/

Vehicle	alim.	kW	Date	Engine	FUNCTIONS ON THE VEHICLE A10	A20	A40	A50	A70	C10 - C30	C20	E01
1.4 CJ Cat	Petrol	44	01/89-09/93	**KAY (TU3CP)**								
All engines	version Bosch						2.7530/11PHT	3.7556RS				
All engines										9.6005 C10		4.8780
1.4 CT	Petrol	58	04/86-12/88	**150B (XY8), 150H (XY8)**								
All engines	version Bosch						2.7524PHT	3.7556RS				
All engines	version Ducellier						2.7658PHT	3.7694				
All engines											9.4005	4.8846
1.6	Petrol	53	10/87-09/98	**B1E (XU51C)**								
All engines	version Bosch						2.7524PHT	3.7556RS				
All engines	version Ducellier, distr. num. 2 525 626 A						2.7658PHT					
All engines	version Ducellier, distr. num. 2 525 626 B/C						2.7667PHT					
All engines	version Ducellier, distr. num. 2 525 663 A						2.7674PHT	3.7702RS	8.3619			
All engines	version Ducellier, distr. num. 2 525 626 A/B/C							3.7694				
All engines	version Ducellier, distr. num. 2 525 640 B/C								8.3617			
All engines											9.4005	
All engines	ch. 7330001 ->, ->year 01/01/90											4.8747
All engines	01/01/90 ->											4.8748
1.6	Petrol	55	10/87-09/98	**B1A (XU51C), BAZ (XU5CP)**								
All engines	version Bosch						2.7524PHT	3.7556RS				
All engines	version Ducellier, distr. num. 2 525 626 A						2.7658PHT					
All engines	version Ducellier, distr. num. 2 525 626 B/C, distr. num. 2 525 626 B/C, distr. num. 2 525 683 A/B						2.7667PHT					
Eng. B1A (XU51C)	version Ducellier, distr. num. 2 525 663 A						2.7674PHT	3.7702RS	8.3619			
All engines	version Ducellier, distr. num. 2 525 626 A/B/C							3.7694				
All engines	version Ducellier, distr. num. 2 525 640 B/C, distr. num. 2 525 626 B/C, distr. num. 2 525 683 A/B								8.3617			
All engines											9.4005	
All engines	ch. 7330001 ->, ->year 01/01/90											4.8747
Eng. B1A (XU51C)	01/01/90 ->											4.8748
1.6 CTI	Petrol	76	03/86-10/90	**180A (XU5J), 180Z (XU5J)**								
All engines	version Bosch						2.7524PHT	3.7556RS				
All engines											9.4005	
All engines	ch. 7330001 ->											4.8747
1.6 GTI	Petrol	76	10/87-12/89	**180A (XU5J), 180Z (XU5J)**								
All engines	version Bosch						2.7524PHT	3.7556RS				
All engines											9.4005	
All engines	ch. 7330001 ->											4.8747
1.6 i	Petrol	0	01/91-12/94	**BDZ (XU5M)**								
All engines										9.6088 C10		4.8674
1.9 CTI	Petrol	75	10/87-12/94	**DFZ (XU9J1)**								
All engines	version Bosch						2.7524PHT	3.7556RS				
All engines	version Ducellier						2.7667PHT	3.7694	8.3617			
All engines	01/03/91 ->									9.6005 C10		
All engines											9.4005	
All engines	->year 01/03/91											4.8747

A10	CONDENSER	**A20**	CONTACT SET	**A40**	DISTRIBUTOR CAP	**A50**	ROTOR	**A70**	PICK-UP
C10	COIL	**C20**	IGNITION MODULE	**C30**	ELECTRONIC IGNITION KIT	**E01**	IGNITION CABLE SET		

The present application list is a brief version. For the detailed information about the possibility of installation on a specific vehicle, please refer to our web-catalogue http://catalogo.facet.eu/

Vehicle	alim.	kW	Date	Engine	FUNCTIONS ON THE VEHICLE: A10	A20	A40	A50	A70	C10 - C30	C20	E01
1.9 GTI	Petrol	88	10/87-10/94	**DKZ (XU9JAZ)**								

Engine	Information	A10	A20	A40	A50	A70	C10 - C30	C20	E01
All engines	version Ducellier			2.7674PHT	3.7702RS				
All engines	01/01/90 ->						9.6005 C10		4.8491
All engines								9.4005	

1.9 GTI	Petrol	94	10/87-09/98	**D6B (XU9JA)**

Engine	Information	A10	A20	A40	A50	A70	C10 - C30	C20	E01
All engines	version Bosch			2.7530/11PHT	3.7556RS				
All engines							9.6005 C10	9.4005	4.8491

1.9 GTI Cat	Petrol	75	10/87-07/94	**DFZ (XU9J1)**

Engine	Information	A10	A20	A40	A50	A70	C10 - C30	C20	E01
All engines	version Bosch			2.7524PHT	3.7556RS				
All engines	version Ducellier			2.7667PHT	3.7694	8.3617			
All engines	01/03/91 ->						9.6005 C10		
All engines								9.4005	
All engines	->year 01/03/91								4.8747

206

1.1	Petrol	40	08/98-07/00	**HFY (TU1JP)**

Engine	Information	A10	A20	A40	A50	A70	C10 - C30	C20	E01
All engines	euro 2, x 4, Electricfil, COIL ON PLUG						9.6303 C10		
All engines	euro 3, x 1, COIL ON PLUG						9.6305 C10		

1.1	Petrol	44	07/02-02/07	**HFX (TU1JP), HFZ (TU1JP)**

Engine	Information	A10	A20	A40	A50	A70	C10 - C30	C20	E01
All engines	euro 2, x 4, Electricfil, COIL ON PLUG						9.6303 C10		
All engines	euro 3, x 1, COIL ON PLUG						9.6305 C10		

1.1 i	Petrol	44	09/98-02/07	**HFX (TU1JP), HFZ (TU1JP)**

Engine	Information	A10	A20	A40	A50	A70	C10 - C30	C20	E01
All engines	euro 2, x 4, Electricfil, COIL ON PLUG						9.6303 C10		
All engines	euro 3, x 1, COIL ON PLUG						9.6305 C10		

1.4	Petrol	55	07/02->	**KFV (TU3A), KFW (TU3JP)**

Engine	Information	A10	A20	A40	A50	A70	C10 - C30	C20	E01
All engines							9.6305 C10		
All engines	x 4, COIL ON PLUG						9.6305 C10		

1.4 16V	Petrol	65	10/03->	**KFU (ET3J4)**

Engine	Information	A10	A20	A40	A50	A70	C10 - C30	C20	E01
All engines	x 1, COIL ON PLUG						9.6383 C10		

1.4 CNG	Petrol/ Compressed Natural Gas (CNG)	55	05/06-09/07	**KFW (TU3A)**

Engine	Information	A10	A20	A40	A50	A70	C10 - C30	C20	E01
All engines	x 4, COIL ON PLUG						9.6305 C10		

1.4 i	Petrol	55	09/98->	**K6C (TU3JP), K6D (TU3A), K6D (TU3JP), KFW (TU3A), KFW (TU3JP), KFX (TU3JP), TU3AF**

Engine	Information	A10	A20	A40	A50	A70	C10 - C30	C20	E01
Eng. K6C (TU3JP), KFX (TU3JP)							9.6303 C10		

A10	CONDENSER	**A20**	CONTACT SET	**A40**	DISTRIBUTOR CAP	**A50**	ROTOR	**A70**	PICK-UP
C10	COIL	**C20**	IGNITION MODULE	**C30**	ELECTRONIC IGNITION KIT	**E01**	IGNITION CABLE SET		

The present application list is a brief version. For the detailed information about the possibility of installation on a specific vehicle, please refer to our web-catalogue http://catalogo.facet.eu/

Vehicle	alim.	kW	Date	Engine	FUNCTIONS ON THE VEHICLE A10	A20	A40	A50	A70	C10 - C30	C20	E01
1.4 i	Petrol	55	09/98->	**K6C (TU3JP), K6D (TU3A), K6D (TU3JP), KFW (TU3A), KFW (TU3JP), KFX (TU3JP), TU3AF**								

Engine	Information	A10	A20	A40	A50	A70	C10 - C30		C20	E01
Eng. K6D (TU3A), K6D (TU3JP), KFW (TU3A), KFW (TU3JP), TU3AF							9.6305	C10		

1.4 LPG	Petrol/ Liquified Petro-leum Gas (LPG)	55	07/02-09/07	KFV (TU3JP), KFW (TU3JP)

Engine	Information	A10	A20	A40	A50	A70	C10 - C30		C20	E01
All engines	x 1, COIL ON PLUG						9.6305	C10		

1.6	Petrol	81	09/01-12/08	NFU (TU5JP4)

Engine	Information	A10	A20	A40	A50	A70	C10 - C30		C20	E01
All engines	x 1, COIL ON PLUG						9.6307	C10		

1.6 16V	Petrol	79	06/01-04/09	NFU (TU5JP4)

Engine	Information	A10	A20	A40	A50	A70	C10 - C30		C20	E01
All engines	x 1, COIL ON PLUG						9.6307	C10		

1.6 16V	Petrol	80	07/00->	N6A (TU5JP4), NFU (TU5JP4)

Engine	Information	A10	A20	A40	A50	A70	C10 - C30		C20	E01
Eng. N6A (TU5JP4)							9.6307	C10		
Eng. NFU (TU5JP4)	x 1, COIL ON PLUG						9.6307	C10		

1.6 8V	Petrol	66	05/99-10/03	NFZ (TU5JP)

Engine	Information	A10	A20	A40	A50	A70	C10 - C30		C20	E01
All engines	x 1, Electricfil, COIL ON PLUG						9.6303	C10		

1.6 BiFuel	Petrol/ Liquified Petro-leum Gas (LPG)	80	07/00-04/09	NFU (TU5JP4)

Engine	Information	A10	A20	A40	A50	A70	C10 - C30		C20	E01
All engines	x 1, COIL ON PLUG						9.6307	C10		

1.6 i	Petrol	65	09/98-12/00	NFZ (TU5JP)

Engine	Information	A10	A20	A40	A50	A70	C10 - C30		C20	E01
All engines	x 4, Electricfil, COIL ON PLUG						9.6303	C10		

1.6 LPG	Bi-Fuel	80	07/02->	NFU (TU5JP4)

Engine	Information	A10	A20	A40	A50	A70	C10 - C30		C20	E01
All engines							9.6307	C10		
All engines	x 1, COIL ON PLUG						9.6307	C10		

2.0 16V	Petrol	100	07/02-02/07	RFN (EW10J4)

Engine	Information	A10	A20	A40	A50	A70	C10 - C30		C20	E01
All engines	x 4, COIL ON PLUG						9.6308	C10		

2.0 RC	Petrol	130	07/03-12/07	RFK (EW10J4S)

Engine	Information	A10	A20	A40	A50	A70	C10 - C30		C20	E01
All engines	x 4, COIL ON PLUG						9.6409	C10		

2.0 S16	Petrol	100	06/99-12/07	RFN (EW10J4), RFR (DEW10J4)

Engine	Information	A10	A20	A40	A50	A70	C10 - C30		C20	E01
Eng. RFN (EW10J4)	x 4, COIL ON PLUG						9.6308	C10		
Eng. RFR (DEW10J4)							9.6308	C10		

A10	CONDENSER	**A20**	CONTACT SET	**A40**	DISTRIBUTOR CAP	**A50**	ROTOR	**A70**	PICK-UP
C10	COIL	**C20**	IGNITION MODULE	**C30**	ELECTRONIC IGNITION KIT	**E01**	IGNITION CABLE SET		

The present application list is a brief version. For the detailed information about the possibility of installation on a specific vehicle, please refer to our web-catalogue http://catalogo.facet.eu/

Vehicle	alim.	kW	Date	Engine	FUNCTIONS ON THE VEHICLE A10	A20	A40	A50	A70	C10 - C30	C20	E01
2.0 S16	Petrol	99	04/99-10/00	**RFR (DEW10J4), RFR (EW10J4)**								

Engine	Information	A10	A20	A40	A50	A70	C10 - C30		C20	E01
Eng. RFR (DEW10J4)							9.6308	C10		
Eng. RFR (EW10J4)	x 4, COIL ON PLUG						9.6308	C10		

206+

1.1	Petrol	44	01/09-06/13	**HFX (TU1A)**								

Engine	Information	A10	A20	A40	A50	A70	C10 - C30		C20	E01
All engines	x 1, COIL ON PLUG						9.6305	C10		

1.1 LPG	Petrol/ Liquified Petro-leum Gas (LPG)	44	04/09-06/13	**HFX (TU1A), HFX (TU1JP)**								

Engine	Information	A10	A20	A40	A50	A70	C10 - C30		C20	E01
All engines	x 1, COIL ON PLUG						9.6305	C10		

1.4 i	Petrol	54	09/10-06/13	**KFT (TU3AE5)**								

Engine	Information	A10	A20	A40	A50	A70	C10 - C30		C20	E01
All engines	x 1, COIL ON PLUG						9.6305	C10		

1.4 i	Petrol	55	01/09->	**K6D (TU3A), KFW (TU3A), TU3AE5**								

Engine	Information	A10	A20	A40	A50	A70	C10 - C30		C20	E01
Eng. K6D (TU3A), TU3AE5							9.6305	C10		
Eng. KFW (TU3A)	x 1, COIL ON PLUG						9.6305	C10		

1.6 16V	Petrol	80	07/10->	**NFU (TU5JP4)**								

Engine	Information	A10	A20	A40	A50	A70	C10 - C30		C20	E01
All engines							9.6307	C10		

207

1.4	Petrol	53	02/06-10/13	**KFT (TU3A), KFT (TU3AE5), KFV (TU3A)**								

Engine	Information	A10	A20	A40	A50	A70	C10 - C30		C20	E01
All engines	x 4, COIL ON PLUG						9.6305	C10		

1.4	Petrol	54	04/06-10/13	**KFT (TU3A), KFT (TU3AE5), KFV (TU3A)**								

Engine	Information	A10	A20	A40	A50	A70	C10 - C30		C20	E01
All engines	x 4, COIL ON PLUG						9.6305	C10		

1.4	Petrol	55	08/08-12/15	**KFV (TU3A), KFW (TU3A)**								

Engine	Information	A10	A20	A40	A50	A70	C10 - C30		C20	E01
All engines	x 4, COIL ON PLUG						9.6305	C10		

1.4 16V	Petrol	65	02/06-10/13	**KFU (ET3J4)**								

Engine	Information	A10	A20	A40	A50	A70	C10 - C30		C20	E01
All engines	x 1, COIL ON PLUG						9.6383	C10		

1.4 16V	Petrol	70	06/07-10/13	**8FS (EP3), EP3, EP3C**								

Engine	Information	A10	A20	A40	A50	A70	C10 - C30		C20	E01
All engines	x 4, COIL ON PLUG						9.6375	C10		

1.4 16V	Petrol	72	10/09-12/12	**8FR (EP3)**								

Engine	Information	A10	A20	A40	A50	A70	C10 - C30		C20	E01
All engines	x 4, COIL ON PLUG						9.6375	C10		

A10	CONDENSER	**A20**	CONTACT SET	**A40**	DISTRIBUTOR CAP	**A50**	ROTOR	**A70**	PICK-UP
C10	COIL	**C20**	IGNITION MODULE	**C30**	ELECTRONIC IGNITION KIT	**E01**	IGNITION CABLE SET		

The present application list is a brief version. For the detailed information about the possibility of installation on a specific vehicle, please refer to our web-catalogue http://catalogo.facet.eu/

Vehicle	alim.	kW	Date	Engine	FUNCTIONS ON THE VEHICLE A10	A20	A40	A50	A70	C10 - C30	C20	E01
1.4 BiFuel	Petrol/ Liquified Petro-leum Gas (LPG)	54	08/07-12/13	**KFV (TU3A)**								
Engine: All engines	Information: x 4, COIL ON PLUG									9.6305 C10		
1.4 Flex	Petrol/ Ethanol	60	11/08-12/14	**KFW (TU3A)**								
Engine: All engines	Information:									9.6305 C10		
1.4 LPG	Petrol/ Liquified Petro-leum Gas (LPG)	54	08/07-12/12	**KFV (TU3A)**								
Engine: All engines	Information: x 4, COIL ON PLUG									9.6305 C10		
1.6	Petrol	78	01/10->	**NFU (TU5JP4)**								
Engine: All engines	Information:									9.6307 C10		
1.6	Petrol	81	08/08-12/13	**N6A (TU5JP4)**								
Engine: All engines	Information:									9.6307 C10		
1.6 16V	Petrol	80	02/06-10/13	**NFU (TU5JP4)**								
Engine: All engines	Information: x 1, COIL ON PLUG									9.6307 C10		
1.6 16V	Petrol	88	06/07-10/13	**5FS (EP6C), 5FW (EP6), EP6**								
Engine: All engines	Information: x 4, COIL ON PLUG									9.6375 C10		
1.6 16V RC	Petrol	128	02/07-12/12	**5FY (EP6DTS)**								
Engine: All engines	Information: x 4, COIL ON PLUG									9.6375 C10		
1.6 16V Turbo	Petrol	110	02/06-10/13	**5FX (EP6DT)**								
Engine: All engines	Information: x 4, COIL ON PLUG									9.6375 C10		
1.6 16V Turbo	Petrol	115	10/09-12/12	**5FR (EP6DT)**								
Engine: All engines	Information: x 4, COIL ON PLUG									9.6375 C10		
1.6 16V VTi	Petrol	81	09/08-12/12	**EP6**								
Engine: All engines	Information: x 4, COIL ON PLUG									9.6375 C10		
1.6 16V VTi	Petrol	88	02/07-12/12	**5FS (EP6C), 5FW (EP6), EP6**								
Engine: All engines	Information: x 4, COIL ON PLUG									9.6375 C10		
1.6 Bioflex	Petrol/ Ethanol	83	01/08-12/13	**N6A (TU5JP4)**								
Engine: All engines	Information:									9.6307 C10		

A10	CONDENSER	**A20**	CONTACT SET	**A40**	DISTRIBUTOR CAP	**A50**	ROTOR	**A70**	PICK-UP
C10	COIL	**C20**	IGNITION MODULE	**C30**	ELECTRONIC IGNITION KIT	**E01**	IGNITION CABLE SET		

The present application list is a brief version. For the detailed information about the possibility of installation on a specific vehicle, please refer to our web-catalogue http://catalogo.facet.eu/

Vehicle	alim.	kW	Date	Engine	FUNCTIONS ON THE VEHICLE A10	A20	A40	A50	A70	C10 - C30	C20	E01
1.6 VTi	Petrol	88	03/07-12/12	5FW (EP6)								
Engine: All engines — Information: x 4, COIL ON PLUG										9.6375 C10		
207 CC												
1.6 16V	Petrol	88	02/07-10/13	5FS (EP6C), 5FW (EP6), EP6								
Engine: All engines — Information: x 4, COIL ON PLUG										9.6375 C10		
1.6 16V Turbo	Petrol	110	02/07-12/12	5FX (EP6DT)								
Engine: All engines — Information: x 4, COIL ON PLUG										9.6375 C10		
1.6 16V Turbo	Petrol	115	10/09-12/13	5FR (EP6DT), 5FV (EP6CDT)								
Engine: All engines — Information: x 4, COIL ON PLUG										9.6375 C10		
208 I												
1.0	Petrol	50	03/12->	ZMZ (EB0)								
Engine: All engines — Information: x 3, COIL ON PLUG										9.6509 C10		
1.2 GPL	Petrol/ Liquified Petro-leum Gas (LPG)	60	06/15->	HMZ (EB2F)								
Engine: All engines — Information: x 3, COIL ON PLUG										9.6509 C10		
1.2 PureTech 82	Petrol	61	03/18->	HMR (EB2FA), HMZ (EB2F)								
Engine: All engines — Information: x 3, COIL ON PLUG										9.6509 C10		
1.2 VTi	Petrol	60	09/13->	HMZ (EB2)								
Engine: All engines — Information: Qty: 3										9.6509 C10		
1.2 VTi 68 / PureTech 68	Petrol	50	06/15->	HMM (EB2FAD), HMP (EB2FB)								
Engine: All engines — Information: x 3, COIL ON PLUG										9.6509 C10		
1.2 VTi 82	Petrol	60	03/12->	HMZ (EB2), HMZ (EB2F)								
Engine: All engines — Information: x 3, COIL ON PLUG										9.6509 C10		
1.2 VTi 82 / PureTech 82	Petrol	60	06/15->	HMR (EB2FA), HMZ (EB2), HMZ (EB2F)								
Engine: All engines — Information: x 3, COIL ON PLUG										9.6509 C10		
1.4 GPL	Petrol/ Liquified Petro-leum Gas (LPG)	70	10/13->	EP3C								
Engine: All engines — Information: x 4, COIL ON PLUG										9.6375 C10		

A10	CONDENSER	A20	CONTACT SET	A40	DISTRIBUTOR CAP	A50	ROTOR	A70	PICK-UP
C10	COIL	C20	IGNITION MODULE	C30	ELECTRONIC IGNITION KIT	E01	IGNITION CABLE SET		

The present application list is a brief version. For the detailed information about the possibility of installation on a specific vehicle, please refer to our web-catalogue http://catalogo.facet.eu/

Vehicle	alim.	kW	Date	Engine	FUNCTIONS ON THE VEHICLE A10	A20	A40	A50	A70	C10 - C30	C20	E01
1.4 VTi	Petrol	70	03/12->	8FS (EP3), EP3C								
Engine: All engines — Information: x 4, COIL ON PLUG										9.6375 C10		
1.6	Petrol	115	03/12->	5FV (EP6CDT), 5FV (EP6DT)								
Engine: Eng. 5FV (EP6CDT) — Information: x 4, COIL ON PLUG										9.6375 C10		
Engine: Eng. 5FV (EP6DT) — Information: Qty: 4										9.6375 C10		
1.6	Petrol	121	02/12->	5GZ (EP6FDT)								
Engine: All engines — Information: Qty: 4										9.6375 C10		
1.6	Petrol	88	03/12->	5FS (EP6C)								
Engine: All engines — Information: x 4, COIL ON PLUG										9.6375 C10		
1.6	Petrol	89	09/16->	5FS (EP6C)								
Engine: All engines — Information: x 4, COIL ON PLUG										9.6375 C10		
1.6 GTi	Petrol	147	08/12->	5FU (EP6CDTX)								
Engine: All engines — Information: x 4, COIL ON PLUG										9.6375 C10		
1.6 GTi	Petrol	153	10/14->	9H92								
Engine: All engines — Information: x 4, COIL ON PLUG										9.6375 C10		
1.6 THP 165	Petrol	121	03/15->	5GZ (EP6FDT)								
Engine: All engines — Information: x 4, COIL ON PLUG										9.6375 C10		
1.6 THP 210	Petrol	155	04/15->	5GM (EP6FDTX)								
Engine: All engines — Information: Qty: 4										9.6375 C10		
208 II												
1.2 PureTech 75	Petrol	55	06/19->	HMH (EB2FAD)								
Engine: All engines — Information: x 3, COIL ON PLUG										9.6509 C10		
3008 I												
1.2	Petrol	96	01/15-08/16	HNY (EB2DTS)								
Engine: All engines — Information: x 3, COIL ON PLUG										9.6520 C10		
1.6 THP	Petrol	110	06/09->	5FE (EP6CDTM), 5FE (EP6CDTMD), 5FX (EP6DT), EP6CDT M								
Engine: Eng. 5FE (EP6CDTM), 5FE (EP6CDTMD), 5FX (EP6DT) — Information: x 4, COIL ON PLUG										9.6375 C10		
Engine: Eng. EP6CDT M — Information: Qty: 4										9.6375 C10		
1.6 THP	Petrol	115	06/09->	5FV (EP6CDT), 5FV (EP6DT)								
Engine: All engines — Information: Qty: 4										9.6375 C10		
Engine: Eng. 5FV (EP6CDT) — Information: x 4, COIL ON PLUG										9.6375 C10		

A10	CONDENSER	A20	CONTACT SET	A40	DISTRIBUTOR CAP	A50	ROTOR	A70	PICK-UP
C10	COIL	C20	IGNITION MODULE	C30	ELECTRONIC IGNITION KIT	E01	IGNITION CABLE SET		

The present application list is a brief version. For the detailed information about the possibility of installation on a specific vehicle, please refer to our web-catalogue http://catalogo.facet.eu/

Vehicle	alim.	kW	Date	Engine	FUNCTIONS ON THE VEHICLE A10	A20	A40	A50	A70	C10 - C30	C20	E01
1.6 THP	Petrol	120	09/10->	ENGINE: 5FM (EP6CDTM), EP6CDT MD								
Eng. 5FM (EP6CDTM)	x 4, COIL ON PLUG									9.6375 C10		
Eng. EP6CDT MD	Qty: 4									9.6375 C10		
1.6 VTi	Petrol	88	06/09-08/16	ENGINE: EP6								
All engines	x 4, COIL ON PLUG									9.6375 C10		
3008 II												
1.2 THP/ PureTech 130	Petrol	96	05/16->	ENGINE: HNS (EB2ADTS), HNY (EB2DTS)								
All engines	x 3, COIL ON PLUG									9.6520 C10		
1.6 PureTech 180	Petrol	133	07/18->	ENGINE: 5GF (EP6FADTXD)								
All engines	x 4, COIL ON PLUG									9.6375 C10		
1.6 THP 150	Petrol	110	11/17->	ENGINE: 5GX (EP6FDTMD)								
All engines	x 4, COIL ON PLUG									9.6375 C10		
1.6 THP 165	Petrol	121	05/16->	ENGINE: 5GY (EP6FDTM), 5GZ (EP6FDT)								
All engines	x 4, COIL ON PLUG									9.6375 C10		
Hybrid	Petrol/ Electric	133	10/19->	ENGINE: 5GQ (EP6FADTXHPD)								
All engines	x 4, COIL ON PLUG									9.6375 C10		
Hybrid4	Petrol/ Electric	147	10/19->	ENGINE: 5GB (EP6FADTXHPA)								
All engines	x 4, COIL ON PLUG									9.6375 C10		
PureTech 130	Petrol	96	05/16->	ENGINE: HNY (EB2DTS)								
All engines	x 3, COIL ON PLUG									9.6520 C10		
301												
1.2	Petrol	60	11/12->	ENGINE: HMZ (EB2F)								
All engines	Qty: 3									9.6509 C10		
1.2 PureTech 82	Petrol	61	02/18->	ENGINE: HMR (EB2FA)								
All engines	x 3, COIL ON PLUG									9.6509 C10		
1.2 VTi 72	Petrol	53	11/12->	ENGINE: HMY (EB2M)								
All engines	x 3, COIL ON PLUG									9.6509 C10		
1.2 VTi 82	Petrol	60	12/14->	ENGINE: HMZ (EB2F)								
All engines	x 3, COIL ON PLUG									9.6509 C10		

A10	CONDENSER	**A20**	CONTACT SET	**A40**	DISTRIBUTOR CAP	**A50**	ROTOR	**A70**	PICK-UP
C10	COIL	**C20**	IGNITION MODULE	**C30**	ELECTRONIC IGNITION KIT	**E01**	IGNITION CABLE SET		

The present application list is a brief version. For the detailed information about the possibility of installation on a specific vehicle, please refer to our web-catalogue http://catalogo.facet.eu/

Vehicle	alim.	kW	Date	Engine	FUNCTIONS ON THE VEHICLE A10	A20	A40	A50	A70	C10 - C30	C20	E01
304												
1.1	Petrol	43	10/76-10/80	ENGINE: XK5								
Engine: All engines	Information:							3.7514RS				
1.3	Petrol	48	03/70-10/80	ENGINE: XL3, XL5								
Engine: All engines	Information:							3.7514RS				
1.3	Petrol	55	03/72-07/76	ENGINE: XL3S								
Engine: All engines	Information:							3.7514RS				
1.3 GL	Petrol	48	09/72-10/79	ENGINE: XL5								
Engine: All engines	Information:							3.7514RS				
1.3 GT	Petrol	48	10/69-09/75	ENGINE: XL3								
Engine: All engines	Information:							3.7514RS				
305												
1.5	Petrol	65	05/80-09/82	ENGINE: 117 (XR5S)								
Engine: All engines	Information: 01/01/83 ->, version Ducellier				0.0334							
Engine: All engines	Information: ->year 01/01/83, version Ducellier					1.3691/2						
Engine: All engines	Information: ->year 01/01/83, version Marelli					1.4946M						
Engine: All engines	Information: version Ducellier						2.7649PHT	3.7691				
Engine: All engines	Information: version Marelli						2.8201PHT	3.8247RS				
Engine: All engines	Information: ->year 01/01/83									9.6001D C10		
Engine: All engines	Information:										9.4005	
306												
1.1	Petrol	44	05/93-05/01	ENGINE: HDZ (TU1M)								
Engine: All engines	Information:									9.6089 C10		4.9025
1.4	Petrol	55	04/93-04/02	ENGINE: KDX (TU3MC), KFW (TU3JP), KFX (TU3JP)								
Engine: Eng. KFW (TU3JP), KFX (TU3JP)	Information: ->year 31/05/98									9.6088 C10		4.9374
Engine: Eng. KDX (TU3MC)	Information:									9.6089 C10		4.9025
Engine: Eng. KFW (TU3JP), KFX (TU3JP)	Information: 01/06/98 ->, Colour:Black									9.6303 C10		
Engine: Eng. KFW (TU3JP), KFX (TU3JP)	Information: 01/06/98 ->, Colour:Grey									9.6305 C10		
1.4 SL	Petrol	55	06/94-05/01	ENGINE: KDX (TU3MC), KFW (TU3JP), KFX (TU3JP)								
Engine: Eng. KFW (TU3JP), KFX (TU3JP)	Information: ->year 31/05/98									9.6088 C10		4.9374
Engine: Eng. KDX (TU3MC)	Information:									9.6089 C10		4.9025
Engine: Eng. KFW (TU3JP), KFX (TU3JP)	Information: 01/06/98 ->, Colour:Black									9.6303 C10		
Engine: Eng. KFW (TU3JP), KFX (TU3JP)	Information: 01/06/98 ->, Colour:Grey									9.6305 C10		
1.6	Petrol	65	05/93-10/00	ENGINE: NFZ (TU5JP)								
Engine: All engines	Information: 01/05/97 ->, ->year 31/05/98									9.6088 C10		
Engine: All engines	Information: ->year 30/04/97									9.6089 C10		4.9025
Engine: All engines	Information: 01/06/98 ->									9.6303 C10		
Engine: All engines	Information: ->year 31/05/98, 01/05/97 ->											4.9374

A10	CONDENSER	A20	CONTACT SET	A40	DISTRIBUTOR CAP	A50	ROTOR	A70	PICK-UP
C10	COIL	C20	IGNITION MODULE	C30	ELECTRONIC IGNITION KIT	E01	IGNITION CABLE SET		

The present application list is a brief version. For the detailed information about the possibility of installation on a specific vehicle, please refer to our web-catalogue http://catalogo.facet.eu/

Vehicle	alim.	kW	Date	Engine	FUNCTIONS ON THE VEHICLE A10	A20	A40	A50	A70	C10 - C30	C20	E01
1.6	Petrol	72	10/00-04/02	ENGINE NFT (TU5JP)								
Engine: All engines	Information:									9.6305 C10		
1.6 SR	Petrol	65	06/94-10/00	ENGINE NFZ (TU5JP)								
All engines	01/05/97 ->, ->year 31/05/98									9.6088 C10		
All engines	->year 30/04/97									9.6089 C10		4.9025
All engines	01/06/98 ->									9.6303 C10		
All engines	->year 31/05/98, 01/05/97 ->											4.9374
1.8	Petrol	74	05/93-04/02	ENGINE --, LFZ (XU7JP)								
All engines										9.6088 C10		4.8674
1.8 ST	Petrol	74	06/94-05/01	ENGINE LFZ (XU7JP)								
All engines										9.6088 C10		4.8674
2.0	Petrol	89	03/94-04/02	ENGINE RFX (XU10J2)								
All engines										9.6088 C10		4.8494
2.0 ST	Petrol	89	07/94-05/01	ENGINE RFX (XU10J2)								
All engines										9.6088 C10		4.8494
2.0 XSi	Petrol	89	05/93-05/01	ENGINE RFX (XU10J2)								
All engines										9.6088 C10		4.8494
307												
1.4	Petrol	55	08/00-09/03	ENGINE KFW (TU3JP)								
All engines	x 1, COIL ON PLUG									9.6305 C10		
1.4 16V	Petrol	65	11/03-07/07	ENGINE KFU (ET3J4)								
All engines	x 1, COIL ON PLUG									9.6383 C10		
1.6	Petrol	81	07/06-04/12	ENGINE NFU (TU5JP4)								
All engines	x 1, COIL ON PLUG									9.6307 C10		
1.6 16V	Petrol	80	08/00->	ENGINE N6A (TU5JP4), NFU (TU5JP4)								
Eng. N6A (TU5JP4)										9.6307 C10		
Eng. NFU (TU5JP4)	x 1, COIL ON PLUG									9.6307 C10		
1.6 BioFlex	Flexfuel	81	07/06->	ENGINE --								
All engines										9.6307 C10		
1.6 BioFlex	Petrol	80	07/06->	ENGINE N6A (TU5JP4)								
All engines										9.6307 C10		
All engines	x 1, COIL ON PLUG									9.6307 C10		

A10	CONDENSER	A20	CONTACT SET	A40	DISTRIBUTOR CAP	A50	ROTOR	A70	PICK-UP
C10	COIL	C20	IGNITION MODULE	C30	ELECTRONIC IGNITION KIT	E01	IGNITION CABLE SET		

The present application list is a brief version. For the detailed information about the possibility of installation on a specific vehicle, please refer to our web-catalogue http://catalogo.facet.eu/

Vehicle	alim.	kW	Date	Engine	FUNCTIONS ON THE VEHICLE: A10	A20	A40	A50	A70	C10 - C30	C20	E01
2.0	Petrol	100	03/02-06/05	RFN (EW10J4)								

Engine	Information	A10	A20	A40	A50	A70	C10 - C30		C20	E01
All engines	x 4, COIL ON PLUG						9.6308	C10		

2.0 16V	Petrol	100	08/00-06/05	RFN (EW10J4)								

Engine	Information	A10	A20	A40	A50	A70	C10 - C30		C20	E01
All engines	x 4, COIL ON PLUG						9.6308	C10		

2.0 16V	Petrol	103	12/04-04/09	RFJ (EW10A), RFN (EW10J4)								

Engine	Information	A10	A20	A40	A50	A70	C10 - C30		C20	E01
Eng. RFN (EW10J4)							9.6308	C10		
Eng. RFJ (EW10A)	x 1, COIL ON PLUG						9.6376	C10		

2.0 16V	Petrol	130	10/03-04/09	RFK (EW10J4S)								

Engine	Information	A10	A20	A40	A50	A70	C10 - C30		C20	E01
All engines	->year 01/08/05, x 1, COIL ON PLUG						9.6376	C10		
All engines	01/09/05 ->, x 4, COIL ON PLUG, x 1, COIL ON PLUG						9.6409	C10		

308 I

1.4 16V	Petrol	70	09/07-10/14	8FS (EP3), EP3								

Engine	Information	A10	A20	A40	A50	A70	C10 - C30		C20	E01
All engines	x 4, COIL ON PLUG						9.6375	C10		

1.4 16V	Petrol	72	12/09->	8FR (EP3), EP3C								

Engine	Information	A10	A20	A40	A50	A70	C10 - C30		C20	E01
Eng. 8FR (EP3)	x 4, COIL ON PLUG						9.6375	C10		
Eng. EP3C	Qty: 4						9.6375	C10		

1.6 16V	Petrol	103	09/07-12/14	5FT (EP6DT)								

Engine	Information	A10	A20	A40	A50	A70	C10 - C30		C20	E01
All engines	x 4, COIL ON PLUG						9.6375	C10		

1.6 16V	Petrol	110	09/07-12/14	5FX (EP6DT)								

Engine	Information	A10	A20	A40	A50	A70	C10 - C30		C20	E01
All engines	x 4, COIL ON PLUG						9.6375	C10		

1.6 16V	Petrol	115	06/09-12/14	5FV (EP6CDT)								

Engine	Information	A10	A20	A40	A50	A70	C10 - C30		C20	E01
All engines	x 4, COIL ON PLUG						9.6375	C10		

1.6 16V	Petrol	128	03/08-10/14	5FY (EP6DTS)								

Engine	Information	A10	A20	A40	A50	A70	C10 - C30		C20	E01
All engines	x 4, COIL ON PLUG						9.6375	C10		

1.6 16V	Petrol	80	07/08->	N6A (TU5JP4)								

Engine	Information	A10	A20	A40	A50	A70	C10 - C30		C20	E01
All engines							9.6307	C10		

1.6 16V	Petrol	88	09/07->	5FS (EP6C), 5FW (EP6), EP6, EP6C								

Engine	Information	A10	A20	A40	A50	A70	C10 - C30		C20	E01
Eng. 5FS (EP6C), 5FW (EP6), EP6	x 4, COIL ON PLUG						9.6375	C10		
Eng. EP6C	Qty: 4						9.6375	C10		

1.6 BioFlex	Petrol	80	07/08->	N6A (TU5JP4)								

Engine	Information	A10	A20	A40	A50	A70	C10 - C30		C20	E01
All engines							9.6307	C10		
All engines	x 1, COIL ON PLUG						9.6307	C10		

A10 CONDENSER	A20 CONTACT SET	A40 DISTRIBUTOR CAP	A50 ROTOR	A70 PICK-UP
C10 COIL	C20 IGNITION MODULE	C30 ELECTRONIC IGNITION KIT	E01 IGNITION CABLE SET	

The present application list is a brief version. For the detailed information about the possibility of installation on a specific vehicle, please refer to our web-catalogue http://catalogo.facet.eu/

Vehicle	alim.	kW	Date	Engine	FUNCTIONS ON THE VEHICLE A10	A20	A40	A50	A70	C10 - C30	C20	E01
1.6 Bioflex	Petrol/ Ethanol	82	03/09-10/14	**NFU (TU5JP4)**								
All engines	x 1, COIL ON PLUG									9.6307 C10		
1.6 GTi	Petrol	147	07/10-10/14	**EP6CDTX**								
All engines	x 4, COIL ON PLUG									9.6375 C10		
1.6 THP	Petrol	110	01/11->	**EP6CDT M**								
All engines	Qty: 4									9.6375 C10		
1.6 THP	Petrol	120	01/11->	**EP6CDT MD**								
All engines	Qty: 4									9.6375 C10		
1.6 THP	Petrol	147	10/10-12/14	**EP6CDTX**								
All engines	x 4, COIL ON PLUG									9.6375 C10		
1.6 THP 16V	Petrol	115	10/09-10/14	**5FV (EP6CDT)**								
All engines	x 4, COIL ON PLUG									9.6375 C10		
2.0 Bioflex	Petrol/ Ethanol	103	01/08-12/12	**RFJ (EW10A)**								
All engines	x 1, COIL ON PLUG									9.6376 C10		
2.0 CVVT	Petrol	103	07/09-12/14	**RFJ (EW10A)**								
All engines	x 1, COIL ON PLUG									9.6376 C10		
308 II												
1.2 THP 130	Petrol	96	03/14-06/21	**HNY (EB2DTS)**								
All engines	x 3, COIL ON PLUG									9.6520 C10		
1.2 VTi 72	Petrol	60	09/13->	**HMZ (EB2), HMZ (EB2F)**								
Eng. HMZ (EB2)	Qty: 3									9.6509 C10		
Eng. HMZ (EB2F)	x 3, COIL ON PLUG									9.6509 C10		
1.6	Petrol	120	01/12->	**5GZ (EP6FDT)**								
All engines	Qty: 4									9.6375 C10		
1.6 GT 205	Petrol	151	06/14-06/21	**3AC**								
All engines	x 4, COIL ON PLUG									9.6375 C10		
1.6 GTi	Petrol	184	08/15-06/21	**6AAS**								
All engines	x 4, COIL ON PLUG									9.6375 C10		
1.6 GTi	Petrol	200	06/15-06/21	**5GN (EP6FDTR)**								
All engines	x 4, COIL ON PLUG									9.6375 C10		

A10	CONDENSER	**A20**	CONTACT SET	**A40**	DISTRIBUTOR CAP	**A50**	ROTOR	**A70**	PICK-UP
C10	COIL	**C20**	IGNITION MODULE	**C30**	ELECTRONIC IGNITION KIT	**E01**	IGNITION CABLE SET		

The present application list is a brief version. For the detailed information about the possibility of installation on a specific vehicle, please refer to our web-catalogue http://catalogo.facet.eu/

Vehicle	alim.	kW	Date	Engine	FUNCTIONS ON THE VEHICLE A10	A20	A40	A50	A70	C10 - C30	C20	E01
1.6 GTi PureTech 263	Petrol	193	07/18-06/21	**EGX (EP6FADTR)**								

Engine	Information	A10	A20	A40	A50	A70	C10 - C30		C20	E01
All engines	x 4, COIL ON PLUG						9.6375	C10		

1.6 PureTech 225	Petrol	165	01/18-06/21	5GG (EP6FADTX), GGR (EP6FADTX)

Engine	Information	A10	A20	A40	A50	A70	C10 - C30		C20	E01
All engines	x 4, COIL ON PLUG						9.6375	C10		

1.6 THP	Petrol	112	09/13-06/21	5GX (EP6FDTMD)

Engine	Information	A10	A20	A40	A50	A70	C10 - C30		C20	E01
All engines	x 4, COIL ON PLUG						9.6375	C10		

1.6 THP	Petrol	115	09/13-06/21	5FV (EP6CDT), 5FV (EP6DT)

Engine	Information	A10	A20	A40	A50	A70	C10 - C30		C20	E01
Eng. 5FV (EP6CDT)	x 4, COIL ON PLUG						9.6375	C10		
Eng. 5FV (EP6DT)	Qty: 4						9.6375	C10		

1.6 THP 125	Petrol	92	09/13-06/21	5FA (EP6CDT)

Engine	Information	A10	A20	A40	A50	A70	C10 - C30		C20	E01
All engines	x 4, COIL ON PLUG						9.6375	C10		

1.6 THP 150	Petrol	110	03/14-06/21	5GX (EP6FDTMD)

Engine	Information	A10	A20	A40	A50	A70	C10 - C30		C20	E01
All engines	x 4, COIL ON PLUG						9.6375	C10		

1.6 THP 155	Petrol	115	03/14-06/21	5FV (EP6CDT), 5FV (EP6DT)

Engine	Information	A10	A20	A40	A50	A70	C10 - C30		C20	E01
Eng. 5FV (EP6CDT)	x 4, COIL ON PLUG						9.6375	C10		
Eng. 5FV (EP6DT)	Qty: 4						9.6375	C10		

1.6 THP 163	Petrol	120	06/14-06/21	5FM (EP6CDTM)

Engine	Information	A10	A20	A40	A50	A70	C10 - C30		C20	E01
All engines	x 4, COIL ON PLUG						9.6375	C10		

1.6 THP 210	Petrol	155	04/15->	5GM (EP6FDTX)

Engine	Information	A10	A20	A40	A50	A70	C10 - C30		C20	E01
All engines	Qty: 4						9.6375	C10		

309 I

1.1	Petrol	40	10/85-07/89	E1

Engine	Information	A10	A20	A40	A50	A70	C10 - C30		C20	E01
All engines	version Bosch			2.7524PHT	3.7561RS					
All engines	version Ducellier			2.7658PHT	3.7694					
All engines	01/01/89 ->						9.6006	C10		
All engines									9.4005	

1.3	Petrol	47	10/85-07/89	G1A

Engine	Information	A10	A20	A40	A50	A70	C10 - C30		C20	E01
All engines	version Bosch			2.7524PHT	3.7561RS					
All engines	version Ducellier			2.7658PHT	3.7694					
All engines	version Bosch, distr. num. 0 237 002 114					8.2653				
All engines	01/01/89 ->						9.6006	C10		
All engines									9.4005	

1.3 XL	Petrol	52	09/86-08/89	--

Engine	Information	A10	A20	A40	A50	A70	C10 - C30		C20	E01
All engines	version Ducellier			2.7658PHT	3.7694					
All engines	01/01/89 ->						9.6006	C10		

A10	CONDENSER	**A20**	CONTACT SET	**A40**	DISTRIBUTOR CAP	**A50**	ROTOR	**A70**	PICK-UP
C10	COIL	**C20**	IGNITION MODULE	**C30**	ELECTRONIC IGNITION KIT	**E01**	IGNITION CABLE SET		

The present application list is a brief version. For the detailed information about the possibility of installation on a specific vehicle, please refer to our web-catalogue http://catalogo.facet.eu/

Vehicle	alim.	kW	Date	Engine	FUNCTIONS ON THE VEHICLE							
					A10	A20	A40	A50	A70	C10 - C30	C20	E01
1.3 XL	Petrol	52	09/86-08/89	ENGINE --								
Engine	Information											
All engines											9.4005	
1.4	Petrol	49	03/89-07/89	ENGINE K1D (TU3A)								
Engine	Information											
All engines	version Bosch						2.7530/11PHT	3.7556RS				
All engines	version Ducellier						2.7674PHT	3.7702RS	8.3619			
All engines										9.6005 C10		4.8780
1.4	Petrol	55	03/89-07/89	ENGINE KDY (TU3M), KDZ (TU3M)								
Engine	Information											
All engines	version Bosch						2.7530/11PHT	3.7526RS				
All engines	version Ducellier						2.7674PHT	3.7702RS	8.3619			
All engines										9.6005 C10		4.8780
1.4	Petrol	62	08/88-08/89	ENGINE K2B (TU3S)								
Engine	Information											
All engines	version Ducellier						2.7674PHT	3.7702RS	8.3619			
All engines										9.6005 C10		4.8780
1.5	Petrol	63	06/87-12/89	ENGINE Y2/K								
Engine	Information											
All engines	version Bosch						2.7524PHT	3.7525RS				
All engines	version Ducellier						2.7658PHT	3.7694				
All engines	01/01/89 ->									9.6006 C10		
All engines											9.4005	
1.6	Petrol	53	08/87-07/89	ENGINE B1E (XU51C)								
Engine	Information											
All engines	version Bosch						2.7524PHT	3.7556RS				
All engines	version Ducellier, distr. num. 2525640 A						2.7658PHT					
All engines	version Ducellier, distr. num. 2525640 B/C						2.7667PHT		8.3617			
All engines	version Ducellier							3.7694				
All engines											9.4005	
1.6	Petrol	55	10/85-07/89	ENGINE B1A (XU51C)								
Engine	Information											
All engines	version Bosch						2.7524PHT	3.7556RS				
All engines	version Ducellier, distr. num. 2525640 A						2.7658PHT					
All engines	version Ducellier, distr. num. 2525640 B/C						2.7667PHT		8.3617			
All engines	version Ducellier							3.7694				
All engines											9.4005	
1.6	Petrol	59	10/85-07/89	ENGINE B1A (XU51C), B1D (XU51C)								
Engine	Information											
All engines	version Bosch						2.7524PHT	3.7556RS				
All engines	version Ducellier, distr. num. 2525640 A						2.7658PHT					
All engines	version Ducellier, distr. num. 2525640 B/C						2.7667PHT		8.3617			
All engines	version Ducellier							3.7694				
All engines											9.4005	
1.6	Petrol	69	01/86-07/89	ENGINE --								
Engine	Information											
All engines	version Bosch						2.7524PHT	3.7561RS				
All engines	01/01/89 ->									9.6006 C10		
All engines											9.4005	

A10	CONDENSER	A20	CONTACT SET	A40	DISTRIBUTOR CAP	A50	ROTOR	A70	PICK-UP
C10	COIL	C20	IGNITION MODULE	C30	ELECTRONIC IGNITION KIT	E01	IGNITION CABLE SET		

The present application list is a brief version. For the detailed information about the possibility of installation on a specific vehicle, please refer to our web-catalogue http://catalogo.facet.eu/

Vehicle	alim.	kW	Date	Engine	FUNCTIONS ON THE VEHICLE A10	A20	A40	A50	A70	C10 - C30	C20	E01
1.6	Petrol	76	11/85-09/88	ENGINE 180Z (XU5J), B6B (XU5J)								
All engines				version Bosch			2.7524PHT	3.7556RS				
All engines											9.4005	
All engines				01/01/88 ->								4.8747
1.6	Petrol	83	07/86-06/89	ENGINE --								
All engines				version Bosch			2.7524PHT	3.7556RS				
All engines											9.4005	
All engines				01/01/88 ->								4.8747
1.6 Cat	Petrol	55	09/86-12/89	ENGINE BAZ (XU5CP)								
All engines				version Bosch			2.7524PHT	3.7556RS				
All engines				distr. num. 2525626 A, version Ducellier			2.7658PHT					
All engines				distr. num. 2525626 B/C, version Ducellier, distr. num. 2525683 A/B			2.7667PHT		8.3617			
All engines				version Ducellier				3.7694				
All engines											9.4005	4.8747
1.9	Petrol	72	03/86-07/89	ENGINE DFZ (XU9J1)								
All engines				version Bosch			2.7524PHT	3.7556RS				
All engines				version Ducellier			2.7667PHT	3.7694	8.3617			
All engines											9.4005	
All engines				01/01/88 ->, ->ch. 10561562								4.8747
1.9	Petrol	75	10/85-07/89	ENGINE D2B (XU9S)								
All engines				version Bosch			2.7524PHT	3.7556RS				
All engines				version Ducellier			2.7667PHT	3.7694	8.3617			
All engines											9.4005	
All engines				01/01/88 ->								4.8747
1.9 GTI	Petrol	94	10/86-07/89	ENGINE D6B (XU9JA)								
All engines				version Bosch			2.7530/11PHT	3.7556RS				
All engines											9.4005	
309 II												
1.1	Petrol	40	09/89-10/93	ENGINE H1B (TU1)								
All engines				version Bosch			2.7530/11PHT	3.7556RS				
All engines				version Ducellier			2.7674PHT	3.7702RS	8.3619			
All engines				version Marelli				3.8260				
All engines										9.6005 C10		4.8780
1.1	Petrol	44	08/90-12/93	ENGINE HDZ (TU1M)								
All engines				version Bosch			2.7530/11PHT	3.7526RS				
All engines				version Ducellier			2.7674PHT	3.7702RS	8.3619			
All engines										9.6005 C10		4.8780
1.4	Petrol	55	07/89-12/93	ENGINE KDZ (TU3M)								
All engines				version Bosch			2.7530/11PHT	3.7526RS				
All engines				version Ducellier			2.7674PHT	3.7702RS	8.3619			
All engines										9.6005 C10		4.8780

A10	CONDENSER	**A20**	CONTACT SET	**A40**	DISTRIBUTOR CAP	**A50**	ROTOR	**A70**	PICK-UP
C10	COIL	**C20**	IGNITION MODULE	**C30**	ELECTRONIC IGNITION KIT	**E01**	IGNITION CABLE SET		

The present application list is a brief version. For the detailed information about the possibility of installation on a specific vehicle, please refer to our web-catalogue http://catalogo.facet.eu/

Vehicle	alim.	kW	Date	Engine	FUNCTIONS ON THE VEHICLE A10	A20	A40	A50	A70	C10 - C30	C20	E01
1.6	Petrol	65	07/89-12/93	BDZ (XU5M)								
Engine	Information											
All engines	version Ducellier			2.7674PHT	3.7702RS	8.3619						
All engines	->year 31/12/91						9.6006	C10		4.8748		
All engines	01/01/92 ->						9.6088	C10		4.8674		
1.6	Petrol	68	07/89-12/93	18EM								
Engine	Information											
All engines	version Ducellier			2.7674PHT	3.7702RS	8.3619						
All engines							9.6006	C10		4.8748		
1.6	Petrol	69	07/89-12/93	18EM								
Engine	Information											
All engines	version Bosch			2.7524PHT	3.7561RS							
All engines	01/01/89 ->						9.6006	C10				
All engines									9.4005			
1.6 GTi	Petrol	85	09/89-10/93	--								
Engine	Information											
All engines	->year 31/12/90, version Bosch			2.7524PHT	3.7556RS							
All engines	01/01/91 ->, version Bosch			2.7530/11PHT	3.7526RS							
All engines	01/01/91 ->						9.6005	C10		4.8491		
All engines									9.4005			
All engines	->year 31/12/90, 01/01/88 ->									4.8747		
1.9	Petrol	80	10/90-12/93	DDZ (XU9M)								
Engine	Information											
All engines	version Ducellier			2.7674PHT	3.7702RS	8.3619						
1.9 GTI	Petrol	88	07/89-12/93	DKZ (XU9JAZ)								
Engine	Information											
All engines	version Ducellier			2.7674PHT	3.7702RS							
All engines	01/01/91 ->						9.6005	C10		4.8491		
All engines									9.4005			
1.9 GTI 16V	Petrol	116	08/89-07/90	D6C (XU9J4)								
Engine	Information											
All engines	version Ducellier			2.7677PHT	3.7704							
All engines	Kit, version Ducellier			2.7678PHT								
All engines							9.6006	C10	9.4005			
4007												
2.0	Petrol	108	11/10-03/13	4B11								
Engine	Information											
All engines	x 4, COIL ON PLUG						9.6397	C10				
2.0 4x4	Petrol	108	11/10-03/13	4B11								
Engine	Information											
All engines	x 4, COIL ON PLUG						9.6397	C10				
2.4 16V	Petrol	125	02/07-03/13	SFY (4B12-MMC), SFZ (4B12-MMC)								
Engine	Information											
All engines	x 4, COIL ON PLUG						9.6397	C10				
4008												
1.6	Petrol	84	05/12->	MMC								
Engine	Information											
All engines	Qty: 4						9.6405	C10				

A10	CONDENSER	A20	CONTACT SET	A40	DISTRIBUTOR CAP	A50	ROTOR	A70	PICK-UP
C10	COIL	C20	IGNITION MODULE	C30	ELECTRONIC IGNITION KIT	E01	IGNITION CABLE SET		

The present application list is a brief version. For the detailed information about the possibility of installation on a specific vehicle, please refer to our web-catalogue http://catalogo.facet.eu/

Vehicle	alim.	kW	Date	Engine	FUNCTIONS ON THE VEHICLE A10	A20	A40	A50	A70	C10 - C30	C20	E01
1.6	Petrol	86	05/12->	--, 4A92								
Eng. --	Qty: 4									9.6405 C10		
Eng. 4A92	x 4, COIL ON PLUG									9.6405 C10		
2.0	Petrol	110	05/13->	4B11								
All engines	Qty: 4									9.6397 C10		
All engines	x 4, COIL ON PLUG									9.6397 C10		
2.0 AWC	Petrol	110	05/12->	4B11								
All engines	x 4, COIL ON PLUG									9.6397 C10		
404												
1.6	Petrol	48	04/63-12/71	XC6								
All engines						1.2540		3.7514RS				
1.6	Petrol	54	11/67-12/71	XC6								
All engines						1.2540		3.7514RS				
1.6	Petrol	59	04/63-12/68	XC6								
All engines								3.7514RS				
1.6 GT	Petrol	50	07/71-12/71	XC6								
All engines								3.7514RS				
405 I												
1.4	Petrol	47	01/87-07/92	K5A (TU3)								
All engines	version Bosch						2.7530/11PHT	3.7556RS				
All engines	version Ducellier						2.7674PHT	3.7702RS	8.3619			
All engines										9.6005 C10		4.8780
1.6	Petrol	53	07/87-12/92	B1E (XU51C)								
All engines	version Ducellier						2.7674PHT	3.7702RS	8.3619			
All engines										9.6006 C10	9.4005	4.8748
1.6	Petrol	55	07/87-06/88	B1E (XU51C)								
All engines	version Ducellier						2.7674PHT	3.7702RS	8.3619			
All engines										9.6006 C10	9.4005	4.8748
1.6	Petrol	65	07/87-12/92	BDY (XU5M2Z), BDY (XU5M3Z), BDZ (XU5M)								
Eng. BDZ (XU5M)	version Ducellier						2.7674PHT	3.7702RS				
Eng. BDZ (XU5M)										9.6006 C10	9.4005	4.8748
Eng. BDY (XU5M2Z), BDY (XU5M3Z)												4.8674
1.6	Petrol	66	10/88-12/92	BDZ (XU5M)								
All engines	version Ducellier						2.7674PHT	3.7702RS				
All engines										9.6006 C10	9.4005	4.8748

A10	CONDENSER	A20	CONTACT SET	A40	DISTRIBUTOR CAP	A50	ROTOR	A70	PICK-UP
C10	COIL	C20	IGNITION MODULE	C30	ELECTRONIC IGNITION KIT	E01	IGNITION CABLE SET		

The present application list is a brief version. For the detailed information about the possibility of installation on a specific vehicle, please refer to our web-catalogue http://catalogo.facet.eu/

Vehicle	alim.	kW	Date	Engine	FUNCTIONS ON THE VEHICLE A10	A20	A40	A50	A70	C10 - C30		C20	E01
1.6	Petrol	69	01/87-12/92	ENGINE --, 18EM									
Engine	Information												
All engines	version Bosch						2.7530/11PHT	3.7556RS					
All engines	version Ducellier						2.7674PHT	3.7702RS	8.3619				
All engines										9.6006	C10		4.8748
1.6 4x4	Petrol	65	04/88-07/92	ENGINE BDZ (XU5M)									
Engine	Information												
All engines	version Ducellier						2.7674PHT	3.7702RS					
All engines										9.6006	C10	9.4005	4.8748
1.6 SRi 4x4	Petrol	65	04/88-07/92	ENGINE BDZ (XU5M)									
Engine	Information												
All engines	version Ducellier						2.7674PHT	3.7702RS					
All engines										9.6006	C10	9.4005	4.8748
1.9	Petrol	116	06/87-07/92	ENGINE D6C (XU9J4)									
Engine	Information												
All engines	version Ducellier						2.7677PHT	3.7704					
All engines	Kit, version Ducellier						2.7678PHT						
All engines										9.6006	C10	9.4005	
1.9	Petrol	70	07/87-12/92	ENGINE D2C (XU92C)									
Engine	Information												
All engines	version Bosch						2.7530/11PHT	3.7526RS					
All engines	version Ducellier						2.7674PHT	3.7702RS	8.3619				
All engines										9.6006	C10		4.8748
1.9	Petrol	72	05/88-07/92	ENGINE DFZ (XU9J1)									
Engine	Information												
All engines	version Bosch						2.7524PHT	3.7556RS					
All engines	version Ducellier						2.7667PHT	3.7702RS	8.3617				
All engines												9.4005	4.8747
1.9	Petrol	77	10/88-08/92	ENGINE DFZ (XU9J1)									
Engine	Information												
All engines	version Bosch						2.7524PHT	3.7556RS					
All engines	version Ducellier						2.7667PHT	3.7702RS	8.3617				
All engines												9.4005	4.8747
1.9	Petrol	80	06/87-08/92	ENGINE DDZ (XU9M)									
Engine	Information												
All engines	version Ducellier						2.7674PHT	3.7702RS					
1.9	Petrol	88	06/87-08/92	ENGINE DKZ (XU9JAZ)									
Engine	Information												
All engines	version Ducellier						2.7674PHT	3.7702RS					
All engines	ch. 8819069 ->									9.6005	C10		
All engines												9.4005	
1.9	Petrol	90	01/89-12/92	ENGINE D6A (XU9J2)									
Engine	Information												
All engines	version Bosch						2.7530/11PHT	3.7556RS					
All engines										9.6006	C10		
1.9	Petrol	93	07/87-12/93	ENGINE D6A (XU9J2)									
Engine	Information												
All engines	version Bosch						2.7530/11PHT	3.7556RS					
All engines										9.6006	C10		

A10	CONDENSER	A20	CONTACT SET	A40	DISTRIBUTOR CAP	A50	ROTOR	A70	PICK-UP
C10	COIL	C20	IGNITION MODULE	C30	ELECTRONIC IGNITION KIT	E01	IGNITION CABLE SET		

The present application list is a brief version. For the detailed information about the possibility of installation on a specific vehicle, please refer to our web-catalogue http://catalogo.facet.eu/

Vehicle	alim.	kW	Date	Engine	FUNCTIONS ON THE VEHICLE A10	A20	A40	A50	A70	C10 - C30	C20	E01
1.9 4x4	Petrol	116	06/87-07/92	**ENGINE D6C (XU9J4)**								
All engines		version Ducellier				2.7677PHT	3.7704					
All engines		Kit, version Ducellier				2.7678PHT						
All engines									9.6006	C10	9.4005	
1.9 4x4	Petrol	80	07/88-12/92	**ENGINE DDZ (XU9M)**								
All engines		version Ducellier				2.7674PHT	3.7702RS					
1.9 4x4	Petrol	88	06/87-07/92	**ENGINE DKZ (XU9JAZ)**								
All engines		version Ducellier				2.7674PHT	3.7702RS					
All engines		ch. 8819069 ->							9.6005	C10		
All engines											9.4005	
1.9 Injection	Petrol	77	07/87-12/92	**ENGINE DFZ (XU9J1)**								
All engines		version Bosch				2.7524PHT	3.7556RS					
All engines		version Ducellier				2.7667PHT	3.7702RS	8.3617				
All engines											9.4005	4.8747
1.9 Sport MI-16	Petrol	108	06/87-07/92	**ENGINE DFW (XU9J4Z)**								
All engines		version Ducellier				2.7677PHT	3.7704					
All engines		Kit, version Ducellier				2.7678PHT						
All engines									9.6006	C10	9.4005	
1.9 Sport MI-16	Petrol	116	07/87-11/92	**ENGINE D6C (XU9J4)**								
All engines		version Ducellier				2.7677PHT	3.7704					
All engines		Kit, version Ducellier				2.7678PHT						
All engines									9.6006	C10	9.4005	
1.9 SPort MI-16 4x4	Petrol	108	06/87-07/92	**ENGINE DFW (XU9J4Z)**								
All engines		version Ducellier				2.7677PHT	3.7704					
All engines		Kit, version Ducellier				2.7678PHT						
All engines									9.6006	C10	9.4005	
1.9 Trazione integrale	Petrol	116	06/87-07/92	**ENGINE D6C (XU9J4)**								
All engines		version Ducellier				2.7677PHT	3.7704					
All engines		Kit, version Ducellier				2.7678PHT						
All engines									9.6006	C10	9.4005	
1.9 Trazione integrale	Petrol	77	09/88-07/92	**ENGINE DFZ (XU9J1)**								
All engines		version Bosch				2.7524PHT	3.7556RS					
All engines		version Ducellier				2.7667PHT	3.7702RS	8.3617				
All engines											9.4005	4.8747
405 II												
1.6	Petrol	65	08/92-10/96	**ENGINE BDY (XU5M2Z), BDY (XU5M3Z), BDZ (XU5M), BFZ (XU5JP)**								
All engines										9.6088	C10	4.8674

A10	CONDENSER	**A20**	CONTACT SET	**A40**	DISTRIBUTOR CAP	**A50**	ROTOR	**A70**	PICK-UP
C10	COIL	**C20**	IGNITION MODULE	**C30**	ELECTRONIC IGNITION KIT	**E01**	IGNITION CABLE SET		

The present application list is a brief version. For the detailed information about the possibility of installation on a specific vehicle, please refer to our web-catalogue http://catalogo.facet.eu/

Vehicle	alim.	kW	Date	Engine	FUNCTIONS ON THE VEHICLE							
					A10	A20	A40	A50	A70	C10 - C30	C20	E01
1.6	Petrol	66	08/92-05/97	**ENGINE** 18EM, BFZ (XU5JP)								
Eng. 18EM	version Bosch						2.7530/11PHT	3.7556RS				
Eng. 18EM	version Ducellier						2.7674PHT	3.7702RS	8.3619			
Eng. 18EM										9.6006 C10		4.8748
Eng. BFZ (XU5JP)										9.6088 C10		4.8674
1.6	Petrol	68	08/92-08/94	**ENGINE** 18EM, BDZ (XU5M), BFZ (XU5JP)								
Eng. 18EM	version Bosch						2.7530/11PHT	3.7556RS				
Eng. 18EM	version Ducellier						2.7674PHT	3.7702RS	8.3619			
Eng. 18EM										9.6006 C10		4.8748
Eng. BDZ (XU5M), BFZ (XU5JP)										9.6088 C10		4.8674
1.8	Petrol	74	08/92-10/96	**ENGINE** LFZ (XU7JP)								
All engines										9.6088 C10		4.8674
2.0	Petrol	89	08/92-10/96	**ENGINE** RFX (XU10J2)								
All engines										9.6088 C10		4.8494
2.0 4x4	Petrol	89	08/92-10/96	**ENGINE** RFX (XU10J2)								
All engines										9.6088 C10		4.8494
2.0 X4	Petrol	89	08/92-10/95	**ENGINE** RFX (XU10J2)								
All engines										9.6088 C10		4.8494
406												
1.6	Petrol	65	11/95-05/04	**ENGINE** BFZ (XU5JP)								
All engines	x 1, D.I.S., connector type, saw teeth									9.6088 C10		
All engines												4.8674
1.8	Petrol	66	05/97-10/04	**ENGINE** LFX (XU7JB)								
All engines	x 1, D.I.S., connector type, saw teeth									9.6088 C10		
All engines												4.8674
1.8	Petrol	74	10/96-03/99	**ENGINE** L6A (XU7JP), LFZ (XU7JP)								
Eng. LFZ (XU7JP)										9.6088 C10		4.8674
All engines	x 1, D.I.S., connector type, saw teeth									9.6088 C10		
1.8 16V	Petrol	85	10/00-10/04	**ENGINE** 6FZ (EW7J4)								
All engines	x 4, COIL ON PLUG									9.6308 C10		
1.8 BiFuel	Petrol/ Liquified Petro-leum Gas (LPG)	85	09/00-05/04	**ENGINE** 6FZ (EW7J4)								
All engines	x 4, COIL ON PLUG									9.6308 C10		

A10	CONDENSER	**A20**	CONTACT SET	**A40**	DISTRIBUTOR CAP	**A50**	ROTOR	**A70**	PICK-UP
C10	COIL	**C20**	IGNITION MODULE	**C30**	ELECTRONIC IGNITION KIT	**E01**	IGNITION CABLE SET		

The present application list is a brief version. For the detailed information about the possibility of installation on a specific vehicle, please refer to our web-catalogue http://catalogo.facet.eu/

Vehicle	alim.	kW	Date	Engine	FUNCTIONS ON THE VEHICLE A10	A20	A40	A50	A70	C10 - C30	C20	E01
2.0 16V	Petrol	100	08/00-12/04	**RFN (EW10J4), RFV (XU10J4R)**								
Engine: All engines	Information: x 4, COIL ON PLUG									9.6308 C10		
2.0 16V	Petrol	99	01/99-10/00	**RFR (DEW10J4), RFR (EW10J4)**								
Engine: Eng. RFR (DEW10J4)	Information: incl. spark plug connector									9.6308 C10		
Engine: Eng. RFR (EW10J4)	Information: x 4, COIL ON PLUG									9.6308 C10		
2.0 Turbo	Petrol	108	04/96-10/04	**RGX (XU10J2TE)**								
Engine: All engines	Information: x 1, D.I.S., connector type, saw teeth									9.6088 C10		
Engine: All engines	Information:											4.8494
2.2	Petrol	116	07/00-12/04	**3FZ (EW12J4)**								
Engine: All engines	Information: x 4, COIL ON PLUG									9.6409 C10		
407												
1.8	Petrol	85	03/04-07/05	**6FZ (EW7J4)**								
Engine: All engines	Information: x 4, COIL ON PLUG									9.6308 C10		
1.8 16V	Petrol	92	08/05-12/10	**6FY (EW7A)**								
Engine: All engines	Information: x 4, COIL ON PLUG									9.6308 C10		
2.0	Petrol	100	03/04-07/05	**RFN (EW10J4)**								
Engine: All engines	Information: x 4, COIL ON PLUG									9.6308 C10		
2.0 16V	Petrol	103	08/05-12/10	**RFJ (EW10A)**								
Engine: All engines	Information: x 1, COIL ON PLUG									9.6376 C10		
2.0 Bioflex	Petrol/ Ethanol	103	09/07-02/11	**RFJ (EW10A)**								
Engine: All engines	Information: x 1, COIL ON PLUG									9.6376 C10		
2.0 Flex	Petrol/ Ethanol	103	10/05-02/11	**RFJ (EW10A)**								
Engine: All engines	Information: x 1, COIL ON PLUG									9.6376 C10		
2.2	Petrol	116	03/04-10/06	**3FZ (EW12J4)**								
Engine: All engines	Information: x 4, COIL ON PLUG									9.6409 C10		
2.2 16V	Petrol	120	08/05->	**3FY (EW12J4)**								
Engine: All engines	Information: x 4, COIL ON PLUG									9.6409 C10		
5008 I												
1.2	Petrol	96	01/15-03/17	**HNY (EB2DTS)**								
Engine: All engines	Information: x 3, COIL ON PLUG									9.6520 C10		

A10	CONDENSER	**A20**	CONTACT SET	**A40**	DISTRIBUTOR CAP	**A50**	ROTOR	**A70**	PICK-UP
C10	COIL	**C20**	IGNITION MODULE	**C30**	ELECTRONIC IGNITION KIT	**E01**	IGNITION CABLE SET		

The present application list is a brief version. For the detailed information about the possibility of installation on a specific vehicle, please refer to our web-catalogue http://catalogo.facet.eu/

PEUGEOT

Vehicle	alim.	kW	Date	Engine	FUNCTIONS ON THE VEHICLE: A10	A20	A40	A50	A70	C10 - C30	C20	E01
1.6 16V	Petrol	115	09/09-03/17	**5FV (EP6CDT)**								
Engine: All engines	Information: x 4, COIL ON PLUG									9.6375 C10		
1.6 16V	Petrol	88	09/09-03/17	**5FS (EP6C), 5FW (EP6), EP6**								
Engine: All engines	Information: x 4, COIL ON PLUG									9.6375 C10		
1.6 THP 150	Petrol	110	02/12-03/17	**5FX (EP6DT)**								
Engine: All engines	Information: x 4, COIL ON PLUG									9.6375 C10		
1.6 THP 163	Petrol	120	02/12-03/17	**5GZ (EP6FDT)**								
Engine: All engines	Information: x 4, COIL ON PLUG									9.6375 C10		
1.6 THP 165	Petrol	121	02/12-03/17	**5GZ (EP6FDT)**								
Engine: All engines	Information: x 4, COIL ON PLUG									9.6375 C10		
5008 II												
1.6	Petrol	110	07/18->	**5GX (EP6FDTMD)**								
Engine: All engines	Information: x 4, COIL ON PLUG									9.6375 C10		
1.6 PureTech 180	Petrol	133	07/18->	**5GF (EP6FADTXD)**								
Engine: All engines	Information: x 4, COIL ON PLUG									9.6375 C10		
1.6 THP 165	Petrol	121	12/16->	**5GY (EP6FDTM), 5GZ (EP6FDT)**								
Engine: All engines	Information: x 4, COIL ON PLUG									9.6375 C10		
504												
1.8	Petrol	54	04/71-07/86	**XM7**								
Engine: All engines	Information:					1.2540, 1.3691/11U		3.7514RS				
1.8	Petrol	55	09/79-08/82	**XM7**								
Engine: All engines	Information: version Ducellier						2.7658PHT	3.7691				
1.8	Petrol	58	01/71-06/83	**XM7**								
Engine: All engines	Information:					1.2540, 1.3691/11U		3.7514RS				
Engine: All engines	Information: version Ducellier						2.7658PHT	3.7691				
1.8 Injection	Petrol	71	07/68-02/71	**KF5, KF6**								
Engine: All engines	Information: version Ducellier				0.0323	1.3655	2.7654PHT	3.7691				
2.0	Petrol	68	04/71-07/86	**XN1**								
Engine: All engines	Information:					1.2540		3.7514RS				
2.0	Petrol	71	03/71-06/86	**106 (XN1)**								
Engine: All engines	Information:					1.2540		3.7514RS				

A10	CONDENSER	A20	CONTACT SET	A40	DISTRIBUTOR CAP	A50	ROTOR	A70	PICK-UP
C10	COIL	C20	IGNITION MODULE	C30	ELECTRONIC IGNITION KIT	E01	IGNITION CABLE SET		

The present application list is a brief version. For the detailed information about the possibility of installation on a specific vehicle, please refer to our web-catalogue http://catalogo.facet.eu/

Vehicle	alim.	kW	Date	Engine	FUNCTIONS ON THE VEHICLE A10	A20	A40	A50	A70	C10 - C30	C20	E01
2.0	Petrol	78	08/82-08/84	**ENGINE 107 (XN2)**								
Engine	Information				A10	A20	A40	A50	A70	C10 - C30	C20	E01
All engines						1.2540						
2.0 TI	Petrol	78	01/71-06/83	**ENGINE 107 (XN2)**								
Engine	Information				A10	A20	A40	A50	A70	C10 - C30	C20	E01
All engines						1.2540						
505												
1.8	Petrol	55	06/81-10/85	**ENGINE 105 (XM7)**								
Engine	Information				A10	A20	A40	A50	A70	C10 - C30	C20	E01
All engines	version Ducellier				0.0334	1.3691/5	2.7654PHT	3.7691				
All engines						1.2540		3.7514RS		9.6001D C10		
1.8	Petrol	60	01/82-10/85	**ENGINE 105 (XM7)**								
Engine	Information				A10	A20	A40	A50	A70	C10 - C30	C20	E01
All engines	version Ducellier				0.0334	1.3691/5	2.7654PHT	3.7691				
All engines						1.2540				9.6001D C10		
1.8	Petrol	62	09/85-10/86	**ENGINE 105C (XM7A)**								
Engine	Information				A10	A20	A40	A50	A70	C10 - C30	C20	E01
All engines	version Ducellier				0.0334		2.7654PHT	3.7691				
2.0	Petrol	60	04/82-11/87	**ENGINE --**								
Engine	Information				A10	A20	A40	A50	A70	C10 - C30	C20	E01
All engines						1.2540						
2.0	Petrol	69	08/83-12/85	**ENGINE 106 (XN1)**								
Engine	Information				A10	A20	A40	A50	A70	C10 - C30	C20	E01
All engines						1.2540		3.7514RS				
2.0	Petrol	71	11/80-12/85	**ENGINE 106 (XN1)**								
Engine	Information				A10	A20	A40	A50	A70	C10 - C30	C20	E01
All engines						1.2540		3.7514RS				
2.0	Petrol	72	09/85-09/95	**ENGINE 106E (XN1A)**								
Engine	Information				A10	A20	A40	A50	A70	C10 - C30	C20	E01
All engines	version Bosch						2.7479PHT	3.7555RS				
All engines	version Ducellier						2.7654PHT	3.7694				
All engines	version Marelli						2.8198PHT	3.8247RS	8.4978M			
All engines											9.4005	
2.0 TI, STI	Petrol	81	08/79-10/86	**ENGINE 829 (ZEJ)**								
Engine	Information				A10	A20	A40	A50	A70	C10 - C30	C20	E01
All engines	version Bosch						2.7479PHT	3.7556RS	8.2653			
All engines	version Ducellier						2.7659PHT	3.7691				
All engines	->year 31/12/85										9.4005	
2.2	Petrol	84	01/86-12/93	**ENGINE 851X (ZDJL)**								
Engine	Information				A10	A20	A40	A50	A70	C10 - C30	C20	E01
All engines	version Bosch						2.7479PHT	3.7555RS				
All engines	version Bosch, distr. num. 0 237 035 001								8.2659			
All engines											9.4005	
2.2	Petrol	85	05/81-10/84	**ENGINE 851 (ZDJ)**								
Engine	Information				A10	A20	A40	A50	A70	C10 - C30	C20	E01
All engines	version Bosch						2.7479PHT	3.7555RS				
All engines	version Bosch, distr. num. 0 237 035 001								8.2659			
All engines											9.4005	

A10	CONDENSER	**A20**	CONTACT SET	**A40**	DISTRIBUTOR CAP	**A50**	ROTOR	**A70**	PICK-UP
C10	COIL	**C20**	IGNITION MODULE	**C30**	ELECTRONIC IGNITION KIT	**E01**	IGNITION CABLE SET		

The present application list is a brief version. For the detailed information about the possibility of installation on a specific vehicle, please refer to our web-catalogue http://catalogo.facet.eu/

Vehicle	alim.	kW	Date	Engine	FUNCTIONS ON THE VEHICLE: A10	A20	A40	A50	A70	C10 - C30	C20	E01
2.2 GTI	Petrol	90	08/83-12/93	851B (ZDJL)								

Engine	Information	A10	A20	A40	A50	A70	C10 - C30	C20	E01
All engines	version Bosch			2.7479PHT	3.7555RS				
All engines	version Bosch, distr. num. 0 237 035 001					8.2659			
All engines								9.4005	

508 I

1.6	Petrol	121	02/12-12/18	5GZ (EP6FDT)

Engine	Information	A10	A20	A40	A50	A70	C10 - C30	C20	E01
All engines	x 4, COIL ON PLUG						9.6375 C10		

1.6 THP	Petrol	110	11/10-12/18	5FE (EP6CDTM), 5FN (EP6CDT)

Engine	Information	A10	A20	A40	A50	A70	C10 - C30	C20	E01
All engines	x 4, COIL ON PLUG						9.6375 C10		

1.6 THP	Petrol	115	11/10-12/18	5FV (EP6CDT)

Engine	Information	A10	A20	A40	A50	A70	C10 - C30	C20	E01
All engines	x 4, COIL ON PLUG						9.6375 C10		

1.6 THP	Petrol	120	05/11->	5GZ (EP6FDT), EP6CDT M

Engine	Information	A10	A20	A40	A50	A70	C10 - C30	C20	E01
Eng. 5GZ (EP6FDT)	x 4, COIL ON PLUG						9.6375 C10		
Eng. EP6CDT M	Qty: 4						9.6375 C10		

1.6 THP	Petrol	121	09/11-12/18	5GZ (EP6FDT)

Engine	Information	A10	A20	A40	A50	A70	C10 - C30	C20	E01
All engines	x 4, COIL ON PLUG						9.6375 C10		

1.6 VTi	Petrol	85	11/10-12/18	5FH (EP6C)

Engine	Information	A10	A20	A40	A50	A70	C10 - C30	C20	E01
All engines	x 4, COIL ON PLUG						9.6375 C10		

1.6 VTi	Petrol	88	11/10-12/18	5FS (EP6C)

Engine	Information	A10	A20	A40	A50	A70	C10 - C30	C20	E01
All engines	x 4, COIL ON PLUG						9.6375 C10		

508 II

1.6 PureTech 180	Petrol	133	09/18->	5GF (EP6FADTXD), GFR (EP6FADTXD)

Engine	Information	A10	A20	A40	A50	A70	C10 - C30	C20	E01
All engines	x 4, COIL ON PLUG						9.6375 C10		

1.6 PureTech 225	Petrol	165	09/18->	5GG (EP6FADTX), GCR (EP6FADTX)

Engine	Information	A10	A20	A40	A50	A70	C10 - C30	C20	E01
All engines	x 4, COIL ON PLUG						9.6375 C10		

1.6 THP 150	Petrol	110	09/18->	5GX (EP6FDTMD)

Engine	Information	A10	A20	A40	A50	A70	C10 - C30	C20	E01
All engines	x 4, COIL ON PLUG						9.6375 C10		

1.6 THP 165	Petrol	121	09/18->	5GY (EP6FDTM)

Engine	Information	A10	A20	A40	A50	A70	C10 - C30	C20	E01
All engines	x 4, COIL ON PLUG						9.6375 C10		

Hybrid 224	Petrol/ Electric	133	08/19->	5GQ (EP6FADTXHPD)

Engine	Information	A10	A20	A40	A50	A70	C10 - C30	C20	E01
All engines	x 4, COIL ON PLUG						9.6375 C10		

A10	CONDENSER	A20	CONTACT SET	A40	DISTRIBUTOR CAP	A50	ROTOR	A70	PICK-UP
C10	COIL	C20	IGNITION MODULE	C30	ELECTRONIC IGNITION KIT	E01	IGNITION CABLE SET		

The present application list is a brief version. For the detailed information about the possibility of installation on a specific vehicle, please refer to our web-catalogue http://catalogo.facet.eu/

Vehicle	alim.	kW	Date	Engine	FUNCTIONS ON THE VEHICLE A10	A20	A40	A50	A70	C10 - C30	C20	E01
Hybrid 224	Petrol/ Electric	165	08/19->	ENGINE 5GQ (EP6FADTXHPD)								
Engine: All engines	Information: x 4, COIL ON PLUG									9.6375 C10		
Hybrid 225	Petrol/ Electric	133	08/19->	ENGINE 5GQ (EP6FADTXHPD)								
Engine: All engines	Information: x 4, COIL ON PLUG									9.6375 C10		
Hybrid 225	Petrol/ Electric	165	08/19->	ENGINE 5GQ (EP6FADTXHPD)								
Engine: All engines	Information: x 4, COIL ON PLUG									9.6375 C10		
604												
2.0 i	Petrol	0	01/85-12/86	ENGINE XN6								
Engine: All engines	Information: version Ducellier						2.7679PHT	3.7694				
2.7 SL	Petrol	100	08/77-05/83	ENGINE 112 (ZM)								
Engine: All engines	Information: version Bosch							3.7549RS				
2.7 TI, STI	Petrol	106	08/77-05/83	ENGINE 140 (ZMJ)								
Engine: All engines	Information: version Bosch							3.7549RS				
605												
2.0	Petrol	79	02/90-09/99	ENGINE --								
Engine: All engines	Information: version Ducellier						2.7674PHT	3.7702RS				
2.0	Petrol	84	06/89-09/99	ENGINE R5A (XU102C)								
Engine: All engines	Information: version Ducellier						2.7674PHT	3.7702RS	8.3619			
2.0	Petrol	89	06/89-09/99	ENGINE RFZ (XU10J2Z)								
Engine: All engines	Information:									9.6088 C10		4.8494
2.0 Turbo	Petrol	104	07/92-09/99	ENGINE RGY (XU10J2TE)								
Engine: All engines	Information:									9.6088 C10		4.8494
2.0 Turbo	Petrol	108	07/91-09/99	ENGINE RGX (XU10J2TE)								
Engine: All engines	Information:									9.6088 C10		4.8494
3.0	Petrol	123	08/89-09/99	ENGINE UFZ (ZPJ)								
Engine: All engines	Information: version Bosch						2.7530/22PHT	3.7573/19RS				
All engines											9.4034	
3.0	Petrol	147	08/89-06/94	ENGINE UKZ (ZPJ4/Z)								
Engine: All engines	Information: version Bosch						2.7530/22PHT	3.7573/19RS				
All engines											9.4034	

A10	CONDENSER	**A20**	CONTACT SET	**A40**	DISTRIBUTOR CAP	**A50**	ROTOR	**A70**	PICK-UP
C10	COIL	**C20**	IGNITION MODULE	**C30**	ELECTRONIC IGNITION KIT	**E01**	IGNITION CABLE SET		

The present application list is a brief version. For the detailed information about the possibility of installation on a specific vehicle, please refer to our web-catalogue http://catalogo.facet.eu/

PEUGEOT

Vehicle	alim.	kW	Date	Engine	FUNCTIONS ON THE VEHICLE: A10	A20	A40	A50	A70	C10 - C30	C20	E01
3.0 SV 24	Petrol	147	08/89-09/99	**UKZ (ZPJ4/Z)**								
All engines	version Bosch						2.7530/22PHT	3.7573/19RS				
All engines											9.4034	
607												
2.0	Petrol	100	02/00-08/05	**RFN (EW10J4)**								
All engines	x 4, COIL ON PLUG									9.6308 C10		
2.2 16V	Petrol	116	02/00-08/05	**3FZ (EW12J4)**								
All engines	euro 4 (D4), x 4, COIL ON PLUG									9.6376 C10		
All engines	euro 3, x 4, COIL ON PLUG									9.6409 C10		
2.2 16V	Petrol	120	09/05-06/10	**3FY (EW12J4)**								
All engines	euro 4 (D4), x 4, COIL ON PLUG									9.6376 C10		
All engines	euro 3, x 4, COIL ON PLUG									9.6409 C10		
806												
1.8	Petrol	73	07/95-08/02	**LFW (XU7JP)**								
All engines	x 1, D.I.S., connector type, saw teeth									9.6088 C10		
All engines												4.8674
2.0	Petrol	100	05/00-02/03	**RFN (EW10J4)**								
All engines	x 4, COIL ON PLUG									9.6308 C10		
2.0	Petrol	108	02/97-05/00	**RGX (XU10J2TE)**								
All engines	x 1, D.I.S., connector type, saw teeth									9.6088 C10		
2.0	Petrol	89	06/94-08/02	**RFU (XU10J2)**								
All engines	x 1, D.I.S., connector type, saw teeth									9.6088 C10		
All engines												4.8494
2.0 16V	Petrol	100	09/00-08/02	**RFN (EW10J4)**								
All engines	x 4, COIL ON PLUG									9.6308 C10		
2.0 Turbo	Petrol	108	06/94-08/02	**RGX (XU10J2TE)**								
All engines	x 1, D.I.S., connector type, saw teeth									9.6088 C10		
All engines												4.8494
807												
2.0	Petrol	100	06/02->	**RFN (EW10J4)**								
All engines	x 4, COIL ON PLUG									9.6308 C10		
2.0 16V	Petrol	103	09/05->	**RFJ (EW10A)**								
All engines	x 1, COIL ON PLUG									9.6376 C10		
2.2	Petrol	116	06/02->	**3FZ (EW12J4)**								
All engines	x 4, COIL ON PLUG									9.6409 C10		

A10	CONDENSER	**A20**	CONTACT SET	**A40**	DISTRIBUTOR CAP	**A50**	ROTOR	**A70**	PICK-UP
C10	COIL	**C20**	IGNITION MODULE	**C30**	ELECTRONIC IGNITION KIT	**E01**	IGNITION CABLE SET		

The present application list is a brief version. For the detailed information about the possibility of installation on a specific vehicle, please refer to our web-catalogue http://catalogo.facet.eu/

Vehicle	alim.	kW	Date	Engine	FUNCTIONS ON THE VEHICLE A10	A20	A40	A50	A70	C10 - C30	C20	E01
BIPPER												
1.4	Petrol	54	02/08->	KFV (TU3A)						9.6305 C10		
BIPPER TEPEE												
1.4	Petrol	54	04/08->	KFV (TU3A)						9.6305 C10		
BOXER I												
2.0	Petrol	81	12/01->	RFL (XU10J2U)						9.6088 C10		
												4.8674
2.0 4x4	Petrol	80	03/96-09/98	--						9.6088 C10		4.8674
2.0 i	Petrol	80	03/94-04/02	RFW (XU10J2)						9.6088 C10		4.8674
2.0 i 4x4	Petrol	80	08/96-04/02	RFW (XU10J2)						9.6088 C10		4.8674
EXPERT I												
1.6	Petrol	58	02/96-09/00	222A2 (1580 SPI)						9.6068 C10		
												4.8655
1.8	Petrol	74	10/96-09/00	LFZ (XU7JP)						9.6088 C10		
												4.8674
2.0	Petrol	100	07/00-12/06	RFN (EW10J4)						9.6308 C10		
EXPERT II												
2.0 16V	Petrol	103	01/07->	RFH (EW10A), RFJ (EW10A)						9.6376 C10		
EXPERT II TEPEE												
2.0 16V	Petrol	103	01/07-03/16	RFH (EW10A), RFJ (EW10A)						9.6376 C10		
J5												
1.8	Petrol	51	01/83-11/88	169B (XM7T)			2.7654PHT	3.7694				
											9.4005	

Engine	Information
All engines	x 4, COIL ON PLUG
All engines	
All engines	x 1, D.I.S., connector type, saw teeth
All engines	version Ducellier

A10	CONDENSER	A20	CONTACT SET	A40	DISTRIBUTOR CAP	A50	ROTOR	A70	PICK-UP
C10	COIL	C20	IGNITION MODULE	C30	ELECTRONIC IGNITION KIT	E01	IGNITION CABLE SET		

The present application list is a brief version. For the detailed information about the possibility of installation on a specific vehicle, please refer to our web-catalogue http://catalogo.facet.eu/

Vehicle	alim.	kW	Date	Engine	FUNCTIONS ON THE VEHICLE A10	A20	A40	A50	A70	C10 - C30	C20	E01

J9

				ENGINE
1.6	Petrol	44	03/80-06/87	XC7P

Engine	Information	A10	A20	A40	A50	A70	C10 - C30	C20	E01
All engines	version Ducellier	0.0334	1.3691/5	2.7654PHT	3.7691				

				ENGINE
2.0	Petrol	57	03/80-06/87	XN1P

Engine	Information	A10	A20	A40	A50	A70	C10 - C30	C20	E01
All engines	version Ducellier			2.7654PHT	3.7694				
All engines								9.4005	

PARTNER I

				ENGINE
1.1	Petrol	44	06/96->	HDY (TU1M), HDZ (TU1M), HFX (TU1JP)

Engine	Information	A10	A20	A40	A50	A70	C10 - C30	C20	E01
Eng. HDY (TU1M), HDZ (TU1M)							9.6088 C10		4.9374
Eng. HDZ (TU1M), HFX (TU1JP)	x 1, COIL ON PLUG						9.6305 C10		

				ENGINE
1.4	Petrol	54	11/02-10/06	KFW (TU3JP)

Engine	Information	A10	A20	A40	A50	A70	C10 - C30	C20	E01
All engines	x 1, COIL ON PLUG						9.6305 C10		

				ENGINE
1.4	Petrol	55	06/96-12/15	KFX (TU3JP), TU32

Engine	Information	A10	A20	A40	A50	A70	C10 - C30	C20	E01
Eng. TU32	x 1, DISTRIBUTOR, connector type SAE						9.6055 C10		
Eng. KFX (TU3JP)	->year 31/05/98						9.6088 C10		
All engines	->year 31/05/98								4.9374

				ENGINE
1.4 BiFuel	Petrol/ Com-pressed Natural Gas (CNG)	55	04/03-10/06	KFW (TU3JP)

Engine	Information	A10	A20	A40	A50	A70	C10 - C30	C20	E01
All engines	x 1, COIL ON PLUG						9.6305 C10		

				ENGINE
1.6	Petrol	80	09/00->	N6A (TU5JP4), NFU (TU5JP4)

Engine	Information	A10	A20	A40	A50	A70	C10 - C30	C20	E01
Eng. N6A (TU5JP4)							9.6307 C10		
Eng. NFU (TU5JP4)	x 1, COIL ON PLUG						9.6307 C10		

				ENGINE
1.6 16V	Petrol	80	07/01-03/08	NFU (TU5JP4)

Engine	Information	A10	A20	A40	A50	A70	C10 - C30	C20	E01
All engines	x 1, COIL ON PLUG						9.6307 C10		

				ENGINE
1.6 Bioflex	Petrol/ Ethanol	80	09/00-10/02	NFU (TU5JP4)

Engine	Information	A10	A20	A40	A50	A70	C10 - C30	C20	E01
All engines	x 1, COIL ON PLUG						9.6307 C10		

				ENGINE
1.6 Flexfuel	Petrol/ Ethanol	80	09/00-10/02	NFU (TU5JP4)

Engine	Information	A10	A20	A40	A50	A70	C10 - C30	C20	E01
All engines	x 1, COIL ON PLUG						9.6307 C10		

				ENGINE
1.8	Petrol	66	03/97-12/02	LFX (XU7JB)

Engine	Information	A10	A20	A40	A50	A70	C10 - C30	C20	E01
All engines							9.6088 C10		4.8674
All engines	x 1, D.I.S., connector type, saw teeth						9.6088 C10		

A10	CONDENSER	A20	CONTACT SET	A40	DISTRIBUTOR CAP	A50	ROTOR	A70	PICK-UP
C10	COIL	C20	IGNITION MODULE	C30	ELECTRONIC IGNITION KIT	E01	IGNITION CABLE SET		

The present application list is a brief version. For the detailed information about the possibility of installation on a specific vehicle, please refer to our web-catalogue http://catalogo.facet.eu/

Vehicle	alim.	kW	Date	Engine	FUNCTIONS ON THE VEHICLE							
					A10	A20	A40	A50	A70	C10 - C30	C20	E01
PARTNER II												
1.2 THP	Petrol	81	02/16->	ENGINE: HNZ (EB2DT)								
Engine: All engines	Information: x 3, COIL ON PLUG									9.6520 C10		
1.6	Petrol	66	04/08->	ENGINE: NFR (TU5JP4B)								
Engine: All engines	Information: x 1, COIL ON PLUG									9.6307 C10		
1.6	Petrol	72	11/10->	ENGINE: 5FK (EP6CB)								
Engine: All engines	Information: x 4, COIL ON PLUG									9.6375 C10		
1.6	Petrol	80	04/08->	ENGINE: NFU (TU5JP4)								
Engine: All engines	Information: x 1, COIL ON PLUG									9.6307 C10		
1.6	Petrol	88	04/10->	ENGINE: 5FS (EP6C)								
Engine: All engines	Information: x 4, COIL ON PLUG									9.6375 C10		
PARTNER II TEPEE												
1.2 THP	Petrol	81	02/16->	ENGINE: HNV (EB2DTM), HNZ (EB2DT)								
Engine: All engines	Information: x 3, COIL ON PLUG									9.6520 C10		
1.6 VTi	Petrol	66	04/08->	ENGINE: NFR (TU5JP4B)								
Engine: All engines	Information: x 1, COIL ON PLUG									9.6307 C10		
1.6 VTi	Petrol	72	08/10->	ENGINE: 5FK (EP6CB)								
Engine: All engines	Information: x 4, COIL ON PLUG									9.6375 C10		
1.6 VTi	Petrol	80	04/08->	ENGINE: NFU (TU5JP4)								
Engine: All engines	Information: x 1, COIL ON PLUG									9.6307 C10		
1.6 VTi	Petrol	81	09/08->	ENGINE: NFU (TU5JP4)								
Engine: All engines	Information:									9.6307 C10		
1.6 VTi	Petrol	88	09/09-04/16	ENGINE: 5FS (EP6C)								
Engine: All engines	Information: x 4, COIL ON PLUG									9.6375 C10		
PARTNER ORIGIN												
1.4	Petrol	55	07/08-12/15	ENGINE: KFW (TU3JP)								
Engine: All engines	Information: x 1, COIL ON PLUG									9.6305 C10		
1.6	Petrol	81	09/11-12/15	ENGINE: NFU (TU5JP4)								
Engine: All engines	Information: x 1, COIL ON PLUG									9.6307 C10		
1.6 16V	Petrol	81	09/11-12/13	ENGINE: NFU (TU5JP4)								
Engine: All engines	Information: x 1, COIL ON PLUG									9.6307 C10		

A10	CONDENSER	A20	CONTACT SET	A40	DISTRIBUTOR CAP	A50	ROTOR	A70	PICK-UP
C10	COIL	C20	IGNITION MODULE	C30	ELECTRONIC IGNITION KIT	E01	IGNITION CABLE SET		

The present application list is a brief version. For the detailed information about the possibility of installation on a specific vehicle, please refer to our web-catalogue http://catalogo.facet.eu/

Vehicle	alim.	kW	Date	Engine	FUNCTIONS ON THE VEHICLE							
					A10	A20	A40	A50	A70	C10 - C30	C20	E01
RANCH												
				ENGINE								
1.1	Petrol	44	06/96->	HDY (TU1M), HDZ (TU1M), HFX (TU1JP)								
Engine	Information											
Eng. HDY (TU1M), HDZ (TU1M)										9.6088 C10		4.9374
Eng. HFX (TU1JP)										9.6305 C10		
				ENGINE								
1.4	Petrol	55	06/96->	KFW (TU3JP), KFX (TU3JP)								
Engine	Information											
Eng. KFX (TU3JP)	->year 31/05/98									9.6088 C10		4.9374
Eng. KFX (TU3JP)	01/06/98 ->									9.6303 C10		
Eng. KFW (TU3JP)										9.6305 C10		
				ENGINE								
1.4 BiFuel	Petrol	55	04/03->	KFW (TU3JP)								
Engine	Information											
All engines										9.6305 C10		
				ENGINE								
1.6 16V	Petrol	80	07/01->	N6A (TU5JP4), NFU (TU5JP4)								
Engine	Information											
All engines										9.6307 C10		
				ENGINE								
1.8	Petrol	66	05/97->	LFX (XU7JB)								
Engine	Information											
All engines										9.6088 C10		4.8674
RCZ												
				ENGINE								
1.6 16V	Petrol	115	03/10-12/15	5FV (EP6CDT)								
Engine	Information											
All engines	x 4, COIL ON PLUG									9.6375 C10		
				ENGINE								
1.6 16V	Petrol	121	01/11-12/15	5FM (EP6CDTM)								
Engine	Information											
All engines	Qty: 4									9.6375 C10		
				ENGINE								
1.6 16V	Petrol	147	06/10-12/15	EP6CDTX								
Engine	Information											
All engines	x 4, COIL ON PLUG									9.6375 C10		
				ENGINE								
1.6 16V	Petrol	150	06/10-12/15	EP6CDTX								
Engine	Information											
All engines	Qty: 4									9.6375 C10		
				ENGINE								
1.6 THP 150	Petrol	110	03/11-12/15	5FE (EP6CDTMD)								
Engine	Information											
All engines	x 4, COIL ON PLUG									9.6375 C10		
				ENGINE								
1.6 THP 270	Petrol	199	06/13-12/15	5FG (EP6CDTR)								
Engine	Information											
All engines	x 4, COIL ON PLUG									9.6375 C10		

A10	CONDENSER	A20	CONTACT SET	A40	DISTRIBUTOR CAP	A50	ROTOR	A70	PICK-UP
C10	COIL	C20	IGNITION MODULE	C30	ELECTRONIC IGNITION KIT	E01	IGNITION CABLE SET		

The present application list is a brief version. For the detailed information about the possibility of installation on a specific vehicle, please refer to our web-catalogue http://catalogo.facet.eu/

Vehicle	alim.	kW	Date	Engine	FUNCTIONS ON THE VEHICLE							
					A10	A20	A40	A50	A70	C10 - C30	C20	E01
PORTER												
				ENGINE								
1.0	Petrol	33	02/93-06/94	CB41								

Engine	Information	A10	A20	A40	A50	A70	C10 - C30	C20	E01
All engines	version Denso				3.7630				

A10	CONDENSER	**A20**	CONTACT SET	**A40**	DISTRIBUTOR CAP	**A50**	ROTOR	**A70**	PICK-UP
C10	COIL	**C20**	IGNITION MODULE	**C30**	ELECTRONIC IGNITION KIT	**E01**	IGNITION CABLE SET		

The present application list is a brief version. For the detailed information about the possibility of installation on a specific vehicle, please refer to our web-catalogue http://catalogo.facet.eu/

Vehicle	alim.	kW	Date	Engine	FUNCTIONS ON THE VEHICLE A10	A20	A40	A50	A70	C10 - C30	C20	E01
356												
A 1600	Petrol	44	01/55-12/59	ENGINE --								
Engine: All engines	Information:					1.2547		3.7521RS				
A 1600 GS Carrera	Petrol	85	01/55-12/61	ENGINE --								
Engine: All engines	Information:					1.2547						
A 1600 S	Petrol	55	01/55-12/59	ENGINE 616.15								
Engine: All engines	Information:					1.2547		3.7521RS				
Engine: All engines	Information: version BOSCH						2.7476PHT					
A 1600 Super	Petrol	55	01/55-12/59	ENGINE 616.15								
Engine: All engines	Information:					1.2547		3.7521RS				
Engine: All engines	Information: version BOSCH						2.7476PHT					
B 1600	Petrol	44	09/59-08/63	ENGINE --								
Engine: All engines	Information:					1.2547		3.7521RS				
B 1600 Super 75	Petrol	55	01/59-12/63	ENGINE 616.15								
Engine: All engines	Information:					1.2547		3.7521RS				
B 1600 Super 90	Petrol	66	01/59-12/63	ENGINE --								
Engine: All engines	Information:					1.2547		3.7521RS				
C 1600	Petrol	55	01/63-12/65	ENGINE 616.15								
Engine: All engines	Information:					1.2547						
C 1600 SC	Petrol	70	01/63-12/65	ENGINE --								
Engine: All engines	Information:					1.2547		3.7518RS, 3.7521RS				
911 I												
2.0 L	Petrol	110	08/67-11/68	ENGINE --								
Engine: All engines	Information:					1.2547						
2.0 L	Petrol	96	01/67-12/68	ENGINE 901.01, 901.05								
Engine: All engines	Information: version Bosch						2.7472PHT					
2.0 S	Petrol	118	07/66-11/68	ENGINE 901.02, 901.08								
Engine: All engines	Information:					1.2547						
2.0 S	Petrol	125	07/66-02/72	ENGINE 901.10								
Engine: All engines	Information:					1.2547						
2.7	Petrol	110	09/73-08/75	ENGINE 911.41, 911.46, 911.92, 911.97								
Engine: All engines	Information:					1.2562						

A10	CONDENSER	**A20**	CONTACT SET	**A40**	DISTRIBUTOR CAP	**A50**	ROTOR	**A70**	PICK-UP
C10	COIL	**C20**	IGNITION MODULE	**C30**	ELECTRONIC IGNITION KIT	**E01**	IGNITION CABLE SET		

The present application list is a brief version. For the detailed information about the possibility of installation on a specific vehicle, please refer to our web-catalogue http://catalogo.facet.eu/

Vehicle	alim.	kW	Date	Engine	FUNCTIONS ON THE VEHICLE A10	A20	A40	A50	A70	C10 - C30	C20	E01
2.7	Petrol	121	09/75-06/77	**911.43, 911.48, 911.81, 911.82, 911.84, 911.85, 911.86, 911.89, 911.90, 911.94, 911.99**								
All engines						1.2562						
2.7 S	Petrol	129	08/73-01/76	**911.42, 911.47, 911.93, 911.98**								
All engines						1.2562						
2.7 S Carrera	Petrol	129	08/73-01/76	**911.42, 911.47, 911.93, 911.98**								
All engines						1.2562						
2.7 SC Carrera RS	Petrol	154	08/72-01/79	**911.83**								
All engines						1.2562						
3.2 SC Carrera	Petrol	170	08/83-08/89	**930.20**								
All engines	version Bosch						2.7523PHT	3.7573/13RS				
911 II												
3.3 Turbo	Petrol	235	08/90-09/93	**M 30.69**								
All engines	version Bosch							3.7573/13RS				
3.3 Turbo S	Petrol	261	06/91-12/92	**M 30.69S**								
All engines	version Bosch							3.7573/13RS				
3.6 Carrera	Petrol	184	12/88-05/94	**M 64.01, M 64.02**								
All engines	Qty: 2, version Bosch							3.7573/13RS				
All engines	Qty: 2										9.4034	
3.6 Carrera 4	Petrol	184	12/88-05/94	**M 64.01**								
All engines	Qty: 2, version Bosch							3.7573/13RS				
All engines	Qty: 2										9.4034	
3.6 Carrera RS	Petrol	191	06/91-09/93	**M 64.03**								
All engines	Qty: 2, version Bosch							3.7573/13RS				
All engines	Qty: 2										9.4034	
3.6 Turbo	Petrol	265	01/93-09/93	**M 64.50**								
All engines	version Bosch							3.7573/13RS				
911 III												
3.6 Carrera	Petrol	200	10/93-08/95	**M 64.05, M 64.06, M 64.07, M 64.08**								
All engines	Qty: 2, version Bosch							3.7573/13RS				

A10	CONDENSER	**A20**	CONTACT SET	**A40**	DISTRIBUTOR CAP	**A50**	ROTOR	**A70**	PICK-UP
C10	COIL	**C20**	IGNITION MODULE	**C30**	ELECTRONIC IGNITION KIT	**E01**	IGNITION CABLE SET		

The present application list is a brief version. For the detailed information about the possibility of installation on a specific vehicle, please refer to our web-catalogue http://catalogo.facet.eu/

PORSCHE

Vehicle	alim.	kW	Date	Engine	FUNCTIONS ON THE VEHICLE: A10	A20	A40	A50	A70	C10 - C30	C20	E01
3.6 Carrera	Petrol	210	08/95-09/97	M 64.21, M 64.22, M 64.23, M 64.24				3.7573/13RS				
3.6 Carrera 4	Petrol	200	07/94-08/95	M 64.05, M 64.07				3.7573/13RS				
3.6 Carrera 4	Petrol	210	08/95-09/97	M 64.21, M 64.23				3.7573/13RS				
3.6 Turbo 4	Petrol	300	03/95-09/97	M 64.60			2.7523PHT	3.7573/13RS				
3.6 Turbo GT2	Petrol	316	03/95-09/97	M 64.60R			2.7523PHT	3.7573/13RS				
3.6 Turbo GT2 4	Petrol	316	08/95-09/97	M 64.60R			2.7523PHT	3.7573/13RS				
3.6 Turbo GT2 4	Petrol	331	06/97-09/97	M 64.60RS			2.7523PHT	3.7573/13RS				
3.8 Carrera	Petrol	210	06/95-09/97	M 64.05S, M 64.06S				3.7573/13RS				
3.8 Carrera	Petrol	221	08/95-09/97	M 64.21S				3.7573/13RS				
3.8 Carrera 4	Petrol	210	06/95-09/97	M 64.05S, M 64.06S				3.7573/13RS				
3.8 Carrera 4	Petrol	221	08/95-09/97	M 64.21S				3.7573/13RS				
3.8 Carrera RS	Petrol	221	06/95-09/97	M 64.20				3.7573/13RS				
912												
1.6	Petrol	66	01/65-02/70	616.36, 616.39, 616.40		1.2547						
							2.7476PHT					
924												
2.0 Turbo	Petrol	130	06/80-10/86	M 31.03			2.7479PHT	3.7525RS				

Engine	Information
All engines	Qty: 2, version Bosch
All engines	version Bosch
All engines	
All engines	version BOSCH

A10	CONDENSER	A20	CONTACT SET	A40	DISTRIBUTOR CAP	A50	ROTOR	A70	PICK-UP
C10	COIL	C20	IGNITION MODULE	C30	ELECTRONIC IGNITION KIT	E01	IGNITION CABLE SET		

The present application list is a brief version. For the detailed information about the possibility of installation on a specific vehicle, please refer to our web-catalogue http://catalogo.facet.eu/

Vehicle	alim.	kW	Date	Engine	FUNCTIONS ON THE VEHICLE							
					A10	A20	A40	A50	A70	C10 - C30	C20	E01
2.5 S	Petrol	110	09/85-07/87	ENGINE M 44.07								
Engine: All engines	Information: version Bosch						2.7517PHT	3.7570RS				
928												
4.7 S	Petrol	221	09/79-07/83	ENGINE M 28.11, M 28.12								
Engine: All engines	Information: version Bosch						2.7490PHT					
Engine: All engines	Information: FOR: (CH), FOR: (AUS), version Bosch						2.7517PHT	3.7570RS				
4.7 S	Petrol	228	08/83-07/86	ENGINE M 28.21, M 28.22								
Engine: All engines	Information: Qty: 2, version Bosch						2.7528PHT					
5.4 GTS	Petrol	257	08/91-11/95	ENGINE M 28.49, M 28.50								
Engine: All engines	Information: Qty: 2, version Bosch						2.7528PHT					
Engine: All engines	Information: Qty: 2										9.4034	
968												
3.0	Petrol	176	06/91-11/95	ENGINE M 44.43, M 44.44								
Engine: All engines	Information: version Bosch						2.7528PHT					
CAYENNE												
3.0 S Plug-in Hybrid Supercharged	Diesel/ Electro	245	01/15->	ENGINE MCG.EA, MCG.FA								
Engine: All engines	Information: x 6, COIL ON PLUG									9.6327 C10		
CAYENNE I												
3.2	Petrol	177	08/03-09/07	ENGINE M02.2Y								
Engine: All engines	Information: x 6, COIL ON PLUG									9.6334 C10		
3.2	Petrol	184	10/03-09/07	ENGINE M02.2Y								
Engine: All engines	Information: x 6, COIL ON PLUG									9.6334 C10		
3.6	Petrol	213	02/07-09/10	ENGINE M 55.01								
Engine: All engines	Information: x 6, COIL ON PLUG									9.6334 C10		
CAYENNE II												
3.0 S E-Hybrid	Petrol/ Electric	306	10/14->	ENGINE M 06.EC, MCG.EA, MCG. FA								
Engine: Eng. M 06.EC	Information: Qty: 6									9.6327 C10		
Engine: Eng. MCG.EA, MCG.FA	Information: x 6, COIL ON PLUG									9.6327 C10		
3.6	Petrol	220	06/10->	ENGINE M 55.02, MCE.YA								
Engine: All engines	Information: x 6, COIL ON PLUG									9.6334 C10		
CAYENNE III												
2.9 S AWD	Petrol	324	05/17->	ENGINE DCAB, MDC.AB								
Engine: All engines	Information: x 6, COIL ON PLUG									9.6536 C10		

A10	CONDENSER	**A20**	CONTACT SET	**A40**	DISTRIBUTOR CAP	**A50**	ROTOR	**A70**	PICK-UP
C10	COIL	**C20**	IGNITION MODULE	**C30**	ELECTRONIC IGNITION KIT	**E01**	IGNITION CABLE SET		

The present application list is a brief version. For the detailed information about the possibility of installation on a specific vehicle, please refer to our web-catalogue http://catalogo.facet.eu/

Vehicle	alim.	kW	Date	Engine	FUNCTIONS ON THE VEHICLE							
					A10	A20	A40	A50	A70	C10 - C30	C20	E01
3.0 AWD	Petrol	250	05/17->	DCBE, MDC.BE						9.6536 C10		
3.0 E-Hybrid AWD	Petrol/ Electric	250	05/17->	DCBE, MDC.BE						9.6536 C10		
3.0 E-Hybrid AWD	Petrol/ Electric	339	01/19->	DCBE, MDC.BE						9.6536 C10		
3.0 E-Hybrid AWD	Petrol/ Electric	340	01/19->	DCBE, MDC.BE						9.6536 C10		
4.0 Turbo AWD	Petrol	404	05/17->	DCUA, MDC.UA						9.6536 C10		
4.0 Turbo GT AWD	Petrol	471	06/21->	DWNA						9.6536 C10		
4.0 Turbo S E-Hybrid AWD	Petrol/ Electric	500	10/19->	DCUA						9.6536 C10		
MACAN												
2.0	Petrol	174	07/14->	MCN.CC, MCY.NA						9.6536 C10		
2.0	Petrol	180	05/18->	DKNA						9.6536 C10		
2.0	Petrol	185	05/15->	DLHB, MCY.PA						9.6536 C10		
2.9 Turbo AWD	Petrol	324	05/18->	DGRC						9.6536 C10		
3.0 S	Petrol	260	05/18->	DLZB						9.6536 C10		
PANAMERA												
2.9 4	Petrol	243	05/16->	MDG.PA						9.6536 C10		

Engine	Information
All engines	x 6, COIL ON PLUG
All engines	x 6, COIL ON PLUG
All engines	x 6, COIL ON PLUG
All engines	x 6, COIL ON PLUG
All engines	x 8, COIL ON PLUG
All engines	x 8, version 9A7905110, COIL ON PLUG
All engines	x 8, COIL ON PLUG
Eng. MCN.CC	x 4, COIL ON PLUG
Eng. MCY.NA	Qty: 4
All engines	x 4, COIL ON PLUG
All engines	x 4, COIL ON PLUG
All engines	x 6, COIL ON PLUG
All engines	x 6, COIL ON PLUG
All engines	x 6, COIL ON PLUG

A10	CONDENSER	A20	CONTACT SET	A40	DISTRIBUTOR CAP	A50	ROTOR	A70	PICK-UP
C10	COIL	C20	IGNITION MODULE	C30	ELECTRONIC IGNITION KIT	E01	IGNITION CABLE SET		

The present application list is a brief version. For the detailed information about the possibility of installation on a specific vehicle, please refer to our web-catalogue http://catalogo.facet.eu/

Vehicle	alim.	kW	Date	Engine	FUNCTIONS ON THE VEHICLE A10	A20	A40	A50	A70	C10 - C30	C20	E01
2.9 4 E-Hybrid	Petrol/ Electric	243	05/16->	DGPA, MDG.PA						9.6536 C10		
2.9 4 E-Hybrid	Petrol/ Electric	340	05/16->	DGPA, MDG.PA						9.6536 C10		
2.9 4S	Petrol	324	05/16->	MCS.ZA						9.6536 C10		
2.9 4S E-Hybrid	Petrol/ Electric	324	08/20->	CSZA						9.6536 C10		
2.9 4S E-Hybrid	Petrol/ Electric	412	08/20->	DGPA						9.6536 C10		
3.0	Petrol	243	05/16->	MCX.TA						9.6536 C10		
3.0 4	Petrol	243	05/16->	MCX.TA						9.6536 C10		
3.0 S E-Hybrid	Petrol/ Electric	245	03/11-07/13	MCG.EA, MCG.FA						9.6327 C10		
3.0 S E-Hybrid	Petrol/ Electric	279	03/11-07/13	MCG.EA, MCG.FA						9.6327 C10		
3.0 S E-Hybrid	Petrol/ Electric	306	07/13-10/16	MCG.EA, MCG.FA						9.6327 C10		
4.0 GTS	Petrol	338	01/18->	CVDD						9.6536 C10		
4.0 Turbo	Petrol	404	05/16->	MCV.DA						9.6536 C10		
4.0 Turbo S E-Hybrid	Petrol	515	05/20->	CVDA						9.6536 C10		
4.0 Turbo S E-Hybrid	Petrol/ Electric	404	05/17->	MCV.DA						9.6536 C10		

Engine	Information	A10	A20	A40	A50	A70	C10 - C30	C20	E01
All engines	x 6, COIL ON PLUG						9.6536 C10		
All engines	x 8, COIL ON PLUG						9.6536 C10		

A10	CONDENSER	A20	CONTACT SET	A40	DISTRIBUTOR CAP	A50	ROTOR	A70	PICK-UP
C10	COIL	C20	IGNITION MODULE	C30	ELECTRONIC IGNITION KIT	E01	IGNITION CABLE SET		

The present application list is a brief version. For the detailed information about the possibility of installation on a specific vehicle, please refer to our web-catalogue http://catalogo.facet.eu/

Vehicle	alim.	kW	Date	Engine	FUNCTIONS ON THE VEHICLE							
					A10	A20	A40	A50	A70	C10 - C30	C20	E01
4.0 Turbo S E-Hybrid	Petrol/ Electric	**500**	05/17->	**MCV.DA**								

Engine	Information	A10	A20	A40	A50	A70	C10 - C30		C20	E01
All engines	x 8, COIL ON PLUG						9.6536	C10		

Vehicle	alim.	kW	Date	Engine
4.0 Turbo S E-Hybrid	Petrol/ Electric	**515**	05/20->	**CVDA**

Engine	Information	A10	A20	A40	A50	A70	C10 - C30		C20	E01
All engines	x 8, COIL ON PLUG						9.6536	C10		

A10	CONDENSER	**A20**	CONTACT SET	**A40**	DISTRIBUTOR CAP	**A50**	ROTOR	**A70**	PICK-UP
C10	COIL	**C20**	IGNITION MODULE	**C30**	ELECTRONIC IGNITION KIT	**E01**	IGNITION CABLE SET		

The present application list is a brief version. For the detailed information about the possibility of installation on a specific vehicle, please refer to our web-catalogue http://catalogo.facet.eu/

Vehicle	alim.	kW	Date	Engine	FUNCTIONS ON THE VEHICLE A10	A20	A40	A50	A70	C10 - C30	C20	E01

G-MODELL

				ENGINE
230 GE	Petrol	**92**	03/79-07/00	**M 102.981, M 102.987, M 102.996**

Engine	Information	A10	A20	A40	A50	A70	C10 - C30		C20	E01
Eng. M 102.981, M 102.987	version Bosch			2.7508PHT						
Eng. M 102.996	version Bosch			2.7530/4PHT						
All engines	version Bosch				3.7555RS					
Eng. M 102.996							9.6078	C10		
Eng. M 102.981, M 102.987							9.6080	C10		4.9654

				ENGINE
230 GE	Petrol	**93**	07/89-08/93	**M 102.989**

Engine	Information	A10	A20	A40	A50	A70	C10 - C30		C20	E01
All engines	version Bosch			2.7530/4PHT	3.7573/21RS					
All engines							9.6078	C10		

				ENGINE
280 GE	Petrol	**110**	01/86-12/91	**M 110.994**

Engine	Information	A10	A20	A40	A50	A70	C10 - C30		C20	E01
All engines	version Bosch		1.2534HDVS							
All engines	->eng. 004203, 001498, version Bosch			2.7492PHT						
All engines	eng. type 004205, 001499 ->, version Bosch			2.7523PHT						
All engines	eng. type 002294, 000115 ->, ->eng. 004203, 001498, version Bosch				3.7524RS					
All engines	->eng. 002293, 000114, version Bosch				3.7534RS					
All engines	eng. type 004204, 001499 ->, version Bosch				3.7560RS					
All engines	ch. 034825, 901172 ->						9.6080	C10		

				ENGINE
300 GE	Petrol	**125**	06/89-08/93	**M 103.987**

Engine	Information	A10	A20	A40	A50	A70	C10 - C30		C20	E01
All engines	version Bosch			2.7530/7PHT	3.7573/25RS					
All engines							9.6078	C10		4.9657

				ENGINE
G 320	Petrol	**155**	02/94-12/97	**M 104.996**

Engine	Information	A10	A20	A40	A50	A70	C10 - C30		C20	E01
All engines	Qty: 3, without spark plug connector						9.6216	C10		
All engines	incl. spark plug connector, Qty: 3						9.6216K	C10		

				ENGINE
G 36 AMG	Petrol	**200**	01/95-04/98	**M 104.952 (AMG 3, 6)**

Engine	Information	A10	A20	A40	A50	A70	C10 - C30		C20	E01
All engines	Qty: 3, without spark plug connector						9.6216	C10		
All engines	incl. spark plug connector, Qty: 3						9.6216K	C10		

				ENGINE
G 500	Petrol	**218**	12/97-11/00	**M 113.962**

Engine	Information	A10	A20	A40	A50	A70	C10 - C30		C20	E01
All engines	Qty: 8						9.6317	C10		

				ENGINE
G 55 AMG	Petrol	**260**	04/99-03/01	**M 113.982**

Engine	Information	A10	A20	A40	A50	A70	C10 - C30		C20	E01
All engines	Qty: 8						9.6317	C10		

A10	CONDENSER	**A20**	CONTACT SET	**A40**	DISTRIBUTOR CAP	**A50**	ROTOR	**A70**	PICK-UP
C10	COIL	**C20**	IGNITION MODULE	**C30**	ELECTRONIC IGNITION KIT	**E01**	IGNITION CABLE SET		

The present application list is a brief version. For the detailed information about the possibility of installation on a specific vehicle, please refer to our web-catalogue http://catalogo.facet.eu/

Vehicle	alim.	kW	Date	Engine	FUNCTIONS ON THE VEHICLE							
					A10	A20	A40	A50	A70	C10 - C30	C20	E01

REBEL

				ENGINE
700	Petrol	23	01/68-08/71	--

Engine	Information	A10	A20	A40	A50	A70	C10 - C30	C20	E01
All engines				2.8075	3.8106				

				ENGINE
750	Petrol	24	08/71-12/73	--

Engine	Information	A10	A20	A40	A50	A70	C10 - C30	C20	E01
All engines				2.8075	3.8106				

ROBIN

				ENGINE
850	Petrol	29	11/73-10/02	--

Engine	Information	A10	A20	A40	A50	A70	C10 - C30	C20	E01
All engines				2.8075	3.8106				

A10	CONDENSER	A20	CONTACT SET	A40	DISTRIBUTOR CAP	A50	ROTOR	A70	PICK-UP
C10	COIL	C20	IGNITION MODULE	C30	ELECTRONIC IGNITION KIT	E01	IGNITION CABLE SET		

The present application list is a brief version. For the detailed information about the possibility of installation on a specific vehicle, please refer to our web-catalogue http://catalogo.facet.eu/

Vehicle	alim.	kW	Date	Engine	FUNCTIONS ON THE VEHICLE A10	A20	A40	A50	A70	C10 - C30	C20	E01

11

				ENGINE
1.1	Petrol	35	03/83-06/86	C1E 715, C1E 720

Engine	Information	A10	A20	A40	A50	A70	C10 - C30	C20	E01
All engines	version Ducellier		1.3691/26	2.7654PHT	3.7691				
All engines	version Marelli			2.8201PHT	3.8247RS		9.6001D C10		

				ENGINE
1.2	Petrol	40	10/84-12/88	C1G 700, C1G 710

Engine	Information	A10	A20	A40	A50	A70	C10 - C30	C20	E01
All engines	version Ducellier		1.3691/26	2.7659PHT	3.7694				
All engines	version Femsa		1.3726		3.7758				
All engines							9.6001D C10		4.8839

				ENGINE
1.4	Petrol	43	07/86-10/87	C2J 720

Engine	Information	A10	A20	A40	A50	A70	C10 - C30	C20	E01
All engines	version Ducellier			2.7659PHT					
All engines	version Femsa			2.7723PHT	3.7758				
All engines	distr. num. 525 352 A/B, version Ducellier				3.7688				
All engines	distr. num. 525 352 C/D, version Ducellier				3.7694				
All engines									4.8839

				ENGINE
1.4	Petrol	49	03/83-12/88	C2J 720, C2J 766, C2J 767, C2J 768

Engine	Information	A10	A20	A40	A50	A70	C10 - C30	C20	E01
All engines	version Ducellier			2.7659PHT					
All engines	version Femsa			2.7723PHT	3.7758				
All engines	distr. num. 525 352 A/B, version Ducellier				3.7688				
All engines	distr. num. 525 352 C/D, version Ducellier				3.7694				
All engines									4.8839

				ENGINE
1.7	Petrol	54	10/86-12/88	F2N 730

Engine	Information	A10	A20	A40	A50	A70	C10 - C30	C20	E01
All engines				2.7662PHT					

				ENGINE
1.7	Petrol	55	10/84-12/88	F3N 718

Engine	Information	A10	A20	A40	A50	A70	C10 - C30	C20	E01
All engines				2.7662PHT					

				ENGINE
1.7	Petrol	59	10/83-12/87	F2N 700, F2N 704

Engine	Information	A10	A20	A40	A50	A70	C10 - C30	C20	E01
Eng. F2N 700	version Femsa		1.3726	2.7723PHT	3.7758				
Eng. F2N 700	version Marelli		1.4948M		3.8247RS				
All engines				2.7662PHT					
Eng. F2N 700	version Ducellier			2.7663PHT	3.7697				
Eng. F2N 700	Kit, version Ducellier			2.7673PHT					

				ENGINE
1.7	Petrol	64	06/87-12/88	F2N 732, F2N 742

Engine	Information	A10	A20	A40	A50	A70	C10 - C30	C20	E01
All engines				2.7662PHT					

				ENGINE
1.7	Petrol	65	10/86-12/88	F2N 708, F2N 710, F2N 798

Engine	Information	A10	A20	A40	A50	A70	C10 - C30	C20	E01
All engines				2.7662PHT					

12

				ENGINE
1.3	Petrol	37	07/75-04/80	810.02

Engine	Information	A10	A20	A40	A50	A70	C10 - C30	C20	E01
All engines			1.2540		3.7514RS				

A10	CONDENSER	A20	CONTACT SET	A40	DISTRIBUTOR CAP	A50	ROTOR	A70	PICK-UP
C10	COIL	C20	IGNITION MODULE	C30	ELECTRONIC IGNITION KIT	E01	IGNITION CABLE SET		

The present application list is a brief version. For the detailed information about the possibility of installation on a specific vehicle, please refer to our web-catalogue http://catalogo.facet.eu/

Vehicle	alim.	kW	Date	Engine	FUNCTIONS ON THE VEHICLE: A10	A20	A40	A50	A70	C10 - C30	C20	E01
1.3	Petrol	40	10/69-08/80	ENGINE 810-02/97								
Engine	Information				A10	1.2540		3.7514RS				
All engines												
1.3	Petrol	44	08/73-08/80	ENGINE 810.05, 810.06								
Engine	Information				A10	1.2540						
All engines												
1.3 TS	Petrol	44	08/72-08/80	ENGINE 810.05, 810.06								
Engine	Information				A10	1.2540						
All engines												
14												
1.4	Petrol	52	09/79-06/83	ENGINE 150								
Engine	Information				A10							
All engines	version Ducellier				0.0334			3.7688				
All engines	version Marelli						2.8198PHT	3.8247RS				
18												
1.4	Petrol	47	04/78-07/86	ENGINE 847 720, 847 722								
Engine	Information				A10	1.2540						
All engines												
All engines	version Ducellier						2.7659PHT					
All engines	version Femsa						2.7723PHT	3.7758				
All engines	distr. num. 525 352 A/B, version Ducellier							3.7688				
All engines	distr. num. 525 352 C/D, version Ducellier							3.7694				
All engines	01/01/85 ->									9.6007		
1.6 TS	Petrol	71	05/82-07/86	ENGINE A6M 725, A6M 726						C10		
Engine	Information				A10							
All engines	version Ducellier						2.7659PHT					
All engines	distr. num. 525 352 A/B, version Ducellier							3.7688				
All engines	distr. num. 525 352 C/D, version Ducellier							3.7694				
All engines	01/01/85 ->									9.6007		
2.0	Petrol	77	05/82-07/86	ENGINE J6R 716						C10		
Engine	Information				A10							
All engines	-air conditioning, version Ducellier						2.7659PHT					
All engines	+air conditioning, version Ducellier						2.7679PHT					
All engines	version Ducellier							3.7694				
All engines	01/01/85 ->									9.6007		
19 I										C10		
1.2	Petrol	40	01/88-12/92	ENGINE C1G 730								
Engine	Information				A10							
All engines	version Ducellier						2.7659PHT					
All engines	version Femsa						2.7723PHT	3.7758				
All engines	distr. num. 525 352 A/B, version Ducellier							3.7688				
All engines	distr. num. 525 352 C/D, version Ducellier							3.7694				
All engines										9.6007		
1.2i	Petrol	0	01/89-12/92	ENGINE E7F						C10		4.8543
Engine	Information				A10							
All engines	version Ducellier						2.7681PHT	3.7701				
All engines	version Marelli						2.8211PHT	3.8259				
All engines										9.6007		
1.4	Petrol	43	07/88-05/93	ENGINE C2J 772, C3J 710						C10		4.8801
Engine	Information				A10							
All engines	version Ducellier						2.7659PHT					
All engines	version Femsa						2.7723PHT	3.7758				

A10	CONDENSER	A20	CONTACT SET	A40	DISTRIBUTOR CAP	A50	ROTOR	A70	PICK-UP
C10	COIL	C20	IGNITION MODULE	C30	ELECTRONIC IGNITION KIT	E01	IGNITION CABLE SET		

The present application list is a brief version. For the detailed information about the possibility of installation on a specific vehicle, please refer to our web-catalogue http://catalogo.facet.eu/

Vehicle	alim.	kW	Date	Engine	FUNCTIONS ON THE VEHICLE							
					A10	A20	A40	A50	A70	C10 - C30	C20	E01
1.4	Petrol	43	07/88-05/93	ENGINE C2J 772, C3J 710								
All engines				distr. num. 525 352 A/B, version Ducellier				3.7688				
All engines				distr. num. 525 352 C/D, version Ducellier				3.7694				
All engines										9.6007 C10		
1.4	Petrol	50	09/88-09/92	ENGINE C2J 776								
All engines				version Ducellier			2.7659PHT					
All engines				version Femsa			2.7723PHT	3.7758				
All engines				distr. num. 525 352 A/B, version Ducellier				3.7688				
All engines				distr. num. 525 352 C/D, version Ducellier				3.7694				
All engines										9.6007 C10		
1.4	Petrol	55	09/90-04/92	ENGINE E7J 700								
All engines				version Ducellier			2.7681PHT	3.7701				
All engines				version Marelli			2.8211PHT	3.8259				
All engines										9.6007 C10		4.8801
1.4	Petrol	57	07/88-08/90	ENGINE E6J 700, E6J 701								
All engines				version Ducellier			2.7681PHT	3.7701				
All engines				version Marelli			2.8211PHT	3.8259				
All engines										9.6007 C10		4.8801
1.4	Petrol	58	06/89-08/90	ENGINE E6J 700								
All engines				version Ducellier			2.7681PHT	3.7701				
All engines				version Marelli			2.8211PHT	3.8259				
All engines										9.6007 C10		4.8801
1.4	Petrol	59	01/88-12/92	ENGINE E6J 700, E6J 701								
All engines				version Ducellier			2.7681PHT	3.7701				
All engines				version Marelli			2.8211PHT	3.8259				
All engines										9.6007 C10		4.8801
1.4 Cat	Petrol	43	01/89-04/92	ENGINE C3J 710								
All engines				version Ducellier			2.7659PHT					
All engines				version Femsa			2.7723PHT	3.7758				
All engines				distr. num. 525 352 A/B, version Ducellier				3.7688				
All engines				distr. num. 525 352 C/D, version Ducellier				3.7694				
All engines										9.6007 C10		
1.7	Petrol	54	09/88-04/92	ENGINE F3N 740, F3N 741								
All engines				version Ducellier			2.7669PHT	3.7697				
All engines				Kit, version Ducellier			2.7672PHT					
All engines										9.6007 C10		
1.7	Petrol	55	09/88-12/92	ENGINE F2N 724								
All engines				version Ducellier			2.7669PHT	3.7697				
All engines				Kit, version Ducellier			2.7672PHT					
All engines										9.6007 C10		

A10	CONDENSER	A20	CONTACT SET	A40	DISTRIBUTOR CAP	A50	ROTOR	A70	PICK-UP
C10	COIL	C20	IGNITION MODULE	C30	ELECTRONIC IGNITION KIT	E01	IGNITION CABLE SET		

The present application list is a brief version. For the detailed information about the possibility of installation on a specific vehicle, please refer to our web-catalogue http://catalogo.facet.eu/

Vehicle	alim.	kW	Date	Engine	FUNCTIONS ON THE VEHICLE A10	A20	A40	A50	A70	C10 - C30	C20	E01
1.7	Petrol	66	07/88-04/92	ENGINE F2N 722, F3N 742, F3N 743								
Engine		Information										
All engines		version Ducellier					2.7669PHT	3.7697				
All engines		Kit, version Ducellier					2.7672PHT					
All engines										9.6007 C10		
1.7	Petrol	68	09/88-12/92	ENGINE F2N 720, F2N 721								
Engine		Information										
All engines		version Ducellier					2.7669PHT	3.7697				
All engines		Kit, version Ducellier					2.7672PHT					
All engines										9.6007 C10		
1.7	Petrol	69	09/90-04/92	ENGINE F2N 721								
Engine		Information										
All engines		version Ducellier					2.7669PHT	3.7697				
All engines		Kit, version Ducellier					2.7672PHT					
All engines										9.6007 C10		
1.7	Petrol	70	07/91-04/92	ENGINE F3N 742, F3N 743								
Engine		Information										
All engines		version Ducellier					2.7669PHT	3.7697				
All engines		Kit, version Ducellier					2.7672PHT					
All engines										9.6007 C10		
1.7	Petrol	79	08/88-12/92	ENGINE F3N 746								
Engine		Information										
All engines		version Ducellier					2.7669PHT	3.7697				
All engines		Kit, version Ducellier					2.7672PHT					
All engines										9.6007 C10		4.8415
1.8 16V	Petrol	101	06/89-04/92	ENGINE F7P 700, F7P 704								
Engine		Information										
All engines		version Ducellier					2.7681PHT	3.7701				
All engines										9.6007 C10		4.8802
1.8 16V	Petrol	103	06/89-09/92	ENGINE F7P 700								
Engine		Information										
All engines		version Ducellier					2.7681PHT	3.7701				
All engines										9.6007 C10		4.8802
1.8 16V	Petrol	99	06/89-04/92	ENGINE F7P 704								
Engine		Information										
All engines		version Ducellier					2.7681PHT	3.7701				
All engines										9.6007 C10		4.8802
19 II												
1.2	Petrol	44	05/92-09/94	ENGINE E7F 730								
Engine		Information										
All engines		version Ducellier					2.7681PHT	3.7701				
All engines		version Marelli					2.8211PHT	3.8259				
All engines										9.6007 C10		4.8801
1.4	Petrol	43	04/92-12/95	ENGINE C3J 710								
Engine		Information										
All engines		version Ducellier					2.7659PHT					
All engines		version Femsa					2.7723PHT	3.7758				
All engines		distr. num. 525 352 A/B, version Ducellier						3.7688				
All engines		distr. num. 525 352 C/D, version Ducellier						3.7694				
All engines										9.6007 C10		

A10	CONDENSER	A20	CONTACT SET	A40	DISTRIBUTOR CAP	A50	ROTOR	A70	PICK-UP
C10	COIL	C20	IGNITION MODULE	C30	ELECTRONIC IGNITION KIT	E01	IGNITION CABLE SET		

The present application list is a brief version. For the detailed information about the possibility of installation on a specific vehicle, please refer to our web-catalogue http://catalogo.facet.eu/

Vehicle	alim.	kW	Date	Engine	FUNCTIONS ON THE VEHICLE A10	A20	A40	A50	A70	C10 - C30	C20	E01
1.4	Petrol	44	05/92-09/94	ENGINE C3J 710								
Engine	Information											
All engines	version Ducellier						2.7659PHT					
All engines	version Femsa						2.7723PHT	3.7758				
All engines	distr. num. 525 352 A/B, version Ducellier							3.7688				
All engines	distr. num. 525 352 C/D, version Ducellier							3.7694				
All engines										9.6007 C10		
1.4	Petrol	55	01/92-12/95	ENGINE E7J 707, E7J 742, E7J 745								
Engine	Information											
All engines	version Ducellier						2.7681PHT	3.7701				
All engines	version Marelli						2.8211PHT	3.8259				
Eng. E7J 742, E7J 745										9.6007 C10		
All engines												4.8801
1.4	Petrol	58	05/92-12/95	ENGINE E6J 706								
Engine	Information											
All engines	version Ducellier						2.7681PHT	3.7701				
All engines	version Marelli						2.8211PHT	3.8259				
All engines										9.6007 C10		4.8801
1.4	Petrol	59	01/92-12/95	ENGINE E7J 706								
Engine	Information											
All engines	version Ducellier						2.7681PHT	3.7701				
All engines	version Marelli						2.8211PHT	3.8259				
All engines										9.6007 C10		4.8801
1.7	Petrol	54	04/92-12/95	ENGINE F3N 740, F3N 741								
Engine	Information											
All engines	version Ducellier						2.7669PHT	3.7697				
All engines	Kit, version Ducellier						2.7672PHT					
All engines										9.6007 C10		
1.7	Petrol	55	05/92-11/95	ENGINE F3N 740, F3N 741								
Engine	Information											
All engines	version Ducellier						2.7669PHT	3.7697				
All engines	Kit, version Ducellier						2.7672PHT					
All engines										9.6007 C10		
1.7	Petrol	66	04/92-12/95	ENGINE F3N 742, F3N 743								
Engine	Information											
All engines	version Ducellier						2.7669PHT	3.7697				
All engines	Kit, version Ducellier						2.7672PHT					
All engines										9.6007 C10		
Eng. F3N 743												4.8415
1.7	Petrol	68	09/90-12/95	ENGINE F2N 720, F2N 721, F2N 726, F2N 727								
Engine	Information											
All engines	version Ducellier						2.7669PHT	3.7697				
All engines	Kit, version Ducellier						2.7672PHT					
All engines										9.6007 C10		
1.7	Petrol	79	05/92-09/94	ENGINE F3N 746								
Engine	Information											
All engines	version Ducellier						2.7669PHT	3.7697				
All engines	Kit, version Ducellier						2.7672PHT					
All engines										9.6007 C10		4.8415

A10	CONDENSER	A20	CONTACT SET	A40	DISTRIBUTOR CAP	A50	ROTOR	A70	PICK-UP
C10	COIL	C20	IGNITION MODULE	C30	ELECTRONIC IGNITION KIT	E01	IGNITION CABLE SET		

The present application list is a brief version. For the detailed information about the possibility of installation on a specific vehicle, please refer to our web-catalogue http://catalogo.facet.eu/

Vehicle	alim.	kW	Date	Engine	FUNCTIONS ON THE VEHICLE A10	A20	A40	A50	A70	C10 - C30	C20	E01
1.8	Petrol	65	04/92-06/96	ENGINE 8NA20S, F3P 704, F3P 705, F3P 706, F3P 707, F3P 708								

Engine	Information	A10	A20	A40	A50	A70	C10 - C30	C20	E01
All engines	version Ducellier			2.7669PHT	3.7697		9.6007 C10		
All engines	Kit, version Ducellier			2.7672PHT					
Eng. 8NA20S, F3P 708	version Marelli						9.6128 C10		

Vehicle	alim.	kW	Date	Engine
1.8	Petrol	66	04/92-06/96	ENGINE 8NA20S, F3P 706

Engine	Information	A10	A20	A40	A50	A70	C10 - C30	C20	E01
All engines	version Ducellier			2.7669PHT	3.7697		9.6007 C10		
All engines	Kit, version Ducellier			2.7672PHT					
Eng. 8NA20S	version Marelli						9.6128 C10		

Vehicle	alim.	kW	Date	Engine
1.8	Petrol	67	05/92-09/94	ENGINE F3P 765

Engine	Information	A10	A20	A40	A50	A70	C10 - C30	C20	E01
All engines	version Ducellier			2.7669PHT	3.7697				
All engines	Kit, version Ducellier			2.7672PHT					
All engines							9.6007 C10		

Vehicle	alim.	kW	Date	Engine
1.8	Petrol	79	05/92-06/96	ENGINE 5F 140 FE, F3P 682, F3P 764, F3P 765

Engine	Information	A10	A20	A40	A50	A70	C10 - C30	C20	E01
All engines	version Ducellier			2.7669PHT	3.7697				
All engines	Kit, version Ducellier			2.7672PHT					
All engines							9.6007 C10		

Vehicle	alim.	kW	Date	Engine
1.8	Petrol	81	04/92-05/94	ENGINE 5F 140 FE

Engine	Information	A10	A20	A40	A50	A70	C10 - C30	C20	E01
All engines	version Ducellier			2.7669PHT	3.7697				
All engines	Kit, version Ducellier			2.7672PHT					
All engines							9.6007 C10		

Vehicle	alim.	kW	Date	Engine
1.8 16V	Petrol	101	05/92-04/94	ENGINE F7P 704

Engine	Information	A10	A20	A40	A50	A70	C10 - C30	C20	E01
All engines	version Ducellier			2.7681PHT	3.7701				
All engines							9.6007 C10		4.8802

Vehicle	alim.	kW	Date	Engine
1.8 16V	Petrol	99	04/92-06/96	ENGINE F7P 704

Engine	Information	A10	A20	A40	A50	A70	C10 - C30	C20	E01
All engines	version Ducellier			2.7681PHT	3.7701				
All engines							9.6007 C10		4.8802

20

Vehicle	alim.	kW	Date	Engine
2.0	Petrol	76	10/80-12/83	ENGINE 829 702, 829 703

Engine	Information	A10	A20	A40	A50	A70	C10 - C30	C20	E01
All engines	version Ducellier	0.0323	1.3686	2.7654PHT	3.7691				
All engines							9.6001D C10		

Vehicle	alim.	kW	Date	Engine
2.0	Petrol	80	10/77-10/80	ENGINE 829 700, 829 701, 829.01

Engine	Information	A10	A20	A40	A50	A70	C10 - C30	C20	E01
All engines	version Ducellier	0.0323	1.3686	2.7654PHT	3.7691				
All engines							9.6001D C10		

21

Vehicle	alim.	kW	Date	Engine
1.4	Petrol	0	06/90-12/91	ENGINE C2L 717

Engine	Information	A10	A20	A40	A50	A70	C10 - C30	C20	E01
All engines	version Ducellier			2.7659PHT	3.7688				
All engines							9.6007 C10		

A10	CONDENSER	A20	CONTACT SET	A40	DISTRIBUTOR CAP	A50	ROTOR	A70	PICK-UP
C10	COIL	C20	IGNITION MODULE	C30	ELECTRONIC IGNITION KIT	E01	IGNITION CABLE SET		

The present application list is a brief version. For the detailed information about the possibility of installation on a specific vehicle, please refer to our web-catalogue http://catalogo.facet.eu/

Vehicle	alim.	kW	Date	Engine	FUNCTIONS ON THE VEHICLE A10	A20	A40	A50	A70	C10 - C30	C20	E01
1.4	Petrol	51	06/88-12/95	ENGINE C2J 770, C2L 714								
Eng. C2J 770	version Ducellier						2.7659PHT	3.7688				
Eng. C2L 714	version Ducellier						2.7691					
All engines										9.6007	C10	
1.7	Petrol	54	06/86-12/95	ENGINE F2N 750, F2N 758, F2N 786, F3N 726								
All engines	version Ducellier						2.7669PHT	3.7697				
All engines	Kit, version Ducellier						2.7672PHT					
All engines										9.6007	C10	
1.7	Petrol	55	03/86-05/93	ENGINE F2N 712, F3N 726								
All engines	version Ducellier						2.7669PHT	3.7697				
All engines	Kit, version Ducellier						2.7672PHT					
All engines										9.6007	C10	
1.7	Petrol	64	06/87-04/89	ENGINE F2N 752								
All engines	version Ducellier						2.7669PHT	3.7697				
All engines	Kit, version Ducellier						2.7672PHT					
All engines										9.6007	C10	
1.7	Petrol	65	03/86-04/95	ENGINE F2N 710, F2N 711, F2N 754								
All engines	version Ducellier						2.7669PHT	3.7697				
All engines	Kit, version Ducellier						2.7672PHT					
All engines										9.6007	C10	
1.7	Petrol	66	09/89-06/94	ENGINE F3N 722, F3N 723								
All engines	version Ducellier						2.7669PHT	3.7697				
All engines	Kit, version Ducellier						2.7672PHT					
All engines										9.6007	C10	
1.7	Petrol	69	03/86-02/94	ENGINE F2N 722, F3N 722, F3N 723								
All engines	version Ducellier						2.7669PHT	3.7697				
All engines	Kit, version Ducellier						2.7672PHT					
All engines										9.6007	C10	
1.7	Petrol	70	04/86-06/89	ENGINE F3N 722, F3N 723								
All engines	version Ducellier						2.7669PHT	3.7697				
All engines	Kit, version Ducellier						2.7672PHT					
All engines										9.6007	C10	
1.7 Cat	Petrol	54	05/88-06/93	ENGINE F3N 726								
All engines	version Ducellier						2.7669PHT	3.7697				
All engines	Kit, version Ducellier						2.7672PHT					
All engines										9.6007	C10	
2.0	Petrol	66	09/89-12/91	ENGINE F2R 702								
All engines	version Ducellier						2.7669PHT	3.7697				
All engines	Kit, version Ducellier						2.7672PHT					
All engines										9.6007	C10	

A10	CONDENSER	A20	CONTACT SET	A40	DISTRIBUTOR CAP	A50	ROTOR	A70	PICK-UP
C10	COIL	C20	IGNITION MODULE	C30	ELECTRONIC IGNITION KIT	E01	IGNITION CABLE SET		

The present application list is a brief version. For the detailed information about the possibility of installation on a specific vehicle, please refer to our web-catalogue http://catalogo.facet.eu/

Vehicle	alim.	kW	Date	Engine	FUNCTIONS ON THE VEHICLE A10	A20	A40	A50	A70	C10 - C30	C20	E01
2.0	Petrol	75	03/86-10/93	ENGINE 8CPD, J6R 758, J6R 759, J6R 793								

Engine	Information	A10	A20	A40	A50	A70	C10 - C30		C20	E01
All engines				2.7665PHT						
Eng. J6R 758, J6R 793	version Ducellier			2.7666PHT						
Eng. J6R 758, J6R 793							9.6007	C10		4.8539

2.0	Petrol	76	04/88-06/89	ENGINE 8CPD, J6R 793

Engine	Information	A10	A20	A40	A50	A70	C10 - C30		C20	E01
All engines				2.7665PHT						
Eng. J6R 793	version Ducellier			2.7666PHT						
Eng. J6R 793							9.6007	C10		4.8539

2.0	Petrol	78	05/91-10/93	ENGINE J6R 758

Engine	Information	A10	A20	A40	A50	A70	C10 - C30		C20	E01
All engines				2.7665PHT			9.6007	C10		4.8539
All engines	version Ducellier			2.7666PHT						

2.0	Petrol	85	03/86-12/88	ENGINE J7R 750, J7R 751

Engine	Information	A10	A20	A40	A50	A70	C10 - C30		C20	E01
All engines				2.7665PHT			9.6007	C10		4.8539
All engines	version Ducellier			2.7666PHT						

2.0	Petrol	86	04/86-06/92	ENGINE J7R 750, J7R 751

Engine	Information	A10	A20	A40	A50	A70	C10 - C30		C20	E01
All engines				2.7665PHT			9.6007	C10		4.8539
All engines	version Ducellier			2.7666PHT						

2.0	Petrol	88	03/86-12/93	ENGINE 14ZR, J7R 747

Engine	Information	A10	A20	A40	A50	A70	C10 - C30		C20	E01
All engines				2.7665PHT			9.6007	C10		4.8539
All engines	version Ducellier			2.7666PHT						

2.0	Petrol	99	02/90-06/94	ENGINE J7R 740

Engine	Information	A10	A20	A40	A50	A70	C10 - C30		C20	E01
All engines	version Ducellier			2.7682PHT	3.7701					
All engines	Kit, version Ducellier			2.7683PHT						
All engines							9.6007	C10		

2.0 4x4	Petrol	88	03/89-12/93	ENGINE 14ZR, J7R 747

Engine	Information	A10	A20	A40	A50	A70	C10 - C30		C20	E01
All engines	version Ducellier			2.7666PHT						
All engines							9.6007	C10		4.8539

2.0 4x4	Petrol	99	12/89-02/94	ENGINE J7R 740

Engine	Information	A10	A20	A40	A50	A70	C10 - C30		C20	E01
All engines	version Ducellier			2.7682PHT	3.7701					
All engines	Kit, version Ducellier			2.7683PHT						
All engines							9.6007	C10		

2.0 Turbo	Petrol	119	02/90-10/92	ENGINE J7R 756

Engine	Information	A10	A20	A40	A50	A70	C10 - C30		C20	E01
All engines	version Ducellier			2.7682PHT	3.7701					
All engines	Kit, version Ducellier			2.7683PHT						
All engines	->year 30/06/91						9.6007	C10		
All engines	01/07/91 ->, info A-K						9.6175	C10		
All engines	01/07/91 ->, info B-K						9.6176	C10		

2.0 Turbo	Petrol	129	04/87-03/90	ENGINE J7R 752

Engine	Information	A10	A20	A40	A50	A70	C10 - C30		C20	E01
All engines	version Ducellier			2.7682PHT	3.7701					

A10	CONDENSER	A20	CONTACT SET	A40	DISTRIBUTOR CAP	A50	ROTOR	A70	PICK-UP
C10	COIL	C20	IGNITION MODULE	C30	ELECTRONIC IGNITION KIT	E01	IGNITION CABLE SET		

The present application list is a brief version. For the detailed information about the possibility of installation on a specific vehicle, please refer to our web-catalogue http://catalogo.facet.eu/

Vehicle	alim.	kW	Date	Engine	FUNCTIONS ON THE VEHICLE A10	A20	A40	A50	A70	C10 - C30	C20	E01

2.0 Turbo	Petrol	129	04/87-03/90	ENGINE J7R 752

Engine	Information	A10	A20	A40	A50	A70	C10 - C30		C20	E01
All engines	Kit, version Ducellier			2.7683PHT						
All engines							9.6007	C10		
All engines	->eng. F140627									4.8539

2.0 Turbo 4x4	Petrol	119	02/90-10/92	ENGINE J7R 756

Engine	Information	A10	A20	A40	A50	A70	C10 - C30		C20	E01
All engines	version Ducellier			2.7682PHT	3.7701					
All engines	Kit, version Ducellier			2.7683PHT						
All engines	->year 30/06/91						9.6007	C10		
All engines	01/07/91 ->, info A-K						9.6175	C10		
All engines	01/07/91 ->, info B-K						9.6176	C10		

2.0 Turbo 4x4	Petrol	129	08/89-10/93	ENGINE J7R 752

Engine	Information	A10	A20	A40	A50	A70	C10 - C30		C20	E01
All engines	version Ducellier			2.7682PHT	3.7701					
All engines	Kit, version Ducellier			2.7683PHT						
All engines							9.6007	C10		
All engines	->eng. F140627									4.8539

2.0 TXi	Petrol	100	07/89-05/93	ENGINE 1SCRMP10U1, J7R 740

Engine	Information	A10	A20	A40	A50	A70	C10 - C30		C20	E01
All engines	version Ducellier			2.7682PHT	3.7701					
All engines	Kit, version Ducellier			2.7683PHT						
All engines							9.6007	C10		

2.2	Petrol	79	06/86-12/95	ENGINE J7T 754, J7T 755, J7T 756

Engine	Information	A10	A20	A40	A50	A70	C10 - C30		C20	E01
Eng. J7T 754, J7T 755				2.7665PHT						
All engines	version Ducellier			2.7666PHT						
All engines							9.6007	C10		4.8539

2.2	Petrol	81	04/86-05/93	ENGINE J7T 755

Engine	Information	A10	A20	A40	A50	A70	C10 - C30		C20	E01
All engines				2.7665PHT			9.6007	C10		4.8539
All engines	version Ducellier			2.7666PHT						

2.2	Petrol	85	03/86-12/95	ENGINE J6T 790, J6T 791

Engine	Information	A10	A20	A40	A50	A70	C10 - C30		C20	E01
All engines	version Ducellier			2.7666PHT						
All engines							9.6007	C10		4.8539

2.2 4x4	Petrol	79	06/86-06/94	ENGINE J7T 754, J7T 755

Engine	Information	A10	A20	A40	A50	A70	C10 - C30		C20	E01
All engines				2.7665PHT			9.6007	C10		4.8539
All engines	version Ducellier			2.7666PHT						

25

2.0	Petrol	74	04/84-12/92	ENGINE 08A, J6R 706, J6R 707, J6R 763

Engine	Information	A10	A20	A40	A50	A70	C10 - C30		C20	E01
Eng. J6R 706, J6R 707	version Ducellier			2.7659PHT	3.7694					
Eng. 08A, J6R 763	version Ducellier			2.7691						
All engines							9.6007	C10		

2.0	Petrol	88	03/87-12/93	ENGINE J7R 722, J7R 723

Engine	Information	A10	A20	A40	A50	A70	C10 - C30		C20	E01
All engines	version Ducellier			2.7691						
All engines							9.6007	C10		4.8539

A10	CONDENSER	A20	CONTACT SET	A40	DISTRIBUTOR CAP	A50	ROTOR	A70	PICK-UP
C10	COIL	C20	IGNITION MODULE	C30	ELECTRONIC IGNITION KIT	E01	IGNITION CABLE SET		

The present application list is a brief version. For the detailed information about the possibility of installation on a specific vehicle, please refer to our web-catalogue http://catalogo.facet.eu/

Vehicle	alim.	kW	Date	Engine	FUNCTIONS ON THE VEHICLE A10	A20	A40	A50	A70	C10 - C30	C20	E01
2.0 12V	Petrol	103	06/88-12/93	ENGINE 7CYQD80D-E3, J7R 721								

Engine	Information	A10	A20	A40	A50	A70	C10 - C30	C20	E01
All engines	01/07/88 ->, version Ducellier			2.7681PHT	3.7701				
All engines	01/07/88 ->, Kit, version Ducellier			2.7683PHT					
All engines	->year 30/06/88, version Ducellier			2.7691	3.7694				
All engines							9.6007 C10		
All engines	->year 30/06/88								4.8539

2.0 12V	Petrol	99	06/89-12/92	ENGINE 74AR-FXE

Engine	Information	A10	A20	A40	A50	A70	C10 - C30	C20	E01
All engines	01/07/88 ->, version Ducellier			2.7681PHT	3.7701				
All engines	01/07/88 ->, Kit, version Ducellier			2.7683PHT					
All engines	->year 30/06/88, version Ducellier			2.7691	3.7694				
All engines							9.6007 C10		

2.2	Petrol	76	11/85-03/89	ENGINE J7T 708, J7T 732

Engine	Information	A10	A20	A40	A50	A70	C10 - C30	C20	E01
All engines	version Ducellier			2.7691					
All engines							9.6007 C10		4.8539

2.2	Petrol	79	09/86-12/92	ENGINE 04TNV88-C, J7T 708, J7T 732

Engine	Information	A10	A20	A40	A50	A70	C10 - C30	C20	E01
All engines	version Ducellier			2.7691					
All engines							9.6007 C10		4.8539

2.2	Petrol	89	04/84-12/89	ENGINE 74G69-S4M, J7T 706, J7T 707, J7T 715

Engine	Information	A10	A20	A40	A50	A70	C10 - C30	C20	E01
Eng. J7T 706, J7T 707	version Ducellier			2.7659PHT	3.7694				
Eng. 74G69-S4M, J7T 715	version Ducellier			2.7691					
All engines							9.6007 C10		4.8539

2.2	Petrol	91	04/84-12/89	ENGINE J7T 730, J7T 731

Engine	Information	A10	A20	A40	A50	A70	C10 - C30	C20	E01
All engines	version Ducellier			2.7691					
All engines							9.6007 C10		4.8539

2.4 V6 Turbo	Petrol	133	10/84-05/90	ENGINE Z7U 702

Engine	Information	A10	A20	A40	A50	A70	C10 - C30	C20	E01
All engines	version Bosch			2.7530/6PHT	3.7573/19RS				
All engines							9.6007 C10		

2.5 V6 Turbo	Petrol	151	01/90-12/92	ENGINE Z7U 700

Engine	Information	A10	A20	A40	A50	A70	C10 - C30	C20	E01
All engines	version Bosch			2.7530/6PHT	3.7573/19RS				
All engines							9.6007 C10		

2.7 V6 Injection	Petrol	104	04/84-08/89	ENGINE Z7V 708, Z7V 709, Z7V 711

Engine	Information	A10	A20	A40	A50	A70	C10 - C30	C20	E01
All engines	version Bosch				3.7523RS				

2.8 V6	Petrol	115	06/87-02/90	ENGINE Z7W 700, Z7W 701

Engine	Information	A10	A20	A40	A50	A70	C10 - C30	C20	E01
All engines	version Bosch			2.7530/6PHT	3.7573/19RS				
All engines							9.6007 C10		

2.8 V6 Injection	Petrol	100	06/86-02/88	ENGINE Z7W 702

Engine	Information	A10	A20	A40	A50	A70	C10 - C30	C20	E01
All engines	version Bosch				3.7523RS				

A10	CONDENSER	A20	CONTACT SET	A40	DISTRIBUTOR CAP	A50	ROTOR	A70	PICK-UP
C10	COIL	C20	IGNITION MODULE	C30	ELECTRONIC IGNITION KIT	E01	IGNITION CABLE SET		

The present application list is a brief version. For the detailed information about the possibility of installation on a specific vehicle, please refer to our web-catalogue http://catalogo.facet.eu/

Vehicle	alim.	kW	Date	Engine	FUNCTIONS ON THE VEHICLE A10	A20	A40	A50	A70	C10 - C30	C20	E01
2.8 V6 Injection	Petrol	110	06/87-12/92	**Z7W 706, Z7W 707, Z7W 709**								
All engines	version Bosch						2.7530/6PHT	3.7573/19RS				
All engines										9.6007	C10	
4												
0.8	Petrol	19	10/62-09/83	**800, 800 705**								
All engines	version DUCELLIER						2.7641					
0.8	Petrol	21	10/83-10/88	**800 705**								
All engines	version Ducellier				0.0323	1.3655	2.7654PHT	3.7691				
All engines	version Sev				0.0856	1.6854	2.8543					
0.8	Petrol	25	09/71-12/88	**800 01**								
All engines	version Ducellier				0.0323	1.3661						
All engines	version Femsa				0.0397	1.3724	2.7723PHT	3.7758				
All engines								3.7681		9.6001D	C10	
1.1	Petrol	25	06/78-06/90	**688 712, C1E 714, C1E 719**								
All engines						1.2540						
Eng. 688 712	version Femsa					1.3726	2.7723PHT	3.7758				
Eng. 688 712	version Marelli						2.8201PHT	3.8247RS				
1.1	Petrol	33	02/78-03/84	**688 712**								
All engines	version Femsa					1.3726	2.7723PHT	3.7758				
All engines	version Marelli						2.8201PHT	3.8247RS				
5												
1.0	Petrol	32	01/72-12/85	**689 710**								
All engines						1.2540						
1.3	Petrol	31	09/76-09/79	**810 726**								
All engines	version Ducellier				0.0323	1.3686		3.7691				
All engines						1.2540				9.6001D	C10	
1.3	Petrol	33	06/79-09/84	**810 719**								
All engines	version Ducellier				0.0323	1.3661						
All engines										9.6001D	C10	
1.3	Petrol	47	09/75-09/84	**810 725**								
All engines						1.2540						
1.4	Petrol	46	01/82-12/85	**847 725, C2J 713**								
All engines						1.2540						
Eng. 847 725	version Femsa						2.7723PHT	3.7758				
1.4 Alpine A5	Petrol	68	09/77-09/81	**840 725**								
All engines	version Ducellier				0.0334		2.7654PHT	3.7691				

A10	CONDENSER	**A20**	CONTACT SET	**A40**	DISTRIBUTOR CAP	**A50**	ROTOR	**A70**	PICK-UP
C10	COIL	**C20**	IGNITION MODULE	**C30**	ELECTRONIC IGNITION KIT	**E01**	IGNITION CABLE SET		

The present application list is a brief version. For the detailed information about the possibility of installation on a specific vehicle, please refer to our web-catalogue http://catalogo.facet.eu/

Vehicle	alim.	kW	Date	Engine	FUNCTIONS ON THE VEHICLE: A10	A20	A40	A50	A70	C10 - C30	C20	E01
1.4 Alpine A5	Petrol	68	09/77-09/81	**840 725**						9.6001D C10		
1.4 Alpine Turbo	Petrol	79	10/81-01/85	**840 726**			2.7659PHT	3.7688				
1.4 Automatik	Petrol	43	06/82-09/84	**847 712**		1.2540						
9												
1.1	Petrol	35	09/81-05/87	**C1E 715**		1.3691/26	2.7654PHT	3.7691				
							2.8201PHT	3.8247RS				
1.2	Petrol	40	09/85-12/88	**C1G 700, C1G 710**		1.3691/26	2.7659PHT	3.7694				
						1.3726		3.7758				
										9.6001D C10		4.8839
1.7	Petrol	54	10/86-12/88	**F3N 718**			2.7662PHT					
1.7	Petrol	55	10/86-12/88	**F2N 730**			2.7662PHT					
1.7	Petrol	59	09/84-12/89	**F2N 700, F2N 704**			2.7662PHT					
1.7	Petrol	65	10/86-12/88	**F2N 708, F2N 710, F2N 798**			2.7662PHT					
1.7	Petrol	69	06/87-12/88	**F3N 708**			2.7662PHT					
AVANTIME												
2.0 16V Turbo	Petrol	120	11/01-05/03	**F4R 760, F4R 761**						9.6332 C10		
CAPTUR												
0.9 TCe 90	Petrol	66	06/13->	**H4B 400, H4B 408**						9.6513 C10		
										9.6513 C10		

Engine	Information
All engines	
All engines	version Ducellier
All engines	distr. num. 525352A/B, version Ducellier
All engines	distr. num. 525352C, version Ducellier
All engines	version Marelli
All engines	version Femsa
All engines	x 4, SAGEM, COIL ON PLUG
All engines	x 3, COIL ON PLUG
Eng. H4B 408	Qty: 3

A10	CONDENSER	**A20**	CONTACT SET	**A40**	DISTRIBUTOR CAP	**A50**	ROTOR	**A70**	PICK-UP
C10	COIL	**C20**	IGNITION MODULE	**C30**	ELECTRONIC IGNITION KIT	**E01**	IGNITION CABLE SET		

The present application list is a brief version. For the detailed information about the possibility of installation on a specific vehicle, please refer to our web-catalogue http://catalogo.facet.eu/

Vehicle	alim.	kW	Date	Engine	FUNCTIONS ON THE VEHICLE A10	A20	A40	A50	A70	C10 - C30	C20	E01
1.0 TCe 90 ECO-G	Petrol/ Liquified Petro-leum Gas (LPG)	67	01/21->	ENGINE **H4D470**								
Engine: All engines	Information: x 3, COIL ON PLUG									9.6452 C10		
1.2 T	Petrol	83	06/13->	ENGINE **H5F 403**								
Engine: All engines	Information: x 4, COIL ON PLUG									9.6513 C10		
1.2 T	Petrol	85	06/15->	ENGINE **H5F 403**								
Engine: All engines	Information: x 4, COIL ON PLUG									9.6513 C10		
1.2 TCe	Petrol	97	02/18->	ENGINE **H5F 408**								
Engine: All engines	Information: x 4, COIL ON PLUG									9.6513 C10		
1.2 TCe 120	Petrol	87	01/16->	ENGINE **H5F 408, H5F 412**								
Engine: All engines	Information: x 4, COIL ON PLUG									9.6513 C10		
1.2 TCe 120	Petrol	88	06/13->	ENGINE **H5F 403**								
Engine: All engines	Information: x 4, COIL ON PLUG									9.6513 C10		
LPG	Petrol/ Liquified Petro-leum Gas (LPG)	74	01/20->	ENGINE **H4D 460**								
Engine: All engines	Information: x 3, COIL ON PLUG									9.6452 C10		
TCe 100	Petrol	74	01/20->	ENGINE **H4D 450**								
Engine: All engines	Information: x 3, COIL ON PLUG									9.6452 C10		
TCe 90	Petrol	67	09/20->	ENGINE **H4D470**								
Engine: All engines	Information: x 3, COIL ON PLUG									9.6452 C10		
CLIO												
1.2	Petrol	47	11/12->	ENGINE **D4F 740**								
Engine: All engines	Information: x 1, D.I.S.									9.6418 C10		
1.2	Petrol	48	08/98-05/01	ENGINE **D4F 728**								
Engine: All engines	Information: x 1, D.I.S.									9.6418 C10		
1.2 BiFuel	LPG	44	03/98-10/01	ENGINE **D7F 722**								
Engine: All engines	Information: x 1, D.I.S.									9.6496 C10		
1.6	Petrol	58	07/00-10/03	ENGINE **K4M 734**								
Engine: All engines	Information: x 4, SAGEM, COIL ON PLUG									9.6332 C10		

A10	CONDENSER	**A20**	CONTACT SET	**A40**	DISTRIBUTOR CAP	**A50**	ROTOR	**A70**	PICK-UP
C10	COIL	**C20**	IGNITION MODULE	**C30**	ELECTRONIC IGNITION KIT	**E01**	IGNITION CABLE SET		

The present application list is a brief version. For the detailed information about the possibility of installation on a specific vehicle, please refer to our web-catalogue http://catalogo.facet.eu/

Vehicle	alim.	kW	Date	Engine	FUNCTIONS ON THE VEHICLE							
					A10	A20	A40	A50	A70	C10 - C30	C20	E01

CLIO I

				ENGINE
1.1	Petrol	34	01/91-09/98	C1E 700

Engine	Information	A10	A20	A40	A50	A70	C10 - C30		C20	E01
All engines	version Ducellier		1.3691/26	2.7654PHT	3.7691					

				ENGINE
1.1	Petrol	36	04/92-08/92	C1E 700

Engine	Information	A10	A20	A40	A50	A70	C10 - C30		C20	E01
All engines	version Ducellier		1.3691/26	2.7654PHT	3.7691					

				ENGINE
1.2	Petrol	40	06/90-09/98	C3G 720, D7F 730, E5F 716, E7F 706

Engine	Information	A10	A20	A40	A50	A70	C10 - C30		C20	E01
Eng. C3G 720	version Ducellier			2.7659PHT						
Eng. E5F 716, E7F 706	version Ducellier			2.7681PHT	3.7701					
Eng. E5F 716, E7F 706	version Marelli			2.8211PHT	3.8259					
Eng. C3G 720	distr. num. 525352A, version Ducellier				3.7688					
Eng. C3G 720	distr. num. 525352E, version Ducellier				3.7694					
Eng. E5F 716, E7F 706							9.6007	C10		4.8801
Eng. C3G 720							9.6128	C10		4.9497
Eng. D7F 730							9.6265	C10		4.9447

				ENGINE
1.2	Petrol	43	05/90-09/98	D7F 730, E7F 700, E7F 708, E7F 750

Engine	Information	A10	A20	A40	A50	A70	C10 - C30		C20	E01
Eng. E7F 700, E7F 708, E7F 750	version Ducellier			2.7681PHT	3.7701					
Eng. E7F 700, E7F 708, E7F 750	version Marelli			2.8211PHT	3.8259					
Eng. E7F 700, E7F 708, E7F 750							9.6007	C10		4.8801
Eng. D7F 730							9.6265	C10		4.9447

				ENGINE
1.2	Petrol	44	05/90-09/98	E5F 710, E7F 750

Engine	Information	A10	A20	A40	A50	A70	C10 - C30		C20	E01
All engines	version Ducellier			2.7681PHT	3.7701					
All engines	version Marelli			2.8211PHT	3.8259					
All engines							9.6007	C10		4.8801

				ENGINE
1.4	Petrol	55	06/90-09/98	E6J 718, E7J 756, E7J 757

Engine	Information	A10	A20	A40	A50	A70	C10 - C30		C20	E01
All engines	version Ducellier			2.7681PHT	3.7701					
All engines	version Marelli			2.8211PHT	3.8259					
All engines							9.6007	C10		4.8801

				ENGINE
1.4	Petrol	57	05/90-02/98	E6J 712, E6J 713

Engine	Information	A10	A20	A40	A50	A70	C10 - C30		C20	E01
All engines	version Ducellier			2.7681PHT	3.7701					
All engines	version Marelli			2.8211PHT	3.8259					
All engines							9.6007	C10		4.8801

				ENGINE
1.4	Petrol	58	01/91-09/98	E7J 601, E7J 718, E7J 719, E7J 754

Engine	Information	A10	A20	A40	A50	A70	C10 - C30		C20	E01
All engines	version Ducellier			2.7681PHT	3.7701					
All engines	version Marelli			2.8211PHT	3.8259					
All engines							9.6007	C10		4.8801

				ENGINE
1.4	Petrol	59	01/91-09/98	E7J 710, E7J 711

Engine	Information	A10	A20	A40	A50	A70	C10 - C30		C20	E01
All engines	version Ducellier			2.7681PHT	3.7701					
All engines	version Marelli			2.8211PHT	3.8259					
All engines							9.6007	C10		4.8801

A10	CONDENSER	A20	CONTACT SET	A40	DISTRIBUTOR CAP	A50	ROTOR	A70	PICK-UP
C10	COIL	C20	IGNITION MODULE	C30	ELECTRONIC IGNITION KIT	E01	IGNITION CABLE SET		

The present application list is a brief version. For the detailed information about the possibility of installation on a specific vehicle, please refer to our web-catalogue http://catalogo.facet.eu/

Vehicle	alim.	kW	Date	Engine	FUNCTIONS ON THE VEHICLE A10	A20	A40	A50	A70	C10 - C30	C20	E01
1.7	Petrol	68	01/91-12/93	F2N 770								
All engines	version Ducellier						2.7669PHT	3.7697				
All engines	Kit, version Ducellier						2.7672PHT					
All engines										9.6007	C10	4.8415
1.8	Petrol	65	01/91-09/98	F3P 710, F3P 714								
All engines	version Ducellier						2.7669PHT	3.7697				
All engines	spacer, version Ducellier						2.7670					
All engines	Kit, version Ducellier						2.7672PHT					
All engines										9.6007	C10	
1.8	Petrol	66	08/90-09/98	0HR10DE, F3P 754								
Eng. F3P 754	version Ducellier						2.7669PHT					
Eng. F3P 754	spacer, version Ducellier						2.7670					
Eng. F3P 754	Kit, version Ducellier						2.7672PHT					
Eng. 0HR10DE	version Ducellier						2.7685PHT					
Eng. 0HR10DE	Kit, version Ducellier						2.7686PHT					
All engines	version Ducellier							3.7697				
All engines										9.6007	C10	
1.8	Petrol	70	01/91-09/98	F3P 710								
All engines	version Ducellier						2.7669PHT	3.7697				
All engines	spacer, version Ducellier						2.7670					
All engines	Kit, version Ducellier						2.7672PHT					
All engines										9.6007	C10	
1.8 16V	Petrol	100	02/91-10/92	F7P 720								
All engines	distr. num. 525646, version Ducellier						2.7681PHT					
All engines	distr. num. 525645, version Ducellier						2.7682PHT					
All engines	distr. num. 525645, Kit, version Ducellier						2.7683PHT					
All engines	version Ducellier							3.7701				
All engines										9.6007	C10	4.8802
1.8 16V	Petrol	99	01/91-03/96	F7P 722								
All engines	distr. num. 525646, version Ducellier						2.7681PHT					
All engines	distr. num. 525645, version Ducellier						2.7682PHT					
All engines	distr. num. 525645, Kit, version Ducellier						2.7683PHT					
All engines	version Ducellier							3.7701				
All engines										9.6007	C10	4.8802
1.8 Rsi	Petrol	79	08/95-09/98	F3P 758								
All engines	version Ducellier						2.7669PHT	3.7697				
All engines	Kit, version Ducellier						2.7672PHT					
All engines										9.6007	C10	
1.8 Rsi	Petrol	80	01/93-08/95	F3P 712								
All engines	version Ducellier						2.7669PHT	3.7697				
All engines	Kit, version Ducellier						2.7672PHT					
All engines										9.6007	C10	
Williams	Petrol	108	01/94-09/98	F7R 700								
All engines	distr. num. 525646, version Ducellier						2.7681PHT					

A10	CONDENSER	A20	CONTACT SET	A40	DISTRIBUTOR CAP	A50	ROTOR	A70	PICK-UP
C10	COIL	C20	IGNITION MODULE	C30	ELECTRONIC IGNITION KIT	E01	IGNITION CABLE SET		

The present application list is a brief version. For the detailed information about the possibility of installation on a specific vehicle, please refer to our web-catalogue http://catalogo.facet.eu/

Vehicle	alim.	kW	Date	Engine	FUNCTIONS ON THE VEHICLE A10	A20	A40	A50	A70	C10 - C30	C20	E01
Williams	Petrol	108	01/94-09/98	**F7R 700**								

Engine	Information	A10	A20	A40	A50	A70	C10 - C30		C20	E01
All engines	distr. num. 525645, version Ducellier			2.7682PHT						
All engines	distr. num. 525645, Kit, version Ducellier			2.7683PHT						
All engines	version Ducellier				3.7701					
All engines							9.6007	C10		4.8802

CLIO II

				ENGINE
1.0	Petrol	40	02/00-05/01	**D7D 760**

Engine	Information	A10	A20	A40	A50	A70	C10 - C30		C20	E01
All engines	x 1, D.I.S.						9.6496	C10		
All engines										4.9681

				ENGINE
1.0 16V	Petrol	51	01/01->	**D4D 700**

Engine	Information	A10	A20	A40	A50	A70	C10 - C30		C20	E01
All engines							9.6319	C10		

				ENGINE
1.2	Petrol	43	03/98->	**D7F 710, D7F 720, D7F 722, D7F 726, D7F 744, D7F 746, D7F 764, D7F 766**

Engine	Information	A10	A20	A40	A50	A70	C10 - C30		C20	E01
Eng. D7F 710, D7F 722	->year 21/10/98						9.6265	C10		
Eng. D7F 720, D7F 726	->year 01/10/98, x 1, D.I.S., x 1, D.I.S.						9.6265	C10		
Eng. D7F 710, D7F 722, D7F 744, D7F 764	21/10/98 ->						9.6496	C10		
Eng. D7F 720, D7F 726, D7F 746, D7F 764, D7F 766	01/11/98 ->, x 1, D.I.S., x 1, D.I.S. x 1, D.I.S.						9.6496	C10		
Eng. D7F 710, D7F 720, D7F 722, D7F 726, D7F 766	->year 20/10/99									4.9447
All engines	20/10/99 ->									4.9681

				ENGINE
1.2	Petrol	44	03/99-10/03	**D7F 726, D7F 746**

Engine	Information	A10	A20	A40	A50	A70	C10 - C30		C20	E01
Eng. D7F 726	->year 21/10/98						9.6265	C10		
Eng. D7F 726	21/10/98 ->						9.6496	C10		
Eng. D7F 746	x 1, D.I.S.						9.6496	C10		
Eng. D7F 726	->year 20/10/99									4.9447
All engines	20/10/99 ->									4.9681

				ENGINE
1.2 16V	Petrol	55	06/01-08/16	**D4F 706, D4F 712, D4F 714, D4F 722, D4F 728**

Engine	Information	A10	A20	A40	A50	A70	C10 - C30		C20	E01
Eng. D4F 706, D4F 712, D4F 714	x 1, with cable, D.I.S.						9.6319	C10		
Eng. D4F 722, D4F 728	x 1, D.I.S.						9.6418	C10		
Eng. D4F 722, D4F 728										4.7246

				ENGINE
1.2 LPG	Petrol/ Liquified Petro-leum Gas (LPG)	43	09/98-06/09	**D7F 744, D7F 764, D7F 766**

Engine	Information	A10	A20	A40	A50	A70	C10 - C30		C20	E01
All engines	x 1, D.I.S.						9.6496	C10		
Eng. D7F 766	->year 20/10/99									4.9447
Eng. D7F 764, D7F 766	20/10/99 ->									4.9681

				ENGINE
1.2 LPG	Petrol/ Liquified Petro-leum Gas (LPG)	44	03/99-05/01	**D7F 722**

Engine	Information	A10	A20	A40	A50	A70	C10 - C30		C20	E01
All engines	->year 01/10/98, x 1, D.I.S.						9.6265	C10		
All engines	->year 20/10/99									4.9447
All engines	20/10/99 ->									4.9681

A10	CONDENSER	**A20**	CONTACT SET	**A40**	DISTRIBUTOR CAP	**A50**	ROTOR	**A70**	PICK-UP
C10	COIL	**C20**	IGNITION MODULE	**C30**	ELECTRONIC IGNITION KIT	**E01**	IGNITION CABLE SET		

The present application list is a brief version. For the detailed information about the possibility of installation on a specific vehicle, please refer to our web-catalogue http://catalogo.facet.eu/

Vehicle	alim.	kW	Date	Engine	FUNCTIONS ON THE VEHICLE A10	A20	A40	A50	A70	C10 - C30	C20	E01
1.4	Petrol	55	09/98-05/05	ENGINE E7J 634, E7J 635, E7J 780, K7J 700								
Eng. E7J 780	x 1, Colour:Black, D.I.S., connector type, saw teeth									9.6276 C10		
Eng. E7J 780	x 1, Colour:Grey, D.I.S., connector type, saw teeth									9.6278 C10		
Eng. E7J 634, E7J 635, K7J 700	x 1, D.I.S.									9.6496 C10		
Eng. E7J 634, K7J 700												4.7244
Eng. E7J 780												4.9443
1.4 16V	Petrol	70	10/99-09/04	ENGINE K4J 712, K4J 713								
All engines	x 4, SAGEM, COIL ON PLUG									9.6332 C10		
1.4 16V	Petrol	72	02/00->	ENGINE K4J 700, K4J 710, K4J 711, K4J 712, K4J 713, K4J 715								
Eng. K4J 700	Qty: 4									9.6332 C10		
Eng. K4J 710, K4J 711, K4J 712, K4J 713, K4J 715	x 4, SAGEM, COIL ON PLUG									9.6332 C10		
1.6	Petrol	66	09/98-05/05	ENGINE K7M 744, K7M 745, K7M 746								
Eng. K7M 744, K7M 745	x 1, Colour:Black, D.I.S., connector type, saw teeth									9.6276 C10		
Eng. K7M 744, K7M 745	x 1, Colour:Grey, D.I.S., connector type, saw teeth									9.6278 C10		
Eng. K7M 746	x 1, D.I.S.									9.6496 C10		
Eng. K7M 744, K7M 745												4.9443
1.6	Petrol	79	11/03->	ENGINE K4M 746								
All engines	x 4, SAGEM, COIL ON PLUG									9.6332 C10		
1.6 16V	Petrol	66	10/99->	ENGINE K4M 734								
All engines	Qty: 4									9.6332 C10		
1.6 16V	Petrol	79	09/98-04/05	ENGINE K4M 708, K4M 740, K4M 742, K4M 743, K4M 744, K4M 745, K4M 746, K4M 748								
All engines	x 4, SAGEM, COIL ON PLUG									9.6332 C10		
1.6 16V	Petrol	82	03/99-12/08	ENGINE K4M 708								
All engines	x 4, SAGEM, COIL ON PLUG									9.6332 C10		
1.6 Hi-Flex	Petrol/ Ethanol	86	01/05-02/10	ENGINE K4M 748								
All engines	x 4, SAGEM, COIL ON PLUG									9.6332 C10		
1.6i	Petrol	66	11/04->	ENGINE K4M 736								
All engines	Qty: 4									9.6332 C10		
2.0 16V	Petrol	124	06/01->	ENGINE F4R 732								
All engines	Qty: 4									9.6332 C10		

A10	CONDENSER	A20	CONTACT SET	A40	DISTRIBUTOR CAP	A50	ROTOR	A70	PICK-UP
C10	COIL	C20	IGNITION MODULE	C30	ELECTRONIC IGNITION KIT	E01	IGNITION CABLE SET		

The present application list is a brief version. For the detailed information about the possibility of installation on a specific vehicle, please refer to our web-catalogue http://catalogo.facet.eu/

Vehicle	alim.	kW	Date	Engine	FUNCTIONS ON THE VEHICLE: A10	A20	A40	A50	A70	C10 - C30	C20	E01
2.0 16V Sport	Petrol	124	02/00-06/09	**F4R 730, F4R 732, F4R 736**						9.6265 C10		
2.0 16V Sport	Petrol	132	01/04-04/05	**F4R 738**						9.6265 C10		

CLIO III

Engine	Information	A10	A20	A40	A50	A70	C10 - C30	C20	E01
1.2 Petrol 55 11/05-12/14 **D4F 740**									
All engines	x 1, D.I.S.						9.6418 C10		
1.2 Petrol 57 10/05-12/12 **D4F 764**									
All engines	x 1, D.I.S.						9.6418 C10		
All engines									4.7246
1.2 Petrol 74 11/07-12/11 **D4F 784**									
All engines	x 1, D.I.S.						9.6496 C10		
1.2 16V Petrol 43 06/06-08/10 **D4F 764**									
All engines	x 1, D.I.S.						9.6418 C10		
All engines									4.7246
1.2 16V Petrol 48 06/05-12/14 **D4F 740**									
All engines	x 1, D.I.S.						9.6418 C10		
All engines									4.7246
1.2 16V Petrol 55 06/05-12/14 **D4F 706, D4F 740, D4F 764**									
Eng. D4F 706							9.6319 C10		
Eng. D4F 740	x 1, D.I.S.						9.6418 C10		
Eng. D4F 764							9.6418 C10		
Eng. D4F 740, D4F 764									4.7246
1.2 16V Petrol 58 06/05-12/14 **D4F 764**									
All engines	x 1, D.I.S.						9.6418 C10		
All engines									4.7246
1.2 16V Petrol 74 05/07-12/14 **D4F 784**									
All engines	x 1, D.I.S.						9.6496 C10		
All engines									4.7229
1.2 16V Petrol 76 03/10-12/14 **D4F 786**									
All engines	x 1, D.I.S.						9.6496 C10		
All engines									4.7229
1.2 16V Hi-Flex Petrol/Ethanol 55 07/08-12/14 **D4F 740, D4F 744**									
Eng. D4F 740							9.6418 C10		4.7246
Eng. D4F 744	x 1, D.I.S.						9.6418 C10		

A10	CONDENSER	**A20**	CONTACT SET	**A40**	DISTRIBUTOR CAP	**A50**	ROTOR	**A70**	PICK-UP
C10	COIL	**C20**	IGNITION MODULE	**C30**	ELECTRONIC IGNITION KIT	**E01**	IGNITION CABLE SET		

The present application list is a brief version. For the detailed information about the possibility of installation on a specific vehicle, please refer to our web-catalogue http://catalogo.facet.eu/

Vehicle	alim.	kW	Date	Engine	FUNCTIONS ON THE VEHICLE A10	A20	A40	A50	A70	C10 - C30	C20	E01
1.2 16V Hi-Flex	Petrol/ Ethanol	58	11/07-12/12	**D4F 742**								

Engine	Information	A10	A20	A40	A50	A70	C10 - C30		C20	E01
All engines	x 1, D.I.S.						9.6418	C10		

1.2 16V Hi-Flex	Petrol/ Liquified Petro-leum Gas (LPG)	55	07/08-12/14	**D4F 740, D4F 742**								

Engine	Information	A10	A20	A40	A50	A70	C10 - C30		C20	E01
Eng. D4F 740							9.6418	C10		
Eng. D4F 742	x 1, D.I.S.						9.6418	C10		
All engines										4.7246

1.2 Ethanol	Petrol/ Ethanol	55	07/08-12/12	**D4F 742**								

Engine	Information	A10	A20	A40	A50	A70	C10 - C30		C20	E01
All engines	x 1, D.I.S.						9.6418	C10		

1.2 Hi-Flex	Petrol/ Ethanol	58	11/07-12/09	**D4F 742**								

Engine	Information	A10	A20	A40	A50	A70	C10 - C30		C20	E01
All engines	x 1, D.I.S.						9.6418	C10		

1.4 16V	Petrol	72	06/05-12/12	**K4J 780**								

Engine	Information	A10	A20	A40	A50	A70	C10 - C30		C20	E01
All engines	x 4, SAGEM, COIL ON PLUG						9.6332	C10		

1.6 16V	Petrol	65	06/05-10/07	**K4M 804**								

Engine	Information	A10	A20	A40	A50	A70	C10 - C30		C20	E01
All engines	x 4, SAGEM, COIL ON PLUG						9.6332	C10		

1.6 16V	Petrol	80	11/07-12/12	**K4M 804**								

Engine	Information	A10	A20	A40	A50	A70	C10 - C30		C20	E01
All engines	x 4, SAGEM, COIL ON PLUG						9.6332	C10		

1.6 16V	Petrol	82	06/05-12/14	**K4M 800, K4M 801**								

Engine	Information	A10	A20	A40	A50	A70	C10 - C30		C20	E01
All engines	x 4, SAGEM, COIL ON PLUG						9.6332	C10		

1.6 16V	Petrol	94	11/07-12/12	**K4M 862**								

Engine	Information	A10	A20	A40	A50	A70	C10 - C30		C20	E01
All engines	x 4, SAGEM, COIL ON PLUG						9.6332	C10		

1.6 16V GT	Petrol	94	06/09-12/14	**K4M 862**								

Engine	Information	A10	A20	A40	A50	A70	C10 - C30		C20	E01
All engines	x 4, SAGEM, COIL ON PLUG						9.6332	C10		

2.0 16V	Petrol	102	09/06-12/14	**M4R 700, M4R 701**								

Engine	Information	A10	A20	A40	A50	A70	C10 - C30		C20	E01
All engines	x 4, COIL ON PLUG						9.6389	C10		

2.0 16V Sport	Petrol	145	02/06-12/12	**F4R 830**								

Engine	Information	A10	A20	A40	A50	A70	C10 - C30		C20	E01
All engines	x 4, SAGEM, COIL ON PLUG						9.6332	C10		

2.0 16V Sport	Petrol	148	09/08->	**--, F4R 830, F4R 832**								

Engine	Information	A10	A20	A40	A50	A70	C10 - C30		C20	E01
Eng. --, F4R 830	Qty: 4						9.6332	C10		
Eng. F4R 832	x 4, SAGEM, COIL ON PLUG						9.6332	C10		

A10	CONDENSER	**A20**	CONTACT SET	**A40**	DISTRIBUTOR CAP	**A50**	ROTOR	**A70**	PICK-UP
C10	COIL	**C20**	IGNITION MODULE	**C30**	ELECTRONIC IGNITION KIT	**E01**	IGNITION CABLE SET		

The present application list is a brief version. For the detailed information about the possibility of installation on a specific vehicle, please refer to our web-catalogue http://catalogo.facet.eu/

Vehicle	alim.	kW	Date	Engine	FUNCTIONS ON THE VEHICLE A10	A20	A40	A50	A70	C10 - C30	C20	E01

CLIO IV

				ENGINE
0.9 TCe 75	Petrol	56	05/18->	H4B 408

Engine	Information	A10	A20	A40	A50	A70	C10 - C30		C20	E01
All engines	x 3, COIL ON PLUG						9.6513	C10		

				ENGINE
0.9 TCe 90	Petrol	66	11/12->	H4B 400, H4B 408

Engine	Information	A10	A20	A40	A50	A70	C10 - C30		C20	E01
All engines	x 3, COIL ON PLUG						9.6513	C10		
Eng. H4B 408	Qty: 3						9.6513	C10		

				ENGINE
0.9 TCe 90 LPG	Petrol/ Liquified Petro-leum Gas (LPG)	66	08/15->	H4B 410

Engine	Information	A10	A20	A40	A50	A70	C10 - C30		C20	E01
All engines	x 3, COIL ON PLUG						9.6513	C10		

				ENGINE
1.2 16V	Petrol	54	11/12->	D4F 740, D4F 744

Engine	Information	A10	A20	A40	A50	A70	C10 - C30		C20	E01
Eng. D4F 744							9.6418	C10		4.7246
Eng. D4F 740	x 1, D.I.S.						9.6418	C10		

				ENGINE
1.2 16V	Petrol	55	06/15->	D4F 740

Engine	Information	A10	A20	A40	A50	A70	C10 - C30		C20	E01
All engines	x 1, D.I.S.						9.6418	C10		

				ENGINE
1.2 16V LPG	Petrol/ Liquified Petro-leum Gas (LPG)	53	01/14->	D4F 744

Engine	Information	A10	A20	A40	A50	A70	C10 - C30		C20	E01
All engines	x 1, D.I.S.						9.6418	C10		

				ENGINE
1.2 LPG	Petrol/ Liquified Petro-leum Gas (LPG)	53	01/14->	D4F 744

Engine	Information	A10	A20	A40	A50	A70	C10 - C30		C20	E01
All engines	x 1, D.I.S.						9.6418	C10		

				ENGINE
1.2 LPG 16V	Petrol/ Liquified Petro-leum Gas (LPG)	54	11/12-06/15	D4F 744

Engine	Information	A10	A20	A40	A50	A70	C10 - C30		C20	E01
All engines	x 1, D.I.S.						9.6418	C10		

				ENGINE
1.2 TCe 120	Petrol	87	01/16->	H5F 408, H5F 412

Engine	Information	A10	A20	A40	A50	A70	C10 - C30		C20	E01
All engines	x 4, COIL ON PLUG						9.6513	C10		

				ENGINE
1.2 TCe 120	Petrol	88	03/13->	H5F 403, H5F 412

Engine	Information	A10	A20	A40	A50	A70	C10 - C30		C20	E01
All engines	x 4, COIL ON PLUG						9.6513	C10		

				ENGINE
1.6 RS	Petrol	147	03/13->	M5M 400, M5M 401

Engine	Information	A10	A20	A40	A50	A70	C10 - C30		C20	E01
All engines	x 4, COIL ON PLUG						9.6451	C10		

				ENGINE
1.6 RS Trophy	Petrol	162	03/15->	M5M 401

Engine	Information	A10	A20	A40	A50	A70	C10 - C30		C20	E01
All engines	x 4, COIL ON PLUG						9.6451	C10		

A10	CONDENSER	A20	CONTACT SET	A40	DISTRIBUTOR CAP	A50	ROTOR	A70	PICK-UP
C10	COIL	C20	IGNITION MODULE	C30	ELECTRONIC IGNITION KIT	E01	IGNITION CABLE SET		

The present application list is a brief version. For the detailed information about the possibility of installation on a specific vehicle, please refer to our web-catalogue http://catalogo.facet.eu/

Vehicle	alim.	kW	Date	Engine	FUNCTIONS ON THE VEHICLE A10	A20	A40	A50	A70	C10 - C30	C20	E01
CLIO V												
1.0 LPG	Petrol/ Liquified Petro-leum Gas (LPG)	74	06/19->	ENGINE: H4D 450, H4D 452, H4D 460								
Engine: All engines	Information: x 3, COIL ON PLUG									9.6452 C10		
1.0 TCe 100	Petrol	74	06/19->	ENGINE: H4D 450, H4D 452, H4D 460								
Engine: All engines	Information: x 3, COIL ON PLUG									9.6452 C10		
TCe 90	Petrol	67	08/20->	ENGINE: H4D 450, H4D470								
Engine: All engines	Information: x 3, COIL ON PLUG									9.6452 C10		
DOKKER												
1.6	Petrol	59	12/13->	ENGINE: K7M 812								
Engine: All engines	Information: x 1, D.I.S.									9.6496 C10		
DUSTER												
1.6 16V	Petrol	75	02/12->	ENGINE: K4M 616								
Engine: All engines	Information: x 4, SAGEM, COIL ON PLUG									9.6332 C10		
1.6 16V	Petrol	84	06/15->	ENGINE: H4M 438								
Engine: All engines	Information: x 4, COIL ON PLUG									9.6513 C10		
1.6 16V 4x4	Petrol	75	06/11-05/15	ENGINE: K4M 490, K4M 606, K4M 646, K4M 690								
Engine: All engines	Information: x 4, SAGEM, COIL ON PLUG									9.6332 C10		
1.6 16V 4x4	Petrol	84	06/15->	ENGINE: H4M 430								
Engine: All engines	Information: x 4, COIL ON PLUG									9.6513 C10		
2.0	Petrol	98	02/12->	ENGINE: F4R 403, F4R 405								
Engine: All engines	Information: x 4, SAGEM, COIL ON PLUG									9.6332 C10		
2.0 4x4	Petrol	105	10/11->	ENGINE: F4R 410, F4R 412								
Engine: All engines	Information: x 4, SAGEM, COIL ON PLUG									9.6332 C10		
2.0 4x4	Petrol	99	02/12->	ENGINE: F4R 400, F4R 402, F4R401								
Engine: All engines	Information: x 4, SAGEM, COIL ON PLUG									9.6332 C10		
ESPACE I												
2.0	Petrol	74	01/88-12/90	ENGINE: 53AZ-FXE								
Engine: All engines	Information: version Ducellier						2.7679PHT	3.7694				
Engine: All engines	Information: info S100600201, info S100600243, info S100620001, info S100940201, info S100940220, info S100948002, info S101910201, info S101910220, info S101910243, info S102020001, info S102030002									9.6007 C10		

A10	CONDENSER	A20	CONTACT SET	A40	DISTRIBUTOR CAP	A50	ROTOR	A70	PICK-UP
C10	COIL	C20	IGNITION MODULE	C30	ELECTRONIC IGNITION KIT	E01	IGNITION CABLE SET		

The present application list is a brief version. For the detailed information about the possibility of installation on a specific vehicle, please refer to our web-catalogue http://catalogo.facet.eu/

FUNCTIONS ON THE VEHICLE

Vehicle	alim.	kW	Date	Engine	A10	A20	A40	A50	A70	C10 - C30		C20	E01
2.0	Petrol	80	07/84-12/90	ENGINE J6R 234, J6R 236									
Engine			Information		A10	A20	A40	A50	A70	C10 - C30		C20	E01
All engines			version Ducellier				2.7679PHT	3.7694					
All engines										9.6007	C10		
2.0 i	Petrol	87	01/89-12/90	ENGINE J7R 760									
Engine			Information		A10	A20	A40	A50	A70	C10 - C30		C20	E01
All engines			Kit, version Ducellier				2.7688						
All engines										9.6007	C10		4.8539
2.0 i Quadra	Petrol	87	03/88-12/92	ENGINE J7R 760									
Engine			Information		A10	A20	A40	A50	A70	C10 - C30		C20	E01
All engines			Kit, version Ducellier				2.7688						
All engines										9.6007	C10		4.8539
2.2	Petrol	79	07/86-12/90	ENGINE 2QG15DE									
Engine			Information		A10	A20	A40	A50	A70	C10 - C30		C20	E01
All engines			Kit, version Ducellier				2.7688						
All engines													4.8539
2.2 Quadra	Petrol	79	01/88-12/90	ENGINE 2QG15DE									
Engine			Information		A10	A20	A40	A50	A70	C10 - C30		C20	E01
All engines			Kit, version Ducellier				2.7688						
All engines													4.8539

ESPACE II

Vehicle	alim.	kW	Date	Engine	A10	A20	A40	A50	A70	C10 - C30		C20	E01
2.0	Petrol	76	01/91-10/96	ENGINE J7R 768									
Engine			Information		A10	A20	A40	A50	A70	C10 - C30		C20	E01
All engines							2.7665PHT			9.6007	C10		4.8539
All engines			version Ducellier				2.7666PHT	3.7694					
2.2	Petrol	79	01/91-10/96	ENGINE J7T 772, J7T 773, J7T 776									
Engine			Information		A10	A20	A40	A50	A70	C10 - C30		C20	E01
Eng. J7T 772			version Ducellier				2.7659PHT	3.7694					
All engines							2.7665PHT			9.6007	C10		
Eng. J7T 776			version Ducellier				2.7666PHT						
Eng. J7T 773, J7T 776													4.8539
2.2 4x4	Petrol	79	03/91-12/96	ENGINE J7T 772, J7T 773									
Engine			Information		A10	A20	A40	A50	A70	C10 - C30		C20	E01
Eng. J7T 772			version Ducellier				2.7659PHT	3.7694					
All engines										9.6007	C10		
Eng. J7T 773													4.8539
2.8 V6	Petrol	110	01/91-10/96	ENGINE Z7W 712, Z7W 713, Z7W 717									
Engine			Information		A10	A20	A40	A50	A70	C10 - C30		C20	E01
All engines			version Bosch				2.7530/6PHT	3.7573/19RS					
All engines										9.6007	C10		

ESPACE III

Vehicle	alim.	kW	Date	Engine	A10	A20	A40	A50	A70	C10 - C30		C20	E01
2.0	Petrol	102	09/01-10/02	ENGINE F4R 700, F4R 701									
Engine			Information		A10	A20	A40	A50	A70	C10 - C30		C20	E01
All engines			x 4, SAGEM, COIL ON PLUG							9.6332	C10		
2.0	Petrol	84	11/96-10/00	ENGINE F3R 728, F3R 729, F3R 742, F3R 768, F3R 769									
Engine			Information		A10	A20	A40	A50	A70	C10 - C30		C20	E01
All engines			01/05/97 ->, x 1, D.I.S., connector type, saw teeth							9.6096	C10		
Eng. F3R 728, F3R 729, F3R 768, F3R 769			->year 01/04/97, x 1, D.I.S.							9.6175	C10		

A10	CONDENSER	A20	CONTACT SET	A40	DISTRIBUTOR CAP	A50	ROTOR	A70	PICK-UP
C10	COIL	C20	IGNITION MODULE	C30	ELECTRONIC IGNITION KIT	E01	IGNITION CABLE SET		

The present application list is a brief version. For the detailed information about the possibility of installation on a specific vehicle, please refer to our web-catalogue http://catalogo.facet.eu/

Vehicle	alim.	kW	Date	Engine	FUNCTIONS ON THE VEHICLE A10	A20	A40	A50	A70	C10 - C30	C20	E01
2.0	Petrol	84	11/96-10/00	ENGINE F3R 728, F3R 729, F3R 742, F3R 768, F3R 769								
Engine: All engines	Information: 02/04/97 ->											4.9492
Engine: Eng. F3R 728, F3R 768, F3R 769	Information: ->year 02/04/97											4.9501
2.0 16V	Petrol	103	10/98-10/02	ENGINE F4R 700, F4R 701								
Engine: All engines	Information: x 4, SAGEM, COIL ON PLUG									9.6332 C10		
3.0	Petrol	123	11/96-10/98	ENGINE Z7X 775								
Engine: All engines	Information: Fitting Position:for cylinder 1-2, x 1, D.I.S.									9.6175 C10		
Engine: All engines	Information: Fitting Position:for cylinder 3-4, x 1, D.I.S.									9.6176 C10		
ESPACE IV												
2.0	Petrol	100	11/02-01/15	ENGINE F4R 792								
Engine: All engines	Information: x 4, SAGEM, COIL ON PLUG									9.6332 C10		
2.0	Petrol	125	04/05->	ENGINE F4R 794, F4R 795, F4R 796, F4R 797, F4R 896, F4R 897								
Engine: All engines	Information: x 4, SAGEM, COIL ON PLUG									9.6332 C10		
2.0	Petrol	98	11/02-12/15	ENGINE F4R 790								
Engine: All engines	Information: x 4, SAGEM, COIL ON PLUG									9.6332 C10		
2.0 Turbo	Petrol	120	11/02->	ENGINE F4R 794, F4R 795, F4R 796, F4R 797								
Engine: All engines	Information: x 4, SAGEM, COIL ON PLUG									9.6332 C10		
ESPACE V												
1.6 TCe 200	Petrol	147	02/15->	ENGINE M5M 450								
Engine: All engines	Information: x 4, COIL ON PLUG									9.6451 C10		
1.8 TCe 225	Petrol	165	10/16->	ENGINE 5TZ175X15DYA, M5P 403								
Engine: All engines	Information: x 4, COIL ON PLUG									9.6451 C10		
EXPRESS												
1.2	Petrol	40	07/95-10/99	ENGINE C3G 710, C3G 712								
Engine: All engines	Information: x 1, DISTRIBUTOR									9.6128 C10		
1.4i	Petrol	0	01/85-10/90	ENGINE C3G/C3J								
Engine: All engines	Information: version Ducellier						2.7659PHT					
Engine: All engines	Information: distr. num. 525 352 A/B, version Ducellier							3.7688				
Engine: All engines	Information: distr. num. 525 352 C/D, version Ducellier							3.7694				
Engine: All engines	Information:									9.6128 C10		4.8543
FLUENCE												
1.6	Petrol	86	01/13->	ENGINE H4M 729								
Engine: All engines	Information: Qty: 4									9.6452 C10		

A10	CONDENSER	A20	CONTACT SET	A40	DISTRIBUTOR CAP	A50	ROTOR	A70	PICK-UP
C10	COIL	C20	IGNITION MODULE	C30	ELECTRONIC IGNITION KIT	E01	IGNITION CABLE SET		

The present application list is a brief version. For the detailed information about the possibility of installation on a specific vehicle, please refer to our web-catalogue http://catalogo.facet.eu/

Vehicle	alim.	kW	Date	Engine	FUNCTIONS ON THE VEHICLE							
					A10	A20	A40	A50	A70	C10 - C30	C20	E01
1.6 16V	Petrol	78	02/10->	K4M 838								
Engine: All engines — Information: x 4, SAGEM, COIL ON PLUG										9.6332 C10		
1.6 16V	Petrol	81	02/10->	K4M 838, K4M 839								
Engine: All engines — Information: x 4, SAGEM, COIL ON PLUG										9.6332 C10		
1.6 LPG 16V	Petrol/ Liquified Petro-leum Gas (LPG)	81	01/12->	K4M 839								
Engine: All engines — Information: x 4, SAGEM, COIL ON PLUG										9.6332 C10		
FUEGO												
1.6 [USA] R1368	Petrol	0	01/82-12/84	A7L 752								
Engine: All engines — Information: version Bosch							2.7494PHT	3.7512RS				
Engine: All engines — Information: version Ducellier							2.7654PHT	3.7691				
GRAND SCÉNIC II												
1.6	Petrol	77	06/06-11/08	K4M 788								
Engine: All engines — Information: x 4, SAGEM, COIL ON PLUG										9.6332 C10		
1.6	Petrol	82	06/06-11/08	K4M 812, K4M 813								
Engine: All engines — Information: x 4, SAGEM, COIL ON PLUG										9.6332 C10		
1.6	Petrol	83	04/04-08/06	K4M 761, K4M 764, K4M 782, K4M 812, K4M 813								
Engine: All engines — Information: x 4, SAGEM, COIL ON PLUG										9.6332 C10		
1.6 Flex	Petrol/ Ethanol	82	06/06-06/09	K4M 766								
Engine: All engines — Information: x 4, SAGEM, COIL ON PLUG										9.6332 C10		
2.0	Petrol	120	04/04-06/09	F4R 776								
Engine: All engines — Information: x 4, SAGEM, COIL ON PLUG										9.6332 C10		
2.0	Petrol	99	04/04-06/09	F4R 770, F4R 771								
Engine: All engines — Information: x 4, SAGEM, COIL ON PLUG										9.6332 C10		
GRAND SCÉNIC III												
1.2 TCe	Petrol	85	04/12->	H5F 400, H5F 408								
Engine: All engines — Information: x 4, COIL ON PLUG										9.6513 C10		
1.2 TCe	Petrol	96	07/14->	H5F 408								
Engine: All engines — Information: x 4, COIL ON PLUG										9.6513 C10		
1.2 TCe	Petrol	97	01/13->	H5F 404, H5F 408								
Engine: All engines — Information: x 4, COIL ON PLUG										9.6513 C10		

A10	CONDENSER	A20	CONTACT SET	A40	DISTRIBUTOR CAP	A50	ROTOR	A70	PICK-UP
C10	COIL	C20	IGNITION MODULE	C30	ELECTRONIC IGNITION KIT	E01	IGNITION CABLE SET		

The present application list is a brief version. For the detailed information about the possibility of installation on a specific vehicle, please refer to our web-catalogue http://catalogo.facet.eu/

Vehicle	alim.	kW	Date	Engine	FUNCTIONS ON THE VEHICLE A10	A20	A40	A50	A70	C10 - C30	C20	E01
1.6 16V	Petrol	81	02/09->	ENGINE K4M 858								
Engine: All engines	Information: x 4, SAGEM, COIL ON PLUG									9.6332 C10		
1.6 16V Bifuel	Petrol/ Liquified Petro-leum Gas (LPG)	79	04/12->	ENGINE K4M 866								
Engine: All engines	Information: x 4, SAGEM, COIL ON PLUG									9.6332 C10		
1.6 16V Bifuel	Petrol/ Liquified Petro-leum Gas (LPG)	81	02/09->	ENGINE K4M 866								
Engine: All engines	Information: x 4, SAGEM, COIL ON PLUG									9.6332 C10		
1.6 E85	Petrol/ Ethanol	81	02/09->	ENGINE K4M 866								
Engine: All engines	Information: x 4, SAGEM, COIL ON PLUG									9.6332 C10		
GRAND SCÉNIC IV												
1.2 TCe 115	Petrol	85	09/16->	ENGINE H5F 408								
Engine: All engines	Information: x 4, COIL ON PLUG									9.6513 C10		
1.2 TCe 130	Petrol	96	09/16->	ENGINE H5F 408								
Engine: All engines	Information: x 4, COIL ON PLUG									9.6513 C10		
KADJAR												
1.2 TCe 130	Petrol	96	06/15->	ENGINE H5F 408								
Engine: All engines	Information: x 4, COIL ON PLUG									9.6513 C10		
1.6 TCe 165	Petrol	120	11/16->	ENGINE M5M460								
Engine: All engines	Information: x 4, COIL ON PLUG									9.6451 C10		
KANGOO												
1.2	Petrol	43	07/01-10/03	ENGINE D4F 712, D4F 714								
Engine: All engines	Information: x 1, with cable, D.I.S.									9.6319 C10		
1.2	Petrol	44	12/01-06/03	ENGINE D7F 746								
Engine: All engines	Information: x 1, D.I.S.									9.6496 C10		
1.2 BiFuel	LPG	44	06/97-06/03	ENGINE D7F 710, D7F 722, D7F 744, D7F 764, D7F 766								
Engine: All engines	Information: ->year 01/10/98, x 1, D.I.S.									9.6265 C10		
Engine: All engines	Information: 01/11/98 ->, x 1, D.I.S.									9.6496 C10		
1.6	Petrol	74	03/13->	ENGINE K4M 836								
Engine: All engines	Information: x 4, SAGEM, COIL ON PLUG									9.6332 C10		

A10	CONDENSER	**A20**	CONTACT SET	**A40**	DISTRIBUTOR CAP	**A50**	ROTOR	**A70**	PICK-UP
C10	COIL	**C20**	IGNITION MODULE	**C30**	ELECTRONIC IGNITION KIT	**E01**	IGNITION CABLE SET		

Vehicle	alim.	kW	Date	Engine	FUNCTIONS ON THE VEHICLE A10	A20	A40	A50	A70	C10 - C30	C20	E01
1.6 BiFuel	LPG	60	06/05-06/08	**K4M 750**								

Engine	Information	A10	A20	A40	A50	A70	C10 - C30	C20	E01
All engines	x 4, SAGEM, COIL ON PLUG						9.6332 C10		

1.6 CNG	CNG	78	10/07->	**K4M 830**									

Engine	Information	A10	A20	A40	A50	A70	C10 - C30	C20	E01
All engines	x 4, SAGEM, COIL ON PLUG						9.6332 C10		

KANGOO I

1.0	Petrol	40	07/03->	**D7D 700**									

Engine	Information	A10	A20	A40	A50	A70	C10 - C30	C20	E01
All engines							9.6496 C10		4.9681

1.0	Petrol	43	01/02-01/07	**D7D 700**									

Engine	Information	A10	A20	A40	A50	A70	C10 - C30	C20	E01
All engines	x 1, D.I.S.						9.6496 C10		

1.0	Petrol	50	01/02-01/07	**D4D 700, D4D 720**									

Engine	Information	A10	A20	A40	A50	A70	C10 - C30	C20	E01
All engines	x 1, with cable, D.I.S.						9.6319 C10		

1.0 16V	Petrol	51	03/98->	**59CH23N17, D4D 700**									

Engine	Information	A10	A20	A40	A50	A70	C10 - C30	C20	E01
All engines							9.6319 C10		

1.0 RN	Petrol	43	01/02-01/07	**D7D 700, D7D 760**									

Engine	Information	A10	A20	A40	A50	A70	C10 - C30	C20	E01
All engines	x 1, D.I.S.						9.6496 C10		

1.2	Petrol	43	08/97->	**D7F 710, D7F 720, D7F 722, D7F 726, D7F 744, D7F 746**									

Engine	Information	A10	A20	A40	A50	A70	C10 - C30	C20	E01
Eng. D7F 710, D7F 722, D7F 744	->year 21/10/98						9.6265 C10		
Eng. D7F 720, D7F 726, D7F 746	->year 01/10/98, x 1, D.I.S.						9.6265 C10		
Eng. D7F 710, D7F 722, D7F 744	21/10/98 ->						9.6496 C10		
Eng. D7F 720, D7F 726, D7F 746	01/11/98 ->, x 1, D.I.S.						9.6496 C10		
All engines	->year 02/10/99								4.9447
All engines	02/10/99 ->								4.9681

1.2	Petrol	44	07/98-07/01	**D7F 710, D7F 722, D7F 744, D7F 764, D7F 766**									

Engine	Information	A10	A20	A40	A50	A70	C10 - C30	C20	E01
All engines	->year 01/10/98, x 1, D.I.S.						9.6265 C10		
All engines	01/11/98 ->, x 1, D.I.S.						9.6496 C10		

1.2 16V	Petrol	55	06/01->	**D4F 712, D4F 714, D4F 716, D4F 730**									

Engine	Information	A10	A20	A40	A50	A70	C10 - C30	C20	E01
Eng. D4F 712, D4F 714, D4F 716	x 1, with cable, x 1, D.I.S., with cable, D.I.S.						9.6319 C10		
Eng. D4F 730	x 1, D.I.S.						9.6418 C10		

1.2 BiFuel	Petrol/ Liquified Petro-leum Gas (LPG)	43	07/98-07/01	**D7F 710, D7F 744**									

Engine	Information	A10	A20	A40	A50	A70	C10 - C30	C20	E01
All engines	->year 01/10/98, x 1, D.I.S.						9.6265 C10		
All engines	01/11/98 ->, x 1, D.I.S.						9.6496 C10		

A10	CONDENSER	**A20**	CONTACT SET	**A40**	DISTRIBUTOR CAP	**A50**	ROTOR	**A70**	PICK-UP
C10	COIL	**C20**	IGNITION MODULE	**C30**	ELECTRONIC IGNITION KIT	**E01**	IGNITION CABLE SET		

The present application list is a brief version. For the detailed information about the possibility of installation on a specific vehicle, please refer to our web-catalogue http://catalogo.facet.eu/

Vehicle	alim.	kW	Date	Engine	FUNCTIONS ON THE VEHICLE A10	A20	A40	A50	A70	C10 - C30	C20	E01
1.4	Petrol	55	08/97->	E7J 634, E7J 635, E7J 780, K7J 700, K7J 701								
Eng. E7J 780				Kangoo Rapid, x 1, Colour:Black, x 1, Colour:Black, D.I.S., connector type, saw teeth, D.I.S., connector type, saw teeth						9.6276 C10		
Eng. E7J 780				Kangoo Rapid, x 1, Colour:Grey, x 1, Colour:Grey, D.I.S., connector type, saw teeth, D.I.S., connector type, saw teeth						9.6278 C10		
Eng. E7J 634, E7J 635, K7J 700, K7J 701				x 1, D.I.S. --- x 1, D.I.S., Kangoo Rapid, x 1, D.I.S.						9.6496 C10		
Eng. E7J 634, E7J 635, K7J 700, K7J 701												4.7244
Eng. E7J 780												4.9443
1.6	Petrol	66	09/99-06/01	K7M 746								
All engines				x 1, D.I.S.						9.6496 C10		
All engines												4.7244
1.6 16V	Petrol	70	06/01->	K4M 708, K4M 730, K4M 732, K4M 750, K4M 752, K4M 753, K4M 754								
All engines				Kangoo Rapid, x 4, SAGEM, x 4, COIL ON PLUG, SAGEM, COIL ON PLUG						9.6332 C10		
1.6 16V 4x4	Petrol	70	02/01->	K4M 708, K4M 750, K4M 752, K4M 753, K4M 754								
Eng. K4M 708, K4M 752, K4M 753				Qty: 4						9.6332 C10		
Eng. K4M 750, K4M 752, K4M 753, K4M 754				Kangoo Rapid, x 4, SAGEM, x 4, COIL ON PLUG, SAGEM, COIL ON PLUG						9.6332 C10		
1.6 16V bivalent	Petrol/ Com-pressed Natural Gas (CNG)	60	06/05->	K4M850CNG								
All engines				Kangoo Rapid, x 4, SAGEM, x 4, COIL ON PLUG, SAGEM, COIL ON PLUG						9.6332 C10		
1.6 Flex	Petrol/ Ethanol	72	03/07-12/18	K4M 850								
All engines				x 4, SAGEM, COIL ON PLUG						9.6332 C10		
KANGOO II												
1.2 TCe 115	Petrol	84	07/13->	H5F 400, H5F 408, H5F 412								
All engines				x 4, COIL ON PLUG						9.6513 C10		
1.6	Petrol	64	02/08->	K7M 750								
All engines				x 1, D.I.S.						9.6496 C10		
All engines												4.7252
1.6	Petrol	78	02/09-12/12	K4M 830, K4M 831								
All engines				x 4, SAGEM, COIL ON PLUG						9.6332 C10		
1.6 16V	Petrol	78	02/08->	K4M 830, K4M 831, K4M 834, K4M 835, K4M 836								
All engines				x 4, SAGEM, COIL ON PLUG						9.6332 C10		

A10	CONDENSER	A20	CONTACT SET	A40	DISTRIBUTOR CAP	A50	ROTOR	A70	PICK-UP
C10	COIL	C20	IGNITION MODULE	C30	ELECTRONIC IGNITION KIT	E01	IGNITION CABLE SET		

The present application list is a brief version. For the detailed information about the possibility of installation on a specific vehicle, please refer to our web-catalogue http://catalogo.facet.eu/

Vehicle	alim.	kW	Date	Engine	FUNCTIONS ON THE VEHICLE: A10	A20	A40	A50	A70	C10 - C30	C20	E01
1.6 16V FLEX	Petrol/ Ethanol	78	02/08->	K4M 834								

Engine	Information	A10	A20	A40	A50	A70	C10 - C30	C20	E01
All engines	x 4, SAGEM, COIL ON PLUG						9.6332 C10		

1.6 16V LPG	Petrol/ Liquified Petro-leum Gas (LPG)	78	02/08->	K4M 834, K4M 835, K4M 836								

Engine	Information	A10	A20	A40	A50	A70	C10 - C30	C20	E01
All engines	x 4, SAGEM, COIL ON PLUG						9.6332 C10		

KAPTUR

1.6	Petrol	84	03/16->	H4M 429, H4M 438								

Engine	Information	A10	A20	A40	A50	A70	C10 - C30	C20	E01
All engines	x 4, COIL ON PLUG						9.6513 C10		

2.0 4WD	Petrol	105	03/16->	F4R 410								

Engine	Information	A10	A20	A40	A50	A70	C10 - C30	C20	E01
All engines	x 4, SAGEM, COIL ON PLUG						9.6332 C10		

KOLEOS

2.0 TCe	Petrol	107	08/16->	M5R 402								

Engine	Information	A10	A20	A40	A50	A70	C10 - C30	C20	E01
All engines	x 4, COIL ON PLUG						9.6451 C10		

2.5	Petrol	126	09/08->	2TR 700, 2TR 701, 2TR 703, 2TR 705, 2TR702								

Engine	Information	A10	A20	A40	A50	A70	C10 - C30	C20	E01
Eng. 2TR 700, 2TR 703, 2TR 705, 2TR702	x 4, COIL ON PLUG						9.6452 C10		
Eng. 2TR 701, 2TR 705	Qty: 4						9.6452 C10		

2.5 4x4	Petrol	126	09/08->	2TR 700, 2TR 701, 2TR 703, 2TR 705, 2TR702								

Engine	Information	A10	A20	A40	A50	A70	C10 - C30	C20	E01
Eng. 2TR 700, 2TR 703, 2TR 705, 2TR702	x 4, COIL ON PLUG						9.6452 C10		
Eng. 2TR 701	Qty: 4						9.6452 C10		

2.5 Sce 4WD	Petrol	126	08/16->	2TR707								

Engine	Information	A10	A20	A40	A50	A70	C10 - C30	C20	E01
All engines	x 4, COIL ON PLUG						9.6452 C10		

LAGUNA I

1.6 16V	Petrol	79	11/97-03/01	K4M 720, K4M 724								

Engine	Information	A10	A20	A40	A50	A70	C10 - C30	C20	E01
All engines	Qty: 4						9.6332 C10		

1.8	Petrol	66	11/93-03/01	F3P 670, F3P 678, F3P 720, F3P 724								

Engine	Information	A10	A20	A40	A50	A70	C10 - C30	C20	E01
Eng. F3P 678, F3P 720, F3P 724	version Ducellier			2.7685PHT	3.7697				
Eng. F3P 678, F3P 720, F3P 724	Kit, version Ducellier			2.7686PHT					
Eng. F3P 678, F3P 720, F3P 724							9.6007 C10		
Eng. F3P 670	02/04/97 ->, Qty: 2						9.6096 C10		
Eng. F3P 670	->year 02/04/97, Qty: 2						9.6175 C10		
Eng. F3P 678, F3P 720, F3P 724	->year 02/05/95								4.8920
Eng. F3P 670	02/04/97 ->								4.9492
Eng. F3P 678, F3P 720, F3P 724	02/05/95 ->								4.9499
Eng. F3P 670	->year 02/04/97								4.9501

A10	CONDENSER	A20	CONTACT SET	A40	DISTRIBUTOR CAP	A50	ROTOR	A70	PICK-UP
C10	COIL	C20	IGNITION MODULE	C30	ELECTRONIC IGNITION KIT	E01	IGNITION CABLE SET		

The present application list is a brief version. For the detailed information about the possibility of installation on a specific vehicle, please refer to our web-catalogue http://catalogo.facet.eu/

Vehicle	alim.	kW	Date	Engine	FUNCTIONS ON THE VEHICLE							
					A10	A20	A40	A50	A70	C10 - C30	C20	E01
1.8	Petrol	69	06/95-03/01	ENGINE: F3P 674, F3P 720, F3P 724								

Engine	Information	A10	A20	A40	A50	A70	C10 - C30	C20	E01
Eng. F3P 720, F3P 724	version Ducellier			2.7685PHT	3.7697				
Eng. F3P 720, F3P 724	Kit, version Ducellier			2.7686PHT					
Eng. F3P 720, F3P 724							9.6007 C10		
Eng. F3P 674	02/04/97 ->, Qty: 2						9.6096 C10		
Eng. F3P 674	->year 02/04/97, Qty: 2						9.6175 C10		
Eng. F3P 720, F3P 724	->year 02/05/95								4.8920
Eng. F3P 674	02/04/97 ->								4.9492
Eng. F3P 720, F3P 724	02/05/95 ->								4.9499
Eng. F3P 674	->year 02/04/97								4.9501

1.8	Petrol	70	06/95-06/98	ENGINE: F3P 676, F3P 678

Engine	Information	A10	A20	A40	A50	A70	C10 - C30	C20	E01
All engines	02/04/97 ->, Qty: 2						9.6096 C10		
All engines	->year 02/04/97, Qty: 2						9.6175 C10		
All engines	02/04/97 ->								4.9492
All engines	->year 02/04/97								4.9501

1.8 16V	Petrol	88	04/98-03/01	ENGINE: F4P 760

Engine	Information	A10	A20	A40	A50	A70	C10 - C30	C20	E01
All engines	Qty: 4						9.6332 C10		

2.0	Petrol	102	09/99-02/01	ENGINE: F4R 780

Engine	Information	A10	A20	A40	A50	A70	C10 - C30	C20	E01
All engines	Qty: 4						9.6332 C10		

2.0	Petrol	103	06/95-02/01	ENGINE: N7Q 700, N7Q 704

Engine	Information	A10	A20	A40	A50	A70	C10 - C30	C20	E01
All engines	Colour:Black						9.6255 C10		
All engines	Colour:Grey						9.6256 C10		
All engines									4.7061

2.0	Petrol	70	11/93-03/01	ENGINE: --, F3R 769

Engine	Information	A10	A20	A40	A50	A70	C10 - C30	C20	E01
Eng. --	02/04/97 ->, Qty: 2						9.6096 C10		
Eng. --	->year 02/04/97, Qty: 2						9.6175 C10		
All engines	02/04/97 ->								4.9492
All engines	->year 02/04/97								4.9501

2.0	Petrol	80	03/99-03/01	ENGINE: F3R 611

Engine	Information	A10	A20	A40	A50	A70	C10 - C30	C20	E01
All engines	02/04/97 ->, Qty: 2						9.6096 C10		
All engines	->year 02/04/97, Qty: 2						9.6175 C10		
All engines									4.9492

2.0	Petrol	83	11/93-03/01	ENGINE: 6Z7U 730, F3R 722, F3R 729

Engine	Information	A10	A20	A40	A50	A70	C10 - C30	C20	E01
Eng. 6Z7U 730, F3R 722	version Ducellier			2.7685PHT	3.7697				
Eng. 6Z7U 730, F3R 722	Kit, version Ducellier			2.7686PHT					
Eng. 6Z7U 730, F3R 722							9.6007 C10		
Eng. F3R 729	02/04/97 ->, Qty: 2						9.6096 C10		
Eng. F3R 729	->year 02/04/97, Qty: 2						9.6175 C10		
Eng. 6Z7U 730, F3R 722	->year 02/05/95								4.8920
Eng. F3R 729	02/04/97 ->								4.9492
Eng. 6Z7U 730, F3R 722	02/05/95 ->								4.9499
Eng. F3R 729	->year 02/04/97								4.9501

A10	CONDENSER	A20	CONTACT SET	A40	DISTRIBUTOR CAP	A50	ROTOR	A70	PICK-UP
C10	COIL	C20	IGNITION MODULE	C30	ELECTRONIC IGNITION KIT	E01	IGNITION CABLE SET		

The present application list is a brief version. For the detailed information about the possibility of installation on a specific vehicle, please refer to our web-catalogue http://catalogo.facet.eu/

Vehicle	alim.	kW	Date	Engine	FUNCTIONS ON THE VEHICLE A10	A20	A40	A50	A70	C10 - C30	C20	E01
2.0	Petrol	84	06/95-02/01	ENGINE F3R 722, F3R 728, F3R 768								
Eng. F3R 722	version Ducellier					2.7685PHT	3.7697					
Eng. F3R 722	Kit, version Ducellier					2.7686PHT						
Eng. F3R 722									9.6007	C10		
Eng. F3R 728, F3R 768	02/04/97 ->, Qty: 2								9.6096	C10		
Eng. F3R 728, F3R 768	->year 02/04/97, Qty: 2								9.6175	C10		
Eng. F3R 722	->year 02/05/95											4.8920
Eng. F3R 728, F3R 768	02/04/97 ->											4.9492
Eng. F3R 722	02/05/95 ->											4.9499
Eng. F3R 728, F3R 768	->year 02/04/97											4.9501
2.0 16V	Petrol	102	06/95-03/01	ENGINE N7Q 700, N7Q 704								
All engines	Colour:Black								9.6255	C10		
All engines	Colour:Grey								9.6256	C10		
All engines												4.7061
2.0 16V	Petrol	103	09/99-03/01	ENGINE F4R 780								
All engines	Qty: 4								9.6332	C10		
3.0	Petrol	123	11/93-03/01	ENGINE Z7X 760, Z7X 765								
All engines	info A-K								9.6175	C10		
All engines	info B-K								9.6176	C10		
LAGUNA II												
1.6	Petrol	76	03/01-10/05	ENGINE K4M 710								
All engines	x 4, SAGEM, COIL ON PLUG								9.6332	C10		
1.6 16V	Petrol	79	03/01-12/07	ENGINE K4M 710, K4M 714								
Eng. K4M 710	x 4, SAGEM, COIL ON PLUG								9.6332	C10		
Eng. K4M 714	Qty: 4								9.6332	C10		
1.6 16V	Petrol	82	02/05-08/07	ENGINE K4M 716								
All engines	x 4, SAGEM, COIL ON PLUG								9.6332	C10		
1.6 Bifuel	Petrol/ Liquified Petro-leum Gas (LPG)	79	06/05-12/07	ENGINE K4M 714								
All engines	x 4, SAGEM, COIL ON PLUG								9.6332	C10		
1.6 LPG	Bi-Fuel	79	03/01-05/05	ENGINE K4M 714								
All engines	Qty: 4								9.6332	C10		
All engines	x 4, SAGEM, COIL ON PLUG								9.6332	C10		
1.8 16V	Petrol	85	03/01-12/07	ENGINE F4P 770, F4P 771, F4P 773, F4P 774, F4P 775								
Eng. F4P 770	Qty: 4								9.6332	C10		
Eng. F4P 771, F4P 773, F4P 774, F4P 775	x 4, SAGEM, COIL ON PLUG								9.6332	C10		

A10	CONDENSER	A20	CONTACT SET	A40	DISTRIBUTOR CAP	A50	ROTOR	A70	PICK-UP
C10	COIL	C20	IGNITION MODULE	C30	ELECTRONIC IGNITION KIT	E01	IGNITION CABLE SET		

The present application list is a brief version. For the detailed information about the possibility of installation on a specific vehicle, please refer to our web-catalogue http://catalogo.facet.eu/

Vehicle	alim.	kW	Date	Engine	FUNCTIONS ON THE VEHICLE A10	A20	A40	A50	A70	C10 - C30	C20	E01
1.8 16V	Petrol	86	03/01-05/05	ENGINE F4P 770, F4P 774								
Eng. F4P 770	Qty: 4									9.6332 C10		
Eng. F4P 774	x 4, SAGEM, COIL ON PLUG									9.6332 C10		
1.8 16V	Petrol	88	03/01->	ENGINE F4P 770, F4P 772								
Eng. F4P 770	x 4, SAGEM, COIL ON PLUG									9.6332 C10		
Eng. F4P 772	Qty: 4									9.6332 C10		
1.8 16V	Petrol	89	03/01-05/05	ENGINE F4P 770, F4P 772, F4P 774								
Eng. F4P 770, F4P 772	x 4, SAGEM, COIL ON PLUG									9.6332 C10		
Eng. F4P 774	Qty: 4									9.6332 C10		
2.0 16V	LPG	95	09/02-05/05	ENGINE F4R 713								
All engines	Qty: 4									9.6332 C10		
2.0 16V	LPG	97	09/02-05/05	ENGINE F4R 713								
All engines	Qty: 4									9.6332 C10		
2.0 16V	Petrol	125	01/05-09/07	ENGINE F4R 784, F4R 786, F4R 787								
All engines	x 4, SAGEM, COIL ON PLUG									9.6332 C10		
2.0 16V	Petrol	150	01/05-09/07	ENGINE F4R 886, F4R 887								
All engines	x 4, SAGEM, COIL ON PLUG									9.6332 C10		
2.0 16V	Petrol	98	08/02-09/07	ENGINE F4R 712, F4R 713, F4R 714, F4R 715								
All engines	x 4, SAGEM, COIL ON PLUG									9.6332 C10		
2.0 16V	Petrol	99	08/02-12/07	ENGINE F4R 712, F4R 713, F4R 714, F4R 715								
All engines	x 4, SAGEM, COIL ON PLUG									9.6332 C10		
2.0 16V IDE	Petrol	103	04/01-09/07	ENGINE F5R 700, F5R 701								
All engines	x 1, D.I.S.									9.6265 C10		
Eng. F5R 700												4.7049
2.0 16V Turbo	Petrol	120	01/03-08/05	ENGINE F4R 764, F4R 765, F4R 786, F4R 787								
Eng. F4R 764, F4R 765	x 4, SAGEM, COIL ON PLUG									9.6332 C10		
Eng. F4R 786, F4R 787	Qty: 4									9.6332 C10		
LAGUNA III												
1.6 16V	Petrol	81	10/07-12/15	ENGINE K4M 824								
All engines	x 4, SAGEM, COIL ON PLUG									9.6332 C10		
2.0 16V	Petrol	103	10/07-12/15	ENGINE M4R 704								
All engines	x 4, COIL ON PLUG									9.6389 C10		

A10	CONDENSER	A20	CONTACT SET	A40	DISTRIBUTOR CAP	A50	ROTOR	A70	PICK-UP
C10	COIL	C20	IGNITION MODULE	C30	ELECTRONIC IGNITION KIT	E01	IGNITION CABLE SET		

The present application list is a brief version. For the detailed information about the possibility of installation on a specific vehicle, please refer to our web-catalogue http://catalogo.facet.eu/

Vehicle	alim.	kW	Date	Engine	FUNCTIONS ON THE VEHICLE							
					A10	A20	A40	A50	A70	C10 - C30	C20	E01
2.0 16V Hi-Flex	Petrol/ Ethanol	103	10/07-12/15	ENGINE M4R 704, M4R 726								
Eng. M4R 704	Qty: 4									9.6389 C10		
Eng. M4R 726	BT05/BT0F/BT0W, x 4, COIL ON PLUG									9.6389 C10		
2.0 16V Turbo	Petrol	125	10/07-12/15	ENGINE F4R 811, F4R 813								
All engines	x 4, SAGEM, COIL ON PLUG									9.6332 C10		
2.0 GT	Petrol	150	03/08-12/15	ENGINE F4R 800, F4R802								
All engines	x 4, SAGEM, COIL ON PLUG									9.6332 C10		
3.5 V6	Petrol	175	04/08-12/15	ENGINE 8TZ150XSG15, V4Y713								
All engines	x 6, COIL ON PLUG									9.6433 C10		
LATITUDE												
1.6 RS	Petrol	132	04/14->	ENGINE M5M 400								
All engines	x 4, COIL ON PLUG									9.6451 C10		
2.5 V6	Petrol	130	05/11->	ENGINE 2ZV 604								
All engines	x 6, COIL ON PLUG									9.6433 C10		
3.5	Petrol	171	05/11->	ENGINE 5ZV 604								
All engines	Qty: 6									9.6433 C10		
LODGY												
1.6	Petrol	59	07/13->	ENGINE K7M 812, K7M828								
All engines	x 1, D.I.S.									9.6496 C10		
LOGAN												
1.2 16V	Petrol	54	12/13->	ENGINE D4F 732, D4F 734								
All engines	x 1, D.I.S.									9.6418 C10		
1.2 16V	Petrol	55	02/06->	ENGINE D4F 732								
All engines										9.6418 C10		4.7246
1.2 16V LPG	Petrol/ Liquified Petro-leum Gas (LPG)	53	12/13->	ENGINE D4F 732, D4F 734								
All engines	x 1, D.I.S.									9.6418 C10		
1.4	Petrol	55	09/04->	ENGINE K7J 710								
All engines	x 1, D.I.S.									9.6496 C10		
All engines	->year 18/03/05											4.7244
All engines												4.7252
All engines	18/03/05 ->											4.7252

A10	CONDENSER	A20	CONTACT SET	A40	DISTRIBUTOR CAP	A50	ROTOR	A70	PICK-UP
C10	COIL	C20	IGNITION MODULE	C30	ELECTRONIC IGNITION KIT	E01	IGNITION CABLE SET		

The present application list is a brief version. For the detailed information about the possibility of installation on a specific vehicle, please refer to our web-catalogue http://catalogo.facet.eu/

Vehicle	alim.	kW	Date	Engine	FUNCTIONS ON THE VEHICLE A10	A20	A40	A50	A70	C10 - C30	C20	E01
1.4 LPG	Petrol/ Liquified Petro-leum Gas (LPG)	53	02/08-10/13	**K7J 714**								

Engine	Information	A10	A20	A40	A50	A70	C10 - C30		C20	E01
All engines	x 1, D.I.S.						9.6496	C10		

1.6	Petrol	59	12/13->	**K7M 812**

Engine	Information	A10	A20	A40	A50	A70	C10 - C30		C20	E01
All engines	x 1, D.I.S.						9.6496	C10		

1.6	Petrol	64	09/04->	**K7M 710**

Engine	Information	A10	A20	A40	A50	A70	C10 - C30		C20	E01
All engines	x 1, D.I.S.						9.6496	C10		
All engines	->year 18/03/05									4.7244
All engines										4.7252
All engines	18/03/05 ->									4.7252

1.6	Petrol	65	09/04->	**K7M 714**

Engine	Information	A10	A20	A40	A50	A70	C10 - C30		C20	E01
All engines							9.6496	C10		4.7252

1.6	Petrol	77	04/07->	**K4M 690, K4M 694, K4M 696, K4M 697**

Engine	Information	A10	A20	A40	A50	A70	C10 - C30		C20	E01
All engines	x 4, SAGEM, COIL ON PLUG						9.6332	C10		

1.6	Petrol	78	12/13->	**K4M 845**

Engine	Information	A10	A20	A40	A50	A70	C10 - C30		C20	E01
All engines	x 4, SAGEM, COIL ON PLUG						9.6332	C10		

1.6 16V	Petrol	77	12/05->	**K4M 694, K4M 696**

Engine	Information	A10	A20	A40	A50	A70	C10 - C30		C20	E01
All engines	Qty: 4						9.6332	C10		

LOGAN EXPRESS

1.6	Petrol	64	04/07->	**K7M 710**

Engine	Information	A10	A20	A40	A50	A70	C10 - C30		C20	E01
All engines	x 1, D.I.S.						9.6496	C10		

LOGAN/STEPWAY

1.2	Petrol	55	11/13->	**D4F 732, D4F 734**

Engine	Information	A10	A20	A40	A50	A70	C10 - C30		C20	E01
All engines	x 1, D.I.S.						9.6418	C10		

1.2 16V LPG	Petrol/ Liquified Petro-leum Gas (LPG)	53	11/13->	**D4F 732, D4F 734**

Engine	Information	A10	A20	A40	A50	A70	C10 - C30		C20	E01
All engines	x 1, D.I.S.						9.6418	C10		

1.6	Petrol	59	11/13->	**K7M 812**

Engine	Information	A10	A20	A40	A50	A70	C10 - C30		C20	E01
All engines	x 1, D.I.S.						9.6496	C10		

1.6	Petrol	60	04/14->	**K7M 812**

Engine	Information	A10	A20	A40	A50	A70	C10 - C30		C20	E01
All engines	x 1, D.I.S. ---------- L8JB/L8ME/L8MV, x 1, D.I.S.						9.6496	C10		

A10	CONDENSER	**A20**	CONTACT SET	**A40**	DISTRIBUTOR CAP	**A50**	ROTOR	**A70**	PICK-UP
C10	COIL	**C20**	IGNITION MODULE	**C30**	ELECTRONIC IGNITION KIT	**E01**	IGNITION CABLE SET		

The present application list is a brief version. For the detailed information about the possibility of installation on a specific vehicle, please refer to our web-catalogue http://catalogo.facet.eu/

Vehicle	alim.	kW	Date	Engine	FUNCTIONS ON THE VEHICLE							
					A10	A20	A40	A50	A70	C10 - C30	C20	E01
1.6	Petrol	75	04/14->	ENGINE: K4M 842, K4M 845								
All engines				x 4, SAGEM, COIL ON PLUG						9.6332 C10		
1.6	Petrol	83	09/16->	ENGINE: H4M 429, H4M 438								
All engines				x 4, COIL ON PLUG						9.6513 C10		
MASTER I												
2.0	Petrol	59	07/80-06/85	ENGINE: 829 731								
All engines				version Ducellier			2.7654PHT	3.7691				
2.0	Petrol	60	06/85-12/95	ENGINE: J5R 718, J5R 728								
All engines				version Ducellier			2.7679PHT	3.7694				
All engines										9.6007 C10		
2.2	Petrol	71	08/93-02/98	ENGINE: J7T 788								
All engines				version Ducellier			2.7679PHT	3.7694				
All engines										9.6007 C10		
28-35 2.0	Petrol	58	10/86-07/98	ENGINE: J5R 718, J5R 728								
All engines				version Ducellier			2.7679PHT	3.7694				
All engines										9.6007 C10		
28-35 2.0	Petrol	59	08/80-10/86	ENGINE: 829 731								
All engines				version Ducellier			2.7654PHT	3.7691				
30 2.2	Petrol	67	08/80-07/98	ENGINE: J7T 782, J7T 788								
All engines				version Ducellier			2.7679PHT	3.7694				
All engines										9.6007 C10		
MEGANE												
1.4	Petrol	70	04/01-07/03	ENGINE: K4J 714, K4J750								
All engines				x 4, SAGEM, COIL ON PLUG						9.6332 C10		
1.6	Petrol	79	04/01-07/03	ENGINE: K4M 701, K4M 708, K4M 709, K4M700								
All engines				x 4, SAGEM, COIL ON PLUG						9.6332 C10		
1.6 BiFuel	LPG	66	10/96-10/99	ENGINE: K7M 702								
All engines				->year 01/03/97, x 1, Colour:Black, D.I.S.						9.6255 C10		
All engines				->year 01/03/97, x 1, Colour:Grey, D.I.S.						9.6256 C10		
All engines				01/04/97 ->, ->year 01/06/98, x 1, Colour:Black, D.I.S., connector type, saw teeth						9.6276 C10		
All engines				01/04/97 ->, ->year 01/06/98, x 1, Colour:Grey, D.I.S., connector type, saw teeth						9.6278 C10		
All engines				01/07/98 ->, x 1, D.I.S.						9.6496 C10		

A10	CONDENSER	A20	CONTACT SET	A40	DISTRIBUTOR CAP	A50	ROTOR	A70	PICK-UP
C10	COIL	C20	IGNITION MODULE	C30	ELECTRONIC IGNITION KIT	E01	IGNITION CABLE SET		

The present application list is a brief version. For the detailed information about the possibility of installation on a specific vehicle, please refer to our web-catalogue http://catalogo.facet.eu/

Vehicle	alim.	kW	Date	Engine	FUNCTIONS ON THE VEHICLE: A10	A20	A40	A50	A70	C10 - C30	C20	E01
1.6 BiFuel	Petrol/ Liquified Petro-leum Gas (LPG)	79	04/01-07/03	**K4M 712**								
Engine: All engines	Information: x 4, SAGEM, COIL ON PLUG									9.6332 C10		
1.6 BiFuel	Petrol/ Liquified Petro-leum Gas (LPG)	80	04/01-07/03	**K4M 704**								
Engine: All engines	Information: x 4, SAGEM, COIL ON PLUG									9.6332 C10		
1.8	Petrol	85	04/01-07/03	**F4P 722**								
Engine: All engines	Information: x 4, SAGEM, COIL ON PLUG									9.6332 C10		
2.0	Petrol	55	08/95-02/99	**F4R 740, F4R 746**								
Engine: All engines	Information: x 4, SAGEM, COIL ON PLUG									9.6332 C10		
MEGANE CC												
1.2 TCe	Petrol	85	09/12-08/15	**H5F 400**								
Engine: All engines	Information: x 4, COIL ON PLUG									9.6513 C10		
1.2 TCe	Petrol	97	01/13->	**H5F 404**								
Engine: All engines	Information: x 4, COIL ON PLUG									9.6513 C10		
1.6 16V	Petrol	81	06/10->	**K4M 858**								
Engine: All engines	Information: x 4, SAGEM, COIL ON PLUG									9.6332 C10		
1.6 16V Hi-Flex	Petrol/ Ethanol	81	06/10->	**K4M 866**								
Engine: All engines	Information: x 4, SAGEM, COIL ON PLUG									9.6332 C10		
2.0 TCe	Petrol	132	06/10->	**8XTDM10, F4R 872**								
Engine: Eng. 8XTDM10	Information: Qty: 4									9.6332 C10		
Engine: Eng. F4R 872	Information: x 4, SAGEM, COIL ON PLUG									9.6332 C10		
2.0 Turbo	Petrol	195	10/11->	**8AR90212**								
Engine: All engines	Information: Qty: 4									9.6332 C10		
MEGANE I												
1.4	Petrol	55	09/96-08/03	**E7J 626, E7J 764**								
Engine: Eng. E7J 764	Information: version Ducellier						2.7681PHT	3.7701				
Engine: Eng. E7J 764	Information: version Marelli						2.8211PHT	3.8259				
Engine: Eng. E7J 764	Information: x 1, SIEMENS, DISTRIBUTOR, Dia: 4 mm, connector type SAE									9.6007 C10		
Engine: Eng. E7J 626	Information: x 1, D.I.S.									9.6496 C10		
Engine: Eng. E7J 626	Information:											4.7244
Engine: Eng. E7J 764	Information:											4.8801

A10	CONDENSER	**A20**	CONTACT SET	**A40**	DISTRIBUTOR CAP	**A50**	ROTOR	**A70**	PICK-UP
C10	COIL	**C20**	IGNITION MODULE	**C30**	ELECTRONIC IGNITION KIT	**E01**	IGNITION CABLE SET		

The present application list is a brief version. For the detailed information about the possibility of installation on a specific vehicle, please refer to our web-catalogue http://catalogo.facet.eu/

Vehicle	alim.	kW	Date	Engine	FUNCTIONS ON THE VEHICLE A10	A20	A40	A50	A70	C10 - C30	C20	E01
1.4 16V	Petrol	70	03/99-08/03	ENGINE: K4J 700, K4J 714, K4J750								

Engine	Information	A10	A20	A40	A50	A70	C10 - C30		C20	E01
All engines	x 4, SAGEM, COIL ON PLUG						9.6332	C10		

Vehicle	alim.	kW	Date	Engine
1.4 16V	Petrol	71	05/99-11/02	ENGINE: K4J 710, K4J 711, K4J 712, K4J 713

Engine	Information	A10	A20	A40	A50	A70	C10 - C30		C20	E01
All engines	Qty: 4						9.6332	C10		

Vehicle	alim.	kW	Date	Engine
1.4 16V	Petrol	72	11/00-08/03	ENGINE: K4J 732

Engine	Information	A10	A20	A40	A50	A70	C10 - C30		C20	E01
All engines	Qty: 4						9.6332	C10		

Vehicle	alim.	kW	Date	Engine
1.4 e	Petrol	55	01/96-08/03	ENGINE: E7J 626, E7J 764

Engine	Information	A10	A20	A40	A50	A70	C10 - C30		C20	E01
Eng. E7J 764	version Ducellier			2.7681PHT	3.7701					
Eng. E7J 764	version Marelli			2.8211PHT	3.8259					
Eng. E7J 764	x 1, ignition mod. IGN. MODULE(-), SIEMENS, DISTRIBUTOR, Dia: 4 mm, connector type SAE						9.6007	C10		
Eng. E7J 626	x 1, D.I.S., x 1, ignition mod. IGN. MODULE(-), D.I.S.						9.6496	C10		
Eng. E7J 626										4.7244
Eng. E7J 764										4.8801

Vehicle	alim.	kW	Date	Engine
1.4 Eco	Petrol	52	01/96-03/99	ENGINE: E7J 624

Engine	Information	A10	A20	A40	A50	A70	C10 - C30		C20	E01
All engines	version Ducellier			2.7681PHT	3.7701					
All engines	version Marelli			2.8211PHT	3.8259					
All engines	x 1, ignition mod. IGN. MODULE(-), SIEMENS, DISTRIBUTOR, Dia: 4 mm, connector type SAE						9.6007	C10		
All engines										4.8801

Vehicle	alim.	kW	Date	Engine
1.6	Petrol	64	02/00-09/00	ENGINE: K7M 704

Engine	Information	A10	A20	A40	A50	A70	C10 - C30		C20	E01
All engines							9.6496	C10		4.7244
All engines	x 1, D.I.S.						9.6496	C10		

Vehicle	alim.	kW	Date	Engine
1.6 16V	Petrol	0	11/97->	ENGINE: K4M 743

Engine	Information	A10	A20	A40	A50	A70	C10 - C30		C20	E01
All engines	Qty: 4						9.6332	C10		

Vehicle	alim.	kW	Date	Engine
1.6 16V	Petrol	66	11/97->	ENGINE: K4M 734, K4M 740, K4M 742, K4M 744, K4M 745

Engine	Information	A10	A20	A40	A50	A70	C10 - C30		C20	E01
All engines	Qty: 4						9.6332	C10		

Vehicle	alim.	kW	Date	Engine
1.6 16V	Petrol	70	06/01->	ENGINE: K4M 750, K4M 752, K4M 753

Engine	Information	A10	A20	A40	A50	A70	C10 - C30		C20	E01
All engines	Qty: 4						9.6332	C10		

Vehicle	alim.	kW	Date	Engine
1.6 16V	Petrol	79	11/97->	ENGINE: K4M 701, K4M 704, K4M 706, K4M 708, K4M 709, K4M 710, K4M 712, K4M 714, K4M 720, K4M 724, K4M 730, K4M 748, K4M700

Engine	Information	A10	A20	A40	A50	A70	C10 - C30		C20	E01
Eng. K4M 701, K4M 706, K4M 708, K4M 709, K4M700	x 4, SAGEM, COIL ON PLUG						9.6332	C10		
Eng. K4M 704, K4M 706, K4M 709, K4M 710, K4M 712, K4M 714, K4M 720, K4M 724, K4M 730, K4M 748	Qty: 4						9.6332	C10		

A10	CONDENSER	A20	CONTACT SET	A40	DISTRIBUTOR CAP	A50	ROTOR	A70	PICK-UP
C10	COIL	C20	IGNITION MODULE	C30	ELECTRONIC IGNITION KIT	E01	IGNITION CABLE SET		

The present application list is a brief version. For the detailed information about the possibility of installation on a specific vehicle, please refer to our web-catalogue http://catalogo.facet.eu/

Vehicle	alim.	kW	Date	Engine	FUNCTIONS ON THE VEHICLE A10	A20	A40	A50	A70	C10 - C30	C20	E01
1.6 16V	Petrol	83	11/00->	ENGINE K4M 761, K4M 764								

Engine	Information	A10	A20	A40	A50	A70	C10 - C30		C20	E01
All engines	Qty: 4						9.6332	C10		

1.6 Bifuel	Petrol/ Liquified Petro-leum Gas (LPG)	80	03/99-09/00	ENGINE K4M 712

Engine	Information	A10	A20	A40	A50	A70	C10 - C30		C20	E01
All engines	x 4, SAGEM, COIL ON PLUG						9.6332	C10		

1.6 e	Petrol	66	01/96-08/03	ENGINE K7M 702, K7M 703, K7M 790

Engine	Information	A10	A20	A40	A50	A70	C10 - C30		C20	E01
All engines	->year 10/03/97, Colour:Black						9.6255	C10		
Eng. K7M 702, K7M 703	->year 01/03/97, x 1, Colour:Black, D.I.S.						9.6255	C10		
All engines	->year 10/03/97, Colour:Grey						9.6256	C10		
Eng. K7M 702, K7M 703	->year 01/03/97, x 1, Colour:Grey, D.I.S.						9.6256	C10		
All engines	->year 08/07/98, 10/03/97 ->, Colour:Black						9.6276	C10		
Eng. K7M 702, K7M 703	01/04/97 ->, ->year 01/06/98, x 1, Colour:Black, D.I.S., connector type, saw teeth						9.6276	C10		
All engines	->year 08/07/98, 10/03/97 ->, Colour:Grey						9.6278	C10		
Eng. K7M 702, K7M 703	01/04/97 ->, ->year 01/06/98, x 1, Colour:Grey, D.I.S., connector type, saw teeth						9.6278	C10		
All engines	08/07/98 ->						9.6496	C10		
Eng. K7M 702, K7M 703	01/07/98 ->, x 1, D.I.S., x 1, D.I.S.						9.6496	C10		
Eng. K7M 702, K7M 703	08/07/98 ->									4.7244
Eng. K7M 702, K7M 703	->year 08/07/98, 10/03/97 ->									4.9443
All engines	->year 10/03/97									4.9446

1.6 i	Petrol	55	01/96-03/99	ENGINE K7M 720, K7M 790

Engine	Information	A10	A20	A40	A50	A70	C10 - C30		C20	E01
All engines	->year 01/03/97, x 1, Colour:Black, x 1, Colour:Black, D.I.S., D.I.S.						9.6255	C10		
All engines	->year 01/03/97, x 1, Colour:Grey, x 1, Colour:Grey, D.I.S., D.I.S.						9.6256	C10		
Eng. K7M 720	01/04/97 ->, ->year 01/06/98, x 1, Colour:Black, D.I.S., connector type, saw teeth						9.6276	C10		
Eng. K7M 720	01/04/97 ->, ->year 01/06/98, x 1, Colour:Grey, D.I.S., connector type, saw teeth						9.6278	C10		
Eng. K7M 720	01/07/98 ->, x 1, D.I.S.						9.6496	C10		
Eng. K7M 720	08/07/98 ->									4.7244
Eng. K7M 720	->year 08/07/98, 10/03/97 ->									4.9443
Eng. K7M 720	->year 10/03/97									4.9446

1.6 LPG	Petrol/ Liquified Petro-leum Gas (LPG)	66	08/95-03/99	ENGINE K7M 702

Engine	Information	A10	A20	A40	A50	A70	C10 - C30		C20	E01
All engines	->year 01/03/97, x 1, Colour:Black, D.I.S.						9.6255	C10		
All engines	->year 01/03/97, x 1, Colour:Grey, D.I.S.						9.6256	C10		
All engines	01/04/97 ->, ->year 01/06/98, x 1, Colour:Black, D.I.S., connector type, saw teeth						9.6276	C10		
All engines	01/04/97 ->, ->year 01/06/98, x 1, Colour:Grey, D.I.S., connector type, saw teeth						9.6278	C10		
All engines	01/07/98 ->, x 1, D.I.S.						9.6496	C10		

1.6 LPG	Petrol/ Liquified Petro-leum Gas (LPG)	80	10/00-08/02	ENGINE K4M 704, K4M 712

Engine	Information	A10	A20	A40	A50	A70	C10 - C30		C20	E01
All engines	x 4, SAGEM, COIL ON PLUG						9.6332	C10		

A10	CONDENSER	A20	CONTACT SET	A40	DISTRIBUTOR CAP	A50	ROTOR	A70	PICK-UP
C10	COIL	C20	IGNITION MODULE	C30	ELECTRONIC IGNITION KIT	E01	IGNITION CABLE SET		

The present application list is a brief version. For the detailed information about the possibility of installation on a specific vehicle, please refer to our web-catalogue http://catalogo.facet.eu/

Vehicle	alim.	kW	Date	Engine	FUNCTIONS ON THE VEHICLE							
					A10	A20	A40	A50	A70	C10 - C30	C20	E01
1.8 16V	Petrol	85	01/99-08/03	ENGINE: F4P 720, F4P 722, F4P 772, F4P 774, F4P 775								
Eng. F4P 720, F4P 722	x 4, SAGEM, COIL ON PLUG									9.6332 C10		
Eng. F4P 772, F4P 774, F4P 775	Qty: 4									9.6332 C10		
1.8 16V	Petrol	88	07/00-10/02	ENGINE: F4P 760, F4P 770								
All engines	Qty: 4									9.6332 C10		
1.8 16V	Petrol	89	01/99-11/02	ENGINE: F4P 771								
All engines	Qty: 4									9.6332 C10		
2.0	Petrol	0	01/97-02/99	ENGINE: F3R 262, F3R 264								
All engines	02/04/97 ->, Qty: 2									9.6096 C10		
All engines	->year 02/04/97, Qty: 2									9.6175 C10		
All engines												4.9501
2.0	Petrol	84	04/97-08/03	ENGINE: F3R 750, F3R 791, F3R 796								
Eng. F3R 750	02/04/97 ->, Qty: 2									9.6096 C10		
Eng. F3R 791	x 1, D.I.S., connector type, saw teeth									9.6096 C10		
Eng. F3R 750	->year 02/04/97, Qty: 2									9.6175 C10		
Eng. F3R 796	x 1, D.I.S.									9.6175 C10		
Eng. F3R 750	02/04/97 ->											4.9492
Eng. F3R 750	->year 02/04/97											4.9501
2.0	Petrol	85	05/98-05/01	ENGINE: F3R 750, F3R 751, F3R 752, F3R 791, F3R 796, F3R 797, F3R 798								
Eng. F3R 791	x 1, D.I.S., connector type, saw teeth									9.6096 C10		
Eng. F3R 750, F3R 751, F3R 752, F3R 796, F3R 797, F3R 798	->year 01/04/97, x 1, D.I.S., x 1, D.I.S.									9.6175 C10		
All engines	02/04/97 ->											4.9492
Eng. F3R 750, F3R 751, F3R 752, F3R 791, F3R 797, F3R 798	->year 02/04/97											4.9501
2.0 16V	Petrol	0	01/99-11/02	ENGINE: F4R 276, F4R 712, F4R 713, F4R 790, F4R 794, F4R 795								
All engines	Qty: 4									9.6332 C10		
2.0 16V	Petrol	102	01/02-08/03	ENGINE: F4R 746, F4R 770, F5R 740								
Eng. F4R 746	x 1, D.I.S.									9.6265 C10		
Eng. F4R 746, F4R 770	Qty: 4									9.6332 C10		
Eng. F5R 740	->year 01/10/00, x 1, D.I.S.									9.6496 C10		
2.0 16V	Petrol	103	09/99->	ENGINE: F4R 700, F4R 701, F4R 746, F4R 780								
All engines	Qty: 4									9.6332 C10		
2.0 16V	Petrol	120	07/99->	ENGINE: F4R 760, F4R 761, F4R 762, F4R 763, F4R 767								
All engines	Qty: 4									9.6332 C10		

A10	CONDENSER	A20	CONTACT SET	A40	DISTRIBUTOR CAP	A50	ROTOR	A70	PICK-UP
C10	COIL	C20	IGNITION MODULE	C30	ELECTRONIC IGNITION KIT	E01	IGNITION CABLE SET		

The present application list is a brief version. For the detailed information about the possibility of installation on a specific vehicle, please refer to our web-catalogue http://catalogo.facet.eu/

Vehicle	alim.	kW	Date	Engine	FUNCTIONS ON THE VEHICLE A10	A20	A40	A50	A70	C10 - C30	C20	E01
2.0 16V	Petrol	124	05/00->	ENGINE F4R 730, F4R 732, F4R 736								
Engine: All engines	Information: Qty: 4									9.6332 C10		
2.0 16V	Petrol	88	05/00->	ENGINE F4R 720								
Engine: All engines	Information: Qty: 4									9.6332 C10		
2.0 16V	Petrol	99	11/00->	ENGINE F4R 771								
Engine: All engines	Information: Qty: 4									9.6332 C10		
2.0 16V IDE	Petrol	103	11/99-08/03	ENGINE F4R 746, F5R 740								
Engine: All engines	Information: 01/11/00 ->, x 1, D.I.S.									9.6265 C10		
Engine: All engines	Information: ->year 01/10/00, x 1, D.I.S.									9.6496 C10		
Engine: Eng. F5R 740	Information:											4.7049
2.0 i	Petrol	80	03/99-08/03	ENGINE F3R 750, F3R 751, F3R 752, F3R 791, F3R 796, F3R 797, F3R 798								
Engine: All engines	Information: ->eng. C017557, -eng. F3R752, x 1, D.I.S., x 1, connector type, saw teeth, D.I.S., connector type, saw teeth									9.6096 C10		
Engine: All engines	Information: eng. type I009203 ->, x 1, D.I.S.									9.6175 C10		
Engine: All engines	Information: 02/04/97 ->											4.9492
Engine: Eng. F3R 750, F3R 751, F3R 752, F3R 791, F3R 797, F3R 798	Information: ->year 02/04/97											4.9501
2.0 i	Petrol	84	01/96-08/03	ENGINE F3R 750, F3R 751, F3R 752, F3R 791, F3R 796, F3R 797, F3R 798								
Engine: Eng. F3R 750, F3R 751, F3R 791, F3R 796, F3R 797, F3R 798	Information: 01/04/97 ->, 01/05/97 ->, x 1, D.I.S., connector type, saw teeth, x 1, D.I.S., connector type, saw teeth									9.6096 C10		
Engine: Eng. F3R 750, F3R 751, F3R 752, F3R 796, F3R 797, F3R 798	Information: ->year 01/03/97, ->year 01/04/97, x 1, D.I.S., x 1, D.I.S.									9.6175 C10		
Engine: All engines	Information: 02/04/97 ->											4.9492
Engine: Eng. F3R 750, F3R 751, F3R 752, F3R 791, F3R 797, F3R 798	Information: ->year 02/04/97											4.9501
2.0 RT	Petrol	103	03/01-08/03	ENGINE F4R 740, F4R 741, F4R 746, F4R 747								
Engine: All engines	Information: x 4, SAGEM, COIL ON PLUG									9.6332 C10		
Engine: Eng. F4R 747	Information: Qty: 4									9.6332 C10		
2.0 RT	Petrol	112	10/96-02/99	ENGINE F3R 750, F3R 751, F3R 752, F3R 791, F3R 796, F3R 797, F3R 798								
Engine: All engines	Information: -eng. F3R752, x 1, D.I.S., connector type, saw teeth									9.6096 C10		
Engine: Eng. F3R 752	Information: x 1, D.I.S.									9.6175 C10		
MEGANE II												
1.4	Petrol	60	09/03->	ENGINE K4J 732								
Engine: All engines	Information: x 4, SAGEM, COIL ON PLUG									9.6332 C10		
1.4	Petrol	72	08/03->	ENGINE K4J 730, K4J 740								
Engine: All engines	Information: x 4, SAGEM, COIL ON PLUG									9.6332 C10		

A10	CONDENSER	A20	CONTACT SET	A40	DISTRIBUTOR CAP	A50	ROTOR	A70	PICK-UP
C10	COIL	C20	IGNITION MODULE	C30	ELECTRONIC IGNITION KIT	E01	IGNITION CABLE SET		

The present application list is a brief version. For the detailed information about the possibility of installation on a specific vehicle, please refer to our web-catalogue http://catalogo.facet.eu/

Vehicle	alim.	kW	Date	Engine	FUNCTIONS ON THE VEHICLE A10	A20	A40	A50	A70	C10 - C30	C20	E01
1.4 16V	Petrol	60	10/03-02/08	K4J 732								

Engine	Information	A10	A20	A40	A50	A70	C10 - C30		C20	E01
All engines	x 4, SAGEM, COIL ON PLUG						9.6332	C10		

1.4 16V	Petrol	72	11/02-02/08	K4J 730, K4J 740

Engine	Information	A10	A20	A40	A50	A70	C10 - C30		C20	E01
All engines	x 4, SAGEM, COIL ON PLUG						9.6332	C10		

1.6	Petrol	75	09/03->	K4M 768

Engine	Information	A10	A20	A40	A50	A70	C10 - C30		C20	E01
All engines	Qty: 4						9.6332	C10		

1.6	Petrol	77	05/05->	K4M 760, K4M 761, K4M 762, K4M 788, K4M 812, K4M 813, K4M680

Engine	Information	A10	A20	A40	A50	A70	C10 - C30		C20	E01
Eng. K4M 760, K4M 761, K4M 762, K4M 812, K4M 813, K4M680	x 4, SAGEM, COIL ON PLUG						9.6332	C10		
Eng. K4M 788	Qty: 4						9.6332	C10		

1.6	Petrol	81	09/03-11/08	K4M 760, K4M 761

Engine	Information	A10	A20	A40	A50	A70	C10 - C30		C20	E01
All engines	Qty: 4						9.6332	C10		

1.6	Petrol	82	10/03-01/08	K4M 760

Engine	Information	A10	A20	A40	A50	A70	C10 - C30		C20	E01
All engines	x 4, SAGEM, COIL ON PLUG						9.6332	C10		

1.6	Petrol	83	08/03->	K4M 760, K4M 761, K4M 812, K4M 813

Engine	Information	A10	A20	A40	A50	A70	C10 - C30		C20	E01
All engines	x 4, SAGEM, COIL ON PLUG						9.6332	C10		

1.6 16V	Petrol	75	05/05-07/09	K4M 768

Engine	Information	A10	A20	A40	A50	A70	C10 - C30		C20	E01
All engines	x 4, SAGEM, COIL ON PLUG						9.6332	C10		

1.6 16V	Petrol	77	05/05-07/09	K4M 762

Engine	Information	A10	A20	A40	A50	A70	C10 - C30		C20	E01
All engines	x 4, SAGEM, COIL ON PLUG						9.6332	C10		

1.6 16V	Petrol	82	01/06->	K4M 760, K4M 761, K4M 812, K4M 813

Engine	Information	A10	A20	A40	A50	A70	C10 - C30		C20	E01
All engines	x 4, SAGEM, COIL ON PLUG						9.6332	C10		
Eng. K4M 761, K4M 812, K4M 813	Qty: 4						9.6332	C10		

1.6 16V	Petrol	83	11/02->	K4M 760, K4M 761, K4M 764, K4M 812, K4M 813, K4M 856

Engine	Information	A10	A20	A40	A50	A70	C10 - C30		C20	E01
Eng. K4M 760, K4M 761, K4M 764, K4M 812, K4M 813	x 4, SAGEM, COIL ON PLUG						9.6332	C10		
Eng. K4M 761, K4M 764, K4M 856	Qty: 4						9.6332	C10		

1.6 16V Hi-Flex	Petrol/ Ethanol	77	02/08-07/09	K4M 856

Engine	Information	A10	A20	A40	A50	A70	C10 - C30		C20	E01
All engines	x 4, SAGEM, COIL ON PLUG						9.6332	C10		

A10	CONDENSER	A20	CONTACT SET	A40	DISTRIBUTOR CAP	A50	ROTOR	A70	PICK-UP
C10	COIL	C20	IGNITION MODULE	C30	ELECTRONIC IGNITION KIT	E01	IGNITION CABLE SET		

The present application list is a brief version. For the detailed information about the possibility of installation on a specific vehicle, please refer to our web-catalogue http://catalogo.facet.eu/

Vehicle	alim.	kW	Date	Engine	FUNCTIONS ON THE VEHICLE A10	A20	A40	A50	A70	C10 - C30	C20	E01
1.6 Bifuel	Petrol/ Liquified Petro-leum Gas (LPG)	77	06/05-02/08	ENGINE **K4M 788**								
Engine: All engines	Information: x 4, SAGEM, COIL ON PLUG									9.6332 C10		
1.6 Flex-Fuel	Petrol/ Ethanol	77	01/07-02/08	ENGINE **K4M 856**								
Engine: All engines	Information: x 4, SAGEM, COIL ON PLUG									9.6332 C10		
1.6 LPG 16V	Petrol/ Liquified Petro-leum Gas (LPG)	82	01/06-08/09	ENGINE **K4M 760**								
Engine: All engines	Information: x 4, SAGEM, COIL ON PLUG									9.6332 C10		
2.0	Petrol	101	04/06-11/10	ENGINE **F4R 770, F4R 771**								
Engine: All engines	Information: x 4, SAGEM, COIL ON PLUG									9.6332 C10		
2.0	Petrol	102	09/03-01/11	ENGINE **F4R 770**								
Engine: All engines	Information: Qty: 4									9.6332 C10		
Engine: All engines	Information: x 4, SAGEM, COIL ON PLUG									9.6332 C10		
2.0	Petrol	169	08/06-02/08	ENGINE **F4R 774**								
Engine: All engines	Information: x 4, SAGEM, COIL ON PLUG									9.6332 C10		
2.0	Petrol	99	08/03->	ENGINE **F4R 770, F4R 771**								
Engine: All engines	Information: x 4, SAGEM, COIL ON PLUG									9.6332 C10		
2.0 16V	Petrol	99	11/02-02/08	ENGINE **F4R 770, F4R 771**								
Engine: All engines	Information: x 4, SAGEM, COIL ON PLUG									9.6332 C10		
2.0 16V Turbo	Petrol	120	05/04-03/09	ENGINE **F4R 776**								
Engine: All engines	Information: x 4, SAGEM, COIL ON PLUG									9.6332 C10		
2.0 Renault Sport	Petrol	165	05/04-10/09	ENGINE **F4R 774, F4Rt 774**								
Engine: Eng. F4R 774	Information: x 4, SAGEM, COIL ON PLUG									9.6332 C10		
Engine: Eng. F4Rt 774	Information: Qty: 4									9.6332 C10		
MEGANE III												
1.2 TCe	Petrol	85	03/12->	ENGINE **H5F 400, H5F 408**								
Engine: All engines	Information: x 4, COIL ON PLUG									9.6513 C10		
1.2 TCe	Petrol	97	01/13->	ENGINE **H5F 404, H5F 405, H5F 412**								
Engine: All engines	Information: x 4, COIL ON PLUG									9.6513 C10		
1.6 16V	Petrol	74	11/08->	ENGINE **K4M 848**								
Engine: All engines	Information: x 4, SAGEM, COIL ON PLUG									9.6332 C10		

A10	CONDENSER	**A20**	CONTACT SET	**A40**	DISTRIBUTOR CAP	**A50**	ROTOR	**A70**	PICK-UP
C10	COIL	**C20**	IGNITION MODULE	**C30**	ELECTRONIC IGNITION KIT	**E01**	IGNITION CABLE SET		

The present application list is a brief version. For the detailed information about the possibility of installation on a specific vehicle, please refer to our web-catalogue http://catalogo.facet.eu/

Vehicle	alim.	kW	Date	Engine	FUNCTIONS ON THE VEHICLE A10	A20	A40	A50	A70	C10 - C30	C20	E01
1.6 16V	Petrol	78	01/10-08/15	K4M 848								
Engine: All engines	Information: x 4, SAGEM, COIL ON PLUG									9.6332 C10		
1.6 16V	Petrol	81	11/08->	K4M 858, K4M 866								
Engine: All engines	Information: x 4, SAGEM, COIL ON PLUG									9.6332 C10		
1.6 16V	Petrol	82	11/08->	K4M 858, K4M 866								
Engine: All engines	Information: x 4, SAGEM, COIL ON PLUG									9.6332 C10		
1.6 16V	Petrol	85	01/13->	K4M 858								
Engine: All engines	Information: x 4, SAGEM, COIL ON PLUG									9.6332 C10		
1.6 16V Bifuel	Petrol/ Liquified Petro-leum Gas (LPG)	81	11/08->	K4M 858, K4M 866								
Engine: All engines	Information: x 4, SAGEM, COIL ON PLUG									9.6332 C10		
1.6 16V Hi-Flex	Petrol/ Ethanol	81	11/08-08/15	K4M 866								
Engine: All engines	Information: x 4, SAGEM, COIL ON PLUG									9.6332 C10		
1.6 BiFuel	Petrol/ Liquified Petro-leum Gas (LPG)	81	11/08->	K4M 866								
Engine: All engines	Information: x 4, SAGEM, COIL ON PLUG									9.6332 C10		
2.0 R.S.	Petrol	195	11/08->	F4R874								
Engine: All engines	Information: x 4, SAGEM, COIL ON PLUG									9.6332 C10		
2.0 R.S.	Petrol	201	07/14->	F4R874								
Engine: All engines	Information: x 4, SAGEM, COIL ON PLUG									9.6332 C10		
2.0 TCe	Petrol	132	11/08->	F4R 872, F4R870								
Engine: All engines	Information: x 4, SAGEM, COIL ON PLUG									9.6332 C10		
2.0 TCe	Petrol	140	06/12->	F4R 872								
Engine: All engines	Information: x 4, SAGEM, COIL ON PLUG									9.6332 C10		
2.0 TCe	Petrol	162	09/12->	F4R874								
Engine: All engines	Information: x 4, SAGEM, COIL ON PLUG									9.6332 C10		
2.0 TCe	Petrol	184	05/09->	F4R874								
Engine: All engines	Information: x 4, SAGEM, COIL ON PLUG									9.6332 C10		

A10	CONDENSER	A20	CONTACT SET	A40	DISTRIBUTOR CAP	A50	ROTOR	A70	PICK-UP
C10	COIL	C20	IGNITION MODULE	C30	ELECTRONIC IGNITION KIT	E01	IGNITION CABLE SET		

The present application list is a brief version. For the detailed information about the possibility of installation on a specific vehicle, please refer to our web-catalogue http://catalogo.facet.eu/

Vehicle	alim.	kW	Date	Engine	FUNCTIONS ON THE VEHICLE A10	A20	A40	A50	A70	C10 - C30	C20	E01
2.0 TCe 220	Petrol	162	11/13->	**F4R874**								

Engine	Information	A10	A20	A40	A50	A70	C10 - C30		C20	E01
All engines	x 4, SAGEM, COIL ON PLUG						9.6332	C10		

MEGANE IV

Vehicle	alim.	kW	Date	Engine
1.2 TCe 100	Petrol	74	11/15->	**H5F 408**

Engine	Information	A10	A20	A40	A50	A70	C10 - C30		C20	E01
All engines	x 4, COIL ON PLUG						9.6513	C10		

Vehicle	alim.	kW	Date	Engine
1.2 TCe 130	Petrol	97	11/15->	**H5F 408**

Engine	Information	A10	A20	A40	A50	A70	C10 - C30		C20	E01
All engines	x 4, COIL ON PLUG						9.6513	C10		

Vehicle	alim.	kW	Date	Engine
1.6 16V	Petrol	84	11/15->	**H4M 738, H4M 750**

Engine	Information	A10	A20	A40	A50	A70	C10 - C30		C20	E01
All engines	x 4, COIL ON PLUG, x 4, COIL ON PLUG						9.6513	C10		

Vehicle	alim.	kW	Date	Engine
1.6 SCe	Petrol	84	10/16->	**H4M 738, H4M 750**

Engine	Information	A10	A20	A40	A50	A70	C10 - C30		C20	E01
All engines	x 4, COIL ON PLUG						9.6513	C10		

Vehicle	alim.	kW	Date	Engine
1.6 TCe 165	Petrol	121	07/17->	**M5M 450**

Engine	Information	A10	A20	A40	A50	A70	C10 - C30		C20	E01
All engines	x 4, COIL ON PLUG						9.6451	C10		

Vehicle	alim.	kW	Date	Engine
1.6 TCe 205	Petrol	151	11/15->	**M5M 450**

Engine	Information	A10	A20	A40	A50	A70	C10 - C30		C20	E01
All engines	x 4, COIL ON PLUG						9.6451	C10		

Vehicle	alim.	kW	Date	Engine
1.8 RS 300	Petrol	221	09/18->	**M5P 404**

Engine	Information	A10	A20	A40	A50	A70	C10 - C30		C20	E01
All engines	x 4, COIL ON PLUG						9.6451	C10		

Vehicle	alim.	kW	Date	Engine
1.8 RS TCe 280	Petrol	205	10/17->	**M5P 402, M5P 404**

Engine	Information	A10	A20	A40	A50	A70	C10 - C30		C20	E01
All engines	x 4, COIL ON PLUG						9.6451	C10		

MEGANE SCÉNIC I

Vehicle	alim.	kW	Date	Engine
1.4 i	Petrol	55	01/97-09/99	**E7J 764**

Engine	Information	A10	A20	A40	A50	A70	C10 - C30		C20	E01
All engines	version Ducellier			2.7681PHT	3.7701					
All engines	version Marelli			2.8211PHT	3.8259					
All engines	x 1, SIEMENS, DISTRIBUTOR, Dia: 4 mm, connector type SAE						9.6007	C10		
All engines										4.8801

Vehicle	alim.	kW	Date	Engine
1.6 16V	Petrol	79	04/98-10/99	**K4M 701, K4M 704, K4M 708, K4M700**

Engine	Information	A10	A20	A40	A50	A70	C10 - C30		C20	E01
Eng. K4M 701, K4M700	x 4, SAGEM, COIL ON PLUG						9.6332	C10		
Eng. K4M 704, K4M 708	Qty: 4						9.6332	C10		

Vehicle	alim.	kW	Date	Engine
1.6 e	Petrol	66	10/96-10/99	**K7M 702, K7M 703**

Engine	Information	A10	A20	A40	A50	A70	C10 - C30		C20	E01
All engines	->year 01/03/97, x 1, Colour:Black, D.I.S.						9.6255	C10		
All engines	->year 01/03/97, x 1, Colour:Grey, D.I.S.						9.6256	C10		
All engines	01/04/97 ->, ->year 01/06/98, x 1, Colour:Black, D.I.S., connector type, saw teeth						9.6276	C10		
All engines	01/04/97 ->, ->year 01/06/98, x 1, Colour:Grey, D.I.S., connector type, saw teeth						9.6278	C10		
All engines	01/07/98 ->, x 1, D.I.S.						9.6496	C10		
All engines	08/07/98 ->									4.7244
All engines	->year 08/07/98, 10/03/97 ->									4.9443

A10	CONDENSER	**A20**	CONTACT SET	**A40**	DISTRIBUTOR CAP	**A50**	ROTOR	**A70**	PICK-UP
C10	COIL	**C20**	IGNITION MODULE	**C30**	ELECTRONIC IGNITION KIT	**E01**	IGNITION CABLE SET		

The present application list is a brief version. For the detailed information about the possibility of installation on a specific vehicle, please refer to our web-catalogue http://catalogo.facet.eu/

Vehicle	alim.	kW	Date	Engine	FUNCTIONS ON THE VEHICLE A10	A20	A40	A50	A70	C10 - C30	C20	E01
1.6 e	Petrol	66	10/96-10/99	ENGINE K7M 702, K7M 703								
Engine	Information											4.9446
All engines	->year 10/03/97											
1.6 i	Petrol	55	01/97-09/99	ENGINE K7M 720								
All engines	->year 01/03/97, x 1, Colour:Black, D.I.S.									9.6255 C10		
All engines	->year 01/03/97, x 1, Colour:Grey, D.I.S.									9.6256 C10		
All engines	01/04/97 ->, ->year 01/06/98, x 1, Colour:Black, D.I.S., connector type, saw teeth									9.6276 C10		
All engines	01/04/97 ->, ->year 01/06/98, x 1, Colour:Grey, D.I.S., connector type, saw teeth									9.6278 C10		
All engines	01/07/98 ->, x 1, D.I.S.									9.6496 C10		
All engines	08/07/98 ->											4.7244
All engines	->year 08/07/98, 10/03/97 ->											4.9443
All engines	->year 10/03/97											4.9446
2.0 i	Petrol	80	01/99-09/99	ENGINE F3R 750, F3R 751, F3R 791, F3R 796, F3R 797, F3R 798								
All engines	x 1, D.I.S., connector type, saw teeth									9.6096 C10		
Eng. F3R 796												4.9492
2.0 i	Petrol	84	01/97-09/99	ENGINE F3R 750, F3R 751, F3R 791, F3R 796, F3R 797, F3R 798								
All engines	x 1, D.I.S., connector type, saw teeth									9.6096 C10		
Eng. F3R 750, F3R 751	02/04/97 ->											4.9492
Eng. F3R 750, F3R 751	->year 02/04/97											4.9501
2.0 RXE 4x4	Petrol	84	05/97-10/99	ENGINE F3R 750								
All engines	02/04/97 ->, Qty: 2									9.6096 C10		
All engines	->year 02/04/97, Qty: 2									9.6175 C10		
All engines	02/04/97 ->											4.9492
All engines	->year 02/04/97											4.9501

MODUS / GRAND MODUS

1.2	Petrol	48	05/05->	ENGINE D4F 740								
All engines	x 1, D.I.S.									9.6418 C10		
All engines												4.7246
1.2	Petrol	55	12/04->	ENGINE D4F 740, D4F 742, D4F 744								
Eng. D4F 740, D4F 744	x 1, D.I.S.									9.6418 C10		
Eng. D4F 742										9.6418 C10		
Eng. D4F 740, D4F 742												4.7246
1.2	Petrol	58	12/04->	ENGINE D4F 764								
All engines	x 1, D.I.S.									9.6418 C10		
All engines												4.7246
1.2	Petrol	76	04/11->	ENGINE D4F 786								
All engines	x 1, D.I.S.									9.6496 C10		
All engines												4.7229

A10	CONDENSER	A20	CONTACT SET	A40	DISTRIBUTOR CAP	A50	ROTOR	A70	PICK-UP
C10	COIL	C20	IGNITION MODULE	C30	ELECTRONIC IGNITION KIT	E01	IGNITION CABLE SET		

The present application list is a brief version. For the detailed information about the possibility of installation on a specific vehicle, please refer to our web-catalogue http://catalogo.facet.eu/

Vehicle	alim.	kW	Date	Engine	FUNCTIONS ON THE VEHICLE A10	A20	A40	A50	A70	C10 - C30	C20	E01
1.2 16V	Petrol	74	05/07->	**D4F 784**								

Engine	Information	A10	A20	A40	A50	A70	C10 - C30		C20	E01
All engines	x 1, D.I.S.						9.6496	C10		
All engines										4.7229

1.2 16V Hi-Flex	Petrol/ Ethanol	55	10/08->	**D4F 740, D4F 742**								

Engine	Information	A10	A20	A40	A50	A70	C10 - C30		C20	E01
Eng. D4F 742	x 1, D.I.S.						9.6418	C10		
Eng. D4F 740										4.7246

1.2 GPL	Petrol/ Liquified Petro-leum Gas (LPG)	55	05/08-12/12	**D4F 744**								

Engine	Information	A10	A20	A40	A50	A70	C10 - C30		C20	E01
All engines	x 1, D.I.S.						9.6418	C10		

1.4	Petrol	72	12/04->	**K4J 770, K4J 780**								

Engine	Information	A10	A20	A40	A50	A70	C10 - C30		C20	E01
All engines	x 4, SAGEM, COIL ON PLUG						9.6332	C10		

1.6	Petrol	65	12/04->	**K4M 792, K4M 794**								

Engine	Information	A10	A20	A40	A50	A70	C10 - C30		C20	E01
Eng. K4M 792	Qty: 4						9.6332	C10		
Eng. K4M 794	x 4, SAGEM, COIL ON PLUG						9.6332	C10		

1.6	Petrol	82	12/04->	**K4M 790, K4M 791, K4M 800, K4M 801**								

Engine	Information	A10	A20	A40	A50	A70	C10 - C30		C20	E01
All engines	x 4, SAGEM, COIL ON PLUG						9.6332	C10		

RAPID

1.0	Petrol	27	02/86-05/92	**C1C 706**								

Engine	Information	A10	A20	A40	A50	A70	C10 - C30		C20	E01
All engines	version Ducellier			2.7654PHT	3.7691					
All engines										4.8839

1.0	Petrol	31	09/85-08/91	**C1C 706**								

Engine	Information	A10	A20	A40	A50	A70	C10 - C30		C20	E01
All engines	version Ducellier			2.7654PHT	3.7691					
All engines										4.8839

1.1	Petrol	33	07/85-04/95	**C1E 750, C1E 752, C1E 754, C1E 756, C1E 760, C1E 762, C1E 792**								

Engine	Information	A10	A20	A40	A50	A70	C10 - C30		C20	E01
Eng. C1E 750, C1E 752, C1E 754, C1E 756, C1E 760, C1E 762	version Ducellier			2.7654PHT	3.7691					
Eng. C1E 750, C1E 760	version Femsa			2.7723PHT	3.7758					
Eng. C1E 750, C1E 760	version Marelli			2.8201PHT	3.8247RS					
All engines										4.8839

1.1	Petrol	34	09/85-08/91	**C1E 750**								

Engine	Information	A10	A20	A40	A50	A70	C10 - C30		C20	E01
All engines	version Ducellier			2.7654PHT	3.7691					
All engines	version Femsa			2.7723PHT	3.7758					
All engines	version Marelli			2.8201PHT	3.8247RS					
All engines										4.8839

1.1	Petrol	35	09/93-04/95	**C1E 762**								

Engine	Information	A10	A20	A40	A50	A70	C10 - C30		C20	E01
All engines	version Ducellier			2.7654PHT	3.7691					

A10	CONDENSER	**A20**	CONTACT SET	**A40**	DISTRIBUTOR CAP	**A50**	ROTOR	**A70**	PICK-UP
C10	COIL	**C20**	IGNITION MODULE	**C30**	ELECTRONIC IGNITION KIT	**E01**	IGNITION CABLE SET		

The present application list is a brief version. For the detailed information about the possibility of installation on a specific vehicle, please refer to our web-catalogue http://catalogo.facet.eu/

Vehicle	alim.	kW	Date	Engine	FUNCTIONS ON THE VEHICLE							
					A10	A20	A40	A50	A70	C10 - C30	C20	E01
1.1	Petrol	35	09/93-04/95	ENGINE C1E 762								
Engine	Information											
All engines												4.8839
1.1	Petrol	36	09/91-10/97	ENGINE C1E 764								
Engine	Information											
All engines	version Ducellier						2.7654PHT	3.7691				
All engines												4.8839
1.2	Petrol	40	09/91-03/98	ENGINE C1G 726, C3G 710, C3G 712								
Engine	Information											
All engines	distr. num. 525352A, version Ducellier						2.7691					
Eng. C1G 726										9.6007 C10		
Eng. C3G 710, C3G 712										9.6128 C10		
1.4	Petrol	43	07/85-09/97	ENGINE C1J 768, C1J 780, E6J 738								
Engine	Information											
Eng. E6J 738	version Ducellier						2.7681PHT	3.7701				
Eng. C1J 768, C1J 780	distr. num. 525352A, version Ducellier						2.7691					
Eng. E6J 738	version Marelli						2.8211PHT	3.8259				
All engines										9.6007 C10		
Eng. E6J 738												4.8801
1.4	Petrol	44	03/86-08/91	ENGINE C2J 784								
Engine	Information											
All engines	distr. num. 525352A, version Ducellier						2.7691					
All engines										9.6007 C10		
1.4	Petrol	55	09/91-03/98	ENGINE E7J 720, E7J 724, E7J 726, E7J 773								
Engine	Information											
All engines	version Ducellier						2.7681PHT	3.7701				
All engines	version Marelli						2.8211PHT	3.8259				
All engines										9.6007 C10		4.8801
1.4	Petrol	58	01/94-03/98	ENGINE E7J 728								
Engine	Information											
All engines	version Ducellier						2.7681PHT	3.7701				
All engines	version Marelli						2.8211PHT	3.8259				
All engines										9.6007 C10		4.8801
1.4	Petrol	59	05/95-08/97	ENGINE E7J 726, E7J 773								
Engine	Information											
All engines	x 1, ignition mod. IGN. MODULE(-), SIEMENS, DISTRIBUTOR, Dia: 4 mm, connector type SAE									9.6007 C10		
1.4 Cat	Petrol	43	08/88-03/98	ENGINE C3J 700, C3J 702, C3J 760, C3J 762								
Engine	Information											
All engines	distr. num. 525352A, version Ducellier						2.7691					
Eng. C3J 702, C3J 760, C3J 762										9.6007 C10		
1.4 RN	Petrol	44	09/91-08/93	ENGINE E6J 734								
Engine	Information											
All engines	version Ducellier						2.7681PHT	3.7701				
All engines	version Marelli						2.8211PHT	3.8259				
All engines										9.6007 C10		4.8801

A10	CONDENSER	A20	CONTACT SET	A40	DISTRIBUTOR CAP	A50	ROTOR	A70	PICK-UP
C10	COIL	C20	IGNITION MODULE	C30	ELECTRONIC IGNITION KIT	E01	IGNITION CABLE SET		

The present application list is a brief version. For the detailed information about the possibility of installation on a specific vehicle, please refer to our web-catalogue http://catalogo.facet.eu/

SAFRANE I

Vehicle	alim.	kW	Date	Engine	FUNCTIONS ON THE VEHICLE: A10	A20	A40	A50	A70	C10 - C30	C20	E01
2.0	Petrol	77	11/92-07/96	0LJY, J7R 732								

Engine	Information	A10	A20	A40	A50	A70	C10 - C30		C20	E01
All engines	distr. num. 525646, version Ducellier			2.7681PHT						
All engines	distr. num. 525703, version Ducellier			2.7682PHT						
All engines	distr. num. 525703, Kit, version Ducellier			2.7683PHT						
All engines	version Ducellier				3.7701					
All engines							9.6007	C10		

Vehicle	alim.	kW	Date	Engine
2.0	Petrol	97	08/92-09/96	J7R 738, J7R 739

Engine	Information	A10	A20	A40	A50	A70	C10 - C30		C20	E01
All engines	distr. num. 525646, version Ducellier			2.7681PHT						
All engines	distr. num. 525703, version Ducellier			2.7682PHT						
All engines	distr. num. 525703, Kit, version Ducellier			2.7683PHT						
All engines	version Ducellier				3.7701					
All engines							9.6007	C10		

Vehicle	alim.	kW	Date	Engine
2.0 12V	Petrol	97	04/92-07/96	J7R 734, J7R 735

Engine	Information	A10	A20	A40	A50	A70	C10 - C30		C20	E01
All engines	distr. num. 525646, version Ducellier			2.7681PHT						
All engines	distr. num. 525704, version Ducellier			2.7682PHT						
All engines	distr. num. 525704, Kit, version Ducellier			2.7683PHT						
All engines	version Ducellier				3.7701					
All engines							9.6007	C10		

Vehicle	alim.	kW	Date	Engine
2.2	Petrol	101	04/92-07/96	1MR479QB, J7T 761

Engine	Information	A10	A20	A40	A50	A70	C10 - C30		C20	E01
All engines	distr. num. 525646, version Ducellier			2.7681PHT						
All engines	distr. num. 525703, version Ducellier			2.7682PHT						
All engines	distr. num. 525703, Kit, version Ducellier			2.7683PHT						
All engines	version Ducellier				3.7701					
All engines							9.6007	C10		

Vehicle	alim.	kW	Date	Engine
2.2	Petrol	79	04/92-07/96	J7T 762

Engine	Information	A10	A20	A40	A50	A70	C10 - C30		C20	E01
All engines	distr. num. 525646, version Ducellier			2.7681PHT						
All engines	distr. num. 525703, version Ducellier			2.7682PHT						
All engines	distr. num. 525703, Kit, version Ducellier			2.7683PHT						
All engines	version Ducellier				3.7701					
All engines							9.6007	C10		

Vehicle	alim.	kW	Date	Engine
3.0	Petrol	125	02/93-06/96	Z7X 723

Engine	Information	A10	A20	A40	A50	A70	C10 - C30		C20	E01
All engines	version Bosch			2.7530/6PHT	3.7573/19RS					
All engines							9.6007	C10		

Vehicle	alim.	kW	Date	Engine
3.0 Biturbo 4x4	Petrol	193	02/93-07/96	Z7X 726

Engine	Information	A10	A20	A40	A50	A70	C10 - C30		C20	E01
All engines	version Bosch			2.7530/6PHT	3.7573/19RS					
All engines							9.6007	C10		

Vehicle	alim.	kW	Date	Engine
3.0 V6	Petrol	123	12/92-07/96	Z7X 721, Z7X 722, Z7X 723, Z7X 753

Engine	Information	A10	A20	A40	A50	A70	C10 - C30		C20	E01
All engines	version Bosch			2.7530/6PHT	3.7573/19RS					
All engines							9.6007	C10		

Vehicle	alim.	kW	Date	Engine
3.0 V6 4x4	Petrol	123	12/92-07/96	Z7X 721, Z7X 722, Z7X 723

Engine	Information	A10	A20	A40	A50	A70	C10 - C30		C20	E01
All engines	version Bosch			2.7530/6PHT	3.7573/19RS					
All engines							9.6007	C10		

A10	CONDENSER	A20	CONTACT SET	A40	DISTRIBUTOR CAP	A50	ROTOR	A70	PICK-UP
C10	COIL	C20	IGNITION MODULE	C30	ELECTRONIC IGNITION KIT	E01	IGNITION CABLE SET		

The present application list is a brief version. For the detailed information about the possibility of installation on a specific vehicle, please refer to our web-catalogue http://catalogo.facet.eu/

Vehicle	alim.	kW	Date	Engine	FUNCTIONS ON THE VEHICLE: A10	A20	A40	A50	A70	C10 - C30	C20	E01

SAFRANE II

				ENGINE
2.0 16V	Petrol	100	07/96-12/00	N7Q 710, N7Q 711

Engine	Information	A10	A20	A40	A50	A70	C10 - C30	C20	E01
All engines	Fitting Position:for cylinder 1, Fitting Position:for cylinder 4, x 1, Colour:Black, D.I.S.						9.6255 C10		
All engines	Fitting Position:for cylinder 2, Fitting Position:for cylinder 3, x 1, Colour:Grey, D.I.S.						9.6256 C10		
All engines									4.7061

				ENGINE
2.5 20V	Petrol	121	07/96-12/00	N7U 700, N7U 701

Engine	Information	A10	A20	A40	A50	A70	C10 - C30	C20	E01
All engines	version Bosch			2.7530/30PHT	3.7573/47RS				
All engines							9.8123 C30		4.7064

				ENGINE
2.9 24V	Petrol	140	03/99-12/00	L7X 713

Engine	Information	A10	A20	A40	A50	A70	C10 - C30	C20	E01
All engines	version Bosch			2.7530/6PHT	3.7573/19RS				

				ENGINE
3.0 V6	Petrol	123	07/96-12/00	Z7X 755

Engine	Information	A10	A20	A40	A50	A70	C10 - C30	C20	E01
All engines	x 1, ignition mod. IGN. MODULE(-), SIEMENS, DISTRIBUTOR, Dia: 4 mm, connector type SAE						9.6007 C10		

SANDERO I

				ENGINE
1.2 16V	Petrol	55	11/08->	D4F 732

Engine	Information	A10	A20	A40	A50	A70	C10 - C30	C20	E01
All engines							9.6418 C10		4.7246

				ENGINE
1.4	Petrol	55	02/09->	K7J 710

Engine	Information	A10	A20	A40	A50	A70	C10 - C30	C20	E01
All engines	x 1, D.I.S.						9.6496 C10		
All engines	->year 18/03/05								4.7244
All engines	18/03/05 ->								4.7252

				ENGINE
1.4 LPG	Petrol/ Liquified Petroleum Gas (LPG)	53	02/09->	K7J 714

Engine	Information	A10	A20	A40	A50	A70	C10 - C30	C20	E01
All engines	x 1, D.I.S.						9.6496 C10		

				ENGINE
1.6	Petrol	62	11/10->	K7M 710

Engine	Information	A10	A20	A40	A50	A70	C10 - C30	C20	E01
All engines	x 1, D.I.S.						9.6496 C10		

				ENGINE
1.6	Petrol	64	02/09->	K7M 710

Engine	Information	A10	A20	A40	A50	A70	C10 - C30	C20	E01
All engines	x 1, D.I.S.						9.6496 C10		
All engines	->year 18/03/05								4.7244
All engines	18/03/05 ->								4.7252

				ENGINE
1.6	Petrol	66	05/09->	K7M 710

Engine	Information	A10	A20	A40	A50	A70	C10 - C30	C20	E01
All engines							9.6496 C10		
All engines	->year 18/03/05								4.7244
All engines	18/03/05 ->								4.7252

				ENGINE
1.6	Petrol	75	12/07->	K7M 710

Engine	Information	A10	A20	A40	A50	A70	C10 - C30	C20	E01
All engines	x 1, D.I.S.						9.6496 C10		
All engines									4.7252

A10	CONDENSER	A20	CONTACT SET	A40	DISTRIBUTOR CAP	A50	ROTOR	A70	PICK-UP
C10	COIL	C20	IGNITION MODULE	C30	ELECTRONIC IGNITION KIT	E01	IGNITION CABLE SET		

The present application list is a brief version. For the detailed information about the possibility of installation on a specific vehicle, please refer to our web-catalogue http://catalogo.facet.eu/

Vehicle	alim.	kW	Date	Engine	FUNCTIONS ON THE VEHICLE A10	A20	A40	A50	A70	C10 - C30	C20	E01
1.6	Petrol	76	12/07-07/13	K4M 697								
Engine: All engines	Information: x 4, SAGEM, COIL ON PLUG									9.6332 C10		
1.6	Petrol	77	12/12->	K4M 697								
Engine: All engines	Information: x 4, SAGEM, COIL ON PLUG									9.6332 C10		
SANDERO II												
1.2 16V	Petrol	54	12/13->	D4F 732, D4F 734								
Engine: All engines	Information: x 1, D.I.S.									9.6418 C10		
1.2 16V	Petrol	55	04/15->	D4F 732								
Engine: All engines	Information: x 1, D.I.S.									9.6418 C10		
1.2 16V LPG	Petrol/ Liquified Petro-leum Gas (LPG)	53	12/13->	D4F 734								
Engine: All engines	Information: x 1, D.I.S.									9.6418 C10		
1.6	Petrol	59	11/13->	K7M 812								
Engine: All engines	Information: x 1, D.I.S.									9.6496 C10		
1.6	Petrol	60	11/13->	K7M 812								
Engine: All engines	Information: x 1, D.I.S.									9.6496 C10		
1.6	Petrol	61	11/13->	K7M 812								
Engine: All engines	Information: x 1, D.I.S.									9.6496 C10		
1.6	Petrol	83	09/16->	H4M 429, H4M 438								
Engine: All engines	Information: x 4, COIL ON PLUG									9.6513 C10		
1.6 16V	Petrol	75	04/14->	K4M 842, K4M 845								
Engine: All engines	Information: x 4, SAGEM, COIL ON PLUG									9.6332 C10		
TCe 90	Petrol	66	09/15->	H4B 400, H4B 408, H4B 410, H4B411								
Engine: All engines	Information: x 3, COIL ON PLUG									9.6513 C10		
SCÉNIC												
1.6 VVT	Petrol	81	01/13->	K4M 858								
Engine: All engines	Information: x 4, SAGEM, COIL ON PLUG									9.6332 C10		
SCÉNIC I												
1.4 16V	Petrol	70	09/99-08/03	K4J 714, K4J750								
Engine: All engines	Information: x 4, SAGEM, COIL ON PLUG									9.6332 C10		

A10	CONDENSER	A20	CONTACT SET	A40	DISTRIBUTOR CAP	A50	ROTOR	A70	PICK-UP
C10	COIL	C20	IGNITION MODULE	C30	ELECTRONIC IGNITION KIT	E01	IGNITION CABLE SET		

The present application list is a brief version. For the detailed information about the possibility of installation on a specific vehicle, please refer to our web-catalogue http://catalogo.facet.eu/

Vehicle	alim.	kW	Date	Engine	FUNCTIONS ON THE VEHICLE							
					A10	A20	A40	A50	A70	C10 - C30	C20	E01
1.6	Petrol	75	03/01-08/03	ENGINE: K4M 701, K4M 708, K4M 709, K4M700								
Engine: All engines	Information: x 4, SAGEM, COIL ON PLUG									9.6332 C10		
1.6	Petrol	79	09/99-09/03	ENGINE: K4M 706, K4M 707, K4M 776, K4M700								
Engine: All engines	Information: x 4, SAGEM, COIL ON PLUG									9.6332 C10		
1.6	Petrol	81	06/01-09/03	ENGINE: K4M 708								
Engine: All engines	Information: Qty: 4									9.6332 C10		
1.6 16V	Petrol	107	05/00-08/03	ENGINE: K4M 712								
Engine: All engines	Information: Qty: 4									9.6332 C10		
1.6 BiFuel	Petrol/ Liquified Petro-leum Gas (LPG)	75	03/01-08/03	ENGINE: K4M 712								
Engine: All engines	Information: x 4, SAGEM, COIL ON PLUG									9.6332 C10		
1.6 BiFuel	Petrol/ Liquified Petro-leum Gas (LPG)	79	09/99-04/01	ENGINE: K4M 704								
Engine: All engines	Information: x 4, SAGEM, COIL ON PLUG									9.6332 C10		
1.8 16V	Petrol	85	01/01-08/03	ENGINE: F4P 720, F4P 722								
Engine: All engines	Information: x 4, SAGEM, COIL ON PLUG									9.6332 C10		
1.8 4x4	Petrol	85	07/00-04/01	ENGINE: F4P 722								
Engine: All engines	Information: x 4, SAGEM, COIL ON PLUG									9.6332 C10		
2.0	Petrol	84	09/99-08/03	ENGINE: F3R 791, F3R 797, F3R 798								
Engine: All engines	Information: 02/04/97 ->, Qty: 2									9.6096 C10		
Engine: All engines	Information: ->year 02/04/97, Qty: 2									9.6175 C10		
Engine: All engines	Information: 02/04/97 ->											4.9492
Engine: All engines	Information: ->year 02/04/97											4.9501
2.0 16V	Petrol	102	07/00-08/03	ENGINE: F4R 740, F4R 741, F4R 744, F4R 746, F4R 747								
Engine: Eng. F4R 740, F4R 741, F4R 744, F4R 747	Information: x 4, SAGEM, COIL ON PLUG									9.6332 C10		
Engine: Eng. F4R 746	Information: Qty: 4									9.6332 C10		
2.0 16V	Petrol	103	09/99-08/03	ENGINE: F4R 740, F4R 741, F4R 744, F4R 746, F4R 747								
Engine: Eng. F4R 740, F4R 741, F4R 746, F4R 747	Information: x 4, SAGEM, COIL ON PLUG									9.6332 C10		
Engine: Eng. F4R 744	Information: Qty: 4									9.6332 C10		

A10	CONDENSER	A20	CONTACT SET	A40	DISTRIBUTOR CAP	A50	ROTOR	A70	PICK-UP
C10	COIL	C20	IGNITION MODULE	C30	ELECTRONIC IGNITION KIT	E01	IGNITION CABLE SET		

The present application list is a brief version. For the detailed information about the possibility of installation on a specific vehicle, please refer to our web-catalogue http://catalogo.facet.eu/

Vehicle	alim.	kW	Date	Engine	FUNCTIONS ON THE VEHICLE A10	A20	A40	A50	A70	C10 - C30	C20	E01
2.0 16V RX4	Petrol	102	06/00-08/03	**F4R 744, F4R 746**								

Engine	Information	A10	A20	A40	A50	A70	C10 - C30		C20	E01
Eng. F4R 744	x 4, SAGEM, COIL ON PLUG						9.6332	C10		
Eng. F4R 746	Qty: 4						9.6332	C10		

SCÉNIC II

1.4	Petrol	72	06/03-11/08	**K4J 730, K4J 740**

Engine	Information	A10	A20	A40	A50	A70	C10 - C30		C20	E01
All engines	x 4, SAGEM, COIL ON PLUG						9.6332	C10		

1.6	Petrol	77	06/06-11/08	**K4M 788**

Engine	Information	A10	A20	A40	A50	A70	C10 - C30		C20	E01
All engines	x 4, SAGEM, COIL ON PLUG						9.6332	C10		

1.6	Petrol	83	06/03-10/06	**K4M 761, K4M 782, K4M 812, K4M 813**

Engine	Information	A10	A20	A40	A50	A70	C10 - C30		C20	E01
All engines	x 4, SAGEM, COIL ON PLUG						9.6332	C10		

1.6 16V	Petrol	82	10/05-11/08	**K4M 766, K4M 812, K4M 813**

Engine	Information	A10	A20	A40	A50	A70	C10 - C30		C20	E01
Eng. K4M 766	Qty: 4						9.6332	C10		
Eng. K4M 812, K4M 813	x 4, SAGEM, COIL ON PLUG						9.6332	C10		

1.6 16V	Petrol	83	05/03->	**K4M 764**

Engine	Information	A10	A20	A40	A50	A70	C10 - C30		C20	E01
All engines	Qty: 4						9.6332	C10		

1.6 BiFuel	Petrol/ Liquified Petro-leum Gas (LPG)	83	08/03-05/06	**K4M 764**

Engine	Information	A10	A20	A40	A50	A70	C10 - C30		C20	E01
All engines	x 4, SAGEM, COIL ON PLUG						9.6332	C10		

1.6 Hi-Flex	Petrol/ Ethanol	81	03/05-07/10	**K4M 766**

Engine	Information	A10	A20	A40	A50	A70	C10 - C30		C20	E01
All engines	x 4, SAGEM, COIL ON PLUG						9.6332	C10		

2.0	Petrol	101	02/08-04/09	**F4R 770, F4R 771**

Engine	Information	A10	A20	A40	A50	A70	C10 - C30		C20	E01
Eng. F4R 770	Qty: 4						9.6332	C10		
Eng. F4R 771	x 4, SAGEM, COIL ON PLUG						9.6332	C10		

2.0	Petrol	103	06/03-07/10	**F4R 770**

Engine	Information	A10	A20	A40	A50	A70	C10 - C30		C20	E01
All engines	Qty: 4						9.6332	C10		

2.0	Petrol	99	06/03-06/09	**F4R 770, F4R 771**

Engine	Information	A10	A20	A40	A50	A70	C10 - C30		C20	E01
All engines	x 4, SAGEM, COIL ON PLUG						9.6332	C10		

2.0 16V Turbo	Petrol	120	05/04-11/08	**F4R 776**

Engine	Information	A10	A20	A40	A50	A70	C10 - C30		C20	E01
All engines	x 4, SAGEM, COIL ON PLUG						9.6332	C10		

SCÉNIC III

1.2 TCe	Petrol	85	04/12->	**H5F 400, H5F 408**

Engine	Information	A10	A20	A40	A50	A70	C10 - C30		C20	E01
All engines	x 4, COIL ON PLUG						9.6513	C10		

A10	CONDENSER	**A20**	CONTACT SET	**A40**	DISTRIBUTOR CAP	**A50**	ROTOR	**A70**	PICK-UP
C10	COIL	**C20**	IGNITION MODULE	**C30**	ELECTRONIC IGNITION KIT	**E01**	IGNITION CABLE SET		

The present application list is a brief version. For the detailed information about the possibility of installation on a specific vehicle, please refer to our web-catalogue http://catalogo.facet.eu/

Vehicle	alim.	kW	Date	Engine	FUNCTIONS ON THE VEHICLE A10	A20	A40	A50	A70	C10 - C30	C20	E01
1.2 TCe	Petrol	96	07/14->	**H5F 408**								

Engine	Information	A10	A20	A40	A50	A70	C10 - C30	C20	E01
All engines	x 4, COIL ON PLUG						9.6513 C10		

1.2 TCe	Petrol	97	01/13->	**H5F 404, H5F 408**

Engine	Information	A10	A20	A40	A50	A70	C10 - C30	C20	E01
All engines	x 4, COIL ON PLUG						9.6513 C10		

1.6 16V	Petrol	81	02/09->	**K4M 858**

Engine	Information	A10	A20	A40	A50	A70	C10 - C30	C20	E01
All engines	x 4, SAGEM, COIL ON PLUG						9.6332 C10		

1.6 16V Bifuel	Petrol/ Liquified Petro-leum Gas (LPG)	79	04/12-12/13	**K4M 866**

Engine	Information	A10	A20	A40	A50	A70	C10 - C30	C20	E01
All engines	x 4, SAGEM, COIL ON PLUG						9.6332 C10		

1.6 16V Bifuel	Petrol/ Liquified Petro-leum Gas (LPG)	81	02/09->	**K4M 866**

Engine	Information	A10	A20	A40	A50	A70	C10 - C30	C20	E01
All engines	x 4, SAGEM, COIL ON PLUG						9.6332 C10		

1.6 E85	Petrol/ Ethanol	81	02/09->	**K4M 866**

Engine	Information	A10	A20	A40	A50	A70	C10 - C30	C20	E01
All engines	x 4, SAGEM, COIL ON PLUG						9.6332 C10		

SCÉNIC IV

1.2 TCe 115	Petrol	85	09/16->	**H5F 408**

Engine	Information	A10	A20	A40	A50	A70	C10 - C30	C20	E01
All engines	x 4, COIL ON PLUG						9.6513 C10		

1.2 TCe 130	Petrol	96	09/16->	**H5F 408**

Engine	Information	A10	A20	A40	A50	A70	C10 - C30	C20	E01
All engines	x 4, COIL ON PLUG						9.6513 C10		

SUPER 5

1.0	Petrol	30	10/84-10/88	**C1C 700**

Engine	Information	A10	A20	A40	A50	A70	C10 - C30	C20	E01
All engines	version Femsa			2.7723PHT	3.7758				
All engines	version Marelli			2.8201PHT	3.8247RS				
All engines	-air conditioning								4.8839

1.1	Petrol	33	01/86-03/95	**C1E 750, C1E 752, C1E 756, C1E 760**

Engine	Information	A10	A20	A40	A50	A70	C10 - C30	C20	E01
Eng. C1E 752, C1E 756, C1E 760	version Ducellier			2.7654PHT	3.7691				
All engines	-air conditioning								4.8839

1.1	Petrol	34	10/84-12/96	**C1E 750, C1E 752, C1E 754**

Engine	Information	A10	A20	A40	A50	A70	C10 - C30	C20	E01
Eng. C1E 752, C1E 754	version Ducellier			2.7654PHT	3.7691				
All engines	-air conditioning								4.8839

A10	CONDENSER	**A20**	CONTACT SET	**A40**	DISTRIBUTOR CAP	**A50**	ROTOR	**A70**	PICK-UP
C10	COIL	**C20**	IGNITION MODULE	**C30**	ELECTRONIC IGNITION KIT	**E01**	IGNITION CABLE SET		

The present application list is a brief version. For the detailed information about the possibility of installation on a specific vehicle, please refer to our web-catalogue http://catalogo.facet.eu/

Vehicle	alim.	kW	Date	Engine	FUNCTIONS ON THE VEHICLE A10	A20	A40	A50	A70	C10 - C30	C20	E01
1.2	Petrol	40	01/87-08/90	ENGINE C1G 702, C1G 720, C1G 722								

Engine	Information	A10	A20	A40	A50	A70	C10 - C30		C20	E01
Eng. C1G 702	version Ducellier			2.7659PHT						
Eng. C1G 720, C1G 722	distr. num. 525352A, version Ducellier			2.7691						
Eng. C1G 702	distr. num. 525352A, version Ducellier				3.7688					
Eng. C1G 702	distr. num. 525352E, version Ducellier				3.7694					
All engines							9.6007	C10		

1.2	Petrol	44	01/87-12/96	ENGINE C1G 702

Engine	Information	A10	A20	A40	A50	A70	C10 - C30		C20	E01
All engines	version Ducellier			2.7659PHT						
All engines	distr. num. 525352A, version Ducellier				3.7688					
All engines	distr. num. 525352E, version Ducellier				3.7694					
All engines							9.6007	C10		

1.4	Petrol	43	10/84-06/88	ENGINE C1J 768, C1J 780

Engine	Information	A10	A20	A40	A50	A70	C10 - C30		C20	E01
All engines	distr. num. 525352A, version Ducellier			2.7691						
All engines							9.6007	C10		

1.4	Petrol	44	09/85-08/90	ENGINE C2J 784, C3J 700

Engine	Information	A10	A20	A40	A50	A70	C10 - C30		C20	E01
All engines	distr. num. 525352A, version Ducellier			2.7691						
All engines							9.6007	C10		

1.4	Petrol	49	06/87-07/89	ENGINE C2J 782

Engine	Information	A10	A20	A40	A50	A70	C10 - C30		C20	E01
All engines	distr. num. 525352A, version Ducellier			2.7691						
All engines							9.6007	C10		

1.4	Petrol	52	10/84-07/89	ENGINE C2J 700, C2J 780, C2J 781, C2J 788, C2J 789, C2J 798

Engine	Information	A10	A20	A40	A50	A70	C10 - C30		C20	E01
Eng. C2J 798	version Ducellier			2.7659PHT						
Eng. C2J 700, C2J 780, C2J 781, C2J 788, C2J 789	distr. num. 525352A, version Ducellier			2.7691						
Eng. C2J 798	distr. num. 525352A, version Ducellier				3.7688					
Eng. C2J 798	distr. num. 525352E, version Ducellier				3.7694					
All engines							9.6007	C10		

1.4	Petrol	85	04/85-10/87	ENGINE C1J 788

Engine	Information	A10	A20	A40	A50	A70	C10 - C30		C20	E01
All engines	distr. num. 525352A, version Ducellier			2.7691						
All engines							9.6007	C10		

1.4 Cat	Petrol	43	10/85-12/96	ENGINE C3J 700, C3J 702, C3J 760

Engine	Information	A10	A20	A40	A50	A70	C10 - C30		C20	E01
All engines	distr. num. 525352A, version Ducellier			2.7691						
All engines							9.6007	C10		

1.4 Turbo	Petrol	85	08/85-06/89	ENGINE C1J 788

Engine	Information	A10	A20	A40	A50	A70	C10 - C30		C20	E01
All engines	distr. num. 525352A, version Ducellier			2.7691						
All engines							9.6007	C10		

1.4 Turbo	Petrol	88	04/85-08/90	ENGINE C1J 782, C1J 784, C1J 788

Engine	Information	A10	A20	A40	A50	A70	C10 - C30		C20	E01
Eng. C1J 784	version Ducellier			2.7659PHT						
Eng. C1J 782, C1J 788	distr. num. 525352A, version Ducellier			2.7691						

A10	CONDENSER	A20	CONTACT SET	A40	DISTRIBUTOR CAP	A50	ROTOR	A70	PICK-UP
C10	COIL	C20	IGNITION MODULE	C30	ELECTRONIC IGNITION KIT	E01	IGNITION CABLE SET		

The present application list is a brief version. For the detailed information about the possibility of installation on a specific vehicle, please refer to our web-catalogue http://catalogo.facet.eu/

Vehicle	alim.	kW	Date	Engine	FUNCTIONS ON THE VEHICLE: A10	A20	A40	A50	A70	C10 - C30	C20	E01
1.4 Turbo	Petrol	88	04/85-08/90	ENGINE: C1J 782, C1J 784, C1J 788								
Engine: Eng. C1J 784	Information: distr. num. 525352A, version Ducellier							3.7688				
Eng. C1J 784	distr. num. 525352E, version Ducellier							3.7694				
All engines										9.6007 C10		
1.7	Petrol	54	10/86-03/95	ENGINE: F3N 716, F3N 717								
All engines	version Ducellier						2.7669PHT	3.7697				
All engines	Kit, version Ducellier						2.7672PHT					
All engines										9.6007 C10		
1.7	Petrol	64	06/87-03/95	ENGINE: F2N 740, F2N 742								
All engines	version Ducellier						2.7669PHT	3.7697				
All engines	Kit, version Ducellier						2.7672PHT					
All engines										9.6007 C10		
1.7	Petrol	66	09/88-09/90	ENGINE: F2N 740								
All engines	version Ducellier						2.7669PHT	3.7697				
All engines	Kit, version Ducellier						2.7672PHT					
All engines										9.6007 C10		
1.7 i	Petrol	69	10/86-08/91	ENGINE: F3N 702								
All engines	version Ducellier						2.7669PHT	3.7697				
All engines	Kit, version Ducellier						2.7672PHT					
All engines										9.6007 C10		
TALISMAN												
1.6 TCe 150	Petrol	110	11/15->	ENGINE: M5M 450								
All engines	x 4, COIL ON PLUG									9.6451 C10		
1.6 TCe 200	Petrol	147	11/15->	ENGINE: M5M 450								
All engines	x 4, COIL ON PLUG									9.6451 C10		
1.8 TCe 225	Petrol	165	09/18->	ENGINE: M5P 403								
All engines	x 4, COIL ON PLUG									9.6451 C10		
THALIA I												
1.2i 16V	Petrol	55	04/04->	ENGINE: D4F 728								
All engines										9.6418 C10		4.7246
1.4	Petrol	55	08/00->	ENGINE: K7J 700								
All engines												4.7252
1.4	Petrol	72	05/00-02/09	ENGINE: K7J 700, K7J718								
Eng. K7J718	x 1, D.I.S.									9.6496 C10		
Eng. K7J 700												4.7252
1.4 16V	Petrol	72	08/00->	ENGINE: K4J 713								
All engines	Qty: 4									9.6332 C10		

A10	CONDENSER	A20	CONTACT SET	A40	DISTRIBUTOR CAP	A50	ROTOR	A70	PICK-UP
C10	COIL	C20	IGNITION MODULE	C30	ELECTRONIC IGNITION KIT	E01	IGNITION CABLE SET		

The present application list is a brief version. For the detailed information about the possibility of installation on a specific vehicle, please refer to our web-catalogue http://catalogo.facet.eu/

Vehicle	alim.	kW	Date	Engine	FUNCTIONS ON THE VEHICLE A10	A20	A40	A50	A70	C10 - C30	C20	E01
1.6	Petrol	79	01/01->	ENGINE K4M 745								
Engine	Information											
All engines	Qty: 4									9.6332 C10		
THALIA II												
1.2 16V	Petrol	55	09/08-06/14	ENGINE D4F 728, D4F736								
Engine	Information											
All engines	x 1, D.I.S.									9.6418 C10		
1.4	Petrol	55	09/08-06/14	ENGINE K7J 700								
Engine	Information											
All engines	x 1, D.I.S.									9.6496 C10		
All engines												4.7252
1.4	Petrol	72	01/09-12/11	ENGINE K4J 712, K4J 713								
Engine	Information											
All engines	x 4, SAGEM, COIL ON PLUG									9.6332 C10		
1.6 16V	Petrol	77	09/08->	ENGINE K4M 670, K4M 674, K4M 744								
Engine	Information											
Eng. K4M 670, K4M 674	x 4, SAGEM, COIL ON PLUG									9.6332 C10		
Eng. K4M 744	Qty: 4									9.6332 C10		
TRAFIC I												
1.4	Petrol	35	03/80-06/91	ENGINE C1J 700								
Engine	Information											
All engines	version Ducellier						2.7654PHT					
All engines	->year 30/09/90, version Ducellier							3.7691				
All engines	01/10/90 ->, version Ducellier							3.7694				
1.7	Petrol	50	05/89-08/94	ENGINE F1N 720, F1N 722, F1N 724								
Engine	Information											
All engines	version Ducellier						2.7669PHT	3.7697				
All engines	Kit, version Ducellier						2.7672PHT					
All engines										9.6007 C10		
2.0	Petrol	59	05/89-08/90	ENGINE J5R 716, J5R 726								
Engine	Information											
Eng. J5R 716	version Ducellier						2.7679PHT	3.7694				
Eng. J5R 726	version Ducellier						2.7681PHT	3.7701				
All engines										9.6007 C10		
2.0 RWD	Petrol	59	05/89-10/97	ENGINE J5R 726								
Engine	Information											
All engines	version Ducellier						2.7681PHT	3.7701				
All engines										9.6007 C10		
2.2	Petrol	70	05/89-06/94	ENGINE J7T 780								
Engine	Information											
All engines							2.7665PHT			9.6007 C10		4.8539
All engines	version Ducellier						2.7666PHT	3.7694				
2.2	Petrol	74	06/94-04/98	ENGINE J7T 600								
Engine	Information											
All engines							2.7665PHT			9.6007 C10		4.8539
All engines	version Ducellier						2.7666PHT	3.7694				

A10	CONDENSER	A20	CONTACT SET	A40	DISTRIBUTOR CAP	A50	ROTOR	A70	PICK-UP
C10	COIL	C20	IGNITION MODULE	C30	ELECTRONIC IGNITION KIT	E01	IGNITION CABLE SET		

The present application list is a brief version. For the detailed information about the possibility of installation on a specific vehicle, please refer to our web-catalogue http://catalogo.facet.eu/

Vehicle	alim.	kW	Date	Engine	FUNCTIONS ON THE VEHICLE							
					A10	A20	A40	A50	A70	C10 - C30	C20	E01
2.2 4x4	Petrol	70	05/89-06/94	ENGINE: J7T 780								
Engine: All engines	Information:						2.7665PHT			9.6007 C10		4.8539
Engine: All engines	Information: version Ducellier						2.7666PHT	3.7694				
2.2 4x4	Petrol	74	06/94-04/98	ENGINE: J7T 600								
Engine: All engines	Information:						2.7665PHT			9.6007 C10		4.8539
Engine: All engines	Information: version Ducellier						2.7666PHT	3.7694				
TRAFIC II												
2.0	Petrol	88	03/01->	ENGINE: F4R 720, F4R 722								
Engine: Eng. F4R 720	Information: x 4, SAGEM, COIL ON PLUG									9.6332 C10		
Engine: Eng. F4R 722	Information: Qty: 4									9.6332 C10		
2.0 16V	Petrol	86	08/06->	ENGINE: F4R 820								
Engine: All engines	Information: x 4, SAGEM, COIL ON PLUG									9.6332 C10		
TWINGO I												
1.0 16V	Petrol	51	01/01->	ENGINE: D4D 712								
Engine: All engines	Information:									9.6319 C10		
1.2	Petrol	40	03/93-03/07	ENGINE: C3G 700, C3G 702, D7F 700, D7F 701								
Engine: Eng. C3G 700, C3G 702	Information: version Ducellier						2.7659PHT	3.7688				
Engine: Eng. C3G 700, C3G 702	Information:									9.6128 C10		4.9332
Engine: Eng. D7F 700, D7F 701	Information: ->year 21/10/98									9.6265 C10		
Engine: Eng. D7F 700, D7F 701	Information: 21/10/98 ->									9.6496 C10		
Engine: Eng. D7F 700, D7F 701	Information: ->year 08/10/99											4.9447
Engine: Eng. D7F 700, D7F 701	Information: 08/10/99 ->											4.9681
1.2	Petrol	43	05/96-06/07	ENGINE: D7F 700, D7F 701, D7F 702, D7F 703, D7F 704, D7F 706								
Engine: All engines	Information: ->year 21/10/98									9.6265 C10		
Engine: All engines	Information: 21/10/98 ->									9.6496 C10		
Engine: All engines	Information: ->year 08/10/99											4.9447
Engine: All engines	Information: 08/10/99 ->											4.9681
1.2	Petrol	44	09/98-08/00	ENGINE: D7F 702, D7F 703, D7F 704								
Engine: All engines	Information: ->year 21/10/98									9.6265 C10		
Engine: All engines	Information: 21/10/98 ->									9.6496 C10		
Engine: All engines	Information: ->year 08/10/99											4.9447
Engine: All engines	Information: 08/10/99 ->											4.9681
1.2 16V	Petrol	44	08/04-06/07	ENGINE: D4F 708								
Engine: All engines	Information:									9.6418 C10		4.7246
1.2 16V	Petrol	55	01/01-06/07	ENGINE: D4F 702								
Engine: All engines	Information:									9.6319 C10		

A10	CONDENSER	A20	CONTACT SET	A40	DISTRIBUTOR CAP	A50	ROTOR	A70	PICK-UP
C10	COIL	C20	IGNITION MODULE	C30	ELECTRONIC IGNITION KIT	E01	IGNITION CABLE SET		

The present application list is a brief version. For the detailed information about the possibility of installation on a specific vehicle, please refer to our web-catalogue http://catalogo.facet.eu/

Vehicle	alim.	kW	Date	Engine	FUNCTIONS ON THE VEHICLE A10	A20	A40	A50	A70	C10 - C30	C20	E01

TWINGO II

				ENGINE
1.2	Petrol	43	03/07-09/14	D7F 800

Engine	Information	A10	A20	A40	A50	A70	C10 - C30		C20	E01
All engines	x 1, D.I.S.						9.6496	C10		
All engines										4.7230

				ENGINE
1.2	Petrol	55	09/10-09/14	D4F 770

Engine	Information	A10	A20	A40	A50	A70	C10 - C30		C20	E01
All engines	x 1, D.I.S.						9.6418	C10		

				ENGINE
1.2 16V	Petrol	55	03/07->	D4F 764, D4F 770, D4F 772

Engine	Information	A10	A20	A40	A50	A70	C10 - C30		C20	E01
Eng. D4F 764							9.6418	C10		
Eng. D4F 770, D4F 772	x 1, D.I.S.						9.6418	C10		
All engines										4.7246

				ENGINE
1.2 16V	Petrol	56	03/07->	D4F 772

Engine	Information	A10	A20	A40	A50	A70	C10 - C30		C20	E01
All engines	x 1, D.I.S.						9.6418	C10		
All engines										4.7246

				ENGINE
1.2 TCe 100	Petrol	75	02/11->	D4F 780, D4F 782

Engine	Information	A10	A20	A40	A50	A70	C10 - C30		C20	E01
Eng. D4F 780	x 1, D.I.S.						9.6496	C10		
Eng. D4F 782							9.6496	C10		
All engines										4.7229

				ENGINE
1.2 Turbo	Petrol	74	03/07-09/14	D4F 780, D4F 782

Engine	Information	A10	A20	A40	A50	A70	C10 - C30		C20	E01
All engines	x 1, D.I.S.						9.6496	C10		
All engines										4.7229

				ENGINE
1.6 RS	Petrol	98	05/08-09/14	K4M 854

Engine	Information	A10	A20	A40	A50	A70	C10 - C30		C20	E01
All engines	x 4, SAGEM, COIL ON PLUG						9.6332	C10		

TWINGO III

				ENGINE
0.9 TCe 110	Petrol	80	11/16->	H4B 401

Engine	Information	A10	A20	A40	A50	A70	C10 - C30		C20	E01
All engines	x 3, COIL ON PLUG						9.6513	C10		

				ENGINE
0.9 TCe 90	Petrol	66	09/14->	H4B 401

Engine	Information	A10	A20	A40	A50	A70	C10 - C30		C20	E01
All engines	x 3, COIL ON PLUG						9.6513	C10		

				ENGINE
0.9 TCe 90 LPG	Petrol/ Liquified Petro-leum Gas (LPG)	66	08/18->	H4B 451

Engine	Information	A10	A20	A40	A50	A70	C10 - C30		C20	E01
All engines	x 3, COIL ON PLUG						9.6513	C10		

				ENGINE
0.9 TCe 95	Petrol	68	03/19->	H4B 453

Engine	Information	A10	A20	A40	A50	A70	C10 - C30		C20	E01
All engines	x 3, COIL ON PLUG						9.6452	C10		

				ENGINE
1.0 SCe 70	Petrol	51	09/15->	H4D 400

Engine	Information	A10	A20	A40	A50	A70	C10 - C30		C20	E01
All engines	x 3, COIL ON PLUG						9.6513	C10		

A10	CONDENSER	A20	CONTACT SET	A40	DISTRIBUTOR CAP	A50	ROTOR	A70	PICK-UP
C10	COIL	C20	IGNITION MODULE	C30	ELECTRONIC IGNITION KIT	E01	IGNITION CABLE SET		

The present application list is a brief version. For the detailed information about the possibility of installation on a specific vehicle, please refer to our web-catalogue http://catalogo.facet.eu/

Vehicle	alim.	kW	Date	Engine	FUNCTIONS ON THE VEHICLE							
					A10	A20	A40	A50	A70	C10 - C30	C20	E01
1.0 SCe 70	Petrol	52	09/14->	ENGINE H4D 400								
Engine: All engines	Information: x 3, COIL ON PLUG									9.6513 C10		
VEL SATIS												
2.0 16 V Turbo	Petrol	125	04/04->	ENGINE F4R 766, F4R 767								
Engine: All engines	Information: x 4, SAGEM, COIL ON PLUG									9.6332 C10		
2.0 16V Turbo	Petrol	120	06/02-08/09	ENGINE F4R 762, F4R 763								
Engine: All engines	Information: x 4, SAGEM, COIL ON PLUG									9.6332 C10		
2.0 Turbo	Petrol	108	04/05->	ENGINE F4R 767, F4R 867								
Engine: All engines	Information: x 4, SAGEM, COIL ON PLUG									9.6332 C10		
WIND												
1.2	Petrol	74	07/10->	ENGINE D4F 782								
Engine: All engines	Information: x 1, D.I.S.									9.6496 C10		
Engine: All engines	Information:											4.7229
1.2 TCe 100	Petrol	75	02/11->	ENGINE D4F 782								
Engine: All engines	Information: ->year 01/11/11, x 1, D.I.S. ---------- 01/12/11 ->, x 1, D.I.S.									9.6496 C10		
1.6	Petrol	98	07/10->	ENGINE K4M 854								
Engine: All engines	Information: x 4, SAGEM, COIL ON PLUG									9.6332 C10		

A10	CONDENSER	A20	CONTACT SET	A40	DISTRIBUTOR CAP	A50	ROTOR	A70	PICK-UP
C10	COIL	C20	IGNITION MODULE	C30	ELECTRONIC IGNITION KIT	E01	IGNITION CABLE SET		

The present application list is a brief version. For the detailed information about the possibility of installation on a specific vehicle, please refer to our web-catalogue http://catalogo.facet.eu/

Vehicle	alim.	kW	Date	Engine	FUNCTIONS ON THE VEHICLE							
					A10	A20	A40	A50	A70	C10 - C30	C20	E01

4/72

				ENGINE
1.7	Petrol	51	03/61-10/68	--

Engine	Information	A10	A20	A40	A50	A70	C10 - C30	C20	E01
All engines				2.8075	3.8106				

ELF

				ENGINE
1.0	Petrol	28	03/63-10/68	--

Engine	Information	A10	A20	A40	A50	A70	C10 - C30	C20	E01
All engines				2.8075	3.8106				

KESTREL

				ENGINE
1100	Petrol	40	03/65-04/67	--, 10 H

Engine	Information	A10	A20	A40	A50	A70	C10 - C30	C20	E01
All engines					3.8106				

				ENGINE
1300	Petrol	52	03/67-12/69	12 H

Engine	Information	A10	A20	A40	A50	A70	C10 - C30	C20	E01
All engines				2.8075	3.8106				

A10	CONDENSER	A20	CONTACT SET	A40	DISTRIBUTOR CAP	A50	ROTOR	A70	PICK-UP
C10	COIL	C20	IGNITION MODULE	C30	ELECTRONIC IGNITION KIT	E01	IGNITION CABLE SET		

The present application list is a brief version. For the detailed information about the possibility of installation on a specific vehicle, please refer to our web-catalogue http://catalogo.facet.eu/

Vehicle	alim.	kW	Date	Engine	FUNCTIONS ON THE VEHICLE							
					A10	A20	A40	A50	A70	C10 - C30	C20	E01

CULLINAN

				ENGINE
V12	Petrol	420	08/18->	N74 B68 A

Engine	Information	A10	A20	A40	A50	A70	C10 - C30		C20	E01
All engines	x 12, DELPHI, COIL ON PLUG						9.6375	C10		

				ENGINE
V12	Petrol	441	08/19->	N74 B68 A

Engine	Information	A10	A20	A40	A50	A70	C10 - C30		C20	E01
All engines	x 12, DELPHI, COIL ON PLUG						9.6375	C10		

DAWN

				ENGINE
V12	Petrol	420	02/16->	N74 B66 A

Engine	Information	A10	A20	A40	A50	A70	C10 - C30		C20	E01
All engines	x 12, DELPHI, COIL ON PLUG						9.6375	C10		

				ENGINE
V12	Petrol	442	07/17->	N74 B66 A

Engine	Information	A10	A20	A40	A50	A70	C10 - C30		C20	E01
All engines	x 12, DELPHI, COIL ON PLUG						9.6375	C10		

GHOST

				ENGINE
V12	Petrol	420	12/09->	N74 B66 A, N74 B68 A

Engine	Information	A10	A20	A40	A50	A70	C10 - C30		C20	E01
All engines	x 12, DELPHI, COIL ON PLUG						9.6375	C10		

				ENGINE
V12	Petrol	450	03/16-03/20	N74 B66 A

Engine	Information	A10	A20	A40	A50	A70	C10 - C30		C20	E01
All engines	x 12, DELPHI, COIL ON PLUG						9.6375	C10		

				ENGINE
V-Specification	Petrol	442	01/14-06/14	N74 B66 A

Engine	Information	A10	A20	A40	A50	A70	C10 - C30		C20	E01
All engines	x 12, DELPHI, COIL ON PLUG						9.6375	C10		

PHANTOM

				ENGINE
6.75 V12	Petrol	338	06/07-07/17	N73 B68 A

Engine	Information	A10	A20	A40	A50	A70	C10 - C30		C20	E01
All engines	x 12, COIL ON PLUG, DELPHI, ELDOR, COIL ON PLUG						9.6375	C10		

				ENGINE
V12	Petrol	338	01/03-07/17	N73 B68 A

Engine	Information	A10	A20	A40	A50	A70	C10 - C30		C20	E01
All engines	x 12, COIL ON PLUG, DELPHI, ELDOR, COIL ON PLUG						9.6375	C10		

				ENGINE
V12, V12 EWB	Petrol	420	09/17->	N74 B68 A

Engine	Information	A10	A20	A40	A50	A70	C10 - C30		C20	E01
All engines	x 12, DELPHI, COIL ON PLUG						9.6375	C10		

WRAITH

				ENGINE
V12	Petrol	441	07/19->	N74 B66 A

Engine	Information	A10	A20	A40	A50	A70	C10 - C30		C20	E01
All engines	x 12, DELPHI, COIL ON PLUG						9.6375	C10		

				ENGINE
V12	Petrol	465	08/13->	N74 B66 A

Engine	Information	A10	A20	A40	A50	A70	C10 - C30		C20	E01
All engines	x 12, DELPHI, COIL ON PLUG						9.6375	C10		

A10	CONDENSER	A20	CONTACT SET	A40	DISTRIBUTOR CAP	A50	ROTOR	A70	PICK-UP
C10	COIL	C20	IGNITION MODULE	C30	ELECTRONIC IGNITION KIT	E01	IGNITION CABLE SET		

The present application list is a brief version. For the detailed information about the possibility of installation on a specific vehicle, please refer to our web-catalogue http://catalogo.facet.eu/

Vehicle	alim.	kW	Date	Engine	FUNCTIONS ON THE VEHICLE							
					A10	A20	A40	A50	A70	C10 - C30	C20	E01
100												
				ENGINE								
111	Petrol	44	04/94-10/97	**11 K2D**								
Engine	Information				A10	A20	A40	A50	A70	C10 - C30	C20	E01
All engines	version Lucas						2.8093PHT	3.8129RS				
				ENGINE								
114	Petrol	55	04/94-10/97	**14 K2A, 14 K2D**								
Engine	Information				A10	A20	A40	A50	A70	C10 - C30	C20	E01
Eng. 14 K2D	version Lucas						2.8093PHT	3.8129RS				
Eng. 14 K2A	version Lucas						2.8094PHT	3.8125				
100 / METRO												
				ENGINE								
111 C/L/S	Petrol	44	03/90-12/98	**11 K2A, 11 K2D**								
Engine	Information				A10	A20	A40	A50	A70	C10 - C30	C20	E01
Eng. 11 K2D	version Lucas						2.8093PHT	3.8129RS				
Eng. 11 K2A	version Lucas						2.8094PHT	3.8125				
				ENGINE								
114 GSi	Petrol	76	10/94-10/95	**14 K4F**								
Engine	Information				A10	A20	A40	A50	A70	C10 - C30	C20	E01
All engines	version Lucas						2.8093PHT	3.8129RS				
				ENGINE								
114 GTI 16V	Petrol	69	03/90-08/91	**14 K4C, 14 K4D**								
Engine	Information				A10	A20	A40	A50	A70	C10 - C30	C20	E01
All engines	version Lucas						2.8093PHT	3.8129RS				
				ENGINE								
114 GTI 16V	Petrol	76	08/91-12/98	**14 K4F**								
Engine	Information				A10	A20	A40	A50	A70	C10 - C30	C20	E01
All engines	version Lucas						2.8093PHT	3.8129RS				
				ENGINE								
114 GTI/GT 16V Cat	Petrol	66	03/90-12/98	**14 K4C, 14 K4D**								
Engine	Information				A10	A20	A40	A50	A70	C10 - C30	C20	E01
All engines	version Lucas						2.8093PHT	3.8129RS				
				ENGINE								
114 S/L/GTA	Petrol	55	03/90-12/98	**14 K2A, 14 K2D**								
Engine	Information				A10	A20	A40	A50	A70	C10 - C30	C20	E01
Eng. 14 K2D	version Lucas						2.8093PHT	3.8129RS				
Eng. 14 K2A	version Lucas						2.8094PHT	3.8125				
200 I												
				ENGINE								
213 S	Petrol	54	09/85-09/89	**EV 2**								
Engine	Information				A10	A20	A40	A50	A70	C10 - C30	C20	E01
All engines	version Mitsubishi						2.7922	3.7956				
200 II												
				ENGINE								
214	Petrol	55	09/93-12/95	**14 K2A, 14 K2D**								
Engine	Information				A10	A20	A40	A50	A70	C10 - C30	C20	E01
All engines	version Lucas						2.8093PHT					
All engines								3.8129RS				
				ENGINE								
214 1.4	Petrol	66	01/92-11/99	**14 K4C, 14 K4D**								
Engine	Information				A10	A20	A40	A50	A70	C10 - C30	C20	E01
All engines	version Lucas						2.8093PHT	3.8129RS				
				ENGINE								
214 1.4i 16V	Petrol	76	01/93-11/99	**14 K4F**								
Engine	Information				A10	A20	A40	A50	A70	C10 - C30	C20	E01
All engines	version Lucas						2.8093PHT	3.8129RS				
				ENGINE								
214 GSi/Si	Petrol	70	01/90-10/95	**14 K4C**								
Engine	Information				A10	A20	A40	A50	A70	C10 - C30	C20	E01
All engines	version Lucas						2.8093PHT	3.8129RS				
All engines	01/01/95 ->									9.6274 C10		

A10	CONDENSER	**A20**	CONTACT SET	**A40**	DISTRIBUTOR CAP	**A50**	ROTOR	**A70**	PICK-UP
C10	COIL	**C20**	IGNITION MODULE	**C30**	ELECTRONIC IGNITION KIT	**E01**	IGNITION CABLE SET		

The present application list is a brief version. For the detailed information about the possibility of installation on a specific vehicle, please refer to our web-catalogue http://catalogo.facet.eu/

Vehicle	alim.	kW	Date	Engine	FUNCTIONS ON THE VEHICLE							
					A10	A20	A40	A50	A70	C10 - C30	C20	E01
214 GSi/Si	Petrol	76	12/92-10/95	**ENGINE 14 K4F**								
Engine: All engines — Information: version Lucas							2.8093PHT	3.8129RS				
214 Si/Gsi	Petrol	66	10/89-10/95	**ENGINE 14 K4C, 14 K4D**								
Engine: All engines — Information: version Lucas							2.8093PHT	3.8129RS				
216	Petrol	82	01/96-12/97	**ENGINE 16 K4F**								
Engine: All engines — Information: version Lucas							2.8093PHT					
Engine: All engines — Information:								3.8129RS				4.9888
216	Petrol	90	10/92-06/99	**ENGINE D 16 A8**								
Engine: All engines — Information:										9.6113 C10	9.4052	
216 1.6i	Petrol	90	01/92-11/99	**ENGINE D 16 A8**								
Engine: All engines — Information:										9.6113 C10	9.4052	
216 1.6i 16V	Petrol	82	01/96-11/99	**ENGINE 16 K4F**								
Engine: All engines — Information: version Lucas							2.8093PHT					
Engine: All engines — Information:								3.8129RS				4.9888
Engine: All engines — Information: x 1, DISTRIBUTOR										9.6274 C10		
216 GSi	Petrol	82	01/90-12/95	**ENGINE 1GH5E-180**								
Engine: All engines — Information: ->eng. E100000, version Hitachi							2.7969					
Engine: All engines — Information: eng. type E100001 ->, version Hitachi								3.7982				
Engine: All engines — Information:										9.6113 C10	9.4052	
216 GSi	Petrol	85	10/89-10/95	**ENGINE D 16 A7**								
Engine: All engines — Information: ->eng. E100000, version Hitachi							2.7969					
Engine: All engines — Information: eng. type E100001 ->, version Hitachi								3.7982				
Engine: All engines — Information:										9.6113 C10		
216 GTi	Petrol	90	01/90-10/95	**ENGINE D 16 A8**								
Engine: All engines — Information: ->eng. E100000, version Hitachi							2.7969	3.7982				
Engine: All engines — Information:										9.6113 C10	9.4052	
216 GTi	Petrol	96	09/90-10/95	**ENGINE D 16 A9**								
Engine: All engines — Information: ->eng. E100000, version Hitachi							2.7969	3.7982				
Engine: All engines — Information:										9.6113 C10		
220 GSi	Petrol	100	05/94-06/99	**ENGINE 1CA4GA15-01**								
Engine: All engines — Information: version Lucas							2.8093PHT					
Engine: All engines — Information:								3.8129RS				
220 GTi	Petrol	100	01/93-10/95	**ENGINE 1CA4GA15-01**								
Engine: All engines — Information: version Lucas							2.8093PHT					
Engine: All engines — Information:								3.8129RS				

A10	CONDENSER	**A20**	CONTACT SET	**A40**	DISTRIBUTOR CAP	**A50**	ROTOR	**A70**	PICK-UP
C10	COIL	**C20**	IGNITION MODULE	**C30**	ELECTRONIC IGNITION KIT	**E01**	IGNITION CABLE SET		

The present application list is a brief version. For the detailed information about the possibility of installation on a specific vehicle, please refer to our web-catalogue http://catalogo.facet.eu/

Vehicle	alim.	kW	Date	Engine	FUNCTIONS ON THE VEHICLE A10	A20	A40	A50	A70	C10 - C30	C20	E01
220 GTi	Petrol	103	09/91-10/95	**20 M4F**								

Engine	Information	A10	A20	A40	A50	A70	C10 - C30	C20	E01
All engines	version Lucas			2.8093PHT					
All engines	->year 31/01/92, version Lucas				3.8124RS				
All engines	01/02/92 ->, version Lucas				3.8129RS				

220 Turbo	Petrol	147	10/92-06/99	**20 T4G**								

Engine	Information	A10	A20	A40	A50	A70	C10 - C30	C20	E01
All engines	version Lucas			2.8093PHT					
All engines					3.8129RS				

200 III

1.4	Petrol	66	01/96-12/97	**14 K4D**								

Engine	Information	A10	A20	A40	A50	A70	C10 - C30	C20	E01
All engines	x 1, DISTRIBUTOR						9.6274 C10		

211	Petrol	44	01/98-03/00	**11 K2D**								

Engine	Information	A10	A20	A40	A50	A70	C10 - C30	C20	E01
All engines	version Lucas			2.8093PHT	3.8129RS				
All engines	x 1, DISTRIBUTOR						9.6274 C10		
All engines									4.9914

214 i	Petrol	55	11/95-03/00	**14 K2F**								

Engine	Information	A10	A20	A40	A50	A70	C10 - C30	C20	E01
All engines	version Lucas			2.8093PHT	3.8129RS				
All engines	x 1, DISTRIBUTOR						9.6274 C10		
All engines									4.9914

214 Si	Petrol	76	11/95-03/00	**14 K4F**								

Engine	Information	A10	A20	A40	A50	A70	C10 - C30	C20	E01
All engines	->ch. YD471564, version Lucas			2.8093PHT	3.8129RS				
All engines	x 1, DISTRIBUTOR						9.6274 C10		
All engines	->ch. YD471564								4.9888
All engines	ch. YD471565 ->								4.9889

216 Si	Petrol	82	11/95-06/99	**16 K4F**								

Engine	Information	A10	A20	A40	A50	A70	C10 - C30	C20	E01
All engines	->ch. YD471564, version Lucas			2.8093PHT	3.8129RS				
All engines	->ch. 471564, x 1, DISTRIBUTOR						9.6274 C10		
All engines	->ch. YD471564								4.9888
All engines	ch. YD471565 ->								4.9889

2000-3500

2000	Petrol	74	10/82-10/86	--								

Engine	Information	A10	A20	A40	A50	A70	C10 - C30	C20	E01
All engines	version Lucas			2.8094PHT	3.8126RS				

2200	Petrol	83	10/73-05/76	--								

Engine	Information	A10	A20	A40	A50	A70	C10 - C30	C20	E01
All engines			1.4683MHDV	2.8075					

25

1.1	Petrol	44	11/99-05/05	**11K2F**								

Engine	Information	A10	A20	A40	A50	A70	C10 - C30	C20	E01
All engines	x 1, DISTRIBUTOR						9.6274 C10		

1.1	Petrol	55	09/99-06/01	**11 K4F**								

Engine	Information	A10	A20	A40	A50	A70	C10 - C30	C20	E01
All engines	x 1, DISTRIBUTOR						9.6274 C10		

A10	CONDENSER	**A20**	CONTACT SET	**A40**	DISTRIBUTOR CAP	**A50**	ROTOR	**A70**	PICK-UP
C10	COIL	**C20**	IGNITION MODULE	**C30**	ELECTRONIC IGNITION KIT	**E01**	IGNITION CABLE SET		

The present application list is a brief version. For the detailed information about the possibility of installation on a specific vehicle, please refer to our web-catalogue http://catalogo.facet.eu/

Vehicle	alim.	kW	Date	Engine	FUNCTIONS ON THE VEHICLE							
					A10	A20	A40	A50	A70	C10 - C30	C20	E01
1.1 16V	Petrol	55	01/04-05/05	**11 K4F**								
All engines	x 1, DISTRIBUTOR									9.6274 C10		
1.4	Petrol	62	01/03-12/05	**14 K4M**								
All engines	->ch. 471564, x 1, DISTRIBUTOR									9.6274 C10		
1.4 16V	Petrol	62	10/99-05/05	**14 K4M**								
All engines	->ch. YD471564, version Lucas						2.8093PHT	3.8129RS				
All engines	->ch. 471564, x 1, DISTRIBUTOR									9.6274 C10		
All engines	->ch. YD471564											4.9888
All engines	ch. YD471565 ->											4.9889
1.4 16V	Petrol	76	10/99-05/05	**14 K4F**								
All engines	->ch. YD471564, version Lucas						2.8093PHT	3.8129RS				
All engines	->ch. 471564, x 1, DISTRIBUTOR									9.6274 C10		
All engines	->ch. YD471564											4.9888
All engines	ch. YD471565 ->											4.9889
1.6 16V	Petrol	80	10/99-05/05	**16 K4F**								
All engines	->ch. YD471564, version Lucas						2.8093PHT	3.8129RS				
All engines	->ch. 471564, x 1, DISTRIBUTOR									9.6274 C10		
All engines	->ch. YD471564											4.9888
All engines	ch. YD471565 ->											4.9889
1.8 16V	Petrol	85	10/99-05/05	**18 K4F**								
All engines	->ch. YD471564, version Lucas						2.8093PHT	3.8129RS				
All engines	->ch. 471564, x 1, DISTRIBUTOR									9.6274 C10		
All engines	->ch. YD471564											4.9888
All engines	ch. YD471565 ->											4.9889
400 I												
1.6 i	Petrol	82	05/94-11/98	**16 K4F**								
All engines	version Lucas						2.8093PHT					
All engines								3.8129RS		9.6274 C10		4.9888
1.6 i	Petrol	90	05/94-11/98	**D 16 A8**								
All engines	version Lucas						2.8093PHT					
All engines								3.8129RS		9.6274 C10		4.9888
2.0 i	Petrol	100	05/94-11/98	**1CA4GA15-01**								
All engines										9.6089 C10		
414	Petrol	70	01/93-04/95	**14 K4C**								
All engines	version Lucas						2.8093PHT	3.8129RS				
All engines	01/01/95 ->									9.6274 C10		
414 GSI/SI	Petrol	66	04/90-04/95	**14 K4C, 14 K4D**								
All engines	version Lucas						2.8093PHT	3.8129RS				

A10	CONDENSER	**A20**	CONTACT SET	**A40**	DISTRIBUTOR CAP	**A50**	ROTOR	**A70**	PICK-UP
C10	COIL	**C20**	IGNITION MODULE	**C30**	ELECTRONIC IGNITION KIT	**E01**	IGNITION CABLE SET		

The present application list is a brief version. For the detailed information about the possibility of installation on a specific vehicle, please refer to our web-catalogue http://catalogo.facet.eu/

Vehicle	alim.	kW	Date	Engine	FUNCTIONS ON THE VEHICLE							
					A10	A20	A40	A50	A70	C10 - C30	C20	E01
414 GSI/SI Cat	Petrol	76	10/92-04/95	ENGINE 14 K4F								
All engines	version Lucas						2.8093PHT	3.8129RS				
416 GSI	Petrol	82	04/90-04/95	ENGINE 1GH5E-180								
All engines										9.6113 C10	9.4052	
416 GSI/GSE	Petrol	85	04/90-04/95	ENGINE D 16 A7								
All engines										9.6113 C10	9.4052	
416 GTI	Petrol	90	04/90-04/95	ENGINE D 16 A8								
All engines										9.6113 C10	9.4052	
416 GTI/GTE	Petrol	96	04/90-04/95	ENGINE D 16 A9								
All engines	->eng. E100000, version Hitachi						2.7969	3.7982				
All engines										9.6113 C10		
420 GSI/SLI/GTI/Vite	Petrol	100	01/93-04/95	ENGINE 1CA4GA15-01								
All engines	version Lucas						2.8093PHT					
All engines								3.8129RS				
420 GTI/GSI/Vitesse	Petrol	103	02/92-04/95	ENGINE 20 M4F								
All engines	version Lucas						2.8093PHT					
All engines	->year 31/01/92, version Lucas							3.8124RS				
All engines	01/02/92 ->, version Lucas							3.8129RS				
420 Turbo	Petrol	147	01/93-04/95	ENGINE 20 T4G								
All engines	version Lucas						2.8093PHT					
All engines								3.8129RS				
400 II												
414	Petrol	55	03/96-12/99	ENGINE 14 K2F								
All engines	x 1, DISTRIBUTOR									9.6274 C10		
414 Si	Petrol	76	05/95-03/00	ENGINE 14 K4F								
All engines	version Lucas						2.8093PHT	3.8129RS				
All engines	x 1, DISTRIBUTOR									9.6274 C10		
All engines												4.9888
416 Si	Petrol	82	05/95-03/00	ENGINE 16 K4F								
All engines	version Lucas						2.8093PHT	3.8129RS				
All engines	ch. 74465 ->, x 1, DISTRIBUTOR									9.6247 C10		
All engines	->ch. 74464, x 1, DISTRIBUTOR									9.6274 C10		
All engines												4.9888
416 Si	Petrol	83	03/95-03/00	ENGINE D 16 Y2, D 16 Y3								
Eng. D 16 Y2	+automatic transmission, ->ch. AD074464, version Hitachi						2.7968	3.7995				
Eng. D 16 Y2	+automatic transmission, ->ch. AD250028, ch. AD074465 ->, version Hitachi						2.7982	3.7998				
Eng. D 16 Y2	+manual transmission, version Lucas						2.8093PHT					

A10	CONDENSER	**A20**	CONTACT SET	**A40**	DISTRIBUTOR CAP	**A50**	ROTOR	**A70**	PICK-UP
C10	COIL	**C20**	IGNITION MODULE	**C30**	ELECTRONIC IGNITION KIT	**E01**	IGNITION CABLE SET		

The present application list is a brief version. For the detailed information about the possibility of installation on a specific vehicle, please refer to our web-catalogue http://catalogo.facet.eu/

Vehicle	alim.	kW	Date	Engine	FUNCTIONS ON THE VEHICLE							
					A10	A20	A40	A50	A70	C10 - C30	C20	E01
416 Si	Petrol	83	03/95-03/00	**ENGINE** D 16 Y2, D 16 Y3								
Eng. D 16 Y2	+automatic transmission, ch. WD250029 ->, version Lucas						2.8106					
Eng. D 16 Y2	+automatic transmission, ch. WD250029 ->, version Hitachi							3.8002				
Eng. D 16 Y2	+manual transmission							3.8129RS		9.6274 C10		4.9888
Eng. D 16 Y2	+automatic transmission, ->ch. AD074464									9.6114 C10		
Eng. D 16 Y3	->ch. 74464, x 1, DISTRIBUTOR									9.6114 C10		
Eng. D 16 Y2	+automatic transmission, ->ch. AD250028, ch. AD074465 ->									9.6247 C10		
Eng. D 16 Y3	ch. 74465 ->, x 1, DISTRIBUTOR									9.6247 C10		
416 Si	Petrol	85	05/95-03/00	**ENGINE** D16B2								
All engines	->ch. 74464, x 1, DISTRIBUTOR									9.6114 C10		
All engines	ch. 74465 ->, x 1, DISTRIBUTOR									9.6247 C10		
420 Si Lux	Petrol	100	12/95-03/00	**ENGINE** 1CA4GA15-01, 20 M4F								
Eng. 1CA4GA15-01										9.6089 C10		
Eng. 20 M4F	x 1, D.I.S.									9.6089 C10		
45												
1.4	Petrol	76	02/00-05/05	**ENGINE** 14 K4F								
All engines												4.9889
1.6	Petrol	80	02/00-05/05	**ENGINE** 16 K4F								
All engines												4.9889
1.8	Petrol	86	02/00-05/05	**ENGINE** 18 K4F								
All engines												4.9889
2.0 V6	Petrol	110	02/00-05/05	**ENGINE** 20 K4F								
All engines	x 1, LONG, SHORT, BREMI, D.I.S.									9.6313 C10		
600												
618 i/Si	Petrol	85	03/96-02/99	**ENGINE** F 18 A3								
All engines	->ch. AM246796, version Hitachi						2.7968	3.7995				
All engines	ch. BM246797 ->, version Hitachi						2.7982	3.7998				
All engines	->ch. AM246796									9.6114 C10	9.4052	
All engines	ch. BM246797 ->									9.6247 C10		
All engines												4.9711
620 i	Petrol	85	08/93-06/96	**ENGINE** F 20 Z2								
All engines	->ch. 246796, version Hitachi						2.7968	3.7995				
All engines	ch. 246797 ->, version Hitachi						2.7982	3.7998				
All engines	->ch. 246796									9.6114 C10	9.4052	
All engines	ch. 246797 ->									9.6247 C10		
All engines												4.9711
620 Si	Petrol	96	08/93-02/99	**ENGINE** F 20 Z1								
All engines	->ch. 246796, version Hitachi						2.7968	3.7995				
All engines	ch. 246797 ->, version Hitachi						2.7982	3.7998				
All engines	->ch. 246796									9.6114 C10	9.4052	
All engines	ch. 246797 ->									9.6247 C10		

A10	CONDENSER	A20	CONTACT SET	A40	DISTRIBUTOR CAP	A50	ROTOR	A70	PICK-UP
C10	COIL	C20	IGNITION MODULE	C30	ELECTRONIC IGNITION KIT	E01	IGNITION CABLE SET		

The present application list is a brief version. For the detailed information about the possibility of installation on a specific vehicle, please refer to our web-catalogue http://catalogo.facet.eu/

Vehicle	alim.	kW	Date	Engine	FUNCTIONS ON THE VEHICLE A10	A20	A40	A50	A70	C10 - C30	C20	E01
620 Si	Petrol	96	08/93-02/99	F 20 Z1								4.9711
620 Ti Vitesse	Petrol	147	05/94-08/98	20 T4G			2.8093PHT	3.8129RS				
										9.6089 C10		
623 Si	Petrol	116	08/93-06/99	H 23 A3			2.7968	3.7995				
										9.6114 C10	9.4052	
75												
1.8	Petrol	88	02/99-05/05	K 1.8								4.9889
1.8 Turbo	Petrol	110	05/03-05/05	--								4.9889
800												
820	Petrol	74	10/88-10/91	--			2.8093PHT	3.8124RS				
820 16V Turbo	Petrol	132	11/91-02/99	T 16			2.8093PHT	3.8129RS				
820 I/SI	Petrol	100	01/91-02/99	1CA4GA15-01			2.8093PHT	3.8129RS				
										9.6089 C10		
820 i/Si	Petrol	103	10/88-12/91	20 HD			2.8093PHT	3.8124RS				
820 SI	Petrol	98	10/88-12/91	20 HD M 16			2.8093PHT	3.8124RS				
820 Sport	Petrol	145	04/94-03/96	20 T4G			2.8093PHT	3.8129RS				
827 24V	Petrol	124	08/92-02/99	C 27 A1						9.6111 C10		
827 24V I/SI Cat	Petrol	124	01/92-02/99	C 27 A1						9.6111 C10		
827 SI/Sterling	Petrol	130	02/88-12/91	82RZ-FE						9.6111 C10		

Engine	Information
All engines	
All engines	->ch. AM246796, version Lucas
All engines	ch. BM246797 ->
All engines	version Hitachi
All engines	version Lucas
All engines	+manual transmission
All engines	->eng. 5100000, ->eng. 6300000, ->eng. 6450000, ->eng. 6900000

A10	CONDENSER	**A20**	CONTACT SET	**A40**	DISTRIBUTOR CAP	**A50**	ROTOR	**A70**	PICK-UP
C10	COIL	**C20**	IGNITION MODULE	**C30**	ELECTRONIC IGNITION KIT	**E01**	IGNITION CABLE SET		

The present application list is a brief version. For the detailed information about the possibility of installation on a specific vehicle, please refer to our web-catalogue http://catalogo.facet.eu/

Vehicle	alim.	kW	Date	Engine	FUNCTIONS ON THE VEHICLE: A10	A20	A40	A50	A70	C10 - C30	C20	E01
827 SI/Sterling Catalytic-Conv	Petrol	124	02/88-02/99	C 27 A1								
All engines	+manual transmission									9.6111 C10		
827 Vitesse Catalyti-c-Conv	Petrol	124	10/88-12/91	C 27 A1								
All engines	+manual transmission									9.6111 C10		
827 Vitesse/SLI	Petrol	130	10/88-12/91	82RZ-FE								
All engines	->eng. 5100000, ->eng. 6300000, ->eng. 6450000, ->eng. 6900000									9.6111 C10		
A60 CAMBRIDGE												
1.7	Petrol	46	01/62-10/69	--								
All engines						1.4683MHDV	2.8075	3.8106				
COUPE												
1.6 16 V	Petrol	82	03/96-11/99	16 K4F								
All engines	version Lucas							3.8129RS				
All engines												4.9888
MAESTRO												
1.3	Petrol	49	09/90-01/95	12 HE								
All engines	version Lucas						2.8094PHT	3.8125				
1.3	Petrol	51	09/90-01/95	12 HE								
All engines	version Lucas						2.8094PHT	3.8125				
1.6	Petrol	63	09/90-01/95	16 H								
All engines	version Lucas						2.8093PHT	3.8124RS				
MINI												
1.3i Cooper	Petrol	0	01/85->	--								
All engines	version Lucas						2.8094PHT	3.8125				
1.3i Turbo	Petrol	0	01/85->	--								
All engines	version Lucas						2.8094PHT	3.8125				
1300	Petrol	37	10/92-11/00	12 A2B								
All engines	version Lucas						2.8094PHT	3.8125				
All engines	ch. BD134455 ->									9.6089 C10		
1300	Petrol	39	01/92-04/95	12 A2D								
All engines	version Lucas						2.8094PHT	3.8125				
All engines	ch. BD134455 ->									9.6089 C10		
1300	Petrol	45	01/91-12/91	12 A2A								
All engines	version Lucas						2.8094PHT	3.8125				
All engines	ch. BD134455 ->									9.6089 C10		

A10	CONDENSER	A20	CONTACT SET	A40	DISTRIBUTOR CAP	A50	ROTOR	A70	PICK-UP
C10	COIL	C20	IGNITION MODULE	C30	ELECTRONIC IGNITION KIT	E01	IGNITION CABLE SET		

The present application list is a brief version. For the detailed information about the possibility of installation on a specific vehicle, please refer to our web-catalogue http://catalogo.facet.eu/

Vehicle	alim.	kW	Date	Engine	FUNCTIONS ON THE VEHICLE							
					A10	A20	A40	A50	A70	C10 - C30	C20	E01
				ENGINE								
1300	Petrol	46	01/92-11/00	12 A2E, 12 A2L								
Engine	Information											
All engines	version Lucas						2.8094PHT	3.8125				
All engines	ch. BD134455 ->									9.6089 C10		
MONTEGO												
				ENGINE								
1.3	Petrol	50	10/84-10/88	12 HL								
Engine	Information											
All engines	version Lucas						2.8094PHT	3.8125				
				ENGINE								
2.0 GTi	Petrol	86	02/85-10/91	20 H								
Engine	Information											
All engines	version Lucas						2.8093PHT	3.8124RS				
STREETWISE												
				ENGINE								
1.4	Petrol	62	08/03-05/05	14 K4M								
Engine	Information											
All engines	->ch. 471564, x 1, DISTRIBUTOR									9.6274 C10		
				ENGINE								
1.4	Petrol	76	08/03-05/05	14 K4F								
Engine	Information											
All engines	->ch. 471564, x 1, DISTRIBUTOR									9.6274 C10		
				ENGINE								
1.6	Petrol	80	01/04-05/05	16 K4F								
Engine	Information											
All engines	->ch. 471564, x 1, DISTRIBUTOR									9.6274 C10		

A10	CONDENSER	**A20**	CONTACT SET	**A40**	DISTRIBUTOR CAP	**A50**	ROTOR	**A70**	PICK-UP
C10	COIL	**C20**	IGNITION MODULE	**C30**	ELECTRONIC IGNITION KIT	**E01**	IGNITION CABLE SET		

The present application list is a brief version. For the detailed information about the possibility of installation on a specific vehicle, please refer to our web-catalogue http://catalogo.facet.eu/

Vehicle	alim.	kW	Date	Engine	FUNCTIONS ON THE VEHICLE: A10	A20	A40	A50	A70	C10 - C30	C20	E01

90

				ENGINE
2.0	Petrol	74	08/84-08/87	B 20 I

Engine	Information	A10	A20	A40	A50	A70	C10 - C30	C20	E01
All engines	version Bosch			2.7479PHT	3.7526RS				
All engines	MODEL FROM: 1986							9.4004	
All engines									4.9140

900 I

				ENGINE
2.0 -16	Petrol	92	01/86-12/88	B202XI

Engine	Information	A10	A20	A40	A50	A70	C10 - C30	C20	E01
All engines	version Bosch			2.7479PHT	3.7573/23RS				
All engines								9.4004	
All engines	FOR MODEL: 1988								4.9138

				ENGINE
2.0 -16	Petrol	93	01/89-06/94	5B 6304 GS

Engine	Information	A10	A20	A40	A50	A70	C10 - C30	C20	E01
All engines	version Bosch			2.7479PHT	3.7573/23RS				
All engines	FOR MODEL: 1989							9.4007	4.9138
All engines	MODEL FROM: 1990							9.4034	

				ENGINE
2.0 c	Petrol	74	09/79-12/88	B201XC

Engine	Information	A10	A20	A40	A50	A70	C10 - C30	C20	E01
All engines	version Bosch			2.7479PHT	3.7526RS				
All engines	FOR MODEL: 1988, version Bosch					8.2693			
All engines								9.4004	4.9140

				ENGINE
2.0 i	Petrol	81	09/85-08/90	0TLE4G15

Engine	Information	A10	A20	A40	A50	A70	C10 - C30	C20	E01
All engines	version Bosch			2.7479PHT	3.7526RS				
All engines	MODEL FROM: 1988, version Bosch					8.2693			
All engines	MODEL FROM: 1986, MODEL TO: 1988							9.4004	
All engines	MODEL FROM: 1989							9.4007	
All engines									4.9140

				ENGINE
2.0 i	Petrol	85	11/80-08/90	B201XI

Engine	Information	A10	A20	A40	A50	A70	C10 - C30	C20	E01
All engines	version Bosch			2.7479PHT	3.7526RS				
All engines	MODEL FROM: 1988, version Bosch					8.2693			
All engines	MODEL FROM: 1986, MODEL TO: 1988							9.4004	
All engines	MODEL FROM: 1989							9.4007	
All engines									4.9140

				ENGINE
2.0 S Turbo-16	Petrol	104	07/91-06/94	B202S

Engine	Information	A10	A20	A40	A50	A70	C10 - C30	C20	E01
All engines	version Bosch			2.7479PHT					
All engines	distr. num. 88 57 617, version Bosch					8.2744			
All engines								9.4007	

				ENGINE
2.0 S Turbo-16	Petrol	107	01/92-12/93	B202S

Engine	Information	A10	A20	A40	A50	A70	C10 - C30	C20	E01
All engines	version Bosch			2.7479PHT					
All engines	distr. num. 88 57 617, version Bosch					8.2744			
All engines								9.4007	

				ENGINE
2.0 Turbo	Petrol	103	10/86-12/91	B201XL

Engine	Information	A10	A20	A40	A50	A70	C10 - C30	C20	E01
All engines	version Bosch			2.7479PHT	3.7526RS				
All engines					3.7521RS				4.9140
All engines	MODEL FROM: 1988, version Bosch					8.2693			
All engines	MODEL TO: 1988							9.4004	
All engines	MODEL FROM: 1989							9.4007	

A10	CONDENSER	A20	CONTACT SET	A40	DISTRIBUTOR CAP	A50	ROTOR	A70	PICK-UP
C10	COIL	C20	IGNITION MODULE	C30	ELECTRONIC IGNITION KIT	E01	IGNITION CABLE SET		

The present application list is a brief version. For the detailed information about the possibility of installation on a specific vehicle, please refer to our web-catalogue http://catalogo.facet.eu/

Vehicle	alim.	kW	Date	Engine	FUNCTIONS ON THE VEHICLE A10	A20	A40	A50	A70	C10 - C30	C20	E01
2.0 Turbo	Petrol	110	01/86-12/88	ENGINE B201XL								

Engine	Information	A10	A20	A40	A50	A70	C10 - C30	C20	E01
All engines	version Bosch			2.7479PHT	3.7526RS				
All engines					3.7521RS				4.9140
All engines	MODEL FROM: 1988, version Bosch					8.2693			
All engines	MODEL TO: 1988							9.4004	
All engines	MODEL FROM: 1989							9.4007	

2.0 Turbo-16	Petrol	118	11/85-06/94	ENGINE B202XL

Engine	Information	A10	A20	A40	A50	A70	C10 - C30	C20	E01
All engines	version Bosch			2.7479PHT					
All engines	MODEL TO: 1989, version Bosch				3.7573/23RS				
All engines	distr. num. 88 57 617, version Bosch					8.2744			
All engines	MODEL TO: 1988							9.4004	
All engines	MODEL FROM: 1989							9.4007	
All engines	FOR MODEL: 1989								4.9138

2.0 Turbo-16	Petrol	132	01/93-06/94	ENGINE B202L

Engine	Information	A10	A20	A40	A50	A70	C10 - C30	C20	E01
All engines	version Bosch			2.7479PHT					
All engines	distr. num. 88 57 617, version Bosch					8.2744			
All engines	MODEL TO: 1988							9.4004	
All engines	MODEL FROM: 1989							9.4007	
All engines	FOR MODEL: 1989								4.9138

2.0 Turbo-16 S	Petrol	129	01/84-06/94	ENGINE B202XL

Engine	Information	A10	A20	A40	A50	A70	C10 - C30	C20	E01
All engines	version Bosch			2.7479PHT					
All engines	MODEL TO: 1989, version Bosch				3.7573/23RS				
All engines	distr. num. 88 57 617, version Bosch					8.2744			
All engines	MODEL TO: 1988							9.4004	
All engines	MODEL FROM: 1989							9.4007	
All engines	FOR MODEL: 1989								4.9138

2.0 Turbo-16 S Cat	Petrol	125	01/89-12/93	ENGINE B202XL

Engine	Information	A10	A20	A40	A50	A70	C10 - C30	C20	E01
All engines	version Bosch			2.7479PHT					
All engines	FOR MODEL: 1989, version Bosch				3.7573/23RS				
All engines	distr. num. 88 57 617, version Bosch					8.2744			
All engines	MODEL TO: 1988							9.4004	
All engines	MODEL FROM: 1989							9.4007	
All engines	FOR MODEL: 1989								4.9138

2.0 Turbo-16 S Cat	Petrol	129	01/89-12/93	ENGINE B202XL

Engine	Information	A10	A20	A40	A50	A70	C10 - C30	C20	E01
All engines	version Bosch			2.7479PHT					
All engines	FOR MODEL: 1989, version Bosch				3.7573/23RS				
All engines	distr. num. 88 57 617, version Bosch					8.2744			
All engines	MODEL TO: 1988							9.4004	
All engines	MODEL FROM: 1989							9.4007	

2.1 -16	Petrol	100	08/90-06/94	ENGINE B212I

Engine	Information	A10	A20	A40	A50	A70	C10 - C30	C20	E01
All engines	version Bosch			2.7479PHT	3.7573/23RS				

900 II

2.0 i	Petrol	96	12/93-02/98	ENGINE B204I

Engine	Information	A10	A20	A40	A50	A70	C10 - C30	C20	E01
All engines	version Bosch			2.7524PHT	3.7573/21RS				
All engines							9.6092 C10		

A10	CONDENSER	A20	CONTACT SET	A40	DISTRIBUTOR CAP	A50	ROTOR	A70	PICK-UP
C10	COIL	C20	IGNITION MODULE	C30	ELECTRONIC IGNITION KIT	E01	IGNITION CABLE SET		

The present application list is a brief version. For the detailed information about the possibility of installation on a specific vehicle, please refer to our web-catalogue http://catalogo.facet.eu/

Vehicle	alim.	kW	Date	Engine	FUNCTIONS ON THE VEHICLE A10	A20	A40	A50	A70	C10 - C30	C20	E01
2.0 i	Petrol	98	07/93-07/94	ENGINE B206I								

Engine	Information	A10	A20	A40	A50	A70	C10 - C30	C20	E01
All engines	version Bosch			2.7524PHT	3.7573/21RS				
All engines							9.6092 C10		

2.3 -16	Petrol	110	07/93-02/98	ENGINE B234I

Engine	Information	A10	A20	A40	A50	A70	C10 - C30	C20	E01
All engines	version Bosch			2.7524PHT	3.7573/21RS				
All engines							9.6092 C10		

9000

2.0 -16	Petrol	92	12/85-12/88	ENGINE B202XI

Engine	Information	A10	A20	A40	A50	A70	C10 - C30	C20	E01
All engines	version Bosch			2.7479PHT	3.7573/23RS				
All engines	EZK							9.4034	4.9138

2.0 -16	Petrol	94	12/85-01/93	ENGINE 5B 6304 GS, B202XI

Engine	Information	A10	A20	A40	A50	A70	C10 - C30	C20	E01
All engines	EZK, version Bosch			2.7479PHT	3.7573/23RS				
All engines	EZK							9.4034	4.9138

2.0 -16 CS	Petrol	94	01/89-12/98	ENGINE 5B 6304 GS

Engine	Information	A10	A20	A40	A50	A70	C10 - C30	C20	E01
All engines	EZK, version Bosch			2.7479PHT	3.7573/23RS				
All engines	EZK							9.4034	4.9138

2.0 -16 Turbo	Petrol	118	09/84-08/93	ENGINE B202XL

Engine	Information	A10	A20	A40	A50	A70	C10 - C30	C20	E01
All engines	version Bosch			2.7479PHT					
All engines	distr. num. 75 00 507, version Bosch				3.7555RS				
All engines	distr. num. 75 61 806, 75 61 814, version Bosch				3.7573/23RS				
All engines								9.4004	4.9138

2.0 -16 Turbo	Petrol	120	05/88-08/93	ENGINE B202XL

Engine	Information	A10	A20	A40	A50	A70	C10 - C30	C20	E01
All engines	version Bosch			2.7479PHT					
All engines	distr. num. 75 00 507, version Bosch				3.7555RS				
All engines	distr. num. 75 61 806, 75 61 814, version Bosch				3.7573/23RS				
All engines								9.4004	4.9138

2.0 -16 Turbo	Petrol	129	09/84-12/91	ENGINE B202XL

Engine	Information	A10	A20	A40	A50	A70	C10 - C30	C20	E01
All engines	version Bosch			2.7479PHT					
All engines	distr. num. 75 00 507, version Bosch				3.7555RS				
All engines	distr. num. 75 61 806, 75 61 814, version Bosch				3.7573/23RS				
All engines								9.4004	4.9138

2.0 -16 Turbo CD	Petrol	120	09/88-08/93	ENGINE B202XL

Engine	Information	A10	A20	A40	A50	A70	C10 - C30	C20	E01
All engines	version Bosch			2.7479PHT					
All engines	distr. num. 75 00 507, version Bosch				3.7555RS				
All engines	distr. num. 75 61 806, 75 61 814, version Bosch				3.7573/23RS				
All engines								9.4004	4.9138

2.3 -16 CD	Petrol	107	08/89-12/98	ENGINE B234I

Engine	Information	A10	A20	A40	A50	A70	C10 - C30	C20	E01
All engines	EZK, version Bosch			2.7479PHT	3.7573/23RS				
All engines	EZK							9.4034	4.9138

A10	CONDENSER	A20	CONTACT SET	A40	DISTRIBUTOR CAP	A50	ROTOR	A70	PICK-UP
C10	COIL	C20	IGNITION MODULE	C30	ELECTRONIC IGNITION KIT	E01	IGNITION CABLE SET		

The present application list is a brief version. For the detailed information about the possibility of installation on a specific vehicle, please refer to our web-catalogue http://catalogo.facet.eu/

Vehicle	alim.	kW	Date	Engine	FUNCTIONS ON THE VEHICLE							
					A10	A20	A40	A50	A70	C10 - C30	C20	E01
2.3 -16 CS	Petrol	107	09/89-12/98	ENGINE **B234I**								

Engine	Information	A10	A20	A40	A50	A70	C10 - C30		C20	E01
All engines	EZK, version Bosch			2.7479PHT	3.7573/23RS					
All engines	EZK								9.4034	4.9138

9-3

1.8 i	Petrol	90	01/04-02/15	ENGINE **Z 18 XE**

Engine	Information	A10	A20	A40	A50	A70	C10 - C30		C20	E01
All engines	x 1, x 4, COIL ON PLUG, incl. spark plug connector						9.6408	C10		

2.0 i	Petrol	96	02/98-08/03	ENGINE **B204I**

Engine	Information	A10	A20	A40	A50	A70	C10 - C30		C20	E01
All engines	version Bosch			2.7524PHT	3.7573/21RS					
All engines	x 1, Colour:Yellow, DISTRIBUTOR, 12 Volt, Dia: 55 mm, L: 148, 5 mm, connector type, saw teeth						9.6092	C10		

2.0 SE Turbo	Petrol	147	02/98-08/03	ENGINE **B204R**

Engine	Information	A10	A20	A40	A50	A70	C10 - C30		C20	E01
All engines	fuel formation: motronic, x 1, Colour:Yellow, x 1, Colour:Yellow, DISTRIBUTOR, 12 Volt, DISTRIBUTOR, 12 Volt, Dia: 55 mm, Dia: 55 mm, L: 148, 5 mm, connector type, saw teeth, L: 148, 5 mm, connector type, saw teeth						9.6092	C10		

2.0 Turbo	Petrol	110	03/99-08/03	ENGINE **B204E, B205E**

Engine	Information	A10	A20	A40	A50	A70	C10 - C30		C20	E01
All engines	x 1, Colour:Yellow, DISTRIBUTOR, 12 Volt, Dia: 55 mm, L: 148, 5 mm, connector type, saw teeth						9.6092	C10		

2.0 Turbo	Petrol	113	10/98-08/03	ENGINE **B204E**

Engine	Information	A10	A20	A40	A50	A70	C10 - C30		C20	E01
All engines	x 1, Colour:Yellow, DISTRIBUTOR, 12 Volt, Dia: 55 mm, L: 148, 5 mm, connector type, saw teeth						9.6092	C10		

2.0 Turbo	Petrol	136	02/98-08/03	ENGINE **B204L, B205L**

Engine	Information	A10	A20	A40	A50	A70	C10 - C30		C20	E01
All engines	x 1, Colour:Yellow, DISTRIBUTOR, 12 Volt, Dia: 55 mm, L: 148, 5 mm, connector type, saw teeth						9.6092	C10		

2.0 Turbo	Petrol	151	10/99-08/03	ENGINE **B205R**

Engine	Information	A10	A20	A40	A50	A70	C10 - C30		C20	E01
All engines	x 1, Colour:Yellow, DISTRIBUTOR, 12 Volt, Dia: 55 mm, L: 148, 5 mm, connector type, saw teeth						9.6092	C10		

2.3	Petrol	169	09/99-01/02	ENGINE **B235R**

Engine	Information	A10	A20	A40	A50	A70	C10 - C30		C20	E01
All engines	x 1, Colour:Yellow, DISTRIBUTOR, 12 Volt, Dia: 55 mm, L: 148, 5 mm, connector type, saw teeth						9.6092	C10		

2.3 i	Petrol	110	02/98-08/03	ENGINE **B234I**

Engine	Information	A10	A20	A40	A50	A70	C10 - C30		C20	E01
All engines	version Bosch			2.7524PHT	3.7573/21RS					
All engines	x 1, Colour:Yellow, DISTRIBUTOR, 12 Volt, Dia: 55 mm, L: 148, 5 mm, connector type, saw teeth						9.6092	C10		

9-5

1.6 Turbo	Petrol	132	05/10-01/12	ENGINE **A 16 LET**

Engine	Information	A10	A20	A40	A50	A70	C10 - C30		C20	E01
All engines	x 4, COIL ON PLUG						9.6350	C10		

A10	CONDENSER	**A20**	CONTACT SET	**A40**	DISTRIBUTOR CAP	**A50**	ROTOR	**A70**	PICK-UP
C10	COIL	**C20**	IGNITION MODULE	**C30**	ELECTRONIC IGNITION KIT	**E01**	IGNITION CABLE SET		

The present application list is a brief version. For the detailed information about the possibility of installation on a specific vehicle, please refer to our web-catalogue http://catalogo.facet.eu/

Vehicle	alim.	kW	Date	Engine	FUNCTIONS ON THE VEHICLE							
					A10	A20	A40	A50	A70	C10 - C30	C20	E01

ALHAMBRA I / II

				ENGINE
1.8 T 20V	Petrol	110	10/97-03/10	AJH, AWC

Engine	Information	A10	A20	A40	A50	A70	C10 - C30		C20	E01
Eng. AJH	x 4, COIL ON PLUG						9.6254S	C10		
Eng. AWC	x 4, COIL ON PLUG, incl. spark plug connector						9.6345	C10		
Eng. AJH									9.4076	

				ENGINE
2.0	Petrol	85	03/96-03/10	ADY, ATM

Engine	Information	A10	A20	A40	A50	A70	C10 - C30		C20	E01
Eng. ADY							9.8114	C30		
Eng. ATM							9.8120	C30		

				ENGINE
2.0 i	Petrol	85	04/96-03/10	ADY, ATM

Engine	Information	A10	A20	A40	A50	A70	C10 - C30		C20	E01
Eng. ADY	version Bosch			2.7530/36PHT	3.7573/21RS	8.2723				
Eng. ADY							9.8114	C30		4.9667
Eng. ATM							9.8120	C30		4.9585

				ENGINE
2.8 V6	Petrol	150	06/00-03/10	AUE, AYL

Engine	Information	A10	A20	A40	A50	A70	C10 - C30		C20	E01
All engines	x 6, COIL ON PLUG						9.6335	C10		

				ENGINE
2.8 V6 4motion	Petrol	150	06/00-03/10	AUE, AYL

Engine	Information	A10	A20	A40	A50	A70	C10 - C30		C20	E01
All engines	x 6, COIL ON PLUG						9.6335	C10		

ALHAMBRA III

				ENGINE
1.4 TSI	Petrol	110	06/10->	CAVA, CTHA, CZDA, DJKA

Engine	Information	A10	A20	A40	A50	A70	C10 - C30		C20	E01
Eng. CAVA, CTHA	x 4, COIL ON PLUG, incl. spark plug connector						9.6374	C10		
Eng. CZDA, DJKA	x 4, BERU, ELDOR, COIL ON PLUG, incl. spark plug connector, Number of pins:4, incl. spark plug connector						9.6499	C10		

				ENGINE
1.8 TSI	Petrol	118	11/12->	CDAA

Engine	Information	A10	A20	A40	A50	A70	C10 - C30		C20	E01
All engines	x 4, ELDOR, Housing Colour:Black, COIL ON PLUG, incl. spark plug connector						9.6326	C10		

				ENGINE
2.0 TFSI	Petrol	147	11/10-05/12	CCZA

Engine	Information	A10	A20	A40	A50	A70	C10 - C30		C20	E01
All engines	x 4, ELDOR, Housing Colour:Black, COIL ON PLUG, incl. spark plug connector						9.6326	C10		

				ENGINE
TSi	Petrol	110	05/15->	CZDA

Engine	Information	A10	A20	A40	A50	A70	C10 - C30		C20	E01
All engines	x 4, BERU, ELDOR, COIL ON PLUG, incl. spark plug connector, Number of pins:4, incl. spark plug connector						9.6499	C10		

ALTEA

				ENGINE
1.2 TSI	Petrol	77	04/10->	CBZB

Engine	Information	A10	A20	A40	A50	A70	C10 - C30		C20	E01
All engines							9.8120	C30		4.7248

				ENGINE
1.4 16V	Petrol	63	05/06->	BXW, CGGB

Engine	Information	A10	A20	A40	A50	A70	C10 - C30		C20	E01
All engines	x 4, COIL ON PLUG, incl. spark plug connector						9.6374	C10		

				ENGINE
1.4 TFSi	Petrol	92	05/10-04/11	CAXC

Engine	Information	A10	A20	A40	A50	A70	C10 - C30		C20	E01
All engines	x 4, COIL ON PLUG, incl. spark plug connector						9.6374	C10		

A10	CONDENSER	A20	CONTACT SET	A40	DISTRIBUTOR CAP	A50	ROTOR	A70	PICK-UP
C10	COIL	C20	IGNITION MODULE	C30	ELECTRONIC IGNITION KIT	E01	IGNITION CABLE SET		

The present application list is a brief version. For the detailed information about the possibility of installation on a specific vehicle, please refer to our web-catalogue http://catalogo.facet.eu/

Vehicle	alim.	kW	Date	Engine	FUNCTIONS ON THE VEHICLE A10	A20	A40	A50	A70	C10 - C30	C20	E01
1.4 TSI	Petrol	92	11/07->	CAXC								
Engine: All engines — Information: x 4, COIL ON PLUG, incl. spark plug connector										9.6374 C10		
1.6	Petrol	75	03/04->	BGU, BSE, BSF, CCSA, CMXA								
Engine: Eng. BGU, BSE, BSF, CCSA										9.8120 C30		
Engine: All engines												4.9585
1.6 LPG	Petrol/ Liquified Petro-leum Gas (LPG)	75	09/09->	CHGA								
Engine: All engines										9.8120 C30		4.9585
1.6 Multifuel	Petrol/ Metha-nol	75	11/10-05/11	CMXA								
Engine: All engines										9.8120 C30		
1.8 TFSI	Petrol	118	01/07->	BYT, BZB, CDAA								
Engine: All engines — Information: x 4, ELDOR, Housing Colour:Black, COIL ON PLUG, incl. spark plug connector										9.6326 C10		
2.0 FSI	Petrol	110	05/04-03/09	BLR, BLY, BVY, BVZ								
Engine: All engines — Information: x 4, ELDOR, Housing Colour:Black, COIL ON PLUG, incl. spark plug connector										9.6326 C10		
2.0 TFSI	Petrol	147	04/06-05/09	BWA								
Engine: All engines — Information: x 4, ELDOR, Housing Colour:Black, COIL ON PLUG, incl. spark plug connector										9.6326 C10		
ALTEA XL												
1.2 TSI	Petrol	77	04/10->	CBZB								
Engine: All engines										9.8120 C30		4.7248
1.4 16V	Petrol	63	10/06->	BXW, CGGB								
Engine: All engines — Information: x 4, COIL ON PLUG, incl. spark plug connector										9.6374 C10		
1.4 TSI	Petrol	92	11/07->	CAXC								
Engine: All engines — Information: x 4, COIL ON PLUG, incl. spark plug connector										9.6374 C10		
1.6	Petrol	75	10/06->	BGU, BSE, BSF, CCSA, CMXA								
Engine: Eng. BGU, BSE, BSF, CCSA										9.8120 C30		
Engine: Eng. BSE, BSF, CCSA, CMXA												4.9585
1.6 LPG	Petrol/ Liquified Petro-leum Gas (LPG)	75	09/09->	CHGA								
Engine: All engines										9.8120 C30		4.9585

A10	CONDENSER	A20	CONTACT SET	A40	DISTRIBUTOR CAP	A50	ROTOR	A70	PICK-UP
C10	COIL	C20	IGNITION MODULE	C30	ELECTRONIC IGNITION KIT	E01	IGNITION CABLE SET		

The present application list is a brief version. For the detailed information about the possibility of installation on a specific vehicle, please refer to our web-catalogue http://catalogo.facet.eu/

Vehicle	alim.	kW	Date	Engine	FUNCTIONS ON THE VEHICLE A10	A20	A40	A50	A70	C10 - C30	C20	E01
1.6 Multifuel	Petrol/ Ethanol	75	10/06-11/10	ENGINE: BSE, BSF, CCSA, CMXA								
Engine: All engines	Information:									9.8120 C30		
Engine: Eng. CCSA	Information:											4.9585
1.8 TFSI	Petrol	118	01/07->	ENGINE: BYT, BZB, CDAA								
Engine: All engines	Information: x 4, ELDOR, Housing Colour:Black, COIL ON PLUG, incl. spark plug connector									9.6326 C10		
2.0 FSI	Petrol	110	10/06-03/09	ENGINE: BVY, BVZ								
Engine: All engines	Information: x 4, ELDOR, Housing Colour:Black, COIL ON PLUG, incl. spark plug connector									9.6326 C10		
2.0 TFSI	Petrol	147	10/06-05/09	ENGINE: BWA								
Engine: All engines	Information: x 4, ELDOR, Housing Colour:Black, COIL ON PLUG, incl. spark plug connector									9.6326 C10		
2.0 TFSI	Petrol	155	05/09->	ENGINE: CCZB								
Engine: All engines	Information: x 4, ELDOR, Housing Colour:Black, COIL ON PLUG, incl. spark plug connector									9.6326 C10		
2.0 TFSI 4x4	Petrol	147	06/07-05/09	ENGINE: BWA								
Engine: All engines	Information: x 4, ELDOR, Housing Colour:Black, COIL ON PLUG, incl. spark plug connector									9.6326 C10		
2.0 TFSI 4x4	Petrol	155	05/09->	ENGINE: CCZB								
Engine: All engines	Information: x 4, ELDOR, Housing Colour:Black, COIL ON PLUG, incl. spark plug connector									9.6326 C10		
ARONA												
1.0 TGi	Petrol/ Compressed Natural Gas (CNG)	66	11/18->	ENGINE: DBYA								
Engine: All engines	Information: x 3, BERU, ELDOR, COIL ON PLUG, incl. spark plug connector, Number of pins:4, incl. spark plug connector									9.6499 C10		
1.0 TSI	Petrol	70	07/17->	ENGINE: CHZL, DKLA								
Engine: All engines	Information: x 3, BERU, ELDOR, COIL ON PLUG, incl. spark plug connector, Number of pins:4, incl. spark plug connector									9.6499 C10		
1.0 TSI	Petrol	81	06/20->	ENGINE: DLAA								
Engine: All engines	Information: x 3, ELDOR, HITACHI, COIL ON PLUG, incl. spark plug connector, Number of pins:4, incl. spark plug connector									9.6499 C10		
1.0 TSI	Petrol	85	07/17->	ENGINE: CHZJ, DKJA, DKRF								
Engine: All engines	Information: x 3, BERU, ELDOR, COIL ON PLUG, incl. spark plug connector, Number of pins:4, incl. spark plug connector									9.6499 C10		
1.6 SRE	Petrol	81	07/17->	ENGINE: CWVA								
Engine: All engines	Information: x 4, BERU, ELDOR, COIL ON PLUG, incl. spark plug connector, Number of pins:4, incl. spark plug connector									9.6499 C10		

A10	CONDENSER	A20	CONTACT SET	A40	DISTRIBUTOR CAP	A50	ROTOR	A70	PICK-UP
C10	COIL	C20	IGNITION MODULE	C30	ELECTRONIC IGNITION KIT	E01	IGNITION CABLE SET		

The present application list is a brief version. For the detailed information about the possibility of installation on a specific vehicle, please refer to our web-catalogue http://catalogo.facet.eu/

Vehicle	alim.	kW	Date	Engine	FUNCTIONS ON THE VEHICLE A10	A20	A40	A50	A70	C10 - C30	C20	E01

AROSA

				ENGINE
1.0	Petrol	37	05/97-06/04	AER, ALD, ALL, ANV, AUC

Engine	Information	A10	A20	A40	A50	A70	C10 - C30		C20	E01
Eng. AER, ALL	version Bosch			2.7494PHT	3.7573/21RS	8.2723				
Eng. AER, ALL	version Marelli			2.8216PHT	3.8257RS					
Eng. AER, ALL							9.8114	C30		
Eng. ALD, ANV, AUC							9.8120	C30		
Eng. ALL										4.9569
Eng. ALD, ANV										4.9595
Eng. AUC										4.9601
Eng. AER										4.9641

				ENGINE
1.4	Petrol	44	05/97-06/04	4A 20 NFT, AEX, AKK, AKV, ANW, APQ, AUD

Engine	Information	A10	A20	A40	A50	A70	C10 - C30		C20	E01
Eng. AEX, AKV, APQ	version Bosch			2.7494PHT	3.7573/21RS	8.2723				
Eng. AEX, AKV, APQ	version Marelli			2.8216PHT	3.8257RS					
Eng. AEX, AKV, APQ							9.8114	C30		4.9641
Eng. AKK, ANW, AUD							9.8120	C30		
Eng. 4A 20 NFT										4.9595
Eng. AUD										4.9601

				ENGINE
1.4 16V	Petrol	74	01/00-06/04	0P11C-VF, AFK, AQQ, AUB

Engine	Information	A10	A20	A40	A50	A70	C10 - C30		C20	E01
Eng. AFK, AQQ, AUB							9.8120	C30		
Eng. 0P11C-VF, AQQ, AUB										4.9575

ATECA

				ENGINE
1.0 TSI	Petrol	85	05/16->	CHZJ, DKRF

Engine	Information	A10	A20	A40	A50	A70	C10 - C30		C20	E01
All engines	x 3, BERU, ELDOR, COIL ON PLUG, incl. spark plug connector, Number of pins:4, incl. spark plug connector						9.6499	C10		

				ENGINE
1.4 TSI	Petrol	110	06/16->	CZEA

Engine	Information	A10	A20	A40	A50	A70	C10 - C30		C20	E01
All engines	x 4, BERU, ELDOR, COIL ON PLUG, incl. spark plug connector, Number of pins:4, incl. spark plug connector						9.6499	C10		

				ENGINE
1.4 TSI 4Drive	Petrol	110	06/16->	CZEA

Engine	Information	A10	A20	A40	A50	A70	C10 - C30		C20	E01
All engines	x 4, BERU, ELDOR, COIL ON PLUG, incl. spark plug connector, Number of pins:4, incl. spark plug connector						9.6499	C10		

CORDOBA I

				ENGINE
1.0 16V	Petrol	51	05/00-10/02	AST, AVZ

Engine	Information	A10	A20	A40	A50	A70	C10 - C30		C20	E01
All engines	without cover, version Bosch			2.7494PHT						
All engines	with cover, version Bosch			2.7530/36PHT						
All engines	version Bosch				3.7573/21RS	8.2733				
All engines							9.8114	C30		

				ENGINE
1.0 CL	Petrol	33	02/93-06/96	AAU

Engine	Information	A10	A20	A40	A50	A70	C10 - C30		C20	E01
All engines	version Bosch			2.7530/36PHT	3.7573/21RS					
All engines							9.8114	C30		

				ENGINE
1.0 i	Petrol	37	09/96-10/02	AER

Engine	Information	A10	A20	A40	A50	A70	C10 - C30		C20	E01
All engines	version Bosch			2.7494PHT	3.7573/21RS	8.2723				
All engines	version Marelli			2.8216PHT	3.8257RS	8.4982				
All engines							9.8114	C30		4.9640

A10	CONDENSER	A20	CONTACT SET	A40	DISTRIBUTOR CAP	A50	ROTOR	A70	PICK-UP
C10	COIL	C20	IGNITION MODULE	C30	ELECTRONIC IGNITION KIT	E01	IGNITION CABLE SET		

The present application list is a brief version. For the detailed information about the possibility of installation on a specific vehicle, please refer to our web-catalogue http://catalogo.facet.eu/

Vehicle	alim.	kW	Date	Engine	FUNCTIONS ON THE VEHICLE							
					A10	A20	A40	A50	A70	C10 - C30	C20	E01
1.3	Petrol	40	02/93-08/94	ENGINE 8C20HD0D, AAV								
Eng. AAV	version Bosch						2.7530/36PHT	3.7573/21RS				
Eng. AAV										9.8114 C30		
Eng. 8C20HD0D										9.8116 C30		
1.4	Petrol	40	12/97-04/99	ENGINE ANX								
All engines	version Bosch						2.7494PHT	3.7573/21RS	8.2723			
All engines	version Marelli						2.8216PHT	3.8257RS	8.4982			
All engines										9.8114 C30		4.9640
1.4 16V	Petrol	55	06/99-12/02	ENGINE 2CJXE, AUA								
All engines										9.8120 C30		4.9575
1.4 i	Petrol	44	06/94-12/02	ENGINE ABD, AEX, AKV, APQ								
All engines	version Bosch						2.7494PHT	3.7573/21RS				
Eng. AKV, APQ	version Marelli						2.8216PHT	3.8257RS	8.4982			
Eng. AEX, AKV, APQ	version Bosch								8.2723			
All engines										9.8114 C30		
Eng. ABD												4.9364
Eng. AEX, AKV, APQ												4.9640
1.4 i 16V	Petrol	74	09/96-10/02	ENGINE AFH								
All engines	version Bosch						2.7494PHT	3.7573/21RS	8.2723			
All engines	version Marelli						2.8216PHT	3.8257RS	8.4982			
All engines										9.8114 C30		
1.6 i	Petrol	55	02/93-12/02	ENGINE 1F, ABU, AEE, ALM								
Eng. ALM	version Bosch						2.7479PHT					
Eng. 1F, ABU, AEE	version Bosch						2.7494PHT					
Eng. 1F	version Ducellier						2.7668PHT	3.7699RS				
Eng. AEE, ALM	version Marelli						2.8216PHT	3.8257RS	8.4982			
All engines	version Bosch							3.7573/21RS				
Eng. 1F, AEE, ALM	version Bosch								8.2723			
All engines										9.8114 C30		
Eng. ABU	->ch. 6K-ZR010 000, ->ch. 6K-ZR510 000											4.8736
Eng. 1F												4.8965
Eng. ABU	ch. 6K-ZR010 000 ->, ch. 6K-ZR510 000 ->											4.9364
Eng. AEE, ALM												4.9640
1.6 i	Petrol	74	07/96-12/02	ENGINE AFT, AKL								
Eng. AFT	version Bosch						2.7494PHT	3.7573/21RS	8.2723			
Eng. AFT										9.8114 C30		4.9932
Eng. AKL										9.8120 C30		4.9484
1.8 i	Petrol	66	02/93-09/02	ENGINE ABS, ACC, ADZ								
All engines	version Bosch						2.7494PHT	3.7573/21RS	8.2723			
All engines	version Ducellier						2.7668PHT	3.7699RS				
All engines										9.8114 C30		
All engines	01/07/96 ->											4.8965
Eng. ACC	->year 30/06/96											4.9549

A10	CONDENSER	A20	CONTACT SET	A40	DISTRIBUTOR CAP	A50	ROTOR	A70	PICK-UP
C10	COIL	C20	IGNITION MODULE	C30	ELECTRONIC IGNITION KIT	E01	IGNITION CABLE SET		

The present application list is a brief version. For the detailed information about the possibility of installation on a specific vehicle, please refer to our web-catalogue http://catalogo.facet.eu/

Vehicle	alim.	kW	Date	Engine	FUNCTIONS ON THE VEHICLE							
					A10	A20	A40	A50	A70	C10 - C30	C20	E01
1.8 i 16V	Petrol	95	10/93-08/96	**148 D**								
All engines	version Bosch						2.7494PHT	3.7573/21RS	8.2723			
All engines										9.8114 C30		
1.8 T 20V Cupra	Petrol	115	07/00-10/02	**AQX**								
All engines	Qty: 4									9.6345 C10		
2.0 i	Petrol	85	02/93-06/99	**2E, AGG**								
Eng. 2E	version Bosch						2.7494PHT					
Eng. AGG	version Bosch						2.7530/36PHT		8.2723			
All engines	version Bosch							3.7573/21RS				
All engines	ch. 6K-ZR132 109 ->, ch. 6K-ZR672 417 ->									9.8114 C30		
All engines												4.8965
2.0 i 16V	Petrol	110	08/96-06/99	**ABF**								
All engines	version Bosch						2.7530/33PHT	3.7573/21RS				
All engines										9.8114 C30		
CORDOBA II												
1.2	Petrol	47	10/02-06/06	**AZQ, BME**								
All engines	x 3, COIL ON PLUG, incl. spark plug connector									9.6374 C10		
1.2 12V	Petrol	51	05/06-11/09	**BXV**								
All engines	x 3, COIL ON PLUG, incl. spark plug connector									9.6374 C10		
1.4 16V	Petrol	55	09/02-12/07	**BBY, BKY**								
All engines	x 4, COIL ON PLUG, incl. spark plug connector									9.6374 C10		
1.4 16V	Petrol	59	05/06->	**BUD**								
All engines	Qty: 4									9.6374 C10		
1.4 16V	Petrol	63	05/06-11/09	**BXW**								
All engines	x 4, COIL ON PLUG, incl. spark plug connector									9.6374 C10		
1.4 16V	Petrol	74	10/02-11/09	**BBZ**								
All engines	x 4, COIL ON PLUG, incl. spark plug connector									9.6374 C10		
1.6	Petrol	74	04/03-11/09	**BAH**								
All engines										9.8120 C30		4.9723
1.6 16V	Petrol	77	11/06-11/09	**BTS**								
All engines	x 4, COIL ON PLUG, incl. spark plug connector									9.6374 C10		
2.0	Petrol	85	09/02-11/09	**AZL, BBX**								
All engines										9.8120 C30		4.9585

A10	CONDENSER	**A20**	CONTACT SET	**A40**	DISTRIBUTOR CAP	**A50**	ROTOR	**A70**	PICK-UP
C10	COIL	**C20**	IGNITION MODULE	**C30**	ELECTRONIC IGNITION KIT	**E01**	IGNITION CABLE SET		

The present application list is a brief version. For the detailed information about the possibility of installation on a specific vehicle, please refer to our web-catalogue http://catalogo.facet.eu/

Vehicle	alim.	kW	Date	Engine	FUNCTIONS ON THE VEHICLE							
					A10	A20	A40	A50	A70	C10 - C30	C20	E01

EXEO

				ENGINE
1.6	Petrol	75	03/09-09/10	ALZ

Engine	Information	A10	A20	A40	A50	A70	C10 - C30		C20	E01
All engines	x 4, COIL ON PLUG, incl. spark plug connector						9.6329	C10		
All engines							9.8120	C30		4.9585

				ENGINE
1.8 T	Petrol	110	12/08-05/10	CFMA

Engine	Information	A10	A20	A40	A50	A70	C10 - C30		C20	E01
All engines	x 4, COIL ON PLUG, incl. spark plug connector						9.6329	C10		
All engines							9.8120	C30		

				ENGINE
1.8 TSI	Petrol	118	05/10-05/13	CDHB

Engine	Information	A10	A20	A40	A50	A70	C10 - C30		C20	E01
All engines	x 4, ELDOR, Housing Colour:Black, COIL ON PLUG, incl. spark plug connector						9.6326	C10		

				ENGINE
1.8 TSI	Petrol	88	09/10-05/13	CDHA

Engine	Information	A10	A20	A40	A50	A70	C10 - C30		C20	E01
All engines	x 4, ELDOR, Housing Colour:Black, COIL ON PLUG, incl. spark plug connector						9.6326	C10		

				ENGINE
2.0 TFSI	Petrol	147	03/09-05/13	BWE

Engine	Information	A10	A20	A40	A50	A70	C10 - C30		C20	E01
All engines	x 4, ELDOR, Housing Colour:Black, COIL ON PLUG, incl. spark plug connector						9.6326	C10		

				ENGINE
2.0 TFSI	Petrol	155	05/10-05/13	CDND

Engine	Information	A10	A20	A40	A50	A70	C10 - C30		C20	E01
All engines	x 4, ELDOR, Housing Colour:Black, COIL ON PLUG, incl. spark plug connector						9.6326	C10		

FURA

				ENGINE
0.9	Petrol	33	01/82-06/86	100 GL 3000

Engine	Information	A10	A20	A40	A50	A70	C10 - C30		C20	E01
All engines	version Ducellier	0.0339		2.7658PHT	3.7683RS					
All engines	version Marelli	0.0617	1.4942		3.8242RS					
All engines	version Femsa		1.3720	2.7716	3.7752RS					
All engines							9.6001D	C10		

IBIZA

				ENGINE
1.0 SRE	Petrol	55	05/15-12/16	CHYB

Engine	Information	A10	A20	A40	A50	A70	C10 - C30		C20	E01
All engines	x 3, BERU, ELDOR, COIL ON PLUG, incl. spark plug connector, Number of pins:4, incl. spark plug connector						9.6499	C10		

				ENGINE
1.2	Petrol	44	07/09-05/15	CGPB

Engine	Information	A10	A20	A40	A50	A70	C10 - C30		C20	E01
All engines	x 3, COIL ON PLUG, incl. spark plug connector						9.6374	C10		

				ENGINE
1.2	Petrol	51	04/08-05/15	BZG, CGPA

Engine	Information	A10	A20	A40	A50	A70	C10 - C30		C20	E01
All engines	x 3, COIL ON PLUG, incl. spark plug connector						9.6374	C10		

				ENGINE
1.4	Petrol	63	07/08-05/15	BXW, CGGB

Engine	Information	A10	A20	A40	A50	A70	C10 - C30		C20	E01
All engines	x 4, COIL ON PLUG, incl. spark plug connector						9.6374	C10		

				ENGINE
1.6	Petrol	77	07/08-05/15	BTS

Engine	Information	A10	A20	A40	A50	A70	C10 - C30		C20	E01
All engines	x 4, COIL ON PLUG, incl. spark plug connector						9.6374	C10		

A10	CONDENSER	A20	CONTACT SET	A40	DISTRIBUTOR CAP	A50	ROTOR	A70	PICK-UP
C10	COIL	C20	IGNITION MODULE	C30	ELECTRONIC IGNITION KIT	E01	IGNITION CABLE SET		

The present application list is a brief version. For the detailed information about the possibility of installation on a specific vehicle, please refer to our web-catalogue http://catalogo.facet.eu/

Vehicle	alim.	kW	Date	Engine	FUNCTIONS ON THE VEHICLE A10	A20	A40	A50	A70	C10 - C30	C20	E01
1.6 SRE	Petrol	81	07/15-12/16	CWVA								

Engine	Information	A10	A20	A40	A50	A70	C10 - C30		C20	E01
All engines	x 4, BERU, ELDOR, COIL ON PLUG, incl. spark plug connector, Number of pins:4, incl. spark plug connector						9.6499	C10		

IBIZA I

0.9	Petrol	29	08/90-05/93	09 NCA, 146 A 000

Engine	Information	A10	A20	A40	A50	A70	C10 - C30		C20	E01
Eng. 146 A 000	version Ducellier	0.0339		2.7658PHT	3.7691					
Eng. 146 A 000	version Marelli	0.0628	1.4946M	2.8198PHT	3.8247RS					
Eng. 146 A 000	version Femsa		1.4932	2.7714	3.7752RS					
Eng. 09 NCA	version MARELLI			2.8176						
All engines					3.8237					
Eng. 146 A 000							9.6001D	C10		

0.9	Petrol	32	08/86-05/93	146 A 000

Engine	Information	A10	A20	A40	A50	A70	C10 - C30		C20	E01
All engines	version Ducellier	0.0339		2.7658PHT	3.7691					
All engines	version Marelli	0.0628	1.4946M	2.8198PHT	3.8247RS					
All engines	version Femsa		1.4932	2.7714	3.7752RS					
All engines							9.6001D	C10		

1.2	Petrol	46	11/84-12/93	021 A 1000

Engine	Information	A10	A20	A40	A50	A70	C10 - C30		C20	E01
All engines	version Bosch			2.7479PHT	3.7556RS	8.2693				
All engines	version Marelli			2.8201PHT	3.8247RS					
All engines										4.8612

1.2 i	Petrol	52	01/89-05/93	021 C.1000

Engine	Information	A10	A20	A40	A50	A70	C10 - C30		C20	E01
All engines	version Bosch			2.7479PHT	3.7573/21RS					
All engines										4.8612

1.5 i	Petrol	74	10/86-05/93	021 B.2000

Engine	Information	A10	A20	A40	A50	A70	C10 - C30		C20	E01
All engines	version Bosch			2.7479PHT	3.7573/21RS					
All engines										4.8612

IBIZA II

1.0	Petrol	33	03/93-09/96	AAU

Engine	Information	A10	A20	A40	A50	A70	C10 - C30		C20	E01
All engines	version Bosch			2.7494PHT	3.7573/21RS					
All engines							9.8114	C30		4.8725

1.0 16V	Petrol	51	10/99-02/02	AST, AVZ

Engine	Information	A10	A20	A40	A50	A70	C10 - C30		C20	E01
All engines				2.7530/36PHT			9.8114	C30		
All engines	version Bosch				3.7573/21RS	8.2733				

1.0 i	Petrol	37	09/96-02/02	AER, AUC

Engine	Information	A10	A20	A40	A50	A70	C10 - C30		C20	E01
Eng. AER	version Bosch			2.7494PHT	3.7573/21RS	8.2723				
Eng. AER	version Marelli			2.8216PHT	3.8257RS					
Eng. AER							9.8114	C30		4.9640
Eng. AUC							9.8120	C30		4.9601

1.3 i	Petrol	40	03/93-08/99	8C20HD0D, AAV

Engine	Information	A10	A20	A40	A50	A70	C10 - C30		C20	E01
Eng. AAV	version Bosch			2.7494PHT	3.7573/21RS					
Eng. 8C20HD0D	version Bosch			2.7530/36PHT	3.7556RS	8.2734				
Eng. AAV							9.8114	C30		4.8725
Eng. 8C20HD0D							9.8116	C30		

A10	CONDENSER	A20	CONTACT SET	A40	DISTRIBUTOR CAP	A50	ROTOR	A70	PICK-UP
C10	COIL	C20	IGNITION MODULE	C30	ELECTRONIC IGNITION KIT	E01	IGNITION CABLE SET		

The present application list is a brief version. For the detailed information about the possibility of installation on a specific vehicle, please refer to our web-catalogue http://catalogo.facet.eu/

Vehicle	alim.	kW	Date	Engine	FUNCTIONS ON THE VEHICLE A10	A20	A40	A50	A70	C10 - C30	C20	E01
1.4	Petrol	40	12/97-04/99	ENGINE ANX								

Engine	Information	A10	A20	A40	A50	A70	C10 - C30	C20	E01
All engines	version Bosch			2.7494PHT	3.7573/21RS	8.2723			
All engines	version Marelli			2.8216PHT	3.8257RS				
All engines									4.9640

1.4 16V	Petrol	55	05/00-02/02	ENGINE 2CJXE, AUA

Engine	Information	A10	A20	A40	A50	A70	C10 - C30	C20	E01
All engines							9.8120 C30		4.9575

1.4 i	Petrol	44	09/93-02/02	ENGINE ABD, AEX, AKV, APQ, AUD

Engine	Information	A10	A20	A40	A50	A70	C10 - C30	C20	E01
Eng. ABD, AEX, AKV, APQ	version Bosch			2.7494PHT	3.7573/21RS	8.2723			
Eng. ABD, AEX, AKV, APQ	version Marelli			2.8216PHT					
Eng. ABD, AEX, AKV, APQ	version Marelli, version Marelli				3.8257RS				
Eng. ABD, AEX							9.8114 C30		
Eng. AUD							9.8120 C30		4.9601
Eng. ABD									4.9364
Eng. AEX, AKV, APQ									4.9640

1.4 i 16V	Petrol	74	06/97-02/02	ENGINE AFH, AQQ

Engine	Information	A10	A20	A40	A50	A70	C10 - C30	C20	E01
Eng. AFH	version Bosch			2.7494PHT	3.7573/21RS	8.2723			
Eng. AFH	version Marelli			2.8216PHT	3.8257RS				
Eng. AFH							9.8114 C30		
Eng. AQQ							9.8120 C30		4.9575

1.6 i	Petrol	55	03/93-02/02	ENGINE 1F, ABU, AEE, ALM

Engine	Information	A10	A20	A40	A50	A70	C10 - C30	C20	E01
All engines	version Bosch			2.7494PHT	3.7573/21RS				
Eng. 1F	version Ducellier			2.7668PHT	3.7699RS				
Eng. AEE, ALM	version Marelli, version Marelli			2.8216PHT	3.8257RS				
Eng. 1F, AEE, ALM	version Bosch					8.2723			
All engines							9.8114 C30		
Eng. 1F									4.8965
Eng. ABU	ch. 6K-ZR010 000 ->, ch. 6K-ZR510 000 ->								4.9364
Eng. AEE, ALM									4.9640

1.6 i	Petrol	74	04/96-02/02	ENGINE AFT, AKL

Engine	Information	A10	A20	A40	A50	A70	C10 - C30	C20	E01
Eng. AFT	version Bosch			2.7494PHT	3.7573/21RS	8.2723			
Eng. AFT							9.8114 C30		4.9932
Eng. AKL							9.8120 C30		4.9484

1.8 i	Petrol	66	03/93-08/99	ENGINE ABS, ACC, ADZ

Engine	Information	A10	A20	A40	A50	A70	C10 - C30	C20	E01
All engines	version Bosch			2.7494PHT	3.7573/21RS				
All engines	version Ducellier			2.7668PHT	3.7699RS				
Eng. ABS, ADZ	version Bosch					8.2723			
Eng. ADZ							9.6059 C10		
All engines							9.8114 C30		4.8965

1.8 i 16V	Petrol	95	11/93-08/96	ENGINE 148 D

Engine	Information	A10	A20	A40	A50	A70	C10 - C30	C20	E01
All engines	version Bosch			2.7494PHT	3.7573/21RS	8.2723			
All engines							9.8114 C30		

1.8 T 20V Cupra	Petrol	115	07/00-02/02	ENGINE AQX, AYP

Engine	Information	A10	A20	A40	A50	A70	C10 - C30	C20	E01
Eng. AYP	Qty: 4						9.6329 C10		
Eng. AQX	Qty: 4						9.6345 C10		

A10	CONDENSER	A20	CONTACT SET	A40	DISTRIBUTOR CAP	A50	ROTOR	A70	PICK-UP
C10	COIL	C20	IGNITION MODULE	C30	ELECTRONIC IGNITION KIT	E01	IGNITION CABLE SET		

The present application list is a brief version. For the detailed information about the possibility of installation on a specific vehicle, please refer to our web-catalogue http://catalogo.facet.eu/

Vehicle	alim.	kW	Date	Engine	FUNCTIONS ON THE VEHICLE							
					A10	A20	A40	A50	A70	C10 - C30	C20	E01
2.0 i	Petrol	85	03/93-08/99	**2E, AGG**								
All engines	version Bosch						2.7494PHT	3.7573/21RS				
Eng. AGG	version Bosch								8.2723			
Eng. 2E	->ch. 6K-ZR132 108, ->ch. 6K-ZR672 416									9.6059 C10		
All engines	ch. 6K-ZR132 109 ->, ch. 6K-ZR672 417 ->									9.8114 C30		
All engines												4.8965
2.0 i 16V	Petrol	110	08/96-08/99	**ABF**								
All engines	version Bosch						2.7530/33PHT	3.7573/21RS				
All engines										9.8114 C30		
IBIZA III												
1.2	Petrol	44	06/07-05/08	**BBM**								
All engines	x 3, COIL ON PLUG, incl. spark plug connector									9.6331 C10		
1.2	Petrol	47	02/02-06/06	**AZQ, BME**								
All engines	x 3, COIL ON PLUG, incl. spark plug connector									9.6374 C10		
1.2 12V	Petrol	51	05/06-11/09	**BXV**								
All engines	x 3, COIL ON PLUG, incl. spark plug connector									9.6374 C10		
1.4 16V	Petrol	55	02/02-12/07	**BBY, BKY**								
All engines	x 4, COIL ON PLUG, incl. spark plug connector									9.6374 C10		
1.4 16V	Petrol	63	05/06-11/09	**BXW**								
All engines	x 4, COIL ON PLUG, incl. spark plug connector									9.6374 C10		
1.4 16V	Petrol	74	02/02-11/09	**AUB, BBZ**								
All engines	ch. 6L2012770 ->, x 4, COIL ON PLUG, incl. spark plug connector									9.6374 C10		
Eng. AUB										9.8120 C30		4.9575
1.6	Petrol	74	02/03-11/09	**BAH**								
All engines										9.8120 C30		4.9723
1.6 16V	Petrol	77	11/06-11/09	**BTS**								
All engines	x 4, COIL ON PLUG, incl. spark plug connector									9.6374 C10		
1.8 T Cupra R	Petrol	132	01/04-02/08	**BBU, BLZ**								
All engines	x 4, COIL ON PLUG, incl. spark plug connector									9.6329 C10		
1.8 T FR	Petrol	110	12/03-05/08	**BJX, BKV**								
All engines	x 4, COIL ON PLUG, incl. spark plug connector									9.6329 C10		
2.0	Petrol	85	04/02-11/09	**AZL, BBX**								
All engines										9.8120 C30		4.9585

A10	CONDENSER	**A20**	CONTACT SET	**A40**	DISTRIBUTOR CAP	**A50**	ROTOR	**A70**	PICK-UP
C10	COIL	**C20**	IGNITION MODULE	**C30**	ELECTRONIC IGNITION KIT	**E01**	IGNITION CABLE SET		

The present application list is a brief version. For the detailed information about the possibility of installation on a specific vehicle, please refer to our web-catalogue http://catalogo.facet.eu/

Vehicle	alim.	kW	Date	Engine	FUNCTIONS ON THE VEHICLE A10	A20	A40	A50	A70	C10 - C30	C20	E01

IBIZA IV

				ENGINE
1.0	Petrol	55	05/15-06/17	CHYB

Engine	Information	A10	A20	A40	A50	A70	C10 - C30		C20	E01
All engines	x 3, BERU, ELDOR, COIL ON PLUG, incl. spark plug connector, Number of pins:4, incl. spark plug connector						9.6499	C10		

				ENGINE
1.0 TSI	Petrol	70	05/15-06/17	CHZB

Engine	Information	A10	A20	A40	A50	A70	C10 - C30		C20	E01
All engines	x 3, BERU, ELDOR, COIL ON PLUG, incl. spark plug connector, Number of pins:4, incl. spark plug connector						9.6499	C10		

				ENGINE
1.0 TSI	Petrol	81	05/15-06/17	CHZC

Engine	Information	A10	A20	A40	A50	A70	C10 - C30		C20	E01
All engines	x 3, BERU, ELDOR, COIL ON PLUG, incl. spark plug connector, Number of pins:4, incl. spark plug connector						9.6499	C10		

				ENGINE
1.2	Petrol	44	07/09-05/15	CGPB

Engine	Information	A10	A20	A40	A50	A70	C10 - C30		C20	E01
All engines	x 3, COIL ON PLUG, incl. spark plug connector						9.6374	C10		

				ENGINE
1.2	Petrol	51	03/08-05/15	BZG, CGPA, CJLB

Engine	Information	A10	A20	A40	A50	A70	C10 - C30		C20	E01
All engines	x 3, COIL ON PLUG, incl. spark plug connector						9.6374	C10		

				ENGINE
1.2 LPG	Petrol/ Liquified Petroleum Gas (LPG)	51	03/08-05/11	BZG

Engine	Information	A10	A20	A40	A50	A70	C10 - C30		C20	E01
All engines	x 3, COIL ON PLUG, incl. spark plug connector						9.6374	C10		

				ENGINE
1.2 TSI	Petrol	63	08/12-05/15	CBZA

Engine	Information	A10	A20	A40	A50	A70	C10 - C30		C20	E01
All engines							9.8120	C30		4.7248

				ENGINE
1.2 TSI	Petrol	66	05/15-06/17	CJZC

Engine	Information	A10	A20	A40	A50	A70	C10 - C30		C20	E01
All engines	x 4, BERU, ELDOR, COIL ON PLUG, incl. spark plug connector, Number of pins:4, incl. spark plug connector						9.6499	C10		

				ENGINE
1.2 TSI	Petrol	77	09/10-05/15	CBZB

Engine	Information	A10	A20	A40	A50	A70	C10 - C30		C20	E01
All engines							9.8120	C30		4.7248

				ENGINE
1.2 TSI	Petrol	81	09/15-06/17	CJZD

Engine	Information	A10	A20	A40	A50	A70	C10 - C30		C20	E01
All engines	x 4, BERU, ELDOR, COIL ON PLUG, incl. spark plug connector, Number of pins:4, incl. spark plug connector						9.6499	C10		

				ENGINE
1.4	Petrol	63	03/08-05/15	BXW, CGGB

Engine	Information	A10	A20	A40	A50	A70	C10 - C30		C20	E01
All engines	x 4, COIL ON PLUG, incl. spark plug connector						9.6374	C10		

				ENGINE
1.4 LPG	Petrol/ Liquified Petroleum Gas (LPG)	63	03/08-05/11	BXW

Engine	Information	A10	A20	A40	A50	A70	C10 - C30		C20	E01
All engines	x 4, COIL ON PLUG, incl. spark plug connector						9.6374	C10		

				ENGINE
1.4 TSI	Petrol	103	10/13-05/15	CPTA

Engine	Information	A10	A20	A40	A50	A70	C10 - C30		C20	E01
All engines	x 4, BERU, ELDOR, COIL ON PLUG, incl. spark plug connector, Number of pins:4, incl. spark plug connector						9.6499	C10		

A10	CONDENSER	A20	CONTACT SET	A40	DISTRIBUTOR CAP	A50	ROTOR	A70	PICK-UP
C10	COIL	C20	IGNITION MODULE	C30	ELECTRONIC IGNITION KIT	E01	IGNITION CABLE SET		

The present application list is a brief version. For the detailed information about the possibility of installation on a specific vehicle, please refer to our web-catalogue http://catalogo.facet.eu/

Vehicle	alim.	kW	Date	Engine	FUNCTIONS ON THE VEHICLE A10	A20	A40	A50	A70	C10 - C30	C20	E01
1.4 TSI	Petrol	110	01/09-06/17	**CAVF, CNUB, CTHF, CTJB, CZEA**								

Engine	Information	A10	A20	A40	A50	A70	C10 - C30		C20	E01
Eng. CAVF, CNUB, CTHF, CTJB	x 4, COIL ON PLUG, incl. spark plug connector						9.6374	C10		
Eng. CZEA	x 4, BERU, ELDOR, COIL ON PLUG, incl. spark plug connector, Number of pins:4, incl. spark plug connector						9.6499	C10		

1.4 TSI Cupra	Petrol	132	06/09-05/15	CAVE, CTHE, CTJC

Engine	Information	A10	A20	A40	A50	A70	C10 - C30		C20	E01
All engines	x 4, COIL ON PLUG, incl. spark plug connector						9.6374	C10		

1.6	Petrol	77	05/08-05/15	BTS

Engine	Information	A10	A20	A40	A50	A70	C10 - C30		C20	E01
All engines	x 4, COIL ON PLUG, incl. spark plug connector						9.6374	C10		

1.6	Petrol	81	07/15-06/17	CWVA

Engine	Information	A10	A20	A40	A50	A70	C10 - C30		C20	E01
All engines	x 4, BERU, ELDOR, COIL ON PLUG, incl. spark plug connector, Number of pins:4, incl. spark plug connector						9.6499	C10		

1.6 LPG	Petrol/ Liquified Petroleum Gas (LPG)	60	05/11-05/15	CNKA

Engine	Information	A10	A20	A40	A50	A70	C10 - C30		C20	E01
All engines	x 4, COIL ON PLUG, incl. spark plug connector						9.6374	C10		

1.6 SRE	Petrol	66	07/15->	CWVB

Engine	Information	A10	A20	A40	A50	A70	C10 - C30		C20	E01
All engines	Qty: 4						9.6499	C10		

1.6 SRE	Petrol	81	07/15->	CWVA

Engine	Information	A10	A20	A40	A50	A70	C10 - C30		C20	E01
All engines	Qty: 4						9.6499	C10		

1.8 TSI Cupra	Petrol	141	11/15-12/16	DAJA

Engine	Information	A10	A20	A40	A50	A70	C10 - C30		C20	E01
All engines	x 4, BERU, ELDOR, COIL ON PLUG, incl. spark plug connector, Number of pins:4, incl. spark plug connector						9.6499	C10		

2.0	Petrol	85	10/08-05/15	CEKA

Engine	Information	A10	A20	A40	A50	A70	C10 - C30		C20	E01
All engines							9.8120	C30		4.9585

IBIZA V

1.0	Petrol	48	07/17->	CHYC

Engine	Information	A10	A20	A40	A50	A70	C10 - C30		C20	E01
All engines	x 3, BERU, x 3, COIL ON PLUG, ELDOR, COIL ON PLUG, incl. spark plug connector, incl. spark plug connector, Number of pins:4, incl. spark plug connector						9.6499	C10		

1.0	Petrol	55	01/17->	CHYB

Engine	Information	A10	A20	A40	A50	A70	C10 - C30		C20	E01
All engines	x 3, BERU, x 3, COIL ON PLUG, ELDOR, COIL ON PLUG, incl. spark plug connector, incl. spark plug connector, Number of pins:4, incl. spark plug connector						9.6499	C10		

1.0 TGI	Petrol/ Compressed Natural Gas (CNG)	66	11/17->	DBYA

Engine	Information	A10	A20	A40	A50	A70	C10 - C30		C20	E01
All engines	x 3, BERU, x 3, COIL ON PLUG, ELDOR, COIL ON PLUG, incl. spark plug connector, incl. spark plug connector, Number of pins:4, incl. spark plug connector						9.6499	C10		

A10	CONDENSER	**A20**	CONTACT SET	**A40**	DISTRIBUTOR CAP	**A50**	ROTOR	**A70**	PICK-UP
C10	COIL	**C20**	IGNITION MODULE	**C30**	ELECTRONIC IGNITION KIT	**E01**	IGNITION CABLE SET		

The present application list is a brief version. For the detailed information about the possibility of installation on a specific vehicle, please refer to our web-catalogue http://catalogo.facet.eu/

Vehicle	alim.	kW	Date	Engine	FUNCTIONS ON THE VEHICLE: A10	A20	A40	A50	A70	C10 - C30	C20	E01
1.0 TSI	Petrol	70	01/17->	CHZL, DKLA, DLAC						9.6499 C10		
1.0 TSI	Petrol	81	06/20->	DLAA						9.6499 C10		
1.0 TSI	Petrol	85	01/17->	CHZJ, DKJA, DKRF						9.6499 C10		
1.6	Petrol	81	05/17->	CWVA						9.6499 C10		

Engine	Information	A10	A20	A40	A50	A70	C10 - C30	C20	E01
All engines	x 3, BERU, x 3, COIL ON PLUG, ELDOR, COIL ON PLUG, incl. spark plug connector, incl. spark plug connector, Number of pins:4, incl. spark plug connector						9.6499 C10		

Engine	Information	A10	A20	A40	A50	A70	C10 - C30	C20	E01
All engines	x 3, HITACHI, x 3, COIL ON PLUG, ELDOR, COIL ON PLUG, incl. spark plug connector, incl. spark plug connector, Number of pins:4, incl. spark plug connector						9.6499 C10		

Engine	Information	A10	A20	A40	A50	A70	C10 - C30	C20	E01
All engines	x 3, BERU, x 3, COIL ON PLUG, ELDOR, COIL ON PLUG, incl. spark plug connector, incl. spark plug connector, Number of pins:4, incl. spark plug connector						9.6499 C10		

Engine	Information	A10	A20	A40	A50	A70	C10 - C30	C20	E01
All engines	x 4, BERU, x 4, COIL ON PLUG, ELDOR, COIL ON PLUG, incl. spark plug connector, incl. spark plug connector, Number of pins:4, incl. spark plug connector						9.6499 C10		

INCA

Vehicle	alim.	kW	Date	Engine
1.4 16V	Petrol	55	04/00-06/03	AUA
1.4 i	Petrol	44	11/95-06/03	AEX, AKV, APQ, AUD
1.6 i	Petrol	55	11/95-09/00	1F, AEE

Engine	Information	A10	A20	A40	A50	A70	C10 - C30	C20	E01
All engines							9.8120 C30		4.9575

Engine	Information	A10	A20	A40	A50	A70	C10 - C30	C20	E01
Eng. AEX, AKV, APQ	version Bosch, without cover			2.7494PHT					
Eng. AEX, AKV, APQ	version Bosch, with cover			2.7530/36PHT					
Eng. AEX, AKV, APQ	version Ducellier			2.7668PHT	3.7699RS				
Eng. AEX, AKV, APQ	version Marelli			2.8216PHT	3.8257RS				
Eng. AEX, AKV, APQ	version Bosch				3.7573/21RS	8.2723			
Eng. AEX, AKV, APQ							9.8114 C30		4.9660
Eng. AUD							9.8120 C30		4.9601

Engine	Information	A10	A20	A40	A50	A70	C10 - C30	C20	E01
All engines	version Bosch, without cover			2.7494PHT					
All engines	version Bosch, with cover			2.7530/36PHT					
All engines	version Ducellier			2.7668PHT	3.7699RS				
All engines	version Marelli			2.8216PHT	3.8257RS				
All engines	version Bosch				3.7573/21RS	8.2723			
All engines							9.8114 C30		
Eng. 1F									4.8965
Eng. AEE									4.9660

LEON I

Vehicle	alim.	kW	Date	Engine
1.4 16V	Petrol	55	11/99-06/06	2CJXE, AHW, AXP, BCA
1.6	Petrol	74	11/99-06/06	AEH, AKL
1.6	Petrol	75	10/05-06/06	BFQ

Engine	Information	A10	A20	A40	A50	A70	C10 - C30	C20	E01
Eng. BCA	x 4, COIL ON PLUG, incl. spark plug connector						9.6374 C10		
Eng. 2CJXE, AHW, AXP							9.8120 C30		4.9575

Engine	Information	A10	A20	A40	A50	A70	C10 - C30	C20	E01
All engines							9.8120 C30		4.9484

Engine	Information	A10	A20	A40	A50	A70	C10 - C30	C20	E01
All engines							9.8120 C30		4.9585

A10	CONDENSER	A20	CONTACT SET	A40	DISTRIBUTOR CAP	A50	ROTOR	A70	PICK-UP
C10	COIL	C20	IGNITION MODULE	C30	ELECTRONIC IGNITION KIT	E01	IGNITION CABLE SET		

The present application list is a brief version. For the detailed information about the possibility of installation on a specific vehicle, please refer to our web-catalogue http://catalogo.facet.eu/

Vehicle	alim.	kW	Date	Engine	FUNCTIONS ON THE VEHICLE A10	A20	A40	A50	A70	C10 - C30	C20	E01
1.6 16 V	Petrol	77	09/00-06/06	**AUS, AZD, BCB**								
Eng. AZD, BCB	x 4, COIL ON PLUG, incl. spark plug connector									9.6374 C10		
Eng. AUS										9.8120 C30		4.9575
1.8 20V	Petrol	92	11/99-06/06	**AGN, APG**								
All engines										9.8120 C30		4.9489
1.8 20V T	Petrol	132	11/99-06/06	**APP, AUQ**								
Eng. AUQ	x 4, COIL ON PLUG, incl. spark plug connector									9.6329 C10		
Eng. APP	x 4, COIL ON PLUG, incl. spark plug connector									9.6345 C10		
Eng. APP											9.4076	
1.8 20V T 4	Petrol	132	11/99-06/06	**AJQ, ARY**								
Eng. ARY	x 4, COIL ON PLUG, incl. spark plug connector									9.6329 C10		
Eng. AJQ	x 4, COIL ON PLUG, incl. spark plug connector									9.6345 C10		
1.8 T Cupra R	Petrol	154	02/02-06/06	**AMK**								
All engines	x 4, COIL ON PLUG, incl. spark plug connector									9.6329 C10		
1.8 T Cupra R	Petrol	165	07/03-06/06	**BAM**								
All engines	x 4, COIL ON PLUG, incl. spark plug connector									9.6329 C10		
1.8 Turbo 4x4	Petrol	154	05/02-05/03	**AMK**								
All engines	Qty: 4									9.6329 C10		
2.3 V5	Petrol	110	10/98-11/00	**AGZ**								
All engines											9.4074	
2.3 VR5	Petrol	125	09/00-11/03	**AQN**								
All engines	Qty: 5									9.6335 C10		
2.8	Petrol	150	05/02-06/04	**BDE**								
All engines	x 6, COIL ON PLUG, incl. spark plug connector									9.6334 C10		
2.8 Cupra 4	Petrol	150	02/01-06/06	**AUE, BDE**								
All engines	x 6, COIL ON PLUG, incl. spark plug connector									9.6334 C10		
LEON II												
1.2 TSI	Petrol	77	02/10-12/12	**CBZB**								
All engines										9.8120 C30		4.7248
1.4 16V	Petrol	63	06/06-12/12	**BXW**								
All engines	x 4, COIL ON PLUG, incl. spark plug connector									9.6374 C10		
1.4 TSI	Petrol	92	11/07-12/12	**CAXC**								
All engines	x 4, COIL ON PLUG, incl. spark plug connector									9.6374 C10		

A10	CONDENSER	**A20**	CONTACT SET	**A40**	DISTRIBUTOR CAP	**A50**	ROTOR	**A70**	PICK-UP
C10	COIL	**C20**	IGNITION MODULE	**C30**	ELECTRONIC IGNITION KIT	**E01**	IGNITION CABLE SET		

The present application list is a brief version. For the detailed information about the possibility of installation on a specific vehicle, please refer to our web-catalogue http://catalogo.facet.eu/

Vehicle	alim.	kW	Date	Engine	FUNCTIONS ON THE VEHICLE: A10	A20	A40	A50	A70	C10 - C30	C20	E01
1.6	Petrol	75	07/05-12/12	BSE, BSF, CCSA, CMXA								
Eng. BSE, BSF, CCSA										9.8120 C30		
All engines												4.9585
1.6 LPG	Petrol/ Liquified Petro-leum Gas (LPG)	75	12/09-12/12	CHGA								
All engines										9.8120 C30		4.9585
1.6 MultiFuel	Petrol/ Ethanol	75	07/05-08/13	BSE, CCSA, CMXA								
All engines										9.8120 C30		
Eng. BSE, CMXA												4.9585
1.8 TSI	Petrol	118	06/07-12/12	BZB, CDAA								
All engines				x 4, ELDOR, Housing Colour:Black, COIL ON PLUG, incl. spark plug connector						9.6326 C10		
2.0 Cupra R	Petrol	195	09/09-12/12	CDLA								
All engines				x 4, ELDOR, Housing Colour:Black, COIL ON PLUG, incl. spark plug connector						9.6326 C10		
2.0 FSI	Petrol	110	07/05-05/10	BLR, BLY, BVY, BVZ								
All engines				x 4, ELDOR, Housing Colour:Black, COIL ON PLUG, incl. spark plug connector						9.6326 C10		
2.0 TFSI	Petrol	136	09/05-05/06	BWA								
All engines				x 4, ELDOR, Housing Colour:Black, COIL ON PLUG, incl. spark plug connector						9.6326 C10		
2.0 TFSI	Petrol	147	05/05-03/09	BWA								
All engines				x 4, ELDOR, Housing Colour:Black, COIL ON PLUG, incl. spark plug connector						9.6326 C10		
2.0 TFSI	Petrol	155	06/09-12/12	CCZB								
All engines				x 4, COIL ON PLUG, incl. spark plug connector						9.6374 C10		
2.0 TFSI	Petrol	177	11/06-05/11	BWJ, CDLD								
All engines				x 4, ELDOR, Housing Colour:Black, COIL ON PLUG, incl. spark plug connector						9.6326 C10		
LEON III												
1.0 TSi	Petrol	63	09/18->	DKLB								
All engines				x 3, BERU, ELDOR, COIL ON PLUG, incl. spark plug connector, Number of pins:4, incl. spark plug connector						9.6499 C10		
1.0 TSI	Petrol	85	05/15->	CHZD								
All engines				x 3, BERU, ELDOR, x 3, BERU, COIL ON PLUG, ELDOR, COIL ON PLUG, incl. spark plug connector, Number of pins:4, incl. spark plug connector, Number of pins:4, incl. spark plug connector						9.6499 C10		

A10	CONDENSER	A20	CONTACT SET	A40	DISTRIBUTOR CAP	A50	ROTOR	A70	PICK-UP
C10	COIL	C20	IGNITION MODULE	C30	ELECTRONIC IGNITION KIT	E01	IGNITION CABLE SET		

The present application list is a brief version. For the detailed information about the possibility of installation on a specific vehicle, please refer to our web-catalogue http://catalogo.facet.eu/

Vehicle	alim.	kW	Date	Engine	FUNCTIONS ON THE VEHICLE A10	A20	A40	A50	A70	C10 - C30	C20	E01
1.2 TSI	Petrol	63	12/12->	ENGINE CJZB, CYVA						9.6499 C10		
Engine: All engines — Information: x 4, BERU, ELDOR, COIL ON PLUG, incl. spark plug connector, Number of pins:4, incl. spark plug connector												
1.2 TSI	Petrol	77	01/13->	ENGINE CJZA						9.6499 C10		
Engine: All engines — Information: x 4, BERU, ELDOR, COIL ON PLUG, incl. spark plug connector, Number of pins:4, incl. spark plug connector												
1.2 TSI	Petrol	81	04/14->	ENGINE CYVB						9.6499 C10		
Engine: All engines — Information: x 4, BERU, ELDOR, COIL ON PLUG, incl. spark plug connector, Number of pins:4, incl. spark plug connector												
1.4 TGI	Petrol/ Compressed Natural Gas (CNG)	81	02/13->	ENGINE CPWA						9.6499 C10		
Engine: All engines — Information: x 4, BERU, ELDOR, COIL ON PLUG, incl. spark plug connector, Number of pins:4, incl. spark plug connector												
1.4 TSI	Petrol	103	09/12->	ENGINE CHPA						9.6499 C10		
Engine: All engines — Information: x 4, BERU, ELDOR, COIL ON PLUG, incl. spark plug connector, Number of pins:4, incl. spark plug connector												
1.4 TSI	Petrol	110	05/14->	ENGINE CZDA, CZEA						9.6499 C10		
Engine: All engines — Information: x 4, BERU, ELDOR, x 4, BERU, COIL ON PLUG, ELDOR, COIL ON PLUG, incl. spark plug connector, Number of pins:4, incl. spark plug connector, Number of pins:4, incl. spark plug connector												
Engine: Eng. CZDA — Information: Qty: 4										9.6499 C10		
1.4 TSI	Petrol	90	09/12->	ENGINE CMBA, CXSA						9.6499 C10		
Engine: All engines — Information: x 4, BERU, ELDOR, COIL ON PLUG, incl. spark plug connector, Number of pins:4, incl. spark plug connector												
1.4 TSI	Petrol	92	05/14->	ENGINE CZCA						9.6499 C10		
Engine: All engines — Information: x 4, BERU, ELDOR, COIL ON PLUG, incl. spark plug connector, Number of pins:4, incl. spark plug connector												
1.6 TSI	Petrol	81	05/15->	ENGINE CWVA						9.6499 C10		
Engine: All engines — Information: Qty: 4												
1.8 TFSI	Petrol	132	02/13->	ENGINE CJSA						9.6536 C10		
Engine: All engines — Information: ->year 01/09/18, x 4, HITACHI, COIL ON PLUG, incl. spark plug connector												
1.8 TSI	Petrol	132	02/13->	ENGINE CJSA						9.6536 C10		
Engine: All engines — Information: ->year 01/09/18, x 4, HITACHI, x 4, COIL ON PLUG, HITACHI, COIL ON PLUG, incl. spark plug connector, incl. spark plug connector												
1.8 TSI 4Drive	Petrol	132	11/14->	ENGINE CJSA, CJSB						9.6536 C10		
Engine: All engines — Information: ->year 01/09/18, x 4, HITACHI, COIL ON PLUG, incl. spark plug connector												

A10	CONDENSER	A20	CONTACT SET	A40	DISTRIBUTOR CAP	A50	ROTOR	A70	PICK-UP
C10	COIL	C20	IGNITION MODULE	C30	ELECTRONIC IGNITION KIT	E01	IGNITION CABLE SET		

The present application list is a brief version. For the detailed information about the possibility of installation on a specific vehicle, please refer to our web-catalogue http://catalogo.facet.eu/

Vehicle	alim.	kW	Date	Engine	FUNCTIONS ON THE VEHICLE: A10	A20	A40	A50	A70	C10 - C30	C20	E01
2.0 TSI	Petrol	140	09/18->	DKZA						9.6536 C10		
2.0 TSI 4Drive	Petrol	140	09/18->	DKZA						9.6536 C10		

LEON IV

Vehicle	alim.	kW	Date	Engine	A10	A20	A40	A50	A70	C10 - C30	C20	E01
1.0 TSI	Petrol	66	03/20->	DLAB						9.6499 C10		
1.0 TSI	Petrol	81	03/20->	DLAA						9.6499 C10		
1.0 TSI Mild Hybrid	Petrol/ Electric	81	08/20->	DLAA						9.6499 C10		
1.4 TSI e-Hybrid	Petrol/ Electric	110	05/20->	DGEA						9.6499 C10		
1.4 TSI e-Hybrid	Petrol/ Electric	150	05/20->	DGEA						9.6499 C10		
2.0 TFSI	Petrol	140	03/21->	DNNA						9.6536 C10		

MALAGA

Vehicle	alim.	kW	Date	Engine	Information	A10	A20	A40	A50	A70	C10 - C30	C20	E01
1.2	Petrol	44	05/85-12/93	021 A 1000									
					All engines, version Bosch			2.7479PHT	3.7556RS	8.2693			
					All engines, version Marelli			2.8201PHT	3.8247RS				
					All engines								4.8612
1.5	Petrol	63	05/85-12/93	021 A 2000									
					All engines, version Bosch			2.7479PHT	3.7556RS	8.2693			
					All engines, version Marelli			2.8201PHT	3.8247RS				
					All engines								4.8612
1.5 i	Petrol	74	01/87-12/93	021 B.2000	All engines, version Bosch			2.7479PHT	3.7573/21RS				

MARBELLA

Vehicle	alim.	kW	Date	Engine	Information	A10	A20	A40	A50	A70	C10 - C30	C20	E01
0.8	Petrol	25	08/86-12/93	5K9K 718									
					All engines, version Femsa		1.3720	2.7716, 2.7729	3.7752RS				
					All engines, version Marelli		1.4942		3.8242RS				

A10	CONDENSER	A20	CONTACT SET	A40	DISTRIBUTOR CAP	A50	ROTOR	A70	PICK-UP
C10	COIL	C20	IGNITION MODULE	C30	ELECTRONIC IGNITION KIT	E01	IGNITION CABLE SET		

The present application list is a brief version. For the detailed information about the possibility of installation on a specific vehicle, please refer to our web-catalogue http://catalogo.facet.eu/

Vehicle	alim.	kW	Date	Engine	FUNCTIONS ON THE VEHICLE A10	A20	A40	A50	A70	C10 - C30	C20	E01

MARBELLA

				ENGINE
0.8	Petrol	25	08/86-12/93	5K9K 718

Engine	Information	A10	A20	A40	A50	A70	C10 - C30	C20	E01
All engines							9.6001D C10		

				ENGINE
0.9	Petrol	29	01/87-12/93	09 NCA, 100 GL 7000

Engine	Information	A10	A20	A40	A50	A70	C10 - C30	C20	E01
Eng. 09 NCA	version Marelli	0.0628	1.4946M	2.8198PHT	3.8247RS				
Eng. 09 NCA	version Femsa		1.4932	2.7714	3.7752RS				
Eng. 100 GL 7000	version MARELLI			2.8176					
All engines					3.8237				
Eng. 09 NCA							9.6001D C10		

				ENGINE
0.9	Petrol	32	07/97-10/98	08 NCB

Engine	Information	A10	A20	A40	A50	A70	C10 - C30	C20	E01
All engines	version MARELLI			2.8176					

				ENGINE
0.9 Cat	Petrol	29	01/87-11/96	09 NCB, 100 GL 7000

Engine	Information	A10	A20	A40	A50	A70	C10 - C30	C20	E01
All engines	version MARELLI			2.8176					

				ENGINE
0.9 Cat	Petrol	30	11/96-10/98	08 NCB

Engine	Information	A10	A20	A40	A50	A70	C10 - C30	C20	E01
All engines	version MARELLI			2.8176					
All engines	Qty: 2						9.6096 C10		

MII

				ENGINE
1.0	Petrol	44	10/11-07/19	CHYA

Engine	Information	A10	A20	A40	A50	A70	C10 - C30	C20	E01
All engines	x 3, x 4, BERU, ELDOR, HITACHI, COIL ON PLUG, incl. spark plug connector, Number of pins:4, incl. spark plug connector						9.6499 C10		

				ENGINE
1.0	Petrol	55	10/11-07/19	CHYB

Engine	Information	A10	A20	A40	A50	A70	C10 - C30	C20	E01
All engines	x 3, x 4, BERU, ELDOR, HITACHI, COIL ON PLUG, incl. spark plug connector, Number of pins:4, incl. spark plug connector						9.6499 C10		

				ENGINE
1.0 EcoFuel	Petrol/ Com-pressed Natural Gas (CNG)	50	10/12-07/19	CPGA

Engine	Information	A10	A20	A40	A50	A70	C10 - C30	C20	E01
All engines	x 3, x 4, BERU, ELDOR, HITACHI, COIL ON PLUG, incl. spark plug connector, Number of pins:4, incl. spark plug connector						9.6499 C10		

PANDA

				ENGINE
0.9	Petrol	31	10/80-12/86	100 GL 3000

Engine	Information	A10	A20	A40	A50	A70	C10 - C30	C20	E01
All engines	version Femsa		1.4932	2.7714	3.7752RS				
All engines							9.6001D C10		

RONDA

				ENGINE
1.2	Petrol	47	08/83-05/85	021 A 1000

Engine	Information	A10	A20	A40	A50	A70	C10 - C30	C20	E01
All engines	version Femsa				3.7752				
All engines	version Marelli				3.8254RS				

				ENGINE
1.6	Petrol	68	08/83-09/85	138 AR6.000

Engine	Information	A10	A20	A40	A50	A70	C10 - C30	C20	E01
All engines	version Femsa				3.7752				

A10	CONDENSER	A20	CONTACT SET	A40	DISTRIBUTOR CAP	A50	ROTOR	A70	PICK-UP
C10	COIL	C20	IGNITION MODULE	C30	ELECTRONIC IGNITION KIT	E01	IGNITION CABLE SET		

The present application list is a brief version. For the detailed information about the possibility of installation on a specific vehicle, please refer to our web-catalogue http://catalogo.facet.eu/

Vehicle	alim.	kW	Date	Engine	FUNCTIONS ON THE VEHICLE A10	A20	A40	A50	A70	C10 - C30	C20	E01

TARRACO

				ENGINE
1.4 e-HYBRID	Petrol/ Electric	180	02/21->	DGEA

Engine	Information	A10	A20	A40	A50	A70	C10 - C30		C20	E01
All engines	x 4, ELDOR, COIL ON PLUG, incl. spark plug connector, Number of pins:4, incl. spark plug connector						9.6499	C10		

				ENGINE
1.4 TSI Plug in Hybrid	Petrol/ Electric	110	02/21->	DGEA

Engine	Information	A10	A20	A40	A50	A70	C10 - C30		C20	E01
All engines	x 4, ELDOR, COIL ON PLUG, incl. spark plug connector, Number of pins:4, incl. spark plug connector						9.6499	C10		

				ENGINE
2.0 TFSI 4Drive	Petrol	180	01/21->	DNPA

Engine	Information	A10	A20	A40	A50	A70	C10 - C30		C20	E01
All engines	x 4, HITACHI, COIL ON PLUG, incl. spark plug connector						9.6536	C10		

				ENGINE
2.0 TSI 4Drive	Petrol	140	11/18->	DKZA

Engine	Information	A10	A20	A40	A50	A70	C10 - C30		C20	E01
All engines	x 4, HITACHI, COIL ON PLUG, incl. spark plug connector						9.6536	C10		

TERRA

				ENGINE
0.9	Petrol	29	02/87-12/96	09 NCA

Engine	Information	A10	A20	A40	A50	A70	C10 - C30		C20	E01
All engines	version Marelli	0.0628	1.4946M	2.8198PHT	3.8247RS					
All engines	version Femsa		1.4932	2.7714	3.7752RS					
All engines							9.6001D	C10		

				ENGINE
0.9 Cat	Petrol	29	02/92-12/94	09 NCB

Engine	Information	A10	A20	A40	A50	A70	C10 - C30		C20	E01
All engines	Qty: 2						9.6096	C10		

TOLEDO I

				ENGINE
1.6 i	Petrol	52	05/91-12/93	1F

Engine	Information	A10	A20	A40	A50	A70	C10 - C30		C20	E01
All engines	version Bosch, distr. num. 050 905 205 AH			2.7494PHT	3.7573/21RS	8.2723				
All engines	version Bosch, distr. num. 051 905 205			2.7530/36PHT	3.7555RS	8.2659				
All engines	->ch. 1L-ZR001 000						9.6059	C10	9.4007	
All engines	ch. 1L-ZR001 001 ->						9.8114	C30		
All engines										4.8965

				ENGINE
1.6 i	Petrol	54	05/91-03/99	1F, ABN, EZ

Engine	Information	A10	A20	A40	A50	A70	C10 - C30		C20	E01
All engines	version Bosch, distr. num. 050 905 205 AH			2.7494PHT						
Eng. 1F	version Bosch, distr. num. 051 905 205			2.7530/36PHT		8.2659				
All engines	version Bosch, distr. num. 051 905 205				3.7555RS					
Eng. 1F	version Bosch, distr. num. 050 905 205 AH				3.7573/21RS	8.2723				
All engines	->ch. 1L-ZR001 000						9.6059	C10		
All engines	ch. 1L-ZR001 001 ->						9.8114	C30		
Eng. 1F	->ch. 1L-ZR001 000								9.4007	
Eng. ABN, EZ	->ch. 1L-ZD304 850									4.8725
All engines	ch. 1L-ZD304 851 ->									4.8965

				ENGINE
1.6 i	Petrol	55	01/93-03/99	1F

Engine	Information	A10	A20	A40	A50	A70	C10 - C30		C20	E01
All engines	version Bosch, distr. num. 050 905 205 AH			2.7494PHT	3.7573/21RS	8.2723				
All engines	version Bosch, distr. num. 051 905 205			2.7530/36PHT	3.7555RS	8.2659				
All engines	->ch. 1L-ZR001 000						9.6059	C10	9.4007	
All engines	ch. 1L-ZR001 001 ->						9.8114	C30		
All engines										4.8965

A10	CONDENSER	A20	CONTACT SET	A40	DISTRIBUTOR CAP	A50	ROTOR	A70	PICK-UP
C10	COIL	C20	IGNITION MODULE	C30	ELECTRONIC IGNITION KIT	E01	IGNITION CABLE SET		

The present application list is a brief version. For the detailed information about the possibility of installation on a specific vehicle, please refer to our web-catalogue http://catalogo.facet.eu/

Vehicle	alim.	kW	Date	Engine	FUNCTIONS ON THE VEHICLE A10	A20	A40	A50	A70	C10 - C30	C20	E01
1.6 i	Petrol	74	11/96-03/99	AFT								
Engine	Information											
All engines	version Bosch						2.7530/36PHT	3.7573/21RS	8.2723			
All engines										9.8114 C30		4.9937
1.8 16V	Petrol	92	05/91-03/99	PL								
Engine	Information											
All engines	version Bosch						2.7494PHT	3.7573/21RS	8.2733			
All engines										9.6025 C10	9.4007	4.8725
1.8 16V	Petrol	98	05/91-03/99	KR								
Engine	Information											
All engines	version Bosch						2.7494PHT	3.7573/21RS	8.2733			
All engines										9.6025 C10		
1.8 GT	Petrol	102	05/91-11/92	KR								
Engine	Information											
All engines	version Bosch						2.7494PHT	3.7573/21RS	8.2733			
All engines										9.6025 C10		
1.8 i	Petrol	65	05/91-12/96	RP								
Engine	Information											
All engines	version Bosch, distr. num. 050 905 205 AH						2.7494PHT	3.7573/21RS	8.2723			
All engines	version Bosch, distr. num. 050 905 205 A						2.7530/36PHT	3.7555RS	8.2659			
All engines										9.6025 C10	9.4007	
All engines	->ch. 1L-ZD304 850											4.8725
All engines	ch. 1L-ZD304 851 ->											4.8965
1.8 i	Petrol	66	11/93-12/96	ABS, ADZ								
Engine	Information											
Eng. ABS	version Bosch						2.7494PHT		8.2723			
Eng. ADZ	version Bosch						2.7530/36PHT					
Eng. ADZ	version Ducellier						2.7668PHT	3.7699RS				
All engines	version Bosch							3.7573/21RS				
Eng. ABS										9.6059 C10		
All engines	resist. 3700 ohm									9.8114 C30		
Eng. ADZ	resist. 3300 ohm									9.8116 C30		
All engines	->ch. 1L-ZD304 850											4.8725
Eng. ABS	ch. 1L-ZD304 851 ->											4.8965
2.0 i	Petrol	85	05/91-03/99	2E, AGG								
Engine	Information											
Eng. 2E	version Bosch						2.7494PHT					
Eng. AGG	version Bosch						2.7530/36PHT		8.2723			
All engines	version Bosch							3.7573/21RS				
Eng. 2E										9.6059 C10		
All engines	resist. 3700 ohm									9.8114 C30		
Eng. AGG	resist. 3300 ohm									9.8116 C30		
Eng. 2E	->ch. 1L-ZD304 850											4.8725
All engines	ch. 1L-ZD304 851 ->											4.8965
2.0 i 16V	Petrol	110	11/93-03/99	ABF								
Engine	Information											
All engines	version Bosch						2.7530/33PHT		8.2723			
All engines										9.6059, 9.8114 C10, C30		
TOLEDO II												
1.4 16V	Petrol	55	01/00-05/02	2CJXE, AHW, AXP, BCA								
Engine	Information											
Eng. BCA	x 4, COIL ON PLUG, incl. spark plug connector									9.6374 C10		
Eng. 2CJXE, AHW, AXP										9.8120 C30		4.9575

A10	CONDENSER	A20	CONTACT SET	A40	DISTRIBUTOR CAP	A50	ROTOR	A70	PICK-UP
C10	COIL	C20	IGNITION MODULE	C30	ELECTRONIC IGNITION KIT	E01	IGNITION CABLE SET		

The present application list is a brief version. For the detailed information about the possibility of installation on a specific vehicle, please refer to our web-catalogue http://catalogo.facet.eu/

Vehicle	alim.	kW	Date	Engine	FUNCTIONS ON THE VEHICLE: A10	A20	A40	A50	A70	C10 - C30	C20	E01
1.6	Petrol	74	10/98-07/04	**AEH, AKL, APF**								
Engine: All engines	Information:									9.8120 C30		4.9484
1.6 16V	Petrol	77	06/00-05/06	**AUS, AZD, BCB**								
Eng. AZD, BCB	x 4, COIL ON PLUG, incl. spark plug connector									9.6374 C10		
Eng. AUS										9.8120 C30		4.9575
1.8 20V	Petrol	92	10/98-07/04	**AGN, APG**								
All engines										9.8120 C30		4.9489
1.8 20VT	Petrol	132	09/00-07/04	**APP, AUQ**								
Eng. APP	x 4, COIL ON PLUG, incl. spark plug connector									9.6329 C10		
Eng. AUQ	x 4, COIL ON PLUG, incl. spark plug connector									9.6345 C10		
1.8 4x4	Petrol	132	05/01-04/04	**AJQ**								
All engines	Qty: 4									9.6345 C10		
2.3 V5	Petrol	110	10/98-11/00	**AGZ**								
All engines											9.4074	
2.3 V5 20V	Petrol	125	09/00-11/03	**AQN**								
All engines	x 5, COIL ON PLUG									9.6335 C10		
TOLEDO III												
1.4 16V	Petrol	63	05/06-05/09	**BXW**								
All engines	x 4, COIL ON PLUG, incl. spark plug connector									9.6374 C10		
1.6	Petrol	75	10/04-05/09	**BGU, BSE, BSF, CCSA**								
All engines										9.8120 C30		
Eng. BGU, BSE, BSF												4.9585
1.8 TFSI	Petrol	118	01/07-05/09	**BYT, BZB, CDAA**								
All engines	x 4, ELDOR, Housing Colour:Black, COIL ON PLUG, incl. spark plug connector									9.6326 C10		
2.0 FSI	Petrol	110	10/04-05/09	**BLR, BLY, BVY, BVZ**								
All engines	x 4, ELDOR, Housing Colour:Black, COIL ON PLUG, incl. spark plug connector									9.6326 C10		
2.0 TFSI	Petrol	147	11/05-05/09	**BWA**								
All engines	x 4, ELDOR, Housing Colour:Black, COIL ON PLUG, incl. spark plug connector									9.6326 C10		
TOLEDO IV												
1.0 TSI	Petrol	70	05/17-04/19	**CHZB, DKLD**								
All engines	x 3, BERU, ELDOR, COIL ON PLUG, incl. spark plug connector, Number of pins:4, incl. spark plug connector									9.6499 C10		

A10	CONDENSER	**A20**	CONTACT SET	**A40**	DISTRIBUTOR CAP	**A50**	ROTOR	**A70**	PICK-UP
C10	COIL	**C20**	IGNITION MODULE	**C30**	ELECTRONIC IGNITION KIT	**E01**	IGNITION CABLE SET		

The present application list is a brief version. For the detailed information about the possibility of installation on a specific vehicle, please refer to our web-catalogue http://catalogo.facet.eu/

Vehicle	alim.	kW	Date	Engine	FUNCTIONS ON THE VEHICLE							
					A10	A20	A40	A50	A70	C10 - C30	C20	E01
1.0 TSI	Petrol	81	05/17-04/19	**CHZC, DKRC**								
Engine: All engines — Information: x 3, BERU, ELDOR, COIL ON PLUG, incl. spark plug connector, Number of pins:4, incl. spark plug connector										9.6499 C10		
1.2	Petrol	55	07/12-06/15	**CGPC**								
Engine: All engines — Information: x 3, COIL ON PLUG, incl. spark plug connector										9.6374 C10		
1.2 TSI	Petrol	63	07/12-06/15	**CBZA**								
Engine: All engines										9.8120 C30		4.7248
1.2 TSI	Petrol	66	05/15-05/17	**CJZC**								
Engine: All engines — Information: x 4, BERU, ELDOR, COIL ON PLUG, incl. spark plug connector, Number of pins:4, incl. spark plug connector										9.6499 C10		
1.2 TSI	Petrol	77	07/12-06/15	**CBZB**								
Engine: All engines										9.8120 C30		4.7248
1.2 TSI	Petrol	81	05/15-05/17	**CJZD**								
Engine: All engines — Information: x 4, BERU, ELDOR, COIL ON PLUG, incl. spark plug connector, Number of pins:4, incl. spark plug connector										9.6499 C10		
1.4 TSI	Petrol	90	07/12-06/15	**CAXA**								
Engine: All engines — Information: x 4, COIL ON PLUG, incl. spark plug connector										9.6374 C10		
1.4 TSI	Petrol	92	05/15-04/19	**CZCA**								
Engine: All engines — Information: x 4, BERU, ELDOR, COIL ON PLUG, incl. spark plug connector, Number of pins:4, incl. spark plug connector										9.6499 C10		
1.6	Petrol	77	07/13-06/15	**CFNA**								
Engine: All engines — Information: x 4, COIL ON PLUG, incl. spark plug connector										9.6374 C10		
1.6	Petrol	81	05/15-04/19	**CWVA**								
Engine: All engines — Information: x 4, BERU, ELDOR, COIL ON PLUG, incl. spark plug connector, Number of pins:4, incl. spark plug connector										9.6499 C10		

A10	CONDENSER	**A20**	CONTACT SET	**A40**	DISTRIBUTOR CAP	**A50**	ROTOR	**A70**	PICK-UP
C10	COIL	**C20**	IGNITION MODULE	**C30**	ELECTRONIC IGNITION KIT	**E01**	IGNITION CABLE SET		

The present application list is a brief version. For the detailed information about the possibility of installation on a specific vehicle, please refer to our web-catalogue http://catalogo.facet.eu/

Vehicle	alim.	kW	Date	Engine	FUNCTIONS ON THE VEHICLE A10	A20	A40	A50	A70	C10 - C30	C20	E01
105,120												
1.0 105 S, L	Petrol	32	02/88-12/90	**742.10**								
Engine: All engines	Information: 01/08/83 ->, version PAL					1.5945	2.8342	3.8362RS				
1.0 105 S, L	Petrol	34	08/76-12/90	**742.10**								
Engine: All engines	Information: 01/08/83 ->, version PAL					1.5945	2.8342	3.8362RS				
1.0 105 S, L, GL	Petrol	33	08/76-08/83	**742.10**								
Engine: All engines	Information: 01/08/83 ->, version PAL					1.5945	2.8342	3.8362RS				
1.0 105 S, L, LS	Petrol	33	10/83-12/90	**742.10**								
Engine: All engines	Information: 01/08/83 ->, version PAL					1.5945	2.8342	3.8362RS				
1.2 120 GLS	Petrol	43	02/83-12/90	**742.12X**								
Engine: All engines	Information: 01/08/83 ->, version PAL					1.5945	2.8342	3.8362RS				
1.2 120 L	Petrol	35	08/87-12/90	**742.12**								
Engine: All engines	Information: 01/08/83 ->, version PAL					1.5945	2.8342	3.8362RS				
1.2 120 L	Petrol	38	08/76-12/90	**742.12, 742.12X**								
Engine: All engines	Information: 01/08/83 ->, version PAL					1.5945	2.8342	3.8362RS				
1.2 120 LS	Petrol	43	08/76-12/90	**742.12X**								
Engine: All engines	Information: 01/08/83 ->, version PAL					1.5945	2.8342	3.8362RS				
CITIGO												
1.0	Petrol	44	10/11-08/19	**CHYA**								
Engine: All engines	Information: x 3, BERU, ELDOR, HITACHI, COIL ON PLUG, incl. spark plug connector, Number of pins:4, incl. spark plug connector									9.6499 C10		
1.0	Petrol	55	10/11-08/19	**CHYB**								
Engine: All engines	Information: x 3, BERU, ELDOR, HITACHI, COIL ON PLUG, incl. spark plug connector, Number of pins:4, incl. spark plug connector									9.6499 C10		
1.0 CNG	CNG	50	11/12-08/19	**CPGA**								
Engine: All engines	Information: x 3, x 4, BERU, ELDOR, HITACHI, COIL ON PLUG, incl. spark plug connector, Number of pins:4, incl. spark plug connector									9.6499 C10		
FABIA												
1.0 TSI	Petrol	70	06/21->	**DLAC**								
Engine: All engines	Information: x 3, version 1, version 2, ELDOR, COIL ON PLUG, incl. spark plug connector									9.6499 C10		
1.0 TSI	Petrol	81	06/21->	**DLAA**								
Engine: All engines	Information: x 3, version 1, version 2, ELDOR, COIL ON PLUG, incl. spark plug connector									9.6499 C10		

A10	CONDENSER	**A20**	CONTACT SET	**A40**	DISTRIBUTOR CAP	**A50**	ROTOR	**A70**	PICK-UP
C10	COIL	**C20**	IGNITION MODULE	**C30**	ELECTRONIC IGNITION KIT	**E01**	IGNITION CABLE SET		

The present application list is a brief version. For the detailed information about the possibility of installation on a specific vehicle, please refer to our web-catalogue http://catalogo.facet.eu/

Vehicle	alim.	kW	Date	Engine	FUNCTIONS ON THE VEHICLE A10	A20	A40	A50	A70	C10 - C30	C20	E01

FABIA I

				ENGINE
1.2	Petrol	40	07/01-12/07	AWY, BMD

Engine	Information	A10	A20	A40	A50	A70	C10 - C30		C20	E01
All engines	x 3, COIL ON PLUG, incl. spark plug connector						9.6331	C10		

				ENGINE
1.2	Petrol	47	01/03-03/08	AZQ, BME

Engine	Information	A10	A20	A40	A50	A70	C10 - C30		C20	E01
All engines	x 3, COIL ON PLUG, incl. spark plug connector						9.6374	C10		

				ENGINE
1.4	Petrol	55	05/04-12/07	BKY

Engine	Information	A10	A20	A40	A50	A70	C10 - C30		C20	E01
All engines	x 4, COIL ON PLUG, incl. spark plug connector						9.6374	C10		

				ENGINE
1.4 16V	Petrol	55	10/99-03/08	AUA, BBY, BKY

Engine	Information	A10	A20	A40	A50	A70	C10 - C30		C20	E01
Eng. BBY, BKY	ch. 6Y2535495 ->, x 4, COIL ON PLUG, incl. spark plug connector						9.6374	C10		
Eng. AUA, BBY							9.8120	C30		
Eng. AUA, BBY	->year 30/04/02									4.9575

				ENGINE
1.4 16V	Petrol	59	04/06-12/07	BUD

Engine	Information	A10	A20	A40	A50	A70	C10 - C30		C20	E01
All engines	x 4, COIL ON PLUG, incl. spark plug connector						9.6374	C10		

				ENGINE
1.4 16V	Petrol	74	12/99-03/08	AUB, BBZ

Engine	Information	A10	A20	A40	A50	A70	C10 - C30		C20	E01
All engines	01/05/02 ->, ch. 6Y2535495 ->, x 4, COIL ON PLUG, x 4, COIL ON PLUG, incl. spark plug connector, incl. spark plug connector						9.6374	C10		
All engines							9.8120	C30		
All engines	->year 30/04/02									4.9575

				ENGINE
2.0	Petrol	85	12/99-03/08	AZL

Engine	Information	A10	A20	A40	A50	A70	C10 - C30		C20	E01
All engines							9.8120	C30		4.9585

FABIA II

				ENGINE
1.2	Petrol	44	12/06-12/14	BBM, CHFA

Engine	Information	A10	A20	A40	A50	A70	C10 - C30		C20	E01
All engines	x 3, COIL ON PLUG, incl. spark plug connector						9.6331	C10		

				ENGINE
1.2	Petrol	51	01/07-12/14	BZG, CEVA, CGPA, CHTA

Engine	Information	A10	A20	A40	A50	A70	C10 - C30		C20	E01
All engines	x 3, COIL ON PLUG, incl. spark plug connector						9.6374	C10		

				ENGINE
1.2 [IND]	Petrol	55	09/10->	CJLA

Engine	Information	A10	A20	A40	A50	A70	C10 - C30		C20	E01
All engines	Qty: 3						9.6374	C10		

				ENGINE
1.2 12V	Petrol	44	11/11-12/14	CGPB

Engine	Information	A10	A20	A40	A50	A70	C10 - C30		C20	E01
All engines	x 3, COIL ON PLUG, incl. spark plug connector						9.6374	C10		

				ENGINE
1.2 LPG	Petrol/ Liquified Petro-leum Gas (LPG)	44	03/09-11/11	CHFA

Engine	Information	A10	A20	A40	A50	A70	C10 - C30		C20	E01
All engines	x 3, COIL ON PLUG, incl. spark plug connector						9.6331	C10		

A10	CONDENSER	A20	CONTACT SET	A40	DISTRIBUTOR CAP	A50	ROTOR	A70	PICK-UP
C10	COIL	C20	IGNITION MODULE	C30	ELECTRONIC IGNITION KIT	E01	IGNITION CABLE SET		

The present application list is a brief version. For the detailed information about the possibility of installation on a specific vehicle, please refer to our web-catalogue http://catalogo.facet.eu/

Vehicle	alim.	kW	Date	Engine	FUNCTIONS ON THE VEHICLE A10	A20	A40	A50	A70	C10 - C30	C20	E01
1.2 LPG	Petrol/ Liquified Petro-leum Gas (LPG)	51	07/07-11/14	**CGPA**								

Engine	Information	A10	A20	A40	A50	A70	C10 - C30		C20	E01
All engines	x 3, COIL ON PLUG, incl. spark plug connector						9.6374	C10		

1.2 TSI	Petrol	63	03/10-12/14	**CBZA**

Engine	Information	A10	A20	A40	A50	A70	C10 - C30		C20	E01
All engines							9.8120	C30		4.7248

1.2 TSI	Petrol	77	03/10-12/14	**CBZB**

Engine	Information	A10	A20	A40	A50	A70	C10 - C30		C20	E01
All engines							9.8120	C30		4.7248

1.4	Petrol	63	01/07-12/14	**BXW, CGGB**

Engine	Information	A10	A20	A40	A50	A70	C10 - C30		C20	E01
All engines	x 4, COIL ON PLUG, incl. spark plug connector						9.6374	C10		

1.4 [CHN]	Petrol	63	12/08->	**CLPA**

Engine	Information	A10	A20	A40	A50	A70	C10 - C30		C20	E01
All engines	Qty: 4						9.6374	C10		

1.4 LPG	Petrol/ Liquified Petro-leum Gas (LPG)	63	01/07-11/14	**BXW, CGGB**

Engine	Information	A10	A20	A40	A50	A70	C10 - C30		C20	E01
All engines	x 4, COIL ON PLUG, incl. spark plug connector						9.6374	C10		

1.4 TSI RS	Petrol	132	05/10-12/14	**CAVE, CTHE**

Engine	Information	A10	A20	A40	A50	A70	C10 - C30		C20	E01
All engines	x 4, COIL ON PLUG, incl. spark plug connector						9.6374	C10		

1.6	Petrol	77	04/07-12/14	**BTS, CFNA, CLSA**

Engine	Information	A10	A20	A40	A50	A70	C10 - C30		C20	E01
Eng. BTS, CFNA	x 4, COIL ON PLUG, incl. spark plug connector						9.6374	C10		
Eng. CLSA	Qty: 4						9.6374	C10		

FABIA III

1.0	Petrol	44	08/14->	**CHYA, CHYE**

Engine	Information	A10	A20	A40	A50	A70	C10 - C30		C20	E01
All engines	x 3, BERU, x 3, COIL ON PLUG, ELDOR, COIL ON PLUG, incl. spark plug connector, incl. spark plug connector, Number of pins:4, incl. spark plug connector						9.6499	C10		

1.0	Petrol	55	08/14->	**CHYB**

Engine	Information	A10	A20	A40	A50	A70	C10 - C30		C20	E01
All engines	x 3, BERU, x 3, COIL ON PLUG, ELDOR, COIL ON PLUG, incl. spark plug connector, incl. spark plug connector, Number of pins:4, incl. spark plug connector						9.6499	C10		

1.0 TSI	Petrol	70	08/14->	**CHZB, DKLD**

Engine	Information	A10	A20	A40	A50	A70	C10 - C30		C20	E01
All engines	x 3, BERU, x 3, COIL ON PLUG, ELDOR, COIL ON PLUG, incl. spark plug connector, incl. spark plug connector, Number of pins:4, incl. spark plug connector						9.6499	C10		

1.0 TSI	Petrol	81	08/14->	**CHZC, DKRC**

Engine	Information	A10	A20	A40	A50	A70	C10 - C30		C20	E01
All engines	x 3, BERU, x 3, COIL ON PLUG, ELDOR, COIL ON PLUG, incl. spark plug connector, incl. spark plug connector, Number of pins:4, incl. spark plug connector						9.6499	C10		

A10	CONDENSER	**A20**	CONTACT SET	**A40**	DISTRIBUTOR CAP	**A50**	ROTOR	**A70**	PICK-UP
C10	COIL	**C20**	IGNITION MODULE	**C30**	ELECTRONIC IGNITION KIT	**E01**	IGNITION CABLE SET		

The present application list is a brief version. For the detailed information about the possibility of installation on a specific vehicle, please refer to our web-catalogue http://catalogo.facet.eu/

Vehicle	alim.	kW	Date	Engine	FUNCTIONS ON THE VEHICLE A10	A20	A40	A50	A70	C10 - C30	C20	E01
1.2 TSI	Petrol	66	08/14->	CJZC						9.6499 C10		
All engines	x 4, BERU, x 4, COIL ON PLUG, ELDOR, COIL ON PLUG, incl. spark plug connector, incl. spark plug connector, Number of pins:4, incl. spark plug connector											
1.2 TSI	Petrol	81	08/14->	CJZD						9.6499 C10		
All engines	x 4, BERU, x 4, COIL ON PLUG, ELDOR, COIL ON PLUG, incl. spark plug connector, incl. spark plug connector, Number of pins:4, incl. spark plug connector											
1.4 TSI R5	Petrol	92	02/18->	CZCA						9.6499 C10		
All engines	x 4, BERU, x 4, COIL ON PLUG, ELDOR, COIL ON PLUG, incl. spark plug connector, incl. spark plug connector, Number of pins:4, incl. spark plug connector											
1.6	Petrol	66	01/15->	CWVB						9.6499 C10		
All engines	Qty: 4, version BERU, version ELDOR, Qty: 4											
1.6	Petrol	81	01/15->	CWVA						9.6499 C10		
All engines	x 4, BERU, x 4, COIL ON PLUG, ELDOR, COIL ON PLUG, incl. spark plug connector, incl. spark plug connector, Number of pins:4, incl. spark plug connector											
FAVORIT												
1.3	Petrol	40	09/91-06/97	135B, 781.135E								
All engines	version PAL						2.8342	3.8363RS				
All engines										9.8114 C30		
1.3	Petrol	42	12/92-06/97	781.135								
All engines	version PAL						2.8342	3.8362RS, 3.8363RS				
1.3	Petrol	44	12/91-06/95	781.135								
All engines	version PAL						2.8342	3.8362RS, 3.8363RS				
1.3	Petrol	45	08/91-06/95	OHC								
All engines	version PAL						2.8342	3.8362RS, 3.8363RS				
1.3	Petrol	50	12/92-06/97	136B								
All engines	version PAL						2.8342	3.8363RS				
All engines										9.8114 C30		
1.3 135	Petrol	42	12/91-09/94	781.135								
All engines	version PAL						2.8342	3.8362RS, 3.8363RS				
1.3 135	Petrol	43	12/91-09/94	781.135								
All engines	version PAL						2.8342	3.8362RS, 3.8363RS				
1.3 135	Petrol	44	10/90-09/94	781.135								
All engines	version PAL						2.8342	3.8362RS, 3.8363RS				

A10	CONDENSER	A20	CONTACT SET	A40	DISTRIBUTOR CAP	A50	ROTOR	A70	PICK-UP
C10	COIL	C20	IGNITION MODULE	C30	ELECTRONIC IGNITION KIT	E01	IGNITION CABLE SET		

The present application list is a brief version. For the detailed information about the possibility of installation on a specific vehicle, please refer to our web-catalogue http://catalogo.facet.eu/

Vehicle	alim.	kW	Date	Engine	FUNCTIONS ON THE VEHICLE A10	A20	A40	A50	A70	C10 - C30	C20	E01
1.3 135 X, LX, GLX	Petrol	40	01/90-09/94	**781.135E**								

Engine	Information	A10	A20	A40	A50	A70	C10 - C30	C20	E01
All engines	version PAL			2.8342	3.8363RS				
All engines							9.8114 C30		

Vehicle	alim.	kW	Date	Engine
1.3 135L	Petrol	43	05/89-09/94	**781.135**

Engine	Information	A10	A20	A40	A50	A70	C10 - C30	C20	E01
All engines	version PAL			2.8342	3.8362RS, 3.8363RS				

Vehicle	alim.	kW	Date	Engine
1.3 136	Petrol	45	10/90-09/94	**136 L**

Engine	Information	A10	A20	A40	A50	A70	C10 - C30	C20	E01
All engines	version PAL			2.8342	3.8362RS, 3.8363RS				

FELICIA

Vehicle	alim.	kW	Date	Engine
1.3	Petrol	40	10/94-04/02	**135, 135I**

Engine	Information	A10	A20	A40	A50	A70	C10 - C30	C20	E01
All engines							9.8114 C30		

Vehicle	alim.	kW	Date	Engine
1.3	Petrol	43	10/94-03/98	**135L**

Engine	Information	A10	A20	A40	A50	A70	C10 - C30	C20	E01
All engines	version Pal			2.8343	3.8362RS				
All engines									4.9373

Vehicle	alim.	kW	Date	Engine
1.3	Petrol	50	10/94-04/02	**136 I, 136B**

Engine	Information	A10	A20	A40	A50	A70	C10 - C30	C20	E01
All engines							9.8114 C30		

Vehicle	alim.	kW	Date	Engine
1.3 LXI	Petrol	50	08/95-03/98	**136 I**

Engine	Information	A10	A20	A40	A50	A70	C10 - C30	C20	E01
All engines							9.8114 C30		

Vehicle	alim.	kW	Date	Engine
1.6	Petrol	55	06/97-04/02	**6A 16 XHT, AEE**

Engine	Information	A10	A20	A40	A50	A70	C10 - C30	C20	E01
Eng. 6A 16 XHT	version Bosch			2.7494PHT	3.7573/21RS	8.2723			
Eng. 6A 16 XHT	version Marelli			2.8216PHT	3.8257RS				
Eng. AEE							9.8114 C30		
Eng. 6A 16 XHT									4.9569

Vehicle	alim.	kW	Date	Engine
1.6 GLX	Petrol	55	08/95-03/98	**6A 16 XHT, AEE**

Engine	Information	A10	A20	A40	A50	A70	C10 - C30	C20	E01
Eng. 6A 16 XHT	version Bosch			2.7494PHT	3.7573/21RS	8.2723			
Eng. 6A 16 XHT	version Marelli			2.8216PHT	3.8257RS				
Eng. AEE							9.8114 C30		
Eng. 6A 16 XHT									4.9569

Vehicle	alim.	kW	Date	Engine
1.6 LX	Petrol	55	08/95-03/98	**6A 16 XHT, AEE**

Engine	Information	A10	A20	A40	A50	A70	C10 - C30	C20	E01
Eng. 6A 16 XHT	version Bosch			2.7494PHT	3.7573/21RS	8.2723			
Eng. 6A 16 XHT	version Marelli			2.8216PHT	3.8257RS				
Eng. AEE							9.8114 C30		
Eng. 6A 16 XHT									4.9569

KAMIQ

Vehicle	alim.	kW	Date	Engine
1.0 TGI CNG	Petrol/ Compressed Natural Gas (CNG)	66	11/19->	**DBYA**

Engine	Information	A10	A20	A40	A50	A70	C10 - C30	C20	E01
All engines	x 3, BERU, ELDOR, COIL ON PLUG, incl. spark plug connector, Number of pins:4, incl. spark plug connector						9.6499 C10		

A10	CONDENSER	**A20**	CONTACT SET	**A40**	DISTRIBUTOR CAP	**A50**	ROTOR	**A70**	PICK-UP
C10	COIL	**C20**	IGNITION MODULE	**C30**	ELECTRONIC IGNITION KIT	**E01**	IGNITION CABLE SET		

The present application list is a brief version. For the detailed information about the possibility of installation on a specific vehicle, please refer to our web-catalogue http://catalogo.facet.eu/

Vehicle	alim.	kW	Date	Engine	FUNCTIONS ON THE VEHICLE A10	A20	A40	A50	A70	C10 - C30	C20	E01
1.0 TSI	Petrol	70	07/19->	DKLA						9.6499 C10		
All engines	x 3, BERU, ELDOR, COIL ON PLUG, incl. spark plug connector, Number of pins:4, incl. spark plug connector											
1.0 TSI	Petrol	85	07/19->	DKJA, DKRF						9.6499 C10		
All engines	x 3, BERU, ELDOR, COIL ON PLUG, incl. spark plug connector, Number of pins:4, incl. spark plug connector											
1.6 SRE	Petrol	81	07/19->	CWVA						9.6499 C10		
All engines	x 4, BERU, ELDOR, COIL ON PLUG, incl. spark plug connector, Number of pins:4, incl. spark plug connector											
KAROQ												
1.0 TSI	Petrol	85	07/17->	CHZJ, DKRF						9.6499 C10		
All engines	x 3, BERU, ELDOR, COIL ON PLUG, incl. spark plug connector, Number of pins:4, incl. spark plug connector											
1.4 TSI	Petrol	110	07/17->	CZEA, DJKA						9.6499 C10		
All engines	x 4, BERU, ELDOR, COIL ON PLUG, incl. spark plug connector, Number of pins:4, incl. spark plug connector											
2.0 TSI 4x4	Petrol	140	04/19->	DKZA, DNNA						9.6536 C10		
All engines	x 4, ELDOR, HITACHI, COIL ON PLUG, Colour:Black, COIL ON PLUG, incl. spark plug connector, incl. spark plug connector											
KODIAQ												
1.4 TSI	Petrol	110	10/16->	CZDA, CZEA						9.6499 C10		
All engines	x 4, BERU, ELDOR, COIL ON PLUG, incl. spark plug connector, Number of pins:4, incl. spark plug connector											
1.4 TSI	Petrol	92	10/16->	CZCA						9.6499 C10		
All engines	x 4, BERU, ELDOR, COIL ON PLUG, incl. spark plug connector, Number of pins:4, incl. spark plug connector											
1.4 TSI 4x4	Petrol	110	10/16->	CZDA, CZEA						9.6499 C10		
All engines	x 4, BERU, ELDOR, COIL ON PLUG, incl. spark plug connector, Number of pins:4, incl. spark plug connector											
2.0 TSI 4x4	Petrol	132	10/16->	CZPA						9.6536 C10		
All engines	x 4, ELDOR, Colour:Black, COIL ON PLUG, incl. spark plug connector											
2.0 TSI 4x4	Petrol	140	02/19->	DKZA, DNNA						9.6536 C10		
All engines	x 4, ELDOR, Colour:Black, COIL ON PLUG, incl. spark plug connector											
OCTAVIA I												
1.4 16V	Petrol	55	08/00-12/10	AXP, BCA								
Eng. BCA	x 4, COIL ON PLUG, incl. spark plug connector									9.6374 C10		
Eng. AXP										9.8120 C30		
All engines												4.9575
1.6	Petrol	55	09/96-09/04	6A 16 XHT, AEE								
Eng. 6A 16 XHT	version Bosch						2.7494PHT	3.7573/21RS	8.2723			

A10	CONDENSER	A20	CONTACT SET	A40	DISTRIBUTOR CAP	A50	ROTOR	A70	PICK-UP
C10	COIL	C20	IGNITION MODULE	C30	ELECTRONIC IGNITION KIT	E01	IGNITION CABLE SET		

The present application list is a brief version. For the detailed information about the possibility of installation on a specific vehicle, please refer to our web-catalogue http://catalogo.facet.eu/

Vehicle	alim.	kW	Date	Engine	FUNCTIONS ON THE VEHICLE A10	A20	A40	A50	A70	C10 - C30	C20	E01
1.6	Petrol	55	09/96-09/04	6A 16 XHT, AEE								

Engine	Information	A10	A20	A40	A50	A70	C10 - C30	C20	E01
Eng. 6A 16 XHT	version Marelli			2.8216PHT	3.8257RS				
Eng. AEE							9.8114 C30		
Eng. 6A 16 XHT									4.9609

1.6	Petrol	74	02/97-12/07	AEH, AKL

Engine	Information	A10	A20	A40	A50	A70	C10 - C30	C20	E01
All engines							9.8120 C30		
All engines	ch. 1U-V-005 001 ->, ->ch. 1U-W-060 000								4.9479
All engines	ch. 1U-W-060 001 ->								4.9484

1.6	Petrol	75	09/00-12/10	AVU, BFQ

Engine	Information	A10	A20	A40	A50	A70	C10 - C30	C20	E01
All engines							9.8120 C30		4.9585

1.8	Petrol	92	09/96-07/00	AGN

Engine	Information	A10	A20	A40	A50	A70	C10 - C30	C20	E01
All engines							9.8120 C30		
All engines	ch. 1U-V-026 001 ->								4.9489

1.8 20V	Petrol	92	07/98-07/00	AGN

Engine	Information	A10	A20	A40	A50	A70	C10 - C30	C20	E01
All engines							9.8120 C30		
All engines	ch. 1U-V-026 001 ->								4.9489

1.8 T	Petrol	110	08/97-12/10	AGU, ARX, ARZ, AUM

Engine	Information	A10	A20	A40	A50	A70	C10 - C30	C20	E01
Eng. AGU	x 4, COIL ON PLUG						9.6254S C10		
Eng. ARZ	x 4, COIL ON PLUG, incl. spark plug connector						9.6329 C10		
Eng. ARX, AUM	x 4, COIL ON PLUG, incl. spark plug connector						9.6345 C10		
Eng. AGU, ARX, AUM								9.4076	

1.8 T 4x4	Petrol	110	05/01-05/06	ARX

Engine	Information	A10	A20	A40	A50	A70	C10 - C30	C20	E01
All engines	x 4, COIL ON PLUG, incl. spark plug connector						9.6329 C10		
All engines								9.4076	

2.0	Petrol	85	04/99-05/07	AEG, APK, AQY, AZH, AZJ

Engine	Information	A10	A20	A40	A50	A70	C10 - C30	C20	E01
Eng. AEG, APK, AQY							9.8120 C30		
Eng. AZJ									4.7223
Eng. AEG, APK, AQY, AZH									4.9585

2.0 4x4	Petrol	85	08/00-09/04	AZH, AZJ

Engine	Information	A10	A20	A40	A50	A70	C10 - C30	C20	E01
Eng. AZH							9.8120 C30		4.9585
Eng. AZJ									4.7223

RS 1.8 T	Petrol	132	05/01-01/06	AUQ

Engine	Information	A10	A20	A40	A50	A70	C10 - C30	C20	E01
All engines	x 4, COIL ON PLUG, incl. spark plug connector						9.6329 C10		
All engines								9.4076	

OCTAVIA II

1.2 TSI	Petrol	77	02/10-06/13	CBZB

Engine	Information	A10	A20	A40	A50	A70	C10 - C30	C20	E01
All engines							9.8120 C30		4.7248

A10	CONDENSER	A20	CONTACT SET	A40	DISTRIBUTOR CAP	A50	ROTOR	A70	PICK-UP
C10	COIL	C20	IGNITION MODULE	C30	ELECTRONIC IGNITION KIT	E01	IGNITION CABLE SET		

The present application list is a brief version. For the detailed information about the possibility of installation on a specific vehicle, please refer to our web-catalogue http://catalogo.facet.eu/

Vehicle	alim.	kW	Date	Engine	FUNCTIONS ON THE VEHICLE A10	A20	A40	A50	A70	C10 - C30	C20	E01
1.4	Petrol	55	05/04-05/06	**BCA**						9.6374 C10		
All engines	x 4, COIL ON PLUG, incl. spark plug connector											
1.4	Petrol	59	06/04-06/13	**BUD, CGGA**						9.6374 C10		
All engines	x 4, COIL ON PLUG, incl. spark plug connector											
1.4 [CHN]	Petrol	96	03/10->	**CFBA.**						9.6374 C10		
All engines	Qty: 4											
1.4 TSI	Petrol	90	11/08-06/13	**CAXA**						9.6374 C10		
All engines	x 4, COIL ON PLUG, incl. spark plug connector											
1.6	Petrol	75	06/04-06/13	**BGU, BSE, BSF, CCSA, CMXA**						9.8120 C30		4.9585
All engines												
1.6 [CHN]	Petrol	77	09/07->	**CDFA, CLRA, CPJA**						9.6374 C10		
All engines	Qty: 4											
1.6 FSI	Petrol	85	02/04-10/08	**BLF**						9.6374 C10		
All engines	x 4, COIL ON PLUG, incl. spark plug connector											
1.6 LPG	Petrol/ Liquified Petro-leum Gas (LPG)	75	08/09-11/12	**BSE, CHGA**						9.8120 C30		
All engines												
Eng. CHGA												4.9585
1.6 MultiFuel	Petrol/ Ethanol	75	01/08-06/13	**CCSA, CMXA**						9.8120 C30		
Eng. CCSA												
All engines												4.9585
1.8 TSI	Petrol	112	03/09-06/13	**CDAB**						9.6326 C10		
All engines	x 4, ELDOR, Housing Colour:Black, COIL ON PLUG, incl. spark plug connector											
1.8 TSI	Petrol	118	06/07-04/13	**BZB, CDAA**						9.6326 C10		
All engines	x 4, ELDOR, Housing Colour:Black, COIL ON PLUG, incl. spark plug connector											
1.8 TSI 4x4	Petrol	112	03/09-02/13	**CDAB**						9.6326 C10		
All engines	x 4, ELDOR, Housing Colour:Black, COIL ON PLUG, incl. spark plug connector											
1.8 TSI 4x4	Petrol	118	11/08-02/13	**CDAA**						9.6326 C10		
All engines	x 4, ELDOR, Housing Colour:Black, COIL ON PLUG, incl. spark plug connector											

A10	CONDENSER	**A20**	CONTACT SET	**A40**	DISTRIBUTOR CAP	**A50**	ROTOR	**A70**	PICK-UP
C10	COIL	**C20**	IGNITION MODULE	**C30**	ELECTRONIC IGNITION KIT	**E01**	IGNITION CABLE SET		

The present application list is a brief version. For the detailed information about the possibility of installation on a specific vehicle, please refer to our web-catalogue http://catalogo.facet.eu/

Vehicle	alim.	kW	Date	Engine	FUNCTIONS ON THE VEHICLE A10	A20	A40	A50	A70	C10 - C30	C20	E01
2.0 [CHN]	Petrol	85	04/07->	BXX.								

Engine	Information	A10	A20	A40	A50	A70	C10 - C30		C20	E01
All engines							9.8120	C30		4.9585

Vehicle	alim.	kW	Date	Engine	FUNCTIONS ON THE VEHICLE A10	A20	A40	A50	A70	C10 - C30	C20	E01
2.0 [CHN]	Petrol	88	06/08->	CGZA.								

Engine	Information	A10	A20	A40	A50	A70	C10 - C30		C20	E01
All engines							9.8120	C30		4.9585

Vehicle	alim.	kW	Date	Engine	FUNCTIONS ON THE VEHICLE A10	A20	A40	A50	A70	C10 - C30	C20	E01
2.0 4x4	Petrol	147	11/08->	CCZA								

Engine	Information	A10	A20	A40	A50	A70	C10 - C30		C20	E01
All engines	Qty: 4						9.6326	C10		

Vehicle	alim.	kW	Date	Engine	FUNCTIONS ON THE VEHICLE A10	A20	A40	A50	A70	C10 - C30	C20	E01
2.0 FSI	Petrol	110	11/04-10/08	BLR, BLY, BVY, BVZ								

Engine	Information	A10	A20	A40	A50	A70	C10 - C30		C20	E01
All engines	x 4, ELDOR, Housing Colour:Black, COIL ON PLUG, incl. spark plug connector						9.6326	C10		

Vehicle	alim.	kW	Date	Engine	FUNCTIONS ON THE VEHICLE A10	A20	A40	A50	A70	C10 - C30	C20	E01
2.0 FSI 4x4	Petrol	110	11/04-04/09	BLX, BLY, BVX								

Engine	Information	A10	A20	A40	A50	A70	C10 - C30		C20	E01
All engines	x 4, ELDOR, Housing Colour:Black, COIL ON PLUG, incl. spark plug connector						9.6326	C10		

Vehicle	alim.	kW	Date	Engine	FUNCTIONS ON THE VEHICLE A10	A20	A40	A50	A70	C10 - C30	C20	E01
2.0 TFSI	Petrol	147	10/05-02/13	BWA, CCZA								

Engine	Information	A10	A20	A40	A50	A70	C10 - C30		C20	E01
All engines	x 4, ELDOR, Housing Colour:Black, COIL ON PLUG, incl. spark plug connector						9.6326	C10		

OCTAVIA III

Vehicle	alim.	kW	Date	Engine	FUNCTIONS ON THE VEHICLE A10	A20	A40	A50	A70	C10 - C30	C20	E01
1.0 TSI	Petrol	85	05/16->	CHZD, DKRA, DKRF								

Engine	Information	A10	A20	A40	A50	A70	C10 - C30		C20	E01
All engines	x 3, BERU, ELDOR, COIL ON PLUG, incl. spark plug connector, Number of pins:4, incl. spark plug connector						9.6499	C10		

Vehicle	alim.	kW	Date	Engine	FUNCTIONS ON THE VEHICLE A10	A20	A40	A50	A70	C10 - C30	C20	E01
1.2 TSI	Petrol	63	11/12->	CJZB, CYVA								

Engine	Information	A10	A20	A40	A50	A70	C10 - C30		C20	E01
All engines	x 4, BERU, ELDOR, COIL ON PLUG, incl. spark plug connector, Number of pins:4, incl. spark plug connector						9.6499	C10		
Eng. CYVA	Qty: 4						9.6499	C10		

Vehicle	alim.	kW	Date	Engine	FUNCTIONS ON THE VEHICLE A10	A20	A40	A50	A70	C10 - C30	C20	E01
1.2 TSI	Petrol	77	11/12->	CJZA								

Engine	Information	A10	A20	A40	A50	A70	C10 - C30		C20	E01
All engines	x 4, BERU, ELDOR, COIL ON PLUG, incl. spark plug connector, Number of pins:4, incl. spark plug connector						9.6499	C10		

Vehicle	alim.	kW	Date	Engine	FUNCTIONS ON THE VEHICLE A10	A20	A40	A50	A70	C10 - C30	C20	E01
1.2 TSI	Petrol	81	05/15-02/17	CYVB								

Engine	Information	A10	A20	A40	A50	A70	C10 - C30		C20	E01
All engines	x 4, BERU, ELDOR, COIL ON PLUG, incl. spark plug connector, Number of pins:4, incl. spark plug connector						9.6499	C10		

Vehicle	alim.	kW	Date	Engine	FUNCTIONS ON THE VEHICLE A10	A20	A40	A50	A70	C10 - C30	C20	E01
1.4 TSI	Petrol	103	11/12->	CHPA								

Engine	Information	A10	A20	A40	A50	A70	C10 - C30		C20	E01
All engines	x 4, BERU, ELDOR, COIL ON PLUG, incl. spark plug connector, Number of pins:4, incl. spark plug connector						9.6499	C10		

Vehicle	alim.	kW	Date	Engine	FUNCTIONS ON THE VEHICLE A10	A20	A40	A50	A70	C10 - C30	C20	E01
1.4 TSI	Petrol	110	08/14-10/20	CHPB, CZDA								

Engine	Information	A10	A20	A40	A50	A70	C10 - C30		C20	E01
All engines	x 4, BERU, x 4, COIL ON PLUG, ELDOR, COIL ON PLUG, incl. spark plug connector, Number of pins:4, incl. spark plug connector						9.6499	C10		

A10	CONDENSER	A20	CONTACT SET	A40	DISTRIBUTOR CAP	A50	ROTOR	A70	PICK-UP
C10	COIL	C20	IGNITION MODULE	C30	ELECTRONIC IGNITION KIT	E01	IGNITION CABLE SET		

The present application list is a brief version. For the detailed information about the possibility of installation on a specific vehicle, please refer to our web-catalogue http://catalogo.facet.eu/

Vehicle	alim.	kW	Date	Engine	FUNCTIONS ON THE VEHICLE A10	A20	A40	A50	A70	C10 - C30	C20	E01
1.4 TSI G-TEC	Petrol/ Compressed Natural Gas (CNG)	81	11/13->	CPWA								

Engine	Information	A10	A20	A40	A50	A70	C10 - C30		C20	E01
All engines	x 4, BERU, ELDOR, COIL ON PLUG, incl. spark plug connector, Number of pins:4, incl. spark plug connector						9.6499	C10		

1.6	Petrol	81	01/14->	CWVA

Engine	Information	A10	A20	A40	A50	A70	C10 - C30		C20	E01
All engines	x 4, BERU, ELDOR, COIL ON PLUG, incl. spark plug connector, Number of pins:4, incl. spark plug connector						9.6499	C10		

1.8 TSI	Petrol	132	11/12->	CJSA, CJSB

Engine	Information	A10	A20	A40	A50	A70	C10 - C30		C20	E01
All engines	x 4, HITACHI, COIL ON PLUG, incl. spark plug connector						9.6536	C10		

1.8 TSI 4x4	Petrol	132	11/12->	CJSA, CJSB

Engine	Information	A10	A20	A40	A50	A70	C10 - C30		C20	E01
Eng. CJSA	Qty: 4, Qty: 4						9.6536	C10		
Eng. CJSB	x 4, HITACHI, COIL ON PLUG, incl. spark plug connector						9.6536	C10		

2.0 TSI	Petrol	140	02/17->	DKZA

Engine	Information	A10	A20	A40	A50	A70	C10 - C30		C20	E01
All engines	x 4, ELDOR, Colour:Black, COIL ON PLUG, incl. spark plug connector						9.6536	C10		

2.0 TSI 4x4	Petrol	140	02/19->	DKZA

Engine	Information	A10	A20	A40	A50	A70	C10 - C30		C20	E01
All engines	x 4, ELDOR, Colour:Black, COIL ON PLUG, incl. spark plug connector						9.6536	C10		

OCTAVIA IV

1.0 TSI	Petrol	81	06/20->	DLAA

Engine	Information	A10	A20	A40	A50	A70	C10 - C30		C20	E01
All engines	x 3, ELDOR, HITACHI, COIL ON PLUG, incl. spark plug connector, Number of pins:4, incl. spark plug connector						9.6499	C10		

1.0 TSI e-TEC	Petrol/ Electric	81	06/20->	DLAA

Engine	Information	A10	A20	A40	A50	A70	C10 - C30		C20	E01
All engines	x 3, ELDOR, HITACHI, COIL ON PLUG, incl. spark plug connector, Number of pins:4, incl. spark plug connector						9.6499	C10		

RAPID

1.0 TSI	Petrol	70	06/17-12/19	CHZB, DKLD

Engine	Information	A10	A20	A40	A50	A70	C10 - C30		C20	E01
All engines	x 3, BERU, ELDOR, COIL ON PLUG, incl. spark plug connector, Number of pins:4, incl. spark plug connector						9.6499	C10		

1.0 TSI	Petrol	81	06/17-12/19	CHZC

Engine	Information	A10	A20	A40	A50	A70	C10 - C30		C20	E01
All engines	x 3, BERU, ELDOR, COIL ON PLUG, incl. spark plug connector, Number of pins:4, incl. spark plug connector						9.6499	C10		

1.2	Petrol	55	07/12-06/15	CGPC

Engine	Information	A10	A20	A40	A50	A70	C10 - C30		C20	E01
All engines	x 3, COIL ON PLUG, incl. spark plug connector						9.6374	C10		

1.2 LPG	Petrol/ Liquified Petroleum Gas (LPG)	55	07/12-06/15	CGPC

Engine	Information	A10	A20	A40	A50	A70	C10 - C30		C20	E01
All engines	x 3, COIL ON PLUG, incl. spark plug connector						9.6374	C10		

A10	CONDENSER	A20	CONTACT SET	A40	DISTRIBUTOR CAP	A50	ROTOR	A70	PICK-UP
C10	COIL	C20	IGNITION MODULE	C30	ELECTRONIC IGNITION KIT	E01	IGNITION CABLE SET		

The present application list is a brief version. For the detailed information about the possibility of installation on a specific vehicle, please refer to our web-catalogue http://catalogo.facet.eu/

Vehicle	alim.	kW	Date	Engine	FUNCTIONS ON THE VEHICLE A10	A20	A40	A50	A70	C10 - C30	C20	E01
1.2 LPG	Petrol/ Liquified Petro-leum Gas (LPG)	63	07/12-05/15	ENGINE **CBZA**								
Engine: All engines	Information:									9.8120 C30		
1.2 TSI	Petrol	63	07/12-05/15	ENGINE **CBZA**								
Engine: All engines	Information:									9.8120 C30		
1.2 TSI	Petrol	66	05/15-12/19	ENGINE **CJZC**								
Engine: All engines	Information: x 4, BERU, ELDOR, COIL ON PLUG, incl. spark plug connector, Number of pins:4, incl. spark plug connector									9.6499 C10		
1.2 TSI	Petrol	77	07/12-05/15	ENGINE **CBZB**								
Engine: All engines	Information:									9.8120 C30		
1.2 TSI	Petrol	81	05/15-12/19	ENGINE **CJZD**								
Engine: All engines	Information: x 4, BERU, ELDOR, COIL ON PLUG, incl. spark plug connector, Number of pins:4, incl. spark plug connector									9.6499 C10		
1.4 TSI	Petrol	90	07/12-06/15	ENGINE **CAXA**								
Engine: All engines	Information: x 4, COIL ON PLUG, incl. spark plug connector									9.6374 C10		
1.4 TSI	Petrol	92	05/15->	ENGINE **CZCA**								
Engine: All engines	Information: x 4, BERU, ELDOR, COIL ON PLUG, incl. spark plug connector, Number of pins:4, incl. spark plug connector									9.6499 C10		
1.6	Petrol	77	07/12-06/15	ENGINE **CFNA**								
Engine: All engines	Information: x 4, COIL ON PLUG, incl. spark plug connector									9.6374 C10		
1.6	Petrol	81	05/15->	ENGINE **CWVA**								
Engine: All engines	Information: x 4, BERU, ELDOR, COIL ON PLUG, incl. spark plug connector, Number of pins:4, incl. spark plug connector									9.6499 C10		
1.6 SRE	Petrol	66	06/15->	ENGINE **CWVB**								
Engine: All engines	Information: x 4, BERU, ELDOR, COIL ON PLUG, incl. spark plug connector, Number of pins:4, incl. spark plug connector									9.6499 C10		
1.6 SRE	Petrol	81	05/15-12/19	ENGINE **CWVA**								
Engine: All engines	Information: x 4, BERU, ELDOR, COIL ON PLUG, incl. spark plug connector, Number of pins:4, incl. spark plug connector									9.6499 C10		
ROOMSTER												
1.2	Petrol	47	05/06-01/07	ENGINE **BME**								
Engine: All engines	Information: x 3, COIL ON PLUG, incl. spark plug connector									9.6374 C10		
1.2	Petrol	51	01/07-05/15	ENGINE **BZG, CGPA**								
Engine: All engines	Information: x 3, COIL ON PLUG, incl. spark plug connector									9.6374 C10		

A10	CONDENSER	**A20**	CONTACT SET	**A40**	DISTRIBUTOR CAP	**A50**	ROTOR	**A70**	PICK-UP
C10	COIL	**C20**	IGNITION MODULE	**C30**	ELECTRONIC IGNITION KIT	**E01**	IGNITION CABLE SET		

The present application list is a brief version. For the detailed information about the possibility of installation on a specific vehicle, please refer to our web-catalogue http://catalogo.facet.eu/

Vehicle	alim.	kW	Date	Engine	FUNCTIONS ON THE VEHICLE A10	A20	A40	A50	A70	C10 - C30	C20	E01
1.2 LPG	Petrol/ Liquified Petro-leum Gas (LPG)	51	03/09-05/15	CGPA								
Engine: All engines	Information: x 3, COIL ON PLUG, incl. spark plug connector									9.6374 C10		
1.2 TSI	Petrol	63	03/10-05/15	CBZA								
Engine: All engines										9.8120 C30		
1.2 TSI	Petrol	77	03/10-05/15	CBZB								
Engine: All engines										9.8120 C30		
1.4	Petrol	63	09/06-05/15	BXW, CGGB								
Engine: All engines	Information: x 4, COIL ON PLUG, incl. spark plug connector									9.6374 C10		
1.4 LPG	Petrol/ Liquified Petro-leum Gas (LPG)	63	03/10-05/15	BXW, CGGB								
Engine: All engines	Information: x 4, COIL ON PLUG, incl. spark plug connector									9.6374 C10		
1.6	Petrol	77	09/06-05/15	BTS, CFNA								
Engine: All engines	Information: x 4, COIL ON PLUG, incl. spark plug connector									9.6374 C10		
1.6 LPG	Petrol/ Liquified Petro-leum Gas (LPG)	77	06/06-07/10	BTS								
Engine: All engines	Information: x 4, COIL ON PLUG, incl. spark plug connector									9.6374 C10		
SCALA												
1.0 TGI CNG	Petrol/ Com-pressed Natural Gas (CNG)	66	11/19->	DBYA								
Engine: All engines	Information: x 3, BERU, ELDOR, COIL ON PLUG, incl. spark plug connec-tor, Number of pins:4, incl. spark plug connector									9.6499 C10		
1.0 TSI	Petrol	70	02/19->	DKLA, DLAC								
Engine: All engines	Information: x 3, BERU, ELDOR, COIL ON PLUG, incl. spark plug connec-tor, Number of pins:4, incl. spark plug connector									9.6499 C10		
1.0 TSI	Petrol	81	08/20->	DLAA								
Engine: All engines	Information: x 3, HITACHI, COIL ON PLUG, incl. spark plug connector									9.6499 C10		
1.0 TSI	Petrol	85	02/19->	DKJA, DKRF								
Engine: All engines	Information: x 3, BERU, ELDOR, COIL ON PLUG, incl. spark plug connec-tor, Number of pins:4, incl. spark plug connector									9.6499 C10		

A10	CONDENSER	A20	CONTACT SET	A40	DISTRIBUTOR CAP	A50	ROTOR	A70	PICK-UP
C10	COIL	C20	IGNITION MODULE	C30	ELECTRONIC IGNITION KIT	E01	IGNITION CABLE SET		

The present application list is a brief version. For the detailed information about the possibility of installation on a specific vehicle, please refer to our web-catalogue http://catalogo.facet.eu/

Vehicle	alim.	kW	Date	Engine	FUNCTIONS ON THE VEHICLE A10	A20	A40	A50	A70	C10 - C30	C20	E01
1.6 SRE	Petrol	81	02/19->	**CWVA**								

Engine	Information	A10	A20	A40	A50	A70	C10 - C30		C20	E01
All engines	x 4, BERU, x 4, COIL ON PLUG, ELDOR, COIL ON PLUG, incl. spark plug connector, incl. spark plug connector, Number of pins:4, incl. spark plug connector						9.6499	C10		

SUPERB I

1.8 T	Petrol	110	12/01-03/08	**AWT**

Engine	Information	A10	A20	A40	A50	A70	C10 - C30		C20	E01
All engines	x 4, COIL ON PLUG, incl. spark plug connector						9.6329	C10		

2.0	Petrol	85	12/01-03/08	**AZM**

Engine	Information	A10	A20	A40	A50	A70	C10 - C30		C20	E01
All engines							9.8120	C30		4.9585

SUPERB II

1.4 [CHN]	Petrol	96	03/10->	**CFBA.**

Engine	Information	A10	A20	A40	A50	A70	C10 - C30		C20	E01
All engines	Qty: 4						9.6374	C10		

1.4 TSI	Petrol	92	07/08-05/15	**CAXC**

Engine	Information	A10	A20	A40	A50	A70	C10 - C30		C20	E01
All engines	x 4, COIL ON PLUG, incl. spark plug connector						9.6374	C10		

1.8 TSI	Petrol	112	03/09-05/15	**CDAB**

Engine	Information	A10	A20	A40	A50	A70	C10 - C30		C20	E01
All engines	x 4, ELDOR, Housing Colour:Black, COIL ON PLUG, incl. spark plug connector						9.6326	C10		

1.8 TSI	Petrol	118	03/08-05/15	**BZB, CDAA**

Engine	Information	A10	A20	A40	A50	A70	C10 - C30		C20	E01
All engines	x 4, ELDOR, Housing Colour:Black, COIL ON PLUG, incl. spark plug connector						9.6326	C10		

1.8 TSI 4x4	Petrol	112	03/09-05/15	**CDAB**

Engine	Information	A10	A20	A40	A50	A70	C10 - C30		C20	E01
All engines	x 4, ELDOR, Housing Colour:Black, COIL ON PLUG, incl. spark plug connector						9.6326	C10		

1.8 TSI 4x4	Petrol	118	11/08-05/15	**CDAA**

Engine	Information	A10	A20	A40	A50	A70	C10 - C30		C20	E01
All engines	x 4, ELDOR, Housing Colour:Black, COIL ON PLUG, incl. spark plug connector						9.6326	C10		

2.0 TFSI	Petrol	147	05/10-05/15	**CCZA**

Engine	Information	A10	A20	A40	A50	A70	C10 - C30		C20	E01
All engines	x 4, ELDOR, Housing Colour:Black, COIL ON PLUG, incl. spark plug connector						9.6326	C10		

SUPERB III

1.4 TSI	Petrol	110	03/15->	**CZDA, CZEA**

Engine	Information	A10	A20	A40	A50	A70	C10 - C30		C20	E01
All engines	x 4, BERU, x 4, COIL ON PLUG, ELDOR, COIL ON PLUG, incl. spark plug connector, incl. spark plug connector, Number of pins:4, incl. spark plug connector						9.6499	C10		

1.4 TSI	Petrol	92	03/15->	**CZCA**

Engine	Information	A10	A20	A40	A50	A70	C10 - C30		C20	E01
All engines	x 4, BERU, ELDOR, COIL ON PLUG, incl. spark plug connector, Number of pins:4, incl. spark plug connector						9.6499	C10		

1.4 TSI 4x4	Petrol	110	03/15->	**CZDA, CZEA**

Engine	Information	A10	A20	A40	A50	A70	C10 - C30		C20	E01
Eng. CZDA	Qty: 4, version BERU, version ELDOR, Qty: 4						9.6499	C10		
Eng. CZEA	x 4, BERU, x 4, COIL ON PLUG, ELDOR, COIL ON PLUG, incl. spark plug connector, incl. spark plug connector, Number of pins:4, incl. spark plug connector						9.6499	C10		

A10	CONDENSER	**A20**	CONTACT SET	**A40**	DISTRIBUTOR CAP	**A50**	ROTOR	**A70**	PICK-UP
C10	COIL	**C20**	IGNITION MODULE	**C30**	ELECTRONIC IGNITION KIT	**E01**	IGNITION CABLE SET		

The present application list is a brief version. For the detailed information about the possibility of installation on a specific vehicle, please refer to our web-catalogue http://catalogo.facet.eu/

Vehicle	alim.	kW	Date	Engine	FUNCTIONS ON THE VEHICLE A10	A20	A40	A50	A70	C10 - C30	C20	E01
1.4 TSI iV	Petrol/ Electric	115	08/19->	DGEB								
Engine: All engines	Information: x 4, BERU, COIL ON PLUG, incl. spark plug connector									9.6499 C10		
1.4 TSI iV	Petrol/ Electric	160	08/19->	DGEB								
Engine: All engines	Information: x 4, BERU, COIL ON PLUG, incl. spark plug connector									9.6499 C10		
1.8 TSI	Petrol	132	03/15->	CJSA, CJSC								
Engine: All engines	Information: x 4, HITACHI, COIL ON PLUG, incl. spark plug connector									9.6536 C10		
YETI												
1.2 TSI	Petrol	77	09/09-05/15	CBZB								
Engine: All engines	Information: x 4, ELDOR, Housing Colour:Black, COIL ON PLUG, incl. spark plug connector									9.6326 C10		
All engines										9.8120 C30		4.7248
1.2 TSI	Petrol	81	05/15-12/17	CYVB								
Engine: All engines	Information: x 4, BERU, ELDOR, COIL ON PLUG, incl. spark plug connector, Number of pins:4, incl. spark plug connector									9.6499 C10		
1.4 TSI	Petrol	90	06/10-05/15	CAXA								
Engine: All engines	Information: x 4, COIL ON PLUG, incl. spark plug connector									9.6374 C10		
1.4 TSI	Petrol	92	05/15-12/17	CZCA								
Engine: All engines	Information: x 4, ELDOR, COIL ON PLUG, Number of pins:4, incl. spark plug connector									9.6499 C10		
1.4 TSI 4x4	Petrol	110	05/15-12/17	CZDA								
Engine: All engines	Information: x 4, ELDOR, COIL ON PLUG, Number of pins:4, incl. spark plug connector									9.6499 C10		
1.6	Petrol	81	04/14-12/17	CWVA								
Engine: All engines	Information: x 4, BERU, ELDOR, COIL ON PLUG, incl. spark plug connector, Number of pins:4, incl. spark plug connector									9.6499 C10		
1.8	Petrol	112	02/11->	CDAB								
Engine: All engines	Information: Qty: 4									9.6326 C10		
1.8 TSI 4x4	Petrol	112	11/09-12/17	CDAB								
Engine: All engines	Information: x 4, ELDOR, Housing Colour:Black, COIL ON PLUG, incl. spark plug connector									9.6326 C10		
1.8 TSI 4x4	Petrol	118	05/09-12/17	CDAA								
Engine: All engines	Information: x 4, ELDOR, Housing Colour:Black, COIL ON PLUG, incl. spark plug connector									9.6326 C10		

A10	CONDENSER	**A20**	CONTACT SET	**A40**	DISTRIBUTOR CAP	**A50**	ROTOR	**A70**	PICK-UP
C10	COIL	**C20**	IGNITION MODULE	**C30**	ELECTRONIC IGNITION KIT	**E01**	IGNITION CABLE SET		

The present application list is a brief version. For the detailed information about the possibility of installation on a specific vehicle, please refer to our web-catalogue http://catalogo.facet.eu/

Vehicle	alim.	kW	Date	Engine	FUNCTIONS ON THE VEHICLE A10	A20	A40	A50	A70	C10 - C30	C20	E01

CABRIO

				ENGINE
0.6	Petrol	40	03/00-01/04	M 160 E6AL B03, M 160.910, M 160.920

Engine	Information	A10	A20	A40	A50	A70	C10 - C30		C20	E01
Eng. M 160 E6AL B03, M 160.920	Qty: 3						9.6314	C10		
Eng. M 160.910	x 3, D.I.S.						9.6314	C10		
Eng. M 160 E6AL B03, M 160.920										4.9643

				ENGINE
0.6	Petrol	45	01/01-01/04	M 160 E6AL B05, M 160.910, M 160.920

Engine	Information	A10	A20	A40	A50	A70	C10 - C30		C20	E01
Eng. M 160 E6AL B05, M 160.920	Qty: 3						9.6314	C10		
Eng. M 160.910	x 3, D.I.S.						9.6314	C10		
All engines										4.9643

				ENGINE
0.6	Petrol	46	01/01-01/03	M 160.910

Engine	Information	A10	A20	A40	A50	A70	C10 - C30		C20	E01
All engines	x 3, D.I.S.						9.6314	C10		

				ENGINE
0.6	Petrol	52	06/02-01/04	M 160.910, M 160.920

Engine	Information	A10	A20	A40	A50	A70	C10 - C30		C20	E01
Eng. M 160.910	x 3, D.I.S.						9.6314	C10		
Eng. M 160.920	Qty: 3						9.6314	C10		
Eng. M 160.920										4.9643

				ENGINE
0.7	Petrol	45	01/03-01/04	M 160.910, M 160.920

Engine	Information	A10	A20	A40	A50	A70	C10 - C30		C20	E01
Eng. M 160.910	Qty: 3						9.6314	C10		
Eng. M 160.920	x 3, D.I.S.						9.6314	C10		
Eng. M 160.910										4.9643

				ENGINE
0.7	Petrol	55	01/03-01/04	M 160.910, M 160.920

Engine	Information	A10	A20	A40	A50	A70	C10 - C30		C20	E01
Eng. M 160.910	Qty: 3						9.6314	C10		
Eng. M 160.920	x 3, D.I.S.						9.6314	C10		
Eng. M 160.910										4.9643

CITY COUPE

				ENGINE
0.6	Petrol	34	12/99-04/03	M 160.910

Engine	Information	A10	A20	A40	A50	A70	C10 - C30		C20	E01
All engines	x 3, D.I.S.						9.6314	C10		

CITY-COUPE

				ENGINE
0.6	Petrol	33	07/98-01/04	M 160 E6AL B04, M 160.910, M 160.920

Engine	Information	A10	A20	A40	A50	A70	C10 - C30		C20	E01
Eng. M 160 E6AL B04, M 160.920	Qty: 3						9.6314	C10		
Eng. M 160.910	x 3, D.I.S.						9.6314	C10		
Eng. M 160 E6AL B04, M 160.920										4.9643

				ENGINE
0.6	Petrol	40	07/98-01/04	M 160 E6AL B03, M 160.910, M 160.920

Engine	Information	A10	A20	A40	A50	A70	C10 - C30		C20	E01
Eng. M 160 E6AL B03, M 160.920	Qty: 3						9.6314	C10		
Eng. M 160.910	x 3, D.I.S.						9.6314	C10		
Eng. M 160 E6AL B03, M 160.920										4.9643

A10	CONDENSER	A20	CONTACT SET	A40	DISTRIBUTOR CAP	A50	ROTOR	A70	PICK-UP
C10	COIL	C20	IGNITION MODULE	C30	ELECTRONIC IGNITION KIT	E01	IGNITION CABLE SET		

The present application list is a brief version. For the detailed information about the possibility of installation on a specific vehicle, please refer to our web-catalogue http://catalogo.facet.eu/

Vehicle	alim.	kW	Date	Engine	FUNCTIONS ON THE VEHICLE A10	A20	A40	A50	A70	C10 - C30	C20	E01
0.6	Petrol	45	01/01-01/04	ENGINE M 160 E6AL B05, M 160.910, M 160.920								
Engine	Information											
Eng. M 160 E6AL B05, M 160.920	Qty: 3									9.6314 C10		
Eng. M 160.910	x 3, D.I.S.									9.6314 C10		
Eng. M 160 E6AL B05, M 160.920												4.9643
0.6	Petrol	52	06/02-01/04	ENGINE M 160.910, M 160.920								
Engine	Information											
Eng. M 160.910	x 3, D.I.S.									9.6314 C10		
Eng. M 160.920	Qty: 3									9.6314 C10		
Eng. M 160.920												4.9643
0.7	Petrol	33	07/98-01/04	ENGINE M 160.910								
Engine	Information											
All engines	Qty: 3									9.6314 C10		
All engines												4.9643
0.7	Petrol	37	01/03-01/04	ENGINE M 160.910, M 160.920								
Engine	Information											
Eng. M 160.910	Qty: 3									9.6314 C10		
Eng. M 160.920	x 3, D.I.S.									9.6314 C10		
Eng. M 160.910												4.9643
0.7	Petrol	45	01/03-01/04	ENGINE M 160.910, M 160.920								
Engine	Information											
Eng. M 160.910	Qty: 3									9.6314 C10		
Eng. M 160.920	x 3, D.I.S.									9.6314 C10		
Eng. M 160.910												4.9643
0.7	Petrol	55	01/03-01/04	ENGINE M 160.910, M 160.920								
Engine	Information											
Eng. M 160.910	Qty: 3									9.6314 C10		
Eng. M 160.920	x 3, D.I.S.									9.6314 C10		
Eng. M 160.910												4.9643
CROSSBLADE												
0.6	Petrol	52	06/02-12/03	ENGINE M 160.910, M 160.920								
Engine	Information											
Eng. M 160.910	x 3, D.I.S.									9.6314 C10		
Eng. M 160.920	Qty: 3									9.6314 C10		
Eng. M 160.920												4.9643
FORFOUR III												
0.9	Petrol	66	11/14->	ENGINE M 281.910								
Engine	Information											
All engines	x 3, COIL ON PLUG									9.6513 C10		
0.9 Brabus	Petrol	80	07/16->	ENGINE M 281.910								
Engine	Information											
All engines	x 3, COIL ON PLUG									9.6513 C10		
1.0	Petrol	45	11/14->	ENGINE M 281.920								
Engine	Information											
All engines	x 3, COIL ON PLUG									9.6513 C10		
1.0	Petrol	52	07/14->	ENGINE M 281.920								
Engine	Information											
All engines	x 3, COIL ON PLUG									9.6513 C10		

A10	CONDENSER	A20	CONTACT SET	A40	DISTRIBUTOR CAP	A50	ROTOR	A70	PICK-UP
C10	COIL	C20	IGNITION MODULE	C30	ELECTRONIC IGNITION KIT	E01	IGNITION CABLE SET		

The present application list is a brief version. For the detailed information about the possibility of installation on a specific vehicle, please refer to our web-catalogue http://catalogo.facet.eu/

Vehicle	alim.	kW	Date	Engine	FUNCTIONS ON THE VEHICLE							
					A10	A20	A40	A50	A70	C10 - C30	C20	E01
FORTWO I												
				ENGINE								
0.6	Petrol	45	01/04-02/07	M 160.910								
Engine: All engines	Information: x 3, D.I.S.									9.6314 C10		
				ENGINE								
0.7	Petrol	37	01/04-01/07	M 160.910, M 160.920								
Engine: Eng. M 160.910	Information: Qty: 3									9.6314 C10		
Engine: Eng. M 160.920	Information: x 3, D.I.S.									9.6314 C10		
Engine: Eng. M 160.910	Information:											4.9643
				ENGINE								
0.7	Petrol	40	01/04-01/07	M 160.920								
Engine: All engines	Information: x 3, D.I.S.									9.6314 C10		
				ENGINE								
0.7	Petrol	45	01/04-01/07	M 160.910, M 160.920								
Engine: Eng. M 160.910	Information: Qty: 3									9.6314 C10		
Engine: Eng. M 160.920	Information: x 3, D.I.S.									9.6314 C10		
Engine: Eng. M 160.910	Information:											4.9643
				ENGINE								
0.7	Petrol	55	01/04-01/07	M 160.910, M 160.920								
Engine: Eng. M 160.910	Information: Qty: 3									9.6314 C10		
Engine: Eng. M 160.920	Information: x 3, D.I.S.									9.6314 C10		
Engine: Eng. M 160.910	Information:											4.9643
FORTWO II												
				ENGINE								
1.0	Petrol	45	01/07->	M 132.910								
Engine: All engines	Information: x 3, COIL ON PLUG									9.6403 C10		
				ENGINE								
1.0	Petrol	52	01/07->	M 132.910								
Engine: All engines	Information: x 3, COIL ON PLUG									9.6403 C10		
				ENGINE								
1.0 Brabus	Petrol	72	01/08->	M 132.930								
Engine: All engines	Information: x 3, COIL ON PLUG									9.6403 C10		
				ENGINE								
1.0 Brabus	Petrol	88	04/12->	M 132.930								
Engine: All engines	Information: x 3, COIL ON PLUG									9.6403 C10		
				ENGINE								
1.0 Turbo	Petrol	62	01/07->	M 132.930								
Engine: All engines	Information: x 3, COIL ON PLUG									9.6403 C10		
				ENGINE								
1.0 Turbo Brabus	Petrol	75	07/10->	M 132.930								
Engine: All engines	Information: x 3, COIL ON PLUG									9.6403 C10		
FORTWO III												
				ENGINE								
0.9	Petrol	66	09/14->	M 281.910								
Engine: All engines	Information: x 3, COIL ON PLUG									9.6513 C10		
				ENGINE								
0.9 Brabus	Petrol	80	07/16->	M 281.910								
Engine: All engines	Information: x 3, COIL ON PLUG									9.6513 C10		

A10	CONDENSER	A20	CONTACT SET	A40	DISTRIBUTOR CAP	A50	ROTOR	A70	PICK-UP
C10	COIL	C20	IGNITION MODULE	C30	ELECTRONIC IGNITION KIT	E01	IGNITION CABLE SET		

The present application list is a brief version. For the detailed information about the possibility of installation on a specific vehicle, please refer to our web-catalogue http://catalogo.facet.eu/

Vehicle	alim.	kW	Date	Engine	FUNCTIONS ON THE VEHICLE							
					A10	A20	A40	A50	A70	C10 - C30	C20	E01
				ENGINE								
1.0	Petrol	45	11/14->	M 281.920								
Engine	Information											
All engines	x 3, COIL ON PLUG									9.6513 C10		
				ENGINE								
1.0	Petrol	52	07/14->	M 281.920								
Engine	Information											
All engines	x 3, COIL ON PLUG									9.6513 C10		
ROADSTER												
				ENGINE								
0.7	Petrol	45	04/03-11/05	M 160.921, M 160.922								
Engine	Information											
All engines	x 3, D.I.S.									9.6314 C10		
All engines												4.9643
				ENGINE								
0.7	Petrol	60	04/03-11/05	M 160.921, M 160.922								
Engine	Information											
All engines	x 3, D.I.S.									9.6314 C10		
All engines												4.9643
				ENGINE								
0.7 Brabus	Petrol	74	12/03-11/05	M 160.923								
Engine	Information											
All engines	x 3, D.I.S.									9.6314 C10		
All engines												4.9643

A10	CONDENSER	A20	CONTACT SET	A40	DISTRIBUTOR CAP	A50	ROTOR	A70	PICK-UP
C10	COIL	C20	IGNITION MODULE	C30	ELECTRONIC IGNITION KIT	E01	IGNITION CABLE SET		

The present application list is a brief version. For the detailed information about the possibility of installation on a specific vehicle, please refer to our web-catalogue http://catalogo.facet.eu/

Vehicle	alim.	kW	Date	Engine	FUNCTIONS ON THE VEHICLE A10	A20	A40	A50	A70	C10 - C30	C20	E01

CHAIRMAN

				ENGINE
3.2	Petrol	165	07/11->	G32D

Engine	Information	A10	A20	A40	A50	A70	C10 - C30		C20	E01
All engines	x 3, SEMI-DIRECT						9.6216	C10		

KORANDO

				ENGINE
2.0	Petrol	94	05/97-10/02	E20, E20M160, E20M161, M111E20

Engine	Information	A10	A20	A40	A50	A70	C10 - C30		C20	E01
Eng. E20, M111E20	Qty: 2						9.6216	C10		
Eng. E20M160, E20M161	x 2, SEMI-DIRECT, x 2, SEMI-DIRECT						9.6216	C10		

				ENGINE
2.3	Petrol	103	05/97-02/00	--, E23, M 111.970, M111E23

Engine	Information	A10	A20	A40	A50	A70	C10 - C30		C20	E01
Eng. --, M 111.970, M111E23	Qty: 2						9.6216	C10		
Eng. E23	x 2, SEMI-DIRECT						9.6216	C10		

				ENGINE
2.3	Petrol	105	01/99-11/06	--, M111E23-143

Engine	Information	A10	A20	A40	A50	A70	C10 - C30		C20	E01
All engines	Qty: 2						9.6216	C10		

				ENGINE
3.2	Petrol	154	12/96-11/02	E32, M 104.995

Engine	Information	A10	A20	A40	A50	A70	C10 - C30		C20	E01
Eng. E32	x 3, SEMI-DIRECT, x 3, SEMI-DIRECT						9.6216	C10		
Eng. M 104.995	Qty: 3						9.6216	C10		

				ENGINE
3.2	Petrol	156	01/99-11/02	E32, M 104.995

Engine	Information	A10	A20	A40	A50	A70	C10 - C30		C20	E01
All engines	x 3, SEMI-DIRECT						9.6216	C10		
Eng. M 104.995	Qty: 3						9.6216	C10		

				ENGINE
3.2	Petrol	162	06/97-11/06	M 104.992

Engine	Information	A10	A20	A40	A50	A70	C10 - C30		C20	E01
All engines	Qty: 3						9.6216	C10		

KYRON

				ENGINE
3.2 M320 4x4	Petrol	162	03/08->	G32D

Engine	Information	A10	A20	A40	A50	A70	C10 - C30		C20	E01
All engines	x 3, SEMI-DIRECT						9.6216	C10		

MUSSO

				ENGINE
2.0	Petrol	93	10/96-05/05	E20, M111E20

Engine	Information	A10	A20	A40	A50	A70	C10 - C30		C20	E01
All engines	Qty: 2						9.6216	C10		

				ENGINE
3.2	Petrol	162	06/96-09/04	M 104.992

Engine	Information	A10	A20	A40	A50	A70	C10 - C30		C20	E01
All engines	Qty: 3						9.6216	C10		

REXTON I

				ENGINE
3.2 RX320 4x4	Petrol	162	04/02->	G32D

Engine	Information	A10	A20	A40	A50	A70	C10 - C30		C20	E01
All engines	x 3, SEMI-DIRECT						9.6216	C10		

RODIUS

				ENGINE
3.2	Petrol	162	05/05->	M162E32

Engine	Information	A10	A20	A40	A50	A70	C10 - C30		C20	E01
All engines	x 3, SEMI-DIRECT, x 3, SEMI-DIRECT, x 3, SEMI-DIRECT, x 3, SEMI-DIRECT						9.6216	C10		

A10	CONDENSER	A20	CONTACT SET	A40	DISTRIBUTOR CAP	A50	ROTOR	A70	PICK-UP
C10	COIL	C20	IGNITION MODULE	C30	ELECTRONIC IGNITION KIT	E01	IGNITION CABLE SET		

The present application list is a brief version. For the detailed information about the possibility of installation on a specific vehicle, please refer to our web-catalogue http://catalogo.facet.eu/

Vehicle	alim.	kW	Date	Engine	FUNCTIONS ON THE VEHICLE							
					A10	A20	A40	A50	A70	C10 - C30	C20	E01
				ENGINE								
3.2 4WD	Petrol	162	07/07->	G32D, M162E32								

Engine	Information	A10	A20	A40	A50	A70	C10 - C30		C20	E01
All engines	x 3, SEMI-DIRECT, x 3, SEMI-DIRECT, x 3, SEMI-DIRECT, x 3, SEMI-DIRECT						9.6216	C10		

A10	CONDENSER	A20	CONTACT SET	A40	DISTRIBUTOR CAP	A50	ROTOR	A70	PICK-UP
C10	COIL	C20	IGNITION MODULE	C30	ELECTRONIC IGNITION KIT	E01	IGNITION CABLE SET		

The present application list is a brief version. For the detailed information about the possibility of installation on a specific vehicle, please refer to our web-catalogue http://catalogo.facet.eu/

Vehicle	alim.	kW	Date	Engine	FUNCTIONS ON THE VEHICLE							
					A10	A20	A40	A50	A70	C10 - C30	C20	E01
FORESTER I												
2.0	Petrol	90	08/97-09/02	**EJ20J**								
Engine: All engines — Information:												4.9835
2.0 AWD	Petrol	90	08/97-09/02	**EJ202**								
Engine: All engines — Information: 01/05/00 ->, version HUNTER												4.9813
Engine: All engines — Information: version NA SPORT												4.9817
2.0 AWD	Petrol	92	06/98-09/02	**EJ202**								
Engine: All engines — Information: 01/05/00 ->, version HUNTER												4.9813
Engine: All engines — Information: version NA SPORT												4.9817
2.0 S Turbo AWD	Petrol	125	06/98-04/01	**EJ20**								
Engine: All engines — Information: ->year 31/08/00												4.9887
FORESTER II												
2.0 AWD	Petrol	92	06/02-05/05	**EJ20, EJ201**								
Engine: All engines — Information: no specific info conc. application available												4.9813
2.5	Petrol	123	02/02->	**EJ253**								
Engine: All engines — Information:												4.7106
2.5	Petrol	130	02/02->	**EJ251**								
Engine: All engines — Information:												4.9813
FORESTER III												
2.5	Petrol	126	01/08->	**EJ253**								
Engine: All engines — Information:												4.7106
IMPREZA I												
1.6	Petrol	66	01/93-12/00	**EJ16E**								
Engine: All engines — Information:										9.6165 C10		
Engine: All engines — Information: 01/12/93 ->												4.9835
1.6	Petrol	70	09/98-09/00	**EJ161**								
Engine: All engines — Information:												4.9819
1.6 i	Petrol	66	08/92-12/00	**8F 140 GA**								
Engine: All engines — Information:										9.6165 C10		
Engine: All engines — Information: 01/12/93 ->												4.9835
1.6 i	Petrol	70	06/98-12/00	**EJ161**								
Engine: All engines — Information:												4.9819
1.6 i AWD	Petrol	66	08/92-12/00	**8F 140 GA**								
Engine: All engines — Information:										9.6165 C10		
Engine: All engines — Information: 01/12/93 ->												4.9835

A10	CONDENSER	**A20**	CONTACT SET	**A40**	DISTRIBUTOR CAP	**A50**	ROTOR	**A70**	PICK-UP
C10	COIL	**C20**	IGNITION MODULE	**C30**	ELECTRONIC IGNITION KIT	**E01**	IGNITION CABLE SET		

The present application list is a brief version. For the detailed information about the possibility of installation on a specific vehicle, please refer to our web-catalogue http://catalogo.facet.eu/

Vehicle	alim.	kW	Date	Engine	FUNCTIONS ON THE VEHICLE							
					A10	A20	A40	A50	A70	C10 - C30	C20	E01
1.6 i AWD	Petrol	70	06/98-12/00	**EJ161**								4.9819
1.8	Petrol	76	01/93-10/95	**EJ18**						9.6165 C10		
All engines			01/12/93 ->									4.9835
1.8 i	Petrol	0	08/92-12/00	**EJ181**								4.9813
1.8 i	Petrol	76	11/95-06/96	**EJ18E**						9.6165 C10		4.9835
1.8 i AWD	Petrol	76	08/92-12/00	**EJ18, EJ18E**						9.6165 C10		
All engines			01/12/93 ->									4.9835
2.0	Petrol	85	09/96-08/98	**EJ20E**						9.6166 C10		
2.0	Petrol	92	09/98-09/00	**EJ201**								4.9813
2.0 AWD	Petrol	85	12/95-12/00	**EJ20E**						9.6166 C10		
2.0 i	Petrol	85	11/95-09/00	**EJ20E**						9.6166 C10		
2.0 i	Petrol	92	09/98-09/00	**EJ201**								4.9813
2.0 i 16V AWD	Petrol	92	06/98-12/00	**EJ20, EJ20E**								4.9813
2.0 i AWD	Petrol	85	10/95-12/00	**EJ20, EJ20E**						9.6166 C10		
2.0 i AWD	Petrol	92	06/98-12/00	**EJ201**								4.9813
2.0 i Turbo AWD	Petrol	155	03/94-12/00	**EJ20 (Turbo)**						9.6166 C10		

Engine	Information	A10	A20	A40	A50	A70	C10 - C30	C20	E01
All engines									4.9819
All engines							9.6165 C10		
All engines	01/12/93 ->								4.9835
All engines									4.9813
All engines							9.6165 C10		4.9835
All engines							9.6165 C10		
All engines	01/12/93 ->								4.9835
All engines							9.6166 C10		
All engines									4.9813
All engines							9.6166 C10		
All engines							9.6166 C10		
All engines									4.9813
All engines									4.9813
All engines							9.6166 C10		
All engines									4.9813
All engines	01/04/96 ->						9.6166 C10		

A10	CONDENSER	**A20**	CONTACT SET	**A40**	DISTRIBUTOR CAP	**A50**	ROTOR	**A70**	PICK-UP
C10	COIL	**C20**	IGNITION MODULE	**C30**	ELECTRONIC IGNITION KIT	**E01**	IGNITION CABLE SET		

The present application list is a brief version. For the detailed information about the possibility of installation on a specific vehicle, please refer to our web-catalogue http://catalogo.facet.eu/

Vehicle	alim.	kW	Date	Engine	FUNCTIONS ON THE VEHICLE A10	A20	A40	A50	A70	C10 - C30	C20	E01
2.0 Turbo AWD	Petrol	155	12/96-12/00	**EJ20G**								
All engines										9.6166 C10		
2.0 Turbo GT AWD	Petrol	155	03/94-12/00	**EJ20 (Turbo)**								
All engines			01/04/96 ->							9.6166 C10		
2.0 Turbo GT AWD	Petrol	160	06/98-12/00	**EJ205**								
All engines												4.9887
2.2 i	Petrol	0	11/93-08/98	**EJ22E, EJ22EZ**								
Eng. EJ22E			->year 30/06/96							9.6166 C10		
All engines			01/07/98 ->									4.9813
2.5 i	Petrol	0	11/93-08/98	**EJ253**								
All engines												4.9813
IMPREZA II												
1.6 AWD	Petrol	70	12/00-06/09	**8F 140 GA, EJ161**								
All engines												4.9819
2.0 AWD	Petrol	92	12/00-12/07	**EJ20**								
All engines												4.9813
2.0 i AWD	Petrol	92	12/00-06/09	**EJ201**								
All engines												4.9813
2.5 AWD	Petrol	112	12/02-09/05	**EJ25**								
All engines												4.9813
2.5 AWD	Petrol	130	03/01-09/05	**EJ251**								
All engines												4.9813
2.5 i AWD	Petrol	112	12/02-09/05	**EJ251**								
All engines												4.9813
J-SERIES												
1.0i EFC-SYS	Petrol	0	01/89->	--								
All engines			version Hitachi				2.7941	3.7973				
1.2i EFC-SYS	Petrol	0	01/89->	--								
All engines			version Hitachi				2.7941	3.7973				
JUSTY												
1.2i EMPI [USA]	Petrol	0	01/91->	--								
All engines			version Denso				2.7630/29	3.7629				

A10	CONDENSER	**A20**	CONTACT SET	**A40**	DISTRIBUTOR CAP	**A50**	ROTOR	**A70**	PICK-UP
C10	COIL	**C20**	IGNITION MODULE	**C30**	ELECTRONIC IGNITION KIT	**E01**	IGNITION CABLE SET		

The present application list is a brief version. For the detailed information about the possibility of installation on a specific vehicle, please refer to our web-catalogue http://catalogo.facet.eu/

Vehicle	alim.	kW	Date	Engine	FUNCTIONS ON THE VEHICLE							
					A10	A20	A40	A50	A70	C10 - C30	C20	E01

JUSTY II

				ENGINE
1.3 4x4	Petrol	63	04/01-11/03	G13BB

Engine	Information	A10	A20	A40	A50	A70	C10 - C30		C20	E01
All engines	Qty: 2						9.6470	C10		

				ENGINE
1.3i	Petrol	50	05/96-09/00	G13BA

Engine	Information	A10	A20	A40	A50	A70	C10 - C30		C20	E01
All engines	version Denso			2.7623	3.7628					

JUSTY III

				ENGINE
1.3 AWD	Petrol	69	09/03->	M13A

Engine	Information	A10	A20	A40	A50	A70	C10 - C30		C20	E01
All engines	Qty: 2						9.6470	C10		

				ENGINE
1.5 AWD	Petrol	73	09/03->	M15A

Engine	Information	A10	A20	A40	A50	A70	C10 - C30		C20	E01
All engines	Qty: 2						9.6470	C10		

LEGACY I

				ENGINE
1.6	Petrol	70	05/89-12/93	8F 140 GA

Engine	Information	A10	A20	A40	A50	A70	C10 - C30		C20	E01
All engines	version Mitsubishi			2.8322/45	3.8331/19					

				ENGINE
1.8i SPi	Petrol	0	01/89->	--

Engine	Information	A10	A20	A40	A50	A70	C10 - C30		C20	E01
All engines	version Hitachi			2.7975	3.7993					

				ENGINE
1800	Petrol	76	01/89-07/94	EJ18 SPI

Engine	Information	A10	A20	A40	A50	A70	C10 - C30		C20	E01
All engines	->year 31/12/91, version Hitachi			2.7975						
All engines	version Hitachi				3.7993					

				ENGINE
1800 4WD	Petrol	76	01/89-07/94	EJ18 SPI

Engine	Information	A10	A20	A40	A50	A70	C10 - C30		C20	E01
All engines	->year 31/12/91, version Hitachi			2.7975						
All engines	version Hitachi				3.7993					

				ENGINE
2.0	Petrol	85	08/91-12/93	EJ20E

Engine	Information	A10	A20	A40	A50	A70	C10 - C30		C20	E01
All engines							9.6165	C10		

				ENGINE
2.0i 16V	Petrol	85	08/91-12/93	EJ20E

Engine	Information	A10	A20	A40	A50	A70	C10 - C30		C20	E01
All engines							9.6165	C10		

				ENGINE
2.2i	Petrol	0	01/90->	--

Engine	Information	A10	A20	A40	A50	A70	C10 - C30		C20	E01
All engines	+automatic transmission, FOR: (USA)						9.6165	C10		
All engines	FOR: (EU), +manual transmission, FOR: (USA)						9.6166	C10		

				ENGINE
2.2i [USA]	Petrol	0	01/90->	--

Engine	Information	A10	A20	A40	A50	A70	C10 - C30		C20	E01
All engines	+automatic transmission, FOR: (USA)						9.6165	C10		
All engines	FOR: (EU), +manual transmission, FOR: (USA)						9.6166	C10		

				ENGINE
2.2i 16v	Petrol	100	08/89-10/91	EJ22E

Engine	Information	A10	A20	A40	A50	A70	C10 - C30		C20	E01
All engines							9.6165	C10		

A10	CONDENSER	A20	CONTACT SET	A40	DISTRIBUTOR CAP	A50	ROTOR	A70	PICK-UP
C10	COIL	C20	IGNITION MODULE	C30	ELECTRONIC IGNITION KIT	E01	IGNITION CABLE SET		

The present application list is a brief version. For the detailed information about the possibility of installation on a specific vehicle, please refer to our web-catalogue http://catalogo.facet.eu/

Vehicle	alim.	kW	Date	Engine	FUNCTIONS ON THE VEHICLE A10	A20	A40	A50	A70	C10 - C30	C20	E01
2.2i Turbo [USA]	Petrol	0	01/90->	--								

Engine	Information	A10	A20	A40	A50	A70	C10 - C30	C20	E01
All engines	+automatic transmission, FOR: (USA)						9.6165 C10		
All engines	FOR: (EU), +manual transmission, FOR: (USA)						9.6166 C10		

2000	Petrol	85	09/91-12/93	EJ20 EMPI

Engine	Information	A10	A20	A40	A50	A70	C10 - C30	C20	E01
All engines							9.6165 C10		

2000 4WD	Petrol	85	08/91-07/94	EJ20 EMPI

Engine	Information	A10	A20	A40	A50	A70	C10 - C30	C20	E01
All engines							9.6165 C10		

2200 4WD	Petrol	100	01/89-07/94	EJ22 EMPI

Engine	Information	A10	A20	A40	A50	A70	C10 - C30	C20	E01
All engines							9.6165 C10		

2200 Super 4WD	Petrol	100	01/89-07/94	EJ22 EMPI

Engine	Information	A10	A20	A40	A50	A70	C10 - C30	C20	E01
All engines							9.6165 C10		

LEGACY II

1.8 4WD	Petrol	76	05/96-09/98	EJ18E

Engine	Information	A10	A20	A40	A50	A70	C10 - C30	C20	E01
All engines	->year 31/05/96						9.6165 C10		
All engines	->year 31/05/96, 01/02/97 ->								4.9835

2.0 i	Petrol	85	09/94-03/99	EJ20 EMPI, EJ20E

Engine	Information	A10	A20	A40	A50	A70	C10 - C30	C20	E01
All engines							9.6166 C10		4.9835

2.0 i 4WD	Petrol	85	09/94-03/99	EJ201, EJ20E

Engine	Information	A10	A20	A40	A50	A70	C10 - C30	C20	E01
All engines							9.6166 C10		4.9835

2.2	Petrol	94	07/94-11/98	2LF479Q3

Engine	Information	A10	A20	A40	A50	A70	C10 - C30	C20	E01
All engines							9.6166 C10		

2.2 i 4WD	Petrol	94	02/94-03/99	EJ22 EMPI

Engine	Information	A10	A20	A40	A50	A70	C10 - C30	C20	E01
All engines							9.6166 C10		

2.2 i 4WD	Petrol	96	06/96-03/99	EJ22 EMPI

Engine	Information	A10	A20	A40	A50	A70	C10 - C30	C20	E01
All engines							9.6166 C10		

2.5	Petrol	110	01/96-12/99	EJ25D

Engine	Information	A10	A20	A40	A50	A70	C10 - C30	C20	E01
All engines							9.6166 C10		

2.5 i 4WD	Petrol	110	06/96-03/99	EJ25D

Engine	Information	A10	A20	A40	A50	A70	C10 - C30	C20	E01
All engines							9.6166 C10		

LEGACY III

2.0	Petrol	102	12/98-08/03	EJ201

Engine	Information	A10	A20	A40	A50	A70	C10 - C30	C20	E01
All engines									4.9813

A10	CONDENSER	A20	CONTACT SET	A40	DISTRIBUTOR CAP	A50	ROTOR	A70	PICK-UP
C10	COIL	C20	IGNITION MODULE	C30	ELECTRONIC IGNITION KIT	E01	IGNITION CABLE SET		

The present application list is a brief version. For the detailed information about the possibility of installation on a specific vehicle, please refer to our web-catalogue http://catalogo.facet.eu/

Vehicle	alim.	kW	Date	Engine	FUNCTIONS ON THE VEHICLE A10	A20	A40	A50	A70	C10 - C30	C20	E01
2.0	Petrol	92	12/98-08/03	EJ201								
Engine: All engines	Information:											4.9813
2.0 AWD	Petrol	92	12/98-08/03	EJ201								
Engine: All engines	Information:											4.9813
2.5	Petrol	115	10/98-08/03	EJ251								
Engine: All engines	Information:											4.9813
2.5 AWD	Petrol	115	10/98-08/03	EJ25								
Engine: All engines	Information:											4.9813
LEGACY IV												
2.0 AWD	Petrol	101	09/03-10/05	EJ202								
Engine: All engines	Information:											4.7100
2.5 AWD	Petrol	121	09/03-04/09	EJ25								
Engine: All engines	Information:											4.7106
2.5 i	Petrol	121	05/03->	EJ252, EJ253								
Engine: All engines	Information:											4.7106
2.5 i AWD	Petrol	127	09/07-12/09	EJ25								
Engine: All engines	Information:											4.7106
LOYALE												
1.8i SPi [USA]	Petrol	0	01/90->	--								
Engine: All engines	Information: version Hitachi						2.7946					
1.8i Turbo [USA]	Petrol	0	01/90->	--								
Engine: All engines	Information: version Hitachi						2.7946					
L-SERIES												
1.8i	Petrol	0	01/86-12/91	--								
Engine: All engines	Information: 01/01/87 ->, version Hitachi						2.7946					
Engine: All engines	Information: version Denso							3.7614				
1.8i TB	Petrol	0	01/86-12/91	--								
Engine: All engines	Information: 01/01/87 ->, version Hitachi						2.7946					
1.8i TB 4x4	Petrol	0	01/86-12/91	--								
Engine: All engines	Information: 01/01/87 ->, version Hitachi						2.7946					
1.8i Turbo	Petrol	0	01/86-12/91	--								
Engine: All engines	Information: 01/01/87 ->, version Hitachi						2.7946					

A10	CONDENSER	A20	CONTACT SET	A40	DISTRIBUTOR CAP	A50	ROTOR	A70	PICK-UP
C10	COIL	C20	IGNITION MODULE	C30	ELECTRONIC IGNITION KIT	E01	IGNITION CABLE SET		

The present application list is a brief version. For the detailed information about the possibility of installation on a specific vehicle, please refer to our web-catalogue http://catalogo.facet.eu/

Vehicle	alim.	kW	Date	Engine	FUNCTIONS ON THE VEHICLE							
					A10	A20	A40	A50	A70	C10 - C30	C20	E01

OUTBACK II

				ENGINE
2.5 AWD	Petrol	115	10/00-08/03	EJ25

Engine	Information	A10	A20	A40	A50	A70	C10 - C30	C20	E01
All engines									4.9813

OUTBACK III

				ENGINE
2.0	Petrol	101	09/03-10/05	EJ202

Engine	Information	A10	A20	A40	A50	A70	C10 - C30	C20	E01
All engines									4.7100

				ENGINE
2.0 AWD	Petrol	101	09/03-10/05	EJ202

Engine	Information	A10	A20	A40	A50	A70	C10 - C30	C20	E01
All engines									4.7100

				ENGINE
2.5	Petrol	121	09/08-09/09	EJ252, EJ253

Engine	Information	A10	A20	A40	A50	A70	C10 - C30	C20	E01
All engines									4.7106

TRENDY

				ENGINE
1.0	Petrol	40	08/86-05/95	EF10

Engine	Information	A10	A20	A40	A50	A70	C10 - C30	C20	E01
All engines	super unlead (95), version Hitachi			2.7941					
All engines	Super (98), version Hitachi			2.7948					
All engines	01/04/88 ->, super unlead (95), version Hitachi				3.7629				
All engines	->year 31/03/88, super unlead (95), version Hitachi				3.7973				

				ENGINE
1.2 12v	Petrol	49	06/86-08/95	EF12

Engine	Information	A10	A20	A40	A50	A70	C10 - C30	C20	E01
All engines	version Hitachi			2.7941	3.7973				

TREZIA

				ENGINE
1.3	Petrol	73	03/11->	1NR-FE

Engine	Information	A10	A20	A40	A50	A70	C10 - C30	C20	E01
All engines	x 4, COIL ON PLUG						9.6437 C10		

A10	CONDENSER	A20	CONTACT SET	A40	DISTRIBUTOR CAP	A50	ROTOR	A70	PICK-UP
C10	COIL	C20	IGNITION MODULE	C30	ELECTRONIC IGNITION KIT	E01	IGNITION CABLE SET		

The present application list is a brief version. For the detailed information about the possibility of installation on a specific vehicle, please refer to our web-catalogue http://catalogo.facet.eu/

Vehicle	alim.	kW	Date	Engine	FUNCTIONS ON THE VEHICLE							
					A10	A20	A40	A50	A70	C10 - C30	C20	E01
ALTO I												
				ENGINE								
0.8	Petrol	29	06/82-08/84	F8A, F8B								
Engine	Information											
All engines	version Denso					1.3511HDV	2.7607	3.7614				
ALTO IV												
				ENGINE								
1.0	Petrol	39	09/94-06/02	G10BB								
Engine	Information											
All engines	version Denso, no specific info conc. application available						2.7623	3.7628				
All engines	FOR: (EU), FOR: (AUS), version Denso, no specific info conc. application available						2.7630/26	3.7636				
All engines	petrol injection, no specific info conc. application available											4.7231
All engines	fuel formation: carburettor, no specific info conc. application available											4.9413
ALTO V												
				ENGINE								
1.0	Petrol	43	01/00-06/02	G10BB								
Engine	Information											
All engines	version Denso, no specific info conc. application available						2.7623	3.7628				
All engines	FOR: (EU), FOR: (AUS), version Denso, no specific info conc. application available						2.7630/26	3.7636				
All engines	petrol injection, no specific info conc. application available											4.7231
All engines	fuel formation: carburettor, no specific info conc. application available											4.9413
ALTO VI												
				ENGINE								
1.1	Petrol	46	09/04-12/08	6AR02150, F10D, F10DN								
Engine	Information											
Eng. F10D	Fitting Position:for cylinder 1, Fitting Position:for cylinder 4, x 2, SEMI-DIRECT									9.6435 C10		
Eng. F10DN	->ch. MA3FFB21S00280000, Qty: 2									9.6435 C10		
Eng. F10DN	ch. MA3FFB21S00280001 ->, Qty: 2									9.6470 C10		
Eng. 6AR02150, F10DN												4.7005
BALENO												
				ENGINE								
1.0	Petrol	82	02/16->	K10CT								
Engine	Information											
All engines	x 3, COIL ON PLUG									9.6521 C10		
				ENGINE								
1.2	Petrol	66	02/16->	K12C								
Engine	Information											
All engines	x 4, COIL ON PLUG									9.6521 C10		
				ENGINE								
1.2 Hybrid	Petrol/ Electric	66	02/16->	K12C								
Engine	Information											
All engines	x 4, COIL ON PLUG									9.6521 C10		
				ENGINE								
1.3 16V	Petrol	63	03/97-05/02	G13BB								
Engine	Information											
All engines	01/02/99 ->											4.7005
All engines	->year 31/01/99											4.9434
				ENGINE								
1.3 i 16V	Petrol	63	07/95-05/02	G13BB								
Engine	Information											
All engines	01/02/99 ->											4.7005
All engines	->year 31/01/99											4.9434
				ENGINE								
1.6	Petrol	71	07/96-01/99	G16B								
Engine	Information											
All engines	ch. 00160001 ->, x 2, SEMI-DIRECT									9.6435 C10		

A10	CONDENSER	A20	CONTACT SET	A40	DISTRIBUTOR CAP	A50	ROTOR	A70	PICK-UP
C10	COIL	C20	IGNITION MODULE	C30	ELECTRONIC IGNITION KIT	E01	IGNITION CABLE SET		

The present application list is a brief version. For the detailed information about the possibility of installation on a specific vehicle, please refer to our web-catalogue http://catalogo.facet.eu/

Vehicle	alim.	kW	Date	Engine	FUNCTIONS ON THE VEHICLE A10	A20	A40	A50	A70	C10 - C30	C20	E01
1.6 i 16V	Petrol	72	07/95-05/02	G16B								
All engines	ch. 00160001 ->, x 2, SEMI-DIRECT									9.6435 C10		
All engines	01/02/99 ->											4.7005
All engines	->year 31/01/99											4.9434
1.6 i 16V	Petrol	73	08/96-05/02	G16B								
All engines	ch. 00160001 ->, x 2, SEMI-DIRECT									9.6435 C10		
All engines	01/02/99 ->											4.7005
All engines	->year 31/01/99											4.9434
1.6 i 16V 4x4	Petrol	72	07/95-05/02	G16B								
All engines	ch. 00160001 ->, x 2, SEMI-DIRECT									9.6435 C10		
All engines	01/02/99 ->											4.7005
All engines	->year 31/01/99											4.9434
1.6 i 16V 4x4	Petrol	73	08/96-05/02	G16B								
All engines	ch. 00160001 ->, x 2, SEMI-DIRECT									9.6435 C10		
All engines	01/02/99 ->											4.7005
All engines	->year 31/01/99											4.9434
CARRY												
1.3	Petrol	56	02/99-09/04	G13BB								
All engines	x 2, SEMI-DIRECT									9.6435 C10		
1.3	Petrol	57	03/99-12/06	G13BB								
All engines	x 2, SEMI-DIRECT									9.6435 C10		
1.3	Petrol	58	03/99->	G13BB								
All engines												4.7005
1.3 16 V	Petrol	58	03/00->	G13BB								
All engines	x 2, SEMI-DIRECT									9.6435 C10		
All engines												4.7005
ESTEEM												
1.6i [USA]	Petrol	70	09/98->	G16B								
All engines	Qty: 2									9.6435 C10		
All engines												4.7005
GRAND VITARA I												
1.6 4x4	Petrol	69	03/98-07/03	G16B								
All engines	x 1, D.I.S.									9.6491 C10		
1.6 4x4	Petrol	71	09/03-09/05	G16B								
All engines	x 1, D.I.S.									9.6491 C10		
1.6 4x4	Petrol	73	02/00-09/02	G16B								
All engines												4.7005

A10	CONDENSER	A20	CONTACT SET	A40	DISTRIBUTOR CAP	A50	ROTOR	A70	PICK-UP
C10	COIL	C20	IGNITION MODULE	C30	ELECTRONIC IGNITION KIT	E01	IGNITION CABLE SET		

The present application list is a brief version. For the detailed information about the possibility of installation on a specific vehicle, please refer to our web-catalogue http://catalogo.facet.eu/

Vehicle	alim.	kW	Date	Engine	FUNCTIONS ON THE VEHICLE							
					A10	A20	A40	A50	A70	C10 - C30	C20	E01
GRAND VITARA II												
1.6	Petrol	78	10/05->	ENGINE M16A						9.6435 C10		
All engines				x 2, SEMI-DIRECT								
1.6 4x4	Petrol	73	09/05-02/15	ENGINE M16A						9.6435 C10		
All engines				Qty: 2								4.7013
1.6 Trazione integrale	Petrol	73	09/05-02/15	ENGINE M16A						9.6435 C10		
All engines				Fitting Position:for cylinder 2, Fitting Position:for cylinder 4, x 2, SEMI-DIRECT								
1.6 Trazione integrale	Petrol	78	04/05-02/15	ENGINE M16A						9.6435 C10		
All engines				x 2, SEMI-DIRECT								4.7013
IGNIS I												
1.3	Petrol	61	10/00-09/03	ENGINE M13A						9.6435 C10		
All engines				x 2, SEMI-DIRECT								4.7013
1.3 4WD	Petrol	61	10/00-09/03	ENGINE M13A						9.6435 C10		
All engines				x 2, SEMI-DIRECT								4.7013
1.5 Sport	Petrol	80	12/03-12/05	ENGINE M15A						9.6435 C10		
All engines				Fitting Position:for cylinder 1, Fitting Position:for cylinder 4, x 2, SEMI-DIRECT								4.7013
IGNIS II												
1.3	Petrol	69	09/03->	ENGINE M13A						9.6470 C10		
All engines				x 2, SEMI-DIRECT								4.7013
1.3 4x4	Petrol	69	09/03->	ENGINE M13A						9.6470 C10		
All engines				x 2, SEMI-DIRECT								4.7013
1.5	Petrol	73	09/03->	ENGINE M15A						9.6470 C10		
All engines				Fitting Position:for cylinder 1, Fitting Position:for cylinder 4, x 2, SEMI-DIRECT								4.7013
1.5 4x4	Petrol	73	09/03->	ENGINE M15A						9.6470 C10		
All engines				Fitting Position:for cylinder 1, Fitting Position:for cylinder 4, x 2, SEMI-DIRECT								4.7013

A10	CONDENSER	**A20**	CONTACT SET	**A40**	DISTRIBUTOR CAP	**A50**	ROTOR	**A70**	PICK-UP
C10	COIL	**C20**	IGNITION MODULE	**C30**	ELECTRONIC IGNITION KIT	**E01**	IGNITION CABLE SET		

The present application list is a brief version. For the detailed information about the possibility of installation on a specific vehicle, please refer to our web-catalogue http://catalogo.facet.eu/

Vehicle	alim.	kW	Date	Engine	FUNCTIONS ON THE VEHICLE A10	A20	A40	A50	A70	C10 - C30	C20	E01

IGNIS III

				ENGINE
1.2	Petrol	66	10/16->	K12C

Engine	Information	A10	A20	A40	A50	A70	C10 - C30		C20	E01
All engines	x 4, COIL ON PLUG						9.6521	C10		

				ENGINE
1.2 AllGrip	Petrol	66	10/16->	K12C

Engine	Information	A10	A20	A40	A50	A70	C10 - C30		C20	E01
All engines	x 4, COIL ON PLUG						9.6521	C10		

				ENGINE
1.2 Hybrid	Petrol/ Electric	66	10/16->	K12C

Engine	Information	A10	A20	A40	A50	A70	C10 - C30		C20	E01
All engines	x 4, COIL ON PLUG						9.6521	C10		

				ENGINE
1.2 Hybrid AllGrip	Petrol/ Electric	66	10/16->	K12C

Engine	Information	A10	A20	A40	A50	A70	C10 - C30		C20	E01
All engines	x 4, COIL ON PLUG						9.6521	C10		

JIMNY III

				ENGINE
1.3	Petrol	63	08/04->	M13A

Engine	Information	A10	A20	A40	A50	A70	C10 - C30		C20	E01
All engines	x 1, D.I.S.						9.6491	C10		

				ENGINE
1.3 16V	Petrol	59	09/98->	G13BB

Engine	Information	A10	A20	A40	A50	A70	C10 - C30		C20	E01
All engines	x 1, D.I.S.						9.6491	C10		
All engines										4.7005

				ENGINE
1.3 16V	Petrol	60	02/01->	M13A

Engine	Information	A10	A20	A40	A50	A70	C10 - C30		C20	E01
All engines	x 1, D.I.S.						9.6491	C10		
All engines										4.7013

				ENGINE
1.3 16V 4WD	Petrol	59	09/98->	G13BB

Engine	Information	A10	A20	A40	A50	A70	C10 - C30		C20	E01
All engines	x 1, D.I.S.						9.6491	C10		
All engines										4.7005

				ENGINE
1.3 16V 4WD	Petrol	60	02/01->	M13A

Engine	Information	A10	A20	A40	A50	A70	C10 - C30		C20	E01
All engines	x 1, D.I.S.						9.6491	C10		
All engines										4.7013

				ENGINE
1.3 16V 4x4	Petrol	63	08/05->	M13A

Engine	Information	A10	A20	A40	A50	A70	C10 - C30		C20	E01
All engines	x 1, D.I.S.						9.6491	C10		
All engines										4.7013

				ENGINE
1.3 4WD	Petrol	62	05/14->	M13A

Engine	Information	A10	A20	A40	A50	A70	C10 - C30		C20	E01
All engines	x 2, SEMI-DIRECT						9.6435	C10		
All engines										4.7013

				ENGINE
1.3 4WD	Petrol	63	03/13->	M13A

Engine	Information	A10	A20	A40	A50	A70	C10 - C30		C20	E01
All engines	x 2, SEMI-DIRECT						9.6435	C10		

				ENGINE
1.3 4x4	Petrol	63	09/98-08/00	G13BB

Engine	Information	A10	A20	A40	A50	A70	C10 - C30		C20	E01
All engines	Qty: 2						9.6491	C10		

A10	CONDENSER	A20	CONTACT SET	A40	DISTRIBUTOR CAP	A50	ROTOR	A70	PICK-UP
C10	COIL	C20	IGNITION MODULE	C30	ELECTRONIC IGNITION KIT	E01	IGNITION CABLE SET		

The present application list is a brief version. For the detailed information about the possibility of installation on a specific vehicle, please refer to our web-catalogue http://catalogo.facet.eu/

Vehicle	alim.	kW	Date	Engine	FUNCTIONS ON THE VEHICLE A10	A20	A40	A50	A70	C10 - C30	C20	E01
1.3 4x4	Petrol	63	09/98-08/00	G13BB								
Engine	Information											
All engines												4.7005
LIANA												
1.3	Petrol	66	07/01->	M13A								
Engine	Information											
All engines	x 2, SEMI-DIRECT									9.6435 C10		
All engines												4.7013
1.6	Petrol	76	07/01->	M16A								
Engine	Information											
All engines	x 2, SEMI-DIRECT									9.6435 C10		
All engines												4.7013
1.6	Petrol	79	01/05->	M16A								
Engine	Information											
All engines	x 2, SEMI-DIRECT									9.6435 C10		
All engines												4.7013
1.6 4WD	Petrol	76	07/01->	M16A								
Engine	Information											
All engines	x 2, SEMI-DIRECT									9.6435 C10		
All engines												4.7013
1.6 4WD	Petrol	78	04/02->	M16A								
Engine	Information											
All engines	x 2, SEMI-DIRECT									9.6435 C10		
All engines												4.7013
1.6 4WD	Petrol	79	01/05-12/07	M16A								
Engine	Information											
All engines	x 2, SEMI-DIRECT									9.6435 C10		
All engines												4.7013
1.6 i	Petrol	78	04/02->	M16A								
Engine	Information											
All engines	x 2, SEMI-DIRECT									9.6435 C10		
All engines												4.7013
1.8 i	Petrol	92	10/01->	M18A								
Engine	Information											
All engines	Qty: 2									9.6435 C10		
All engines												4.7013
SAMURAI												
1.3	Petrol	49	08/89-07/92	G13BA								
Engine	Information											
All engines	version Denso						2.7630/26	3.7636				
1.3	Petrol	52	11/88-03/98	G13BA								
Engine	Information											
All engines	version Denso						2.7630/26	3.7636				
1.3 Trazione integrale	Petrol	44	11/88-12/04	G13A								
Engine	Information											
All engines	version Denso						2.7593	3.7630				

A10	CONDENSER	A20	CONTACT SET	A40	DISTRIBUTOR CAP	A50	ROTOR	A70	PICK-UP
C10	COIL	C20	IGNITION MODULE	C30	ELECTRONIC IGNITION KIT	E01	IGNITION CABLE SET		

The present application list is a brief version. For the detailed information about the possibility of installation on a specific vehicle, please refer to our web-catalogue http://catalogo.facet.eu/

Vehicle	alim.	kW	Date	Engine	FUNCTIONS ON THE VEHICLE A10	A20	A40	A50	A70	C10 - C30	C20	E01
1.3 Trazione integrale	Petrol	47	11/88-12/04	**G13A**								

Engine	Information	A10	A20	A40	A50	A70	C10 - C30	C20	E01
All engines	version Denso			2.7630/26	3.7636				

Vehicle	alim.	kW	Date	Engine	FUNCTIONS ON THE VEHICLE A10	A20	A40	A50	A70	C10 - C30	C20	E01
1.3 Trazione integrale	Petrol	51	11/88-12/04	**G13BA**								

Engine	Information	A10	A20	A40	A50	A70	C10 - C30	C20	E01
All engines	version Denso			2.7630/26	3.7636				

Vehicle	alim.	kW	Date	Engine	FUNCTIONS ON THE VEHICLE A10	A20	A40	A50	A70	C10 - C30	C20	E01
1.3 Trazione integrale	Petrol	59	01/00-12/04	**G13BA**								

Engine	Information	A10	A20	A40	A50	A70	C10 - C30	C20	E01
All engines	version Denso			2.7630/26	3.7636				

SIDEKICK

Vehicle	alim.	kW	Date	Engine	FUNCTIONS ON THE VEHICLE A10	A20	A40	A50	A70	C10 - C30	C20	E01
1.6 JX 4x4	Petrol	59	04/89-04/96	**G16A (8V)**								

Engine	Information	A10	A20	A40	A50	A70	C10 - C30	C20	E01
All engines	version Denso			2.7623					
All engines							9.6101 C10		4.7004

Vehicle	alim.	kW	Date	Engine	FUNCTIONS ON THE VEHICLE A10	A20	A40	A50	A70	C10 - C30	C20	E01
1.6i [USA]	Petrol	0	01/89->	--								

Engine	Information	A10	A20	A40	A50	A70	C10 - C30	C20	E01
All engines	version Denso			2.7593	3.7630				
All engines	version Mitsubishi			2.8322/40	3.8331/31				
All engines	no specific info conc. application available								4.9415, 4.9417

Vehicle	alim.	kW	Date	Engine	FUNCTIONS ON THE VEHICLE A10	A20	A40	A50	A70	C10 - C30	C20	E01
1.6i 16V JLX 4x4	Petrol	71	04/89-04/96	**G16B**								

Engine	Information	A10	A20	A40	A50	A70	C10 - C30	C20	E01
All engines	version Denso			2.8322/44	3.8331/31				

Vehicle	alim.	kW	Date	Engine	FUNCTIONS ON THE VEHICLE A10	A20	A40	A50	A70	C10 - C30	C20	E01
1.6i 16V JX 4x4	Petrol	71	04/89-04/96	**G16B**								

Engine	Information	A10	A20	A40	A50	A70	C10 - C30	C20	E01
All engines	version Denso			2.7623					
All engines							9.6101 C10		

SJ410

Vehicle	alim.	kW	Date	Engine	FUNCTIONS ON THE VEHICLE A10	A20	A40	A50	A70	C10 - C30	C20	E01
1.0	Petrol	33	09/81-07/91	**F10A**								

Engine	Information	A10	A20	A40	A50	A70	C10 - C30	C20	E01
All engines	version Denso		1.3511HDV		3.7614				
All engines	01/01/84 ->, version Denso			2.7593					
All engines	RHD								4.7020
All engines	LHD								4.9413

SJ413

Vehicle	alim.	kW	Date	Engine	FUNCTIONS ON THE VEHICLE A10	A20	A40	A50	A70	C10 - C30	C20	E01
1.3	Petrol	47	09/84-08/90	**G13A**								

Engine	Information	A10	A20	A40	A50	A70	C10 - C30	C20	E01
All engines	version Denso			2.7593	3.7630				
All engines									4.7020

SUPER CARRY

Vehicle	alim.	kW	Date	Engine	FUNCTIONS ON THE VEHICLE A10	A20	A40	A50	A70	C10 - C30	C20	E01
1.0	Petrol	30	09/94-03/99	**F10A**								

Engine	Information	A10	A20	A40	A50	A70	C10 - C30	C20	E01
All engines	version Denso		1.3511HDV	2.7593	3.7630				

Vehicle	alim.	kW	Date	Engine	FUNCTIONS ON THE VEHICLE A10	A20	A40	A50	A70	C10 - C30	C20	E01
1.0	Petrol	31	10/92-03/99	**F10A**								

Engine	Information	A10	A20	A40	A50	A70	C10 - C30	C20	E01
All engines	version Denso		1.3511HDV	2.7593	3.7630				

A10	CONDENSER	**A20**	CONTACT SET	**A40**	DISTRIBUTOR CAP	**A50**	ROTOR	**A70**	PICK-UP
C10	COIL	**C20**	IGNITION MODULE	**C30**	ELECTRONIC IGNITION KIT	**E01**	IGNITION CABLE SET		

The present application list is a brief version. For the detailed information about the possibility of installation on a specific vehicle, please refer to our web-catalogue http://catalogo.facet.eu/

Vehicle	alim.	kW	Date	Engine	FUNCTIONS ON THE VEHICLE A10	A20	A40	A50	A70	C10 - C30	C20	E01
1.0	Petrol	33	10/85-03/99	F10A								
Engine: All engines	Information: version Denso					1.3511HDV	2.7593	3.7630				
SWIFT I / II												
1.0	Petrol	37	10/83-03/89	G10, G10A								
Engine: All engines	Information: version Denso							3.7630				
1.3 GTi/GXi	Petrol	74	08/85-03/89	G13B								
Engine: All engines	Information: version Hitachi						2.7946					
SWIFT I / II / III												
1.0	Petrol	37	03/89-05/01	G10A								
Engine: All engines	Information: version Denso							3.7630				
1.0 i	Petrol	39	03/89-12/05	G10, G10A								
Engine: All engines	Information: version Denso						2.7630/15	3.7634				
1.0 i	Petrol	40	03/89-12/91	G10A								
Engine: All engines	Information: version Denso							3.7630				
1.3	Petrol	50	03/89-05/01	G13A								
Engine: All engines	Information: version Denso						2.7623	3.7628				
1.3	Petrol	51	03/89-10/96	G13BA								
Engine: All engines	Information: version Denso						2.7623	3.7628				
Engine: All engines	Information:											4.9413
1.3	Petrol	52	03/89-12/91	G13A, G13B								
Engine: All engines	Information: version Denso						2.7623	3.7628				
1.3 4WD	Petrol	50	03/89-05/01	G13A								
Engine: All engines	Information: version Denso						2.7623	3.7628				
1.3 4WD	Petrol	52	10/89-12/91	G13A								
Engine: All engines	Information: version Denso						2.7623	3.7628				
1.3 GTi	Petrol	74	03/89-05/01	G13B								
Engine: All engines	Information: version Hitachi						2.7946					
1.3 GTi DOHC	Petrol	74	10/89-12/95	G13B								
Engine: All engines	Information: version Hitachi						2.7946					
1.3 GTi SOHC	Petrol	50	10/89-12/95	G13B								
Engine: All engines	Information: version Denso						2.7623	3.7628				
Engine: All engines	Information: version Mitsubishi						2.8322/32	3.8331/8				
Engine: All engines	Information: version TYPE 1											4.9413

A10	CONDENSER	A20	CONTACT SET	A40	DISTRIBUTOR CAP	A50	ROTOR	A70	PICK-UP
C10	COIL	C20	IGNITION MODULE	C30	ELECTRONIC IGNITION KIT	E01	IGNITION CABLE SET		

The present application list is a brief version. For the detailed information about the possibility of installation on a specific vehicle, please refer to our web-catalogue http://catalogo.facet.eu/

Vehicle	alim.	kW	Date	Engine	FUNCTIONS ON THE VEHICLE							
					A10	A20	A40	A50	A70	C10 - C30	C20	E01
1.3 i	Petrol	50	09/91-10/96	**G13BA**								
				ENGINE								
All engines	version Denso						2.7623	3.7628				
All engines												4.9413
1.3i SOHC [USA]	Petrol	0	01/89-12/94	--								
				ENGINE								
All engines	version Denso						2.7623	3.7628				
1.6	Petrol	70	11/89-12/91	**G16B**								
				ENGINE								
All engines	version Mitsubishi						2.8322/32	3.8331/8				
1.6 4WD	Petrol	70	11/89-12/91	**G16B**								
				ENGINE								
All engines	version Mitsubishi						2.8322/32	3.8331/8				
1.6 i 16V	Petrol	72	08/92-10/96	**G16BA**								
				ENGINE								
All engines	version Denso						2.7623	3.7628				
1.6 i 16V 4x4	Petrol	72	08/92-10/96	**G16BA**								
				ENGINE								
All engines	version Denso						2.7623	3.7628				
SWIFT III												
1.3 [USA]	Petrol	0	06/95-05/01	--								
				ENGINE								
All engines	->year 01/12/97, version Denso						2.7623	3.7628				
All engines	01/01/99 ->, Qty: 2									9.6491 C10		
All engines	01/01/99 ->											4.7005
1.3 i	Petrol	49	06/96-03/01	**G13BA**								
				ENGINE								
All engines	version Denso						2.7623	3.7628				
All engines												4.9413
SWIFT IV												
1.3	Petrol	67	02/05-06/15	**M13A**								
				ENGINE								
All engines	Qty: 2									9.6470 C10		
All engines												4.7013
1.3	Petrol	68	02/05->	**M13A**								
				ENGINE								
All engines	x 2, SEMI-DIRECT									9.6435 C10		
All engines	MADE BY: (H), x 2, SEMI-DIRECT									9.6470 C10		
All engines												4.7013
1.3 4x4	Petrol	66	01/06->	**M13A**								
				ENGINE								
All engines	x 2, SEMI-DIRECT									9.6435 C10		
All engines	MADE BY: (H), x 2, SEMI-DIRECT									9.6470 C10		
All engines												4.7013
1.3 4x4	Petrol	68	02/05->	**M13A**								
				ENGINE								
All engines	x 2, SEMI-DIRECT									9.6435 C10		
All engines	MADE BY: (H), x 2, SEMI-DIRECT									9.6470 C10		
All engines												4.7013

A10	CONDENSER	**A20**	CONTACT SET	**A40**	DISTRIBUTOR CAP	**A50**	ROTOR	**A70**	PICK-UP
C10	COIL	**C20**	IGNITION MODULE	**C30**	ELECTRONIC IGNITION KIT	**E01**	IGNITION CABLE SET		

The present application list is a brief version. For the detailed information about the possibility of installation on a specific vehicle, please refer to our web-catalogue http://catalogo.facet.eu/

Vehicle	alim.	kW	Date	Engine	FUNCTIONS ON THE VEHICLE A10	A20	A40	A50	A70	C10 - C30	C20	E01
1.3 LPG	Petrol/ Liquified Petro-leum Gas (LPG)	68	09/08-12/10	ENGINE **M13A**								
Engine: All engines	Information: x 2, SEMI-DIRECT									9.6435 C10		
Engine: All engines	Information: MADE BY: (H), x 2, SEMI-DIRECT									9.6470 C10		
1.5	Petrol	75	02/05->	ENGINE **M15A**								
Engine: All engines	Information: x 2, SEMI-DIRECT									9.6435 C10		
Engine: All engines	Information: MADE BY: (H), x 2, SEMI-DIRECT									9.6470 C10		
Engine: All engines	Information:											4.7013
1.5 4x4	Petrol	74	02/05->	ENGINE **M15A**								
Engine: All engines	Information: Qty: 2									9.6435 C10		
Engine: All engines	Information:											4.7013
1.6	Petrol	92	05/06->	ENGINE **M16A**								
Engine: All engines	Information: x 2, SEMI-DIRECT									9.6435 C10		
Engine: All engines	Information: MADE BY: (H), x 2, SEMI-DIRECT									9.6470 C10		
Engine: All engines	Information:											4.7013
1.6 4x4	Petrol	92	02/05->	ENGINE **M16A**								
Engine: All engines	Information: Qty: 2									9.6435 C10		
Engine: All engines	Information:											4.7013
SWIFT V												
1.2	Petrol	67	08/12->	ENGINE **K12B**								
Engine: All engines	Information: Qty: 4									9.6521 C10		
1.2 4WD	Petrol	67	08/12->	ENGINE **K12B**								
Engine: All engines	Information: Qty: 4									9.6521 C10		
SWIFT VI												
1.0	Petrol	82	04/17->	ENGINE **K10C**								
Engine: All engines	Information: x 3, COIL ON PLUG									9.6521 C10		
1.0 SHVS	Petrol/ Electric	82	04/17->	ENGINE **K10C**								
Engine: All engines	Information: x 3, COIL ON PLUG									9.6521 C10		
1.2	Petrol	66	04/17->	ENGINE **K12C**								
Engine: All engines	Information: x 4, COIL ON PLUG									9.6521 C10		
1.2 AllGrip	Petrol	66	04/17->	ENGINE **K12C**								
Engine: All engines	Information: x 4, COIL ON PLUG									9.6521 C10		
1.2 SHVS	Petrol/ Electric	66	04/17->	ENGINE **K12C**								
Engine: All engines	Information: x 4, COIL ON PLUG									9.6521 C10		

A10	CONDENSER	**A20**	CONTACT SET	**A40**	DISTRIBUTOR CAP	**A50**	ROTOR	**A70**	PICK-UP
C10	COIL	**C20**	IGNITION MODULE	**C30**	ELECTRONIC IGNITION KIT	**E01**	IGNITION CABLE SET		

The present application list is a brief version. For the detailed information about the possibility of installation on a specific vehicle, please refer to our web-catalogue http://catalogo.facet.eu/

Vehicle	alim.	kW	Date	Engine	FUNCTIONS ON THE VEHICLE A10	A20	A40	A50	A70	C10 - C30	C20	E01
1.2 SHVS AllGrip	Petrol/ Electric	66	04/17->	K12C						9.6521 C10		

Engine	Information	A10	A20	A40	A50	A70	C10 - C30	C20	E01
All engines	x 4, COIL ON PLUG						9.6521 C10		

1.4 Sport	Petrol	103	09/17->	K14C

Engine	Information	A10	A20	A40	A50	A70	C10 - C30	C20	E01
All engines	x 4, COIL ON PLUG						9.6521 C10		

SX4 I

1.5	Petrol	73	06/06-07/10	M15A

Engine	Information	A10	A20	A40	A50	A70	C10 - C30	C20	E01
All engines	x 2, SEMI-DIRECT						9.6435 C10		
All engines	->ch. TSMEYA11S00449999, MADE BY: (H), x 2, SEMI-DIRECT						9.6470 C10		
All engines	version TYPE 1, 2								4.7013

1.5 VVT	Petrol	82	07/10->	M15A

Engine	Information	A10	A20	A40	A50	A70	C10 - C30	C20	E01
All engines	x 2, SEMI-DIRECT						9.6435 C10		
All engines	->ch. TSMEYA11S00449999, MADE BY: (H), x 2, SEMI-DIRECT						9.6470 C10		
All engines	version TYPE 1, 2								4.7013

1.5 VVT 4x4	Petrol	82	07/10->	M15A

Engine	Information	A10	A20	A40	A50	A70	C10 - C30	C20	E01
All engines	x 2, SEMI-DIRECT						9.6435 C10		
All engines	->ch. TSMEYA11S00449999, MADE BY: (H), x 2, SEMI-DIRECT						9.6470 C10		
All engines	version TYPE 1, 2								4.7013

1.5 VVTi	Petrol	81	07/07-12/15	M15A

Engine	Information	A10	A20	A40	A50	A70	C10 - C30	C20	E01
All engines	x 2, SEMI-DIRECT						9.6435 C10		
All engines	->ch. TSMEYA11S00449999, MADE BY: (H), x 2, SEMI-DIRECT						9.6470 C10		

1.6	Petrol	74	06/06->	M16A

Engine	Information	A10	A20	A40	A50	A70	C10 - C30	C20	E01
All engines	ch. JSA, Qty: 2						9.6435 C10		
All engines	Qty: 2, version TYPE 1, 2						9.6470 C10		
All engines	version TYPE 1, 2								4.7013

1.6	Petrol	75	10/07->	M16A

Engine	Information	A10	A20	A40	A50	A70	C10 - C30	C20	E01
All engines	ch. JSA, Qty: 2						9.6435 C10		
All engines									4.7013

1.6	Petrol	79	10/07->	M16A

Engine	Information	A10	A20	A40	A50	A70	C10 - C30	C20	E01
All engines	Fitting Position:for cylinder 2, Fitting Position:for cylinder 4, ->ch. JSAGYB41S00300000, x 2, SEMI-DIRECT						9.6435 C10		
All engines	Fitting Position:for cylinder 2, Fitting Position:for cylinder 4, ->ch. TSMEYB21S00450000, ->ch. TSMEYB21S00460000, ->ch. TSMEYB21S00470000, ->ch. TSMEYB21S00490000, ->ch. TSMEYB21S00510000, ->ch. TSMEYB21S00530000, ->ch. TSMEYB21S00560000, ->ch. TSMEYB21S00630000, ->ch. TSMEYB21S00680000, MADE BY: (H), x 2, SEMI-DIRECT						9.6470 C10		
All engines									4.7013

1.6	Petrol	88	10/07->	M16A

Engine	Information	A10	A20	A40	A50	A70	C10 - C30	C20	E01
All engines	Fitting Position:for cylinder 2, Fitting Position:for cylinder 4, ->ch. JSAGYB41S00300000, x 2, SEMI-DIRECT						9.6435 C10		

A10	CONDENSER	A20	CONTACT SET	A40	DISTRIBUTOR CAP	A50	ROTOR	A70	PICK-UP
C10	COIL	C20	IGNITION MODULE	C30	ELECTRONIC IGNITION KIT	E01	IGNITION CABLE SET		

The present application list is a brief version. For the detailed information about the possibility of installation on a specific vehicle, please refer to our web-catalogue http://catalogo.facet.eu/

Vehicle	alim.	kW	Date	Engine	FUNCTIONS ON THE VEHICLE A10	A20	A40	A50	A70	C10 - C30	C20	E01
1.6	Petrol	88	10/07->	M16A								

Engine	Information	A10	A20	A40	A50	A70	C10 - C30		C20	E01
All engines	Fitting Position:for cylinder 2, Fitting Position:for cylinder 4, ->ch. TSMEYB21S00450000, ->ch. TSMEYB21S00460000, ->ch. TSMEYB21S00470000, ->ch. TSMEYB21S00490000, ->ch. TSMEYB21S00510000, ->ch. TSMEYB21S00530000, ->ch. TSMEYB21S00560000, ->ch. TSMEYB21S00630000, ->ch. TSMEYB21S00680000, MADE BY: (H), x 2, SEMI-DIRECT						9.6470	C10		
All engines										4.7013

1.6 AWD	Petrol	79	10/07-12/11	M16A

Engine	Information	A10	A20	A40	A50	A70	C10 - C30		C20	E01
All engines	Fitting Position:for cylinder 2, Fitting Position:for cylinder 4, ->ch. JSAGYB41S00300000, x 2, SEMI-DIRECT						9.6435	C10		
All engines	Fitting Position:for cylinder 2, Fitting Position:for cylinder 4, ->ch. TSMEYB21S00450000, ->ch. TSMEYB21S00460000, ->ch. TSMEYB21S00470000, ->ch. TSMEYB21S00490000, ->ch. TSMEYB21S00510000, ->ch. TSMEYB21S00530000, ->ch. TSMEYB21S00560000, ->ch. TSMEYB21S00630000, ->ch. TSMEYB21S00680000, MADE BY: (H), x 2, SEMI-DIRECT						9.6470	C10		
All engines										4.7013

1.6 AWD	Petrol	88	10/07->	M16A

Engine	Information	A10	A20	A40	A50	A70	C10 - C30		C20	E01
All engines	ch. JSA, Qty: 2						9.6435	C10		
All engines										4.7013

1.6 LPG	Petrol/ Liquified Petro-leum Gas (LPG)	79	06/06-12/12	M16A

Engine	Information	A10	A20	A40	A50	A70	C10 - C30		C20	E01
All engines	Fitting Position:for cylinder 2, Fitting Position:for cylinder 4, ->ch. JSAGYB21S0030000, ->ch. JSAGYC21S0030000, x 2, SEMI-DIRECT						9.6435	C10		

1.6 VVT	Petrol	79	06/06->	M16A

Engine	Information	A10	A20	A40	A50	A70	C10 - C30		C20	E01
All engines	Fitting Position:for cylinder 2, Fitting Position:for cylinder 4, ->ch. JSAGYB41S00300000, x 2, SEMI-DIRECT						9.6435	C10		
All engines	Fitting Position:for cylinder 2, Fitting Position:for cylinder 4, ->ch. TSMEYB21S00450000, ->ch. TSMEYB21S00460000, ->ch. TSMEYB21S00470000, ->ch. TSMEYB21S00490000, ->ch. TSMEYB21S00510000, ->ch. TSMEYB21S00530000, ->ch. TSMEYB21S00560000, ->ch. TSMEYB21S00630000, ->ch. TSMEYB21S00680000, MADE BY: (H), x 2, SEMI-DIRECT						9.6470	C10		
All engines	version TYPE 1, 2									4.7013

1.6 VVT	Petrol	82	11/10-12/15	M16A

Engine	Information	A10	A20	A40	A50	A70	C10 - C30		C20	E01
All engines	Fitting Position:for cylinder 2, Fitting Position:for cylinder 4, ->ch. JSAGYB41S00300000, x 2, SEMI-DIRECT						9.6435	C10		
All engines	Fitting Position:for cylinder 2, Fitting Position:for cylinder 4, ->ch. TSMEYB21S00450000, ->ch. TSMEYB21S00460000, ->ch. TSMEYB21S00470000, ->ch. TSMEYB21S00490000, ->ch. TSMEYB21S00510000, ->ch. TSMEYB21S00530000, ->ch. TSMEYB21S00560000, ->ch. TSMEYB21S00630000, ->ch. TSMEYB21S00680000, MADE BY: (H), x 2, SEMI-DIRECT						9.6470	C10		

1.6 VVT	Petrol	88	07/09->	M16A

Engine	Information	A10	A20	A40	A50	A70	C10 - C30		C20	E01
All engines	Fitting Position:for cylinder 2, Fitting Position:for cylinder 4, ->ch. JSAGYB41S00300000, x 2, SEMI-DIRECT						9.6435	C10		
All engines	Fitting Position:for cylinder 2, Fitting Position:for cylinder 4, ->ch. TSMEYB21S00450000, ->ch. TSMEYB21S00460000, ->ch. TSMEYB21S00470000, ->ch. TSMEYB21S00490000, ->ch. TSMEYB21S00510000, ->ch. TSMEYB21S00530000, ->ch. TSMEYB21S00560000, ->ch. TSMEYB21S00630000, ->ch. TSMEYB21S00680000, MADE BY: (H), x 2, SEMI-DIRECT						9.6470	C10		
All engines	version TYPE 1, 2									4.7013

A10	CONDENSER	A20	CONTACT SET	A40	DISTRIBUTOR CAP	A50	ROTOR	A70	PICK-UP
C10	COIL	C20	IGNITION MODULE	C30	ELECTRONIC IGNITION KIT	E01	IGNITION CABLE SET		

The present application list is a brief version. For the detailed information about the possibility of installation on a specific vehicle, please refer to our web-catalogue http://catalogo.facet.eu/

Vehicle	alim.	kW	Date	Engine	FUNCTIONS ON THE VEHICLE: A10	A20	A40	A50	A70	C10 - C30	C20	E01
1.6 VVT 4x4	Petrol	79	06/06->	**M16A**								

Engine	Information	A10	A20	A40	A50	A70	C10 - C30		C20	E01
All engines	Fitting Position:for cylinder 2, Fitting Position:for cylinder 4, ->ch. JSAGYB41S00300000, x 2, SEMI-DIRECT						9.6435	C10		
All engines	Fitting Position:for cylinder 2, Fitting Position:for cylinder 4, ->ch. TSMEYB21S00450000, ->ch. TSMEYB21S00460000, ->ch. TSMEYB21S00470000, ->ch. TSMEYB21S00490000, ->ch. TSMEYB21S00510000, ->ch. TSMEYB21S00530000, ->ch. TSMEYB21S00560000, ->ch. TSMEYB21S00630000, ->ch. TSMEYB21S00680000, MADE BY: (H), x 2, SEMI-DIRECT						9.6470	C10		
All engines	version TYPE 1, 2									4.7013

1.6 VVT 4x4	Petrol	82	07/09->	**M16A**	

Engine	Information	A10	A20	A40	A50	A70	C10 - C30		C20	E01
All engines	Fitting Position:for cylinder 2, Fitting Position:for cylinder 4, ->ch. JSAGYB41S00300000, x 2, SEMI-DIRECT						9.6435	C10		
All engines	Fitting Position:for cylinder 2, Fitting Position:for cylinder 4, ->ch. TSMEYB21S00450000, ->ch. TSMEYB21S00460000, ->ch. TSMEYB21S00470000, ->ch. TSMEYB21S00490000, ->ch. TSMEYB21S00510000, ->ch. TSMEYB21S00530000, ->ch. TSMEYB21S00560000, ->ch. TSMEYB21S00630000, ->ch. TSMEYB21S00680000, MADE BY: (H), x 2, SEMI-DIRECT						9.6470	C10		
All engines	version TYPE 1, 2									4.7013

1.6 VVT 4x4	Petrol	88	07/09->	**M16A**	

Engine	Information	A10	A20	A40	A50	A70	C10 - C30		C20	E01
All engines	Fitting Position:for cylinder 2, Fitting Position:for cylinder 4, ->ch. JSAGYB41S00300000, x 2, SEMI-DIRECT						9.6435	C10		
All engines	Fitting Position:for cylinder 2, Fitting Position:for cylinder 4, ->ch. TSMEYB21S00450000, ->ch. TSMEYB21S00460000, ->ch. TSMEYB21S00470000, ->ch. TSMEYB21S00490000, ->ch. TSMEYB21S00510000, ->ch. TSMEYB21S00530000, ->ch. TSMEYB21S00560000, ->ch. TSMEYB21S00630000, ->ch. TSMEYB21S00680000, MADE BY: (H), x 2, SEMI-DIRECT						9.6470	C10		
All engines	version TYPE 1, 2									4.7013

SX4 II

1.0	Petrol	82	08/16->	**K10C**	

Engine	Information	A10	A20	A40	A50	A70	C10 - C30		C20	E01
All engines	x 3, COIL ON PLUG						9.6521	C10		

1.0 AllGrip	Petrol	82	08/16->	**K10C**	

Engine	Information	A10	A20	A40	A50	A70	C10 - C30		C20	E01
All engines	x 3, COIL ON PLUG						9.6521	C10		

1.4 T	Petrol	103	08/16->	**K14C**	

Engine	Information	A10	A20	A40	A50	A70	C10 - C30		C20	E01
All engines	x 4, COIL ON PLUG						9.6521	C10		

1.4 T AllGrip	Petrol	103	08/16->	**K14C**	

Engine	Information	A10	A20	A40	A50	A70	C10 - C30		C20	E01
All engines	x 4, COIL ON PLUG						9.6521	C10		

VITARA I

1.6	Petrol	55	01/90-12/93	**G16A (8V)**	

Engine	Information	A10	A20	A40	A50	A70	C10 - C30		C20	E01
All engines	version Denso			2.7623						
All engines							9.6101	C10		4.7004

1.6	Petrol	59	07/88-01/95	**G16A (8V)**	

Engine	Information	A10	A20	A40	A50	A70	C10 - C30		C20	E01
All engines	version Denso			2.7623						
All engines							9.6101	C10		4.7004

1.6	Petrol	70	02/91-03/98	**G16B**	

Engine	Information	A10	A20	A40	A50	A70	C10 - C30		C20	E01
All engines	version Denso			2.7623						

A10	CONDENSER	**A20**	CONTACT SET	**A40**	DISTRIBUTOR CAP	**A50**	ROTOR	**A70**	PICK-UP
C10	COIL	**C20**	IGNITION MODULE	**C30**	ELECTRONIC IGNITION KIT	**E01**	IGNITION CABLE SET		

The present application list is a brief version. For the detailed information about the possibility of installation on a specific vehicle, please refer to our web-catalogue http://catalogo.facet.eu/

Vehicle	alim.	kW	Date	Engine	FUNCTIONS ON THE VEHICLE A10	A20	A40	A50	A70	C10 - C30	C20	E01
1.6	Petrol	70	02/91-03/98	**G16B**								
All engines										9.6101 C10		4.7004
1.6 8V	Petrol	0	01/95-12/98	**G16A (8V)**								
All engines	fuel formation: carburettor, version Denso						2.7593	3.7630				
All engines	petrol injection, version Mitsubishi						2.8322/40	3.8331/31				
1.6 16V	Petrol	69	10/99-10/02	**G16B**								
All engines	Qty: 2									9.6491 C10		
All engines												4.7005
1.6 i 16V	Petrol	71	07/90-03/99	**G16B**								
All engines	version Denso						2.7623					
All engines										9.6101 C10		4.7004
1.6 i 16V Trazione integrale	Petrol	71	07/90-03/98	**G16B**								
All engines	version Denso						2.7623					
All engines										9.6101 C10		4.7004
1.6 Trazione integrale	Petrol	59	07/88-03/98	**G16A (8V)**								
All engines	version Denso						2.7623					
All engines										9.6101 C10		4.7004
1.6 Trazione integrale	Petrol	60	07/88-12/95	**G16A (8V)**								
All engines	version Denso						2.7623					
All engines										9.6101 C10		4.7004
VITARA II												
1.6i [USA]	Petrol	0	08/99-12/06	--								
All engines	Qty: 2									9.6491 C10		
All engines												4.7005
VITARA IV												
1.0	Petrol	82	10/18->	**K10C**								
All engines	x 3, COIL ON PLUG									9.6521 C10		
1.0 AllGrip	Petrol	82	10/18->	**K10C**								
All engines	x 3, COIL ON PLUG									9.6521 C10		
1.4 T	Petrol	103	09/15->	**K14C**								
All engines	x 4, COIL ON PLUG									9.6521 C10		
1.4 T AllGrip	Petrol	103	09/15->	**K14C**								
All engines	x 4, COIL ON PLUG									9.6521 C10		

A10	CONDENSER	**A20**	CONTACT SET	**A40**	DISTRIBUTOR CAP	**A50**	ROTOR	**A70**	PICK-UP
C10	COIL	**C20**	IGNITION MODULE	**C30**	ELECTRONIC IGNITION KIT	**E01**	IGNITION CABLE SET		

The present application list is a brief version. For the detailed information about the possibility of installation on a specific vehicle, please refer to our web-catalogue http://catalogo.facet.eu/

Vehicle	alim.	kW	Date	Engine	FUNCTIONS ON THE VEHICLE A10	A20	A40	A50	A70	C10 - C30	C20	E01

WAGON R II

				ENGINE
1.0	Petrol	48	02/98-05/00	K10A

Engine	Information	A10	A20	A40	A50	A70	C10 - C30	C20	E01
All engines	version Hitachi				3.7973				
All engines									4.7028

				ENGINE
1.2	Petrol	51	02/98-05/00	K12A

Engine	Information	A10	A20	A40	A50	A70	C10 - C30	C20	E01
All engines	version Hitachi				3.7973				
All engines									4.7028

				ENGINE
1.2 4WD	Petrol	51	02/98-05/00	K12A

Engine	Information	A10	A20	A40	A50	A70	C10 - C30	C20	E01
All engines	version Hitachi				3.7973				
All engines									4.7028

				ENGINE
1.3	Petrol	56	04/99-10/00	G13BB

Engine	Information	A10	A20	A40	A50	A70	C10 - C30	C20	E01
All engines	->ch. 157570, x 2, SEMI-DIRECT						9.6435 C10		
All engines	ch. 157571 ->, x 2, SEMI-DIRECT						9.6470 C10		

WAGON R III

				ENGINE
1.0	Petrol	44	06/04-08/05	Z 10 XEP

Engine	Information	A10	A20	A40	A50	A70	C10 - C30	C20	E01
All engines	version Denso			2.7630/15	3.7634				

				ENGINE
1.3	Petrol	65	09/03-12/10	M13A

Engine	Information	A10	A20	A40	A50	A70	C10 - C30	C20	E01
All engines	x 2, SEMI-DIRECT						9.6470 C10		

WAGON R+ II

				ENGINE
1.0	Petrol	51	08/00-07/03	K10A

Engine	Information	A10	A20	A40	A50	A70	C10 - C30	C20	E01
All engines	version Denso			2.7630/15	3.7634				

				ENGINE
1.0 XT Plus	Petrol	74	08/00-07/01	--

Engine	Information	A10	A20	A40	A50	A70	C10 - C30	C20	E01
All engines	version Denso			2.7630/15	3.7634				

				ENGINE
1.3	Petrol	56	05/00-12/04	G13BB

Engine	Information	A10	A20	A40	A50	A70	C10 - C30	C20	E01
All engines	->ch. 157570, x 2, SEMI-DIRECT						9.6435 C10		
All engines	ch. 157571 ->, x 2, SEMI-DIRECT						9.6470 C10		
All engines									4.7005

				ENGINE
1.3	Petrol	65	08/01->	M13A

Engine	Information	A10	A20	A40	A50	A70	C10 - C30	C20	E01
All engines	Qty: 2						9.6435 C10		
All engines									4.7005

				ENGINE
1.3	Petrol	69	09/03->	M13A

Engine	Information	A10	A20	A40	A50	A70	C10 - C30	C20	E01
All engines	x 2, SEMI-DIRECT						9.6470 C10		
All engines									4.7013

				ENGINE
1.3 4WD	Petrol	56	10/01->	G13BB

Engine	Information	A10	A20	A40	A50	A70	C10 - C30	C20	E01
All engines	x 2, SEMI-DIRECT						9.6470 C10		
All engines									4.7005

A10	CONDENSER	A20	CONTACT SET	A40	DISTRIBUTOR CAP	A50	ROTOR	A70	PICK-UP
C10	COIL	C20	IGNITION MODULE	C30	ELECTRONIC IGNITION KIT	E01	IGNITION CABLE SET		

The present application list is a brief version. For the detailed information about the possibility of installation on a specific vehicle, please refer to our web-catalogue http://catalogo.facet.eu/

Vehicle	alim.	kW	Date	Engine	FUNCTIONS ON THE VEHICLE							
					A10	A20	A40	A50	A70	C10 - C30	C20	E01
				ENGINE								
1.3 4WD	Petrol	69	09/03->	M13A								
Engine	Information											
All engines	x 2, SEMI-DIRECT									9.6470 C10		
All engines												4.7013
X-90												
				ENGINE								
1.6 i 16V	Petrol	71	09/95-12/97	G16B								
Engine	Information											
All engines	version Denso							3.8331/36				
				ENGINE								
1.6 i 16V 4x4	Petrol	71	09/95-12/97	G16B								
Engine	Information											
All engines	version Denso							3.8331/36				

A10	CONDENSER	A20	CONTACT SET	A40	DISTRIBUTOR CAP	A50	ROTOR	A70	PICK-UP
C10	COIL	C20	IGNITION MODULE	C30	ELECTRONIC IGNITION KIT	E01	IGNITION CABLE SET		

The present application list is a brief version. For the detailed information about the possibility of installation on a specific vehicle, please refer to our web-catalogue http://catalogo.facet.eu/

Vehicle	alim.	kW	Date	Engine	FUNCTIONS ON THE VEHICLE							
					A10	A20	A40	A50	A70	C10 - C30	C20	E01

1307-1510

				ENGINE
Simca 1307 1.3	Petrol	44	09/75-01/80	--

Engine	Information	A10	A20	A40	A50	A70	C10 - C30	C20	E01
All engines	version Bosch			2.7479PHT	3.7525RS				

				ENGINE
Simca 1307 1.3	Petrol	50	07/75-01/80	--

Engine	Information	A10	A20	A40	A50	A70	C10 - C30	C20	E01
All engines	version Bosch			2.7479PHT	3.7525RS				
All engines	version Ducellier			2.7654PHT	3.7691				

AVENGER

				ENGINE
1.3	Petrol	44	02/70-07/81	--

Engine	Information	A10	A20	A40	A50	A70	C10 - C30	C20	E01
All engines				2.8075	3.7590, 3.8106				

				ENGINE
1.6	Petrol	51	02/70-07/81	--

Engine	Information	A10	A20	A40	A50	A70	C10 - C30	C20	E01
All engines				2.8075	3.7590, 3.8106				

				ENGINE
1.6	Petrol	59	02/70-07/81	--

Engine	Information	A10	A20	A40	A50	A70	C10 - C30	C20	E01
All engines				2.8075	3.7590, 3.8106				

MATRA BAGHEERA

				ENGINE
1.3	Petrol	62	01/74-03/78	3G4

Engine	Information	A10	A20	A40	A50	A70	C10 - C30	C20	E01
All engines			1.3691/11U						

SAMBA

				ENGINE
1.1	Petrol	37	01/81-06/86	XW7

Engine	Information	A10	A20	A40	A50	A70	C10 - C30	C20	E01
All engines	version Ducellier	0.0334	1.3691/3	2.7658PHT	3.7688				

SOLARA

				ENGINE
1.3	Petrol	40	02/80-07/86	2M 102.979

Engine	Information	A10	A20	A40	A50	A70	C10 - C30	C20	E01
All engines	version Bosch			2.7479PHT	3.7525RS				
All engines	version Ducellier			2.7654PHT	3.7694				

TAGORA

				ENGINE
2.1	Petrol	85	06/80-12/83	5N2

Engine	Information	A10	A20	A40	A50	A70	C10 - C30	C20	E01
All engines	version Bosch			2.7479PHT	3.7561RS	8.2653			
All engines	version Ducellier			2.7654PHT	3.7694				
All engines							9.6001D C10		

				ENGINE
2.6	Petrol	122	08/81-10/83	9L6

Engine	Information	A10	A20	A40	A50	A70	C10 - C30	C20	E01
All engines	version Bosch				3.7549RS				

A10	CONDENSER	A20	CONTACT SET	A40	DISTRIBUTOR CAP	A50	ROTOR	A70	PICK-UP
C10	COIL	C20	IGNITION MODULE	C30	ELECTRONIC IGNITION KIT	E01	IGNITION CABLE SET		

The present application list is a brief version. For the detailed information about the possibility of installation on a specific vehicle, please refer to our web-catalogue http://catalogo.facet.eu/

Vehicle	alim.	kW	Date	Engine	FUNCTIONS ON THE VEHICLE							
					A10	A20	A40	A50	A70	C10 - C30	C20	E01
4 RUNNER												
2.4	Petrol	84	08/88-11/95	22RE						9.6103 C10		
Engine: All engines — Information: 01/08/92 ->												
2.4 i [USA]	Petrol	0	01/88-12/93	22RE								
Engine: All engines — Information: ->year 01/12/92, version Denso							2.7599					
Engine: All engines — Information: 01/12/92 ->, version Denso							2.7630/43					
Engine: All engines — Information: 01/01/92 ->										9.6103 C10		
2.7 16V	Petrol	110	11/95-08/00	3RZ-FE								
Engine: All engines — Information: 01/08/96 ->												4.9792
2.7 4WD	Petrol	112	11/95-08/02	3RZ-FE								
Engine: All engines — Information: ->year 01/08/96, x 1, DISTRIBUTOR										9.6098 C10		
2.7 i	Petrol	112	11/95-03/96	3RZ-FE								
Engine: All engines — Information: 01/08/96 ->												4.9792
3.0	Petrol	105	08/88-11/95	3VZ-E								
Engine: All engines — Information: 01/08/91 ->, version Denso							2.7630/42					
Engine: All engines — Information: ->year 01/08/91										9.6102 C10		
Engine: All engines — Information: 01/08/91 ->										9.6103 C10		
3.0	Petrol	112	08/88-10/95	3VZ-E								
Engine: All engines — Information: 01/08/91 ->, version Denso							2.7630/42					
Engine: All engines — Information: ->year 01/08/91										9.6102 C10		
Engine: All engines — Information: 01/08/91 ->										9.6103 C10		
3.0 [USA]	Petrol	0	01/88-12/91	3VZ-E								
Engine: All engines — Information: ->year 01/08/91										9.6102 C10		
Engine: All engines — Information: 01/08/91 ->										9.6103 C10		
AQUA												
1.5 Hybrid	Petrol/ Electric	54	12/11->	1NZ-FXE								
Engine: All engines — Information: Qty: 4										9.6359 C10		
AURION												
3.5	Petrol	200	03/06->	2GR-FE								
Engine: All engines — Information: x 6, COIL ON PLUG										9.6438 C10		
AURIS I												
1.33 Dual-VVTi	Petrol	73	01/10-09/12	1NR-FE								
Engine: All engines — Information: x 4, COIL ON PLUG										9.6437 C10		
1.33 Dual-VVTi	Petrol	74	05/09-09/12	1NR-FE								
Engine: All engines — Information: x 4, COIL ON PLUG										9.6437 C10		

A10	CONDENSER	**A20**	CONTACT SET	**A40**	DISTRIBUTOR CAP	**A50**	ROTOR	**A70**	PICK-UP
C10	COIL	**C20**	IGNITION MODULE	**C30**	ELECTRONIC IGNITION KIT	**E01**	IGNITION CABLE SET		

The present application list is a brief version. For the detailed information about the possibility of installation on a specific vehicle, please refer to our web-catalogue http://catalogo.facet.eu/

Vehicle	alim.	kW	Date	Engine	FUNCTIONS ON THE VEHICLE A10	A20	A40	A50	A70	C10 - C30	C20	E01
1.4	Petrol	71	03/07-09/12	85HFC4GB								
All engines	x 4, COIL ON PLUG									9.6361 C10		
1.6	Petrol	91	03/07-09/12	1ZR-FE								
All engines	x 4, COIL ON PLUG									9.6436 C10		
1.6	Petrol	97	05/09-09/12	1ZR-FAE, 1ZR-FE								
Eng. 1ZR-FAE	x 4, COIL ON PLUG									9.6436 C10		
Eng. 1ZR-FE	Qty: 4									9.6436 C10		
1.8	Petrol	100	10/06-09/12	2ZR-FAE, 2ZR-FE								
Eng. 2ZR-FAE	Qty: 4									9.6436 C10		
Eng. 2ZR-FE	x 4, COIL ON PLUG									9.6436 C10		
1.8	Petrol	106	02/09-09/12	2ZR-FAE								
All engines	Qty: 4									9.6436 C10		
1.8	Petrol	108	02/09-09/12	2ZR-FAE								
All engines	x 4, COIL ON PLUG									9.6436 C10		
1.8 4WD	Petrol	100	10/06-10/09	2ZR-FAE								
All engines	Qty: 4									9.6436 C10		
1.8 Hybrid	Petrol/ Electric	73	09/10-09/12	2ZR-FXE								
All engines	x 4, COIL ON PLUG									9.6436 C10		
AURIS II												
1.2	Petrol	85	03/15-12/18	8NR-FTS								
All engines	x 4, COIL ON PLUG									9.6545 C10		
1.3	Petrol	73	10/12-12/18	1NR-FE								
All engines	x 4, COIL ON PLUG									9.6437 C10		
1.6	Petrol	97	10/12-12/18	1ZR-FAE								
All engines	x 4, COIL ON PLUG									9.6436 C10		
1.8 Hybrid	Petrol/ Electric	73	10/12-12/18	2ZR-FXE								
All engines	x 4, COIL ON PLUG									9.6436 C10		
AVENSIS I												
1.6	Petrol	74	09/97-10/00	4A-FE								
All engines	version Bosch						2.7494PHT	3.7573/21RS				
All engines	version Denso						2.7630/35	3.7629				
All engines	LHD, Terra, -oil cooler											4.9209
All engines	LHD											4.9879

A10	CONDENSER	A20	CONTACT SET	A40	DISTRIBUTOR CAP	A50	ROTOR	A70	PICK-UP
C10	COIL	C20	IGNITION MODULE	C30	ELECTRONIC IGNITION KIT	E01	IGNITION CABLE SET		

The present application list is a brief version. For the detailed information about the possibility of installation on a specific vehicle, please refer to our web-catalogue http://catalogo.facet.eu/

Vehicle	alim.	kW	Date	Engine	FUNCTIONS ON THE VEHICLE A10	A20	A40	A50	A70	C10 - C30	C20	E01
1.6	Petrol	81	09/97-02/03	ENGINE 3ZZ-FE, 4A-FE								
Engine	Information											
Eng. 4A-FE	version Bosch			2.7494PHT	3.7573/21RS							
Eng. 4A-FE	version Denso			2.7630/35	3.7629							
Eng. 3ZZ-FE	x 4, COIL ON PLUG					9.6361	C10					
Eng. 4A-FE	LHD, Terra, -oil cooler											4.9209
Eng. 4A-FE	LHD											4.9879
1.6 VVT-i	Petrol	81	10/00-02/03	ENGINE 3ZZ-FE								
Engine	Information											
All engines	x 4, COIL ON PLUG					9.6361	C10					
1.8	Petrol	95	10/00-02/03	ENGINE 1ZZFE								
Engine	Information											
All engines	x 4, COIL ON PLUG					9.6361	C10					
1.8 VVT-i	Petrol	95	10/00-02/03	ENGINE 1ZZFE								
Engine	Information											
All engines	x 4, COIL ON PLUG					9.6361	C10					
2.0	Petrol	110	10/00-02/03	ENGINE 1AZ-FSE								
Engine	Information											
All engines	x 4, COIL ON PLUG, FOR: (J)					9.6358	C10					
2.0	Petrol	94	09/97-10/00	ENGINE 3S-FE								
Engine	Information											
All engines												4.9856
2.0 VVT-i	Petrol	110	10/00-02/03	ENGINE 1AZ-FSE								
Engine	Information											
All engines	x 4, COIL ON PLUG, FOR: (J)					9.6358	C10					
AVENSIS II												
1.6 VVT-i	Petrol	81	04/03-11/08	ENGINE 3ZZ-FE								
Engine	Information											
All engines	x 4, COIL ON PLUG					9.6361	C10					
1.8	Petrol	95	03/03-11/08	ENGINE 1ZZFE								
Engine	Information											
All engines	x 4, COIL ON PLUG					9.6361	C10					
2.0	Petrol	108	03/03-11/08	ENGINE 1AZ-FSE								
Engine	Information											
All engines	x 4, COIL ON PLUG, FOR: (J)					9.6358	C10					
2.0	Petrol	110	08/01-11/09	ENGINE 1AZ-FE								
Engine	Information											
All engines	x 4, COIL ON PLUG, FOR: (J)					9.6366	C10					
2.0 VVTi	Petrol	114	01/03-11/08	ENGINE 1AZ-FE, 1AZ-FSE								
Engine	Information											
Eng. 1AZ-FE	01/09/05 ->, Qty: 4					9.6358	C10					
Eng. 1AZ-FSE	x 4, COIL ON PLUG, x 4, COIL ON PLUG, FOR: (J), FOR: (J)					9.6358	C10					
Eng. 1AZ-FE	->year 01/09/05, Qty: 4					9.6366	C10					
Eng. 1AZ-FE	x 4, COIL ON PLUG, FOR: (J)					9.6366	C10					
2.4	Petrol	115	08/01-08/07	ENGINE 2AZ-FE								
Engine	Information											
All engines	Qty: 4					9.6366	C10					

A10	CONDENSER	A20	CONTACT SET	A40	DISTRIBUTOR CAP	A50	ROTOR	A70	PICK-UP
C10	COIL	C20	IGNITION MODULE	C30	ELECTRONIC IGNITION KIT	E01	IGNITION CABLE SET		

The present application list is a brief version. For the detailed information about the possibility of installation on a specific vehicle, please refer to our web-catalogue http://catalogo.facet.eu/

Vehicle	alim.	kW	Date	Engine	FUNCTIONS ON THE VEHICLE A10	A20	A40	A50	A70	C10 - C30	C20	E01
2.4	Petrol	120	10/03-10/08	2AZ-FSE								
Engine: All engines	Information: x 4, COIL ON PLUG, FOR: (J)									9.6358 C10		
2.4	Petrol	125	09/03-11/08	2AZ-FSE								
Engine: All engines	Information: x 4, COIL ON PLUG, FOR: (J)									9.6358 C10		
2.4 4WD	Petrol	115	11/03-08/06	2AZ-FE								
Engine: All engines	Information: Qty: 4									9.6366 C10		
AVENSIS III												
1.6	Petrol	97	11/08-10/18	1ZR-FAE								
Engine: All engines	Information: x 4, COIL ON PLUG									9.6436 C10		
1.8	Petrol	108	11/08-10/18	2ZR-FAE								
Engine: All engines	Information: x 4, COIL ON PLUG									9.6436 C10		
2.0	Petrol	100	11/08-04/11	1AZ-FE								
Engine: All engines	Information: Qty: 4									9.6366 C10		
2.0	Petrol	112	11/08-10/18	3ZR-FAE, 3ZR-FE								
Engine: All engines	Information: x 4, COIL ON PLUG									9.6436 C10		
AYGO I												
1.0	Petrol	50	07/05-05/14	1KR-FE								
Engine: All engines	Information: x 3, COIL ON PLUG									9.6361 C10		
1.0 GPL	Petrol/ Liquified Petro-leum Gas (LPG)	50	07/05-05/14	1KR-FE								
Engine: All engines	Information: x 3, COIL ON PLUG									9.6361 C10		
1.0 VVTi	Petrol	50	07/05-05/14	1KR-FE								
Engine: All engines	Information: x 3, COIL ON PLUG									9.6361 C10		
AYGO II												
1.0	Petrol	51	05/14->	1KR-FE								
Engine: All engines	Information: x 3, COIL ON PLUG, FOR: (J)									9.6359 C10		
1.0 VVTi	Petrol	53	03/18->	1KR-FE								
Engine: All engines	Information: x 3, COIL ON PLUG, FOR: (J)									9.6359 C10		
1.2	Petrol	60	05/14->	1PP								
Engine: All engines	Information: x 3, COIL ON PLUG									9.6509 C10		

A10	CONDENSER	A20	CONTACT SET	A40	DISTRIBUTOR CAP	A50	ROTOR	A70	PICK-UP
C10	COIL	C20	IGNITION MODULE	C30	ELECTRONIC IGNITION KIT	E01	IGNITION CABLE SET		

The present application list is a brief version. For the detailed information about the possibility of installation on a specific vehicle, please refer to our web-catalogue http://catalogo.facet.eu/

Vehicle	alim.	kW	Date	Engine	FUNCTIONS ON THE VEHICLE							
					A10	A20	A40	A50	A70	C10 - C30	C20	E01

CAMRY

1.8	Petrol	66	11/86-08/89	ENGINE: 1S

Engine	Information	A10	A20	A40	A50	A70	C10 - C30	C20	E01
All engines	01/08/87 ->, version Denso				3.7627				

2.0	Petrol	108	05/06-09/11	ENGINE: 1AZ-FE

Engine	Information	A10	A20	A40	A50	A70	C10 - C30	C20	E01
All engines	x 4, version 1, x 4, COIL ON PLUG, version 2, COIL ON PLUG, FOR: (J)						9.6358 C10		

2.0	Petrol	109	09/11->	ENGINE: 1AZ-FE

Engine	Information	A10	A20	A40	A50	A70	C10 - C30	C20	E01
All engines	Qty: 4						9.6358 C10		
All engines	x 4, COIL ON PLUG, FOR: (J)						9.6358 C10		

2.0	Petrol	110	08/01->	ENGINE: 1AZ-FE, 6ARFSE

Engine	Information	A10	A20	A40	A50	A70	C10 - C30	C20	E01
Eng. 1AZ-FE	x 4, COIL ON PLUG, FOR: (J)						9.6366 C10		
Eng. 6ARFSE	x 4, COIL ON PLUG, FOR: (J)						9.6437 C10		

2.0	Petrol	123	12/14->	ENGINE: 6ARFSE

Engine	Information	A10	A20	A40	A50	A70	C10 - C30	C20	E01
All engines	Qty: 4						9.6437 C10		

2.0	Petrol	88	03/83-07/88	ENGINE: 3S-FE

Engine	Information	A10	A20	A40	A50	A70	C10 - C30	C20	E01
All engines	version Denso				3.7629				
All engines							9.6097 C10		

2.0	Petrol	89	11/86-02/93	ENGINE: 3S-FE

Engine	Information	A10	A20	A40	A50	A70	C10 - C30	C20	E01
All engines	version Denso				3.7629				
All engines							9.6097 C10		

2.0	Petrol	93	09/89-06/91	ENGINE: 3S-FE

Engine	Information	A10	A20	A40	A50	A70	C10 - C30	C20	E01
All engines	version Denso				3.7629				
All engines							9.6097 C10		

2.0	Petrol	94	11/86-05/91	ENGINE: 3S-FE

Engine	Information	A10	A20	A40	A50	A70	C10 - C30	C20	E01
All engines	version Denso				3.7629				
All engines							9.6097 C10		

2.0 4WD	Petrol	88	03/83-06/91	ENGINE: 3S-FE

Engine	Information	A10	A20	A40	A50	A70	C10 - C30	C20	E01
All engines	version Denso				3.7629				
All engines							9.6097 C10		

2.0 4WD	Petrol	94	08/88-05/91	ENGINE: 3S-FE

Engine	Information	A10	A20	A40	A50	A70	C10 - C30	C20	E01
All engines	version Denso				3.7629				
All engines							9.6097 C10		

2.2	Petrol	100	06/91-07/96	ENGINE: 5S-FE

Engine	Information	A10	A20	A40	A50	A70	C10 - C30	C20	E01
All engines	01/08/93 ->, version Denso			2.7630/37					
All engines	version Denso				3.7629				
All engines							9.6098 C10		
All engines	01/08/93 ->								4.9793

A10 CONDENSER	A20 CONTACT SET	A40 DISTRIBUTOR CAP	A50 ROTOR	A70 PICK-UP
C10 COIL	C20 IGNITION MODULE	C30 ELECTRONIC IGNITION KIT	E01 IGNITION CABLE SET	

The present application list is a brief version. For the detailed information about the possibility of installation on a specific vehicle, please refer to our web-catalogue http://catalogo.facet.eu/

Vehicle	alim.	kW	Date	Engine	FUNCTIONS ON THE VEHICLE							
					A10	A20	A40	A50	A70	C10 - C30	C20	E01
2.2	Petrol	93	02/93-09/02	5S-FE								
All engines	01/08/93 ->, version Denso					2.7630/37						4.9856
All engines	version Denso							3.7629				
All engines										9.6098 C10		4.9856
All engines	01/08/93 ->											4.9793
2.2	Petrol	96	08/96-11/01	5S-FE								
All engines												4.9856
2.2	Petrol	98	08/99->	5S-FNE								
All engines												4.9856
2.4	Petrol	112	11/01-11/06	2AZ-FE								
All engines	x 4, COIL ON PLUG, FOR: (J)									9.6366 C10		
2.4	Petrol	116	01/06-09/11	2AZ-FE								
All engines	->year 01/03/09, x 4, COIL ON PLUG, x 4, COIL ON PLUG, FOR: (J)									9.6358 C10		
All engines	01/04/09 ->, x 4, COIL ON PLUG, FOR: (J)									9.6366 C10		
2.4	Petrol	117	09/01-01/06	2AZ-FE								
All engines	01/09/05 ->, Qty: 4									9.6358 C10		
All engines	->year 01/09/05, Qty: 4									9.6366 C10		
2.4	Petrol	120	01/02-11/06	2AZ-FE								
All engines	01/09/05 ->, Qty: 4									9.6358 C10		
All engines	->year 01/09/05, Qty: 4									9.6366 C10		
2.4	Petrol	123	01/06-09/11	2AZ-FE								
All engines	->year 01/03/09, x 4, COIL ON PLUG, x 4, COIL ON PLUG, FOR: (J)									9.6358 C10		
All engines	01/04/09 ->, x 4, COIL ON PLUG, FOR: (J)									9.6366 C10		
2.4	Petrol	127	01/06-09/11	2AZ-FE								
All engines	->year 01/03/09, x 4, COIL ON PLUG, x 4, COIL ON PLUG, FOR: (J)									9.6358 C10		
All engines	01/04/09 ->, x 4, COIL ON PLUG, FOR: (J)									9.6366 C10		
2.4 [CHN]	Petrol/ Electric	0	03/10->	3AZ-FXE								
All engines	Qty: 4									9.6358 C10		
2.4 Hybrid	Petrol/ Electric	105	03/06-07/11	2AZ-FXE								
All engines	FOR: (USA), Qty: 4, no specific info conc. application available									9.6358 C10		
All engines	NOT FOR: (USA), Qty: 4, no specific info conc. application available									9.6366 C10		
2.4 Hybrid	Petrol/ Electric	110	01/06-09/11	2AZ-FXE								
All engines	FOR: (USA), Qty: 4, no specific info conc. application available									9.6358 C10		

A10	CONDENSER	A20	CONTACT SET	A40	DISTRIBUTOR CAP	A50	ROTOR	A70	PICK-UP
C10	COIL	C20	IGNITION MODULE	C30	ELECTRONIC IGNITION KIT	E01	IGNITION CABLE SET		

The present application list is a brief version. For the detailed information about the possibility of installation on a specific vehicle, please refer to our web-catalogue http://catalogo.facet.eu/

Vehicle	alim.	kW	Date	Engine	FUNCTIONS ON THE VEHICLE A10	A20	A40	A50	A70	C10 - C30	C20	E01
2.4 Hybrid	Petrol/ Electric	110	01/06-09/11	2AZ-FXE								
All engines	NOT FOR: (USA), Qty: 4, no specific info conc. application available									9.6366 C10		
2.4 VVTi LE	Petrol	116	01/06-11/06	2AZ-FE								
All engines	Qty: 4									9.6366 C10		
2.5	Petrol	118	10/86-06/91	2VZ-FE								
All engines										9.6102 C10		
2.5	Petrol	129	01/10-09/11	2AR-FE								
All engines	Qty: 4									9.6437 C10		
2.5	Petrol	131	10/11->	2AR-FE								
All engines	x 4, COIL ON PLUG, FOR: (J)									9.6437 C10		
2.5	Petrol	133	09/11->	2AR-FE								
All engines	MADE BY: (USA), x 4, COIL ON PLUG, x 4, COIL ON PLUG, FOR: (J), FOR: (J)									9.6437 C10		
2.5 [CHN]	Petrol	0	12/11->	5AR-FE								
All engines	Qty: 4									9.6437 C10		
2.5 Hybrid	Petrol/ Electric	115	09/11->	2AR-FXE								
All engines	Qty: 4									9.6437 C10		
All engines	x 4, COIL ON PLUG, FOR: (J)									9.6437 C10		
2.5 Hybrid	Petrol/ Electric	118	09/11->	2AR-FXE								
All engines	Qty: 4									9.6437 C10		
2.5 Hybrid [CHN]	Petrol/ Electric	118	05/12->	4AR-FXE								
All engines	Qty: 4									9.6437 C10		
3.5	Petrol	183	12/12->	2GR-FE								
All engines	FOR: (J), FOR: (USA), FOR: (RUS), x 6, COIL ON PLUG, x 6, COIL ON PLUG									9.6438 C10		
3.5	Petrol	197	01/06-11/06	2GR-FE								
All engines	Qty: 6									9.6438 C10		
3.5	Petrol	200	01/06-12/11	2GR-FE								
All engines	x 6, COIL ON PLUG									9.6438 C10		
3.5	Petrol	204	09/06-12/17	2GR-FE								
All engines	MADE BY: (J), MADE BY: (USA), x 6, COIL ON PLUG, x 6, COIL ON PLUG									9.6438 C10		

A10	CONDENSER	**A20**	CONTACT SET	**A40**	DISTRIBUTOR CAP	**A50**	ROTOR	**A70**	PICK-UP
C10	COIL	**C20**	IGNITION MODULE	**C30**	ELECTRONIC IGNITION KIT	**E01**	IGNITION CABLE SET		

The present application list is a brief version. For the detailed information about the possibility of installation on a specific vehicle, please refer to our web-catalogue http://catalogo.facet.eu/

Vehicle	alim.	kW	Date	Engine	FUNCTIONS ON THE VEHICLE							
					A10	A20	A40	A50	A70	C10 - C30	C20	E01
CAMRY SOLARA I												
				ENGINE								
2.2	Petrol	100	06/98-11/02	5S-FE								
Engine	Information											
All engines												4.9856
CAMRY SOLARA II												
				ENGINE								
2.4	Petrol	117	07/03-11/08	2AZ-FE								
Engine	Information											
All engines	01/09/05 ->, Qty: 4									9.6358 C10		
All engines	->year 01/09/05, Qty: 4									9.6366 C10		
CARINA E												
				ENGINE								
1.6	Petrol	73	12/93-09/97	4A-FE								
Engine	Information											
All engines	no specific info conc. application available, version Bosch						2.7494PHT	3.7573/21RS				
All engines	no specific info conc. application available, version Denso						2.7630/35	3.7629, 3.7636				
All engines	no specific info conc. application available									9.6099, 9.6185S C10		4.9209, 4.9879
				ENGINE								
1.6	Petrol	78	10/95-09/97	4A-FE								
Engine	Information											
All engines	no specific info conc. application available, version Bosch						2.7494PHT	3.7573/21RS				
All engines	no specific info conc. application available, version Denso						2.7630/35	3.7629, 3.7636				
All engines	no specific info conc. application available									9.6099, 9.6185S C10		4.9209, 4.9879
				ENGINE								
1.6	Petrol	79	01/93-09/97	4A-FE								
Engine	Information											
All engines	no specific info conc. application available, version Bosch						2.7494PHT	3.7573/21RS				
All engines	no specific info conc. application available, version Denso						2.7630/35	3.7629, 3.7636				
All engines	no specific info conc. application available									9.6099, 9.6185S C10		4.9209, 4.9879
				ENGINE								
1.6	Petrol	85	04/92-09/97	4A-FE								
Engine	Information											
All engines	no specific info conc. application available, version Bosch						2.7494PHT	3.7573/21RS				
All engines	no specific info conc. application available, version Denso						2.7630/35	3.7629, 3.7636				
All engines	no specific info conc. application available									9.6099, 9.6185S C10		4.9209, 4.9879
				ENGINE								
1.6 16V	Petrol	78	10/95-09/97	4A-FE								
Engine	Information											
All engines	no specific info conc. application available, version Bosch						2.7494PHT	3.7573/21RS				
All engines	no specific info conc. application available, version Denso						2.7630/35	3.7629, 3.7636				
All engines	no specific info conc. application available									9.6099, 9.6185S C10		4.9209, 4.9879
				ENGINE								
1.6 16V	Petrol	85	12/94-09/97	4A-FE								
Engine	Information											
All engines	no specific info conc. application available, version Bosch						2.7494PHT	3.7573/21RS				
All engines	no specific info conc. application available, version Denso						2.7630/35	3.7629, 3.7636				
All engines	no specific info conc. application available									9.6099, 9.6185S C10		4.9209, 4.9879
				ENGINE								
1.6 GLI	Petrol	79	04/92-09/97	4A-FE								
Engine	Information											
All engines	no specific info conc. application available, version Bosch						2.7494PHT	3.7573/21RS				
All engines	no specific info conc. application available, version Denso						2.7630/35	3.7629, 3.7636				
All engines	no specific info conc. application available									9.6099, 9.6185S C10		4.9209, 4.9879

A10	CONDENSER	A20	CONTACT SET	A40	DISTRIBUTOR CAP	A50	ROTOR	A70	PICK-UP
C10	COIL	C20	IGNITION MODULE	C30	ELECTRONIC IGNITION KIT	E01	IGNITION CABLE SET		

The present application list is a brief version. For the detailed information about the possibility of installation on a specific vehicle, please refer to our web-catalogue http://catalogo.facet.eu/

Vehicle	alim.	kW	Date	Engine	FUNCTIONS ON THE VEHICLE							
					A10	A20	A40	A50	A70	C10 - C30	C20	E01
1.6 i	Petrol	73	02/95-09/97	ENGINE **4A-FE**								

Engine	Information	A10	A20	A40	A50	A70	C10 - C30		C20	E01
All engines	no specific info conc. application available, version Bosch			2.7494PHT	3.7573/21RS					
All engines	no specific info conc. application available, version Denso			2.7630/35	3.7629, 3.7636					
All engines	no specific info conc. application available						9.6099, 9.6185S	C10		4.9209, 4.9879

1.8	Petrol	79	01/95-09/97	ENGINE **7A-FE**	

Engine	Information	A10	A20	A40	A50	A70	C10 - C30		C20	E01
All engines	version Denso				3.7636					
All engines										4.9879

1.8	Petrol	85	04/92-09/97	ENGINE **7A-FE**	

Engine	Information	A10	A20	A40	A50	A70	C10 - C30		C20	E01
All engines	version Denso				3.7636					
All engines										4.9879

1.8 i	Petrol	79	02/95-09/97	ENGINE **7A-FE**	

Engine	Information	A10	A20	A40	A50	A70	C10 - C30		C20	E01
All engines	version Denso				3.7636					
All engines										4.9879

1.8 i 16V	Petrol	79	01/95-09/97	ENGINE **7A-FE**	

Engine	Information	A10	A20	A40	A50	A70	C10 - C30		C20	E01
All engines	version Denso				3.7636					
All engines										4.9879

2.0	Petrol	98	01/93-09/97	ENGINE **3S-FE**	

Engine	Information	A10	A20	A40	A50	A70	C10 - C30		C20	E01
All engines	version Denso			2.7630/37	3.7629					
All engines							9.6098	C10		
All engines	01/05/94 ->									4.9793

2.0 GLI	Petrol	98	04/92-09/97	ENGINE **3S-FE**	

Engine	Information	A10	A20	A40	A50	A70	C10 - C30		C20	E01
All engines	version Denso			2.7630/37	3.7629					
All engines							9.6098	C10		
All engines	01/05/94 ->									4.9793

2.0 GTi	Petrol	116	04/92-12/95	ENGINE **3S-GE**	

Engine	Information	A10	A20	A40	A50	A70	C10 - C30		C20	E01
All engines	version Denso			2.7630/37	3.7629					
All engines							9.6098	C10		
All engines	01/05/94 ->									4.9793

2.0 GTi 16V	Petrol	129	03/94-09/97	ENGINE **3S-GE**	

Engine	Information	A10	A20	A40	A50	A70	C10 - C30		C20	E01
All engines	version Denso			2.7630/37	3.7629					
All engines							9.6098	C10		
All engines	01/05/94 ->									4.9793

2.0 i	Petrol	93	12/92-09/97	ENGINE **3S-FE**	

Engine	Information	A10	A20	A40	A50	A70	C10 - C30		C20	E01
All engines	version Denso			2.7630/37	3.7629					
All engines							9.6098	C10		
All engines	01/05/94 ->									4.9793

CARINA II

1.6	Petrol	55	10/83-11/87	ENGINE **4A-LC**	

Engine	Information	A10	A20	A40	A50	A70	C10 - C30		C20	E01
All engines	version Denso				3.7627					

A10	CONDENSER	**A20**	CONTACT SET	**A40**	DISTRIBUTOR CAP	**A50**	ROTOR	**A70**	PICK-UP
C10	COIL	**C20**	IGNITION MODULE	**C30**	ELECTRONIC IGNITION KIT	**E01**	IGNITION CABLE SET		

The present application list is a brief version. For the detailed information about the possibility of installation on a specific vehicle, please refer to our web-catalogue http://catalogo.facet.eu/

Vehicle	alim.	kW	Date	Engine	FUNCTIONS ON THE VEHICLE							
					A10	A20	A40	A50	A70	C10 - C30	C20	E01
1.6	Petrol	66	12/87-08/90	4A-F								
Engine	Information						2.7630/48	3.7629				
All engines	version Denso											
All engines										9.6099 C10		
1.6	Petrol	72	12/87-03/92	4A-FE								
Engine	Information											
All engines	version Denso							3.7629				
1.6	Petrol	75	12/87-03/92	4A-FE								
Engine	Information											
All engines	01/11/92 ->, version Denso						2.7630/32					
All engines	version Denso							3.7629				
1.6 4WD	Petrol	77	06/88-03/92	4A-FE								
Engine	Information											
All engines	version Denso							3.7629				
2.0	Petrol	89	12/87-04/92	3S-FE								
Engine	Information											
All engines	version Denso							3.7629				
All engines										9.6097 C10		
2.0	Petrol	94	12/87-03/92	3S-FE								
Engine	Information											
All engines	version Denso							3.7629				
All engines										9.6097 C10		
2.0 GLI	Petrol	89	12/87-03/92	3S-FE								
Engine	Information											
All engines	version Denso							3.7629				
All engines										9.6097 C10		
2.0 GLi	Petrol	94	12/87-03/92	3S-FE								
Engine	Information											
All engines	version Denso							3.7629				
All engines										9.6097 C10		
CELICA IV												
1.6	Petrol	63	04/86-08/89	4A-L								
Engine	Information						2.7622	3.7629				
All engines	version Denso											
All engines										9.6099 C10		
1.6 GT	Petrol	85	08/87-08/89	4A-GELC								
Engine	Information						2.7619	3.7627				
All engines	version Denso											
1.6 GT 16V	Petrol	91	09/85-08/89	4A-GEL								
Engine	Information						2.7619	3.7627				
All engines	version Denso											
1.6 GTI 16V	Petrol	92	01/88-12/89	4A-GEL								
Engine	Information						2.7619	3.7627				
All engines	version Denso											
2.0i [USA]	Petrol	0	01/85-12/87	2SELC, 3S-FE								
Engine	Information											
Eng. 2SELC	version Denso							3.7627				
Eng. 3S-FE	version Denso							3.7629				

A10	CONDENSER	A20	CONTACT SET	A40	DISTRIBUTOR CAP	A50	ROTOR	A70	PICK-UP
C10	COIL	C20	IGNITION MODULE	C30	ELECTRONIC IGNITION KIT	E01	IGNITION CABLE SET		

The present application list is a brief version. For the detailed information about the possibility of installation on a specific vehicle, please refer to our web-catalogue http://catalogo.facet.eu/

Vehicle	alim.	kW	Date	Engine	FUNCTIONS ON THE VEHICLE A10	A20	A40	A50	A70	C10 - C30	C20	E01
2.0i [USA]	Petrol	0	01/85-12/87	2SELC, 3S-FE								

Engine	Information	A10	A20	A40	A50	A70	C10 - C30		C20	E01
All engines							9.6097	C10		

CELICA V

1.6	Petrol	77	09/89-12/93	4A-FE

Engine	Information	A10	A20	A40	A50	A70	C10 - C30		C20	E01
All engines	version Denso			2.7630/32	3.7629					

1.6 16V [USA] [CAN]	Petrol	77	09/89-09/93	4A-FE

Engine	Information	A10	A20	A40	A50	A70	C10 - C30		C20	E01
All engines	version Denso				3.7629					

2.0	Petrol	115	10/89-01/94	3S-GE

Engine	Information	A10	A20	A40	A50	A70	C10 - C30		C20	E01
All engines	->year 01/08/91, version Denso			2.7630/21						
All engines	version Denso				3.7636					
All engines	01/08/91 ->, RHD						9.6103	C10		

2.0	Petrol	118	09/89-10/93	3S-GE

Engine	Information	A10	A20	A40	A50	A70	C10 - C30		C20	E01
All engines	->year 01/08/91, version Denso			2.7630/21						
All engines	version Denso				3.7636					
All engines	01/08/91 ->, RHD						9.6103	C10		

2.0 4WD	Petrol	150	10/89-11/93	3S-GTE

Engine	Information	A10	A20	A40	A50	A70	C10 - C30		C20	E01
All engines	->year 01/08/91, version Denso			2.7630/21						
All engines	version Denso				3.7636					
All engines	01/08/91 ->, RHD						9.6103	C10		

2.0 4WD	Petrol	153	10/89-01/94	3S-GTE

Engine	Information	A10	A20	A40	A50	A70	C10 - C30		C20	E01
All engines	->year 01/08/91, version Denso			2.7630/21						
All engines	version Denso				3.7636					
All engines	01/08/91 ->, RHD						9.6103	C10		

2.0 GTi	Petrol	115	10/89-11/93	3S-GE

Engine	Information	A10	A20	A40	A50	A70	C10 - C30		C20	E01
All engines	->year 01/08/91, version Denso			2.7630/21						
All engines	version Denso				3.7636					

2.2	Petrol	100	10/89-12/94	5S-FE

Engine	Information	A10	A20	A40	A50	A70	C10 - C30		C20	E01
All engines	version Denso, no specific info conc. application available			2.7630/37	3.7629, 3.7636					
All engines	no specific info conc. application available						9.6098, 9.6185S	C10		4.9793

CELICA VI

1.8 i 16V	Petrol	85	11/93-11/99	7A-FE

Engine	Information	A10	A20	A40	A50	A70	C10 - C30		C20	E01
All engines	version Denso			2.7630/35						
All engines							9.6099	C10		4.9209

1.8 i 16V [USA] [CAN]	Petrol	85	09/93-08/99	7A-FE

Engine	Information	A10	A20	A40	A50	A70	C10 - C30		C20	E01
All engines	version Denso			2.7630/35						
All engines	01/08/95 ->						9.6098	C10		
All engines	->year 01/08/95						9.6099	C10		
All engines										4.9209

A10	CONDENSER	A20	CONTACT SET	A40	DISTRIBUTOR CAP	A50	ROTOR	A70	PICK-UP
C10	COIL	C20	IGNITION MODULE	C30	ELECTRONIC IGNITION KIT	E01	IGNITION CABLE SET		

The present application list is a brief version. For the detailed information about the possibility of installation on a specific vehicle, please refer to our web-catalogue http://catalogo.facet.eu/

Vehicle	alim.	kW	Date	Engine	FUNCTIONS ON THE VEHICLE A10	A20	A40	A50	A70	C10 - C30	C20	E01
2.0 GTi	Petrol	129	08/94-08/99	3S-GE				3.7636				
										9.6185S	C10	
2.0 i 16V	Petrol	125	11/93-11/99	3S-GE				3.7636				
										9.6185S	C10	
2.0 i 16V	Petrol	129	11/93-11/99	3S-GE				3.7636				
										9.6185S	C10	
2.0 i Turbo 4WD	Petrol	178	02/94-11/99	3S-GTE				3.7636				
										9.6185S	C10	
2.2 GT	Petrol	100	11/93-08/99	5S-FE			2.7630/37	3.7629, 3.7636				
										9.6098, 9.6185S	C10	4.9793
CELICA VII												
1.8 16V VT-i	Petrol	105	08/99-07/05	1ZZFE						9.6361	C10	
C-HR												
1.2	Petrol	85	10/16->	8NR-FTS						9.6545	C10	
1.2 4WD	Petrol	85	10/16->	8NR-FTS						9.6545	C10	
1.2 4WD	Petrol	96	10/16->	8NR-FTS						9.6545	C10	
2.0	Petrol	109	11/16->	3ZR-FAE						9.6436	C10	
COROLLA												
1.2	Petrol	85	01/19->	8NR-FTS						9.6545	C10	
1.6	Petrol	81	05/97-09/99	4A-FE						9.6099	C10	
1.6 VVTi	Petrol	90	01/19->	1ZR-FAE, 1ZR-FE						9.6436	C10	

Engine	Information
All engines	version Denso
All engines	
All engines	x 4, COIL ON PLUG
All engines	no specific info conc. application available
All engines	version Denso, no specific info conc. application available
All engines	Corolla, x 4, COIL ON PLUG
All engines	x 1, DISTRIBUTOR

A10	CONDENSER	A20	CONTACT SET	A40	DISTRIBUTOR CAP	A50	ROTOR	A70	PICK-UP
C10	COIL	C20	IGNITION MODULE	C30	ELECTRONIC IGNITION KIT	E01	IGNITION CABLE SET		

The present application list is a brief version. For the detailed information about the possibility of installation on a specific vehicle, please refer to our web-catalogue http://catalogo.facet.eu/

Vehicle	alim.	kW	Date	Engine	FUNCTIONS ON THE VEHICLE							
					A10	A20	A40	A50	A70	C10 - C30	C20	E01
1.6 VVTi	Petrol	97	01/19->	1ZR-FAE, 1ZR-FE								
All engines	Corolla, x 4, COIL ON PLUG									9.6436 C10		
COROLLA IV												
1.8	Petrol	56	09/79-05/82	3T-C								
All engines	version Denso							3.7627				
1.8	Petrol	63	08/82-09/83	3T-C								
All engines	version Denso							3.7627				
COROLLA IX												
1.4 VVT-i	Petrol	71	10/01-02/07	02Z24, 67MR20DE								
All engines	Corolla, x 4, COIL ON PLUG, x 4, COIL ON PLUG									9.6361 C10		
1.6	Petrol	91	11/06-07/07	1ZR-FE								
All engines	Qty: 4									9.6436 C10		
1.6 VVT-i	Petrol	81	10/01-03/08	3ZZ-FE								
All engines	Corolla, x 4, COIL ON PLUG, x 4, COIL ON PLUG									9.6361 C10		
1.8	Petrol	100	12/01-12/07	1ZZFE								
All engines	MADE BY: (J), x 4, COIL ON PLUG									9.6361 C10		
1.8	Petrol	92	05/02-05/04	1ZZFE								
All engines	Corolla, x 4, COIL ON PLUG									9.6361 C10		
COROLLA V												
1.6	Petrol	53	08/85-08/87	4A-LC								
All engines										9.6097 C10		
1.6	Petrol	54	08/85-05/88	4A-LC								
All engines										9.6097 C10		
1.6	Petrol	55	08/84-08/87	4A-C								
All engines										9.6097 C10		
1.6	Petrol	58	04/85-05/89	4A-LC								
All engines										9.6097 C10		
1.6	Petrol	85	05/85-04/87	4A-GELC								
All engines	version Denso						2.7619	3.7627				
1.6 16V	Petrol	85	12/85-04/87	4A-GEC								
All engines	version Denso							3.7627				

A10	CONDENSER	A20	CONTACT SET	A40	DISTRIBUTOR CAP	A50	ROTOR	A70	PICK-UP
C10	COIL	C20	IGNITION MODULE	C30	ELECTRONIC IGNITION KIT	E01	IGNITION CABLE SET		

The present application list is a brief version. For the detailed information about the possibility of installation on a specific vehicle, please refer to our web-catalogue http://catalogo.facet.eu/

Vehicle	alim.	kW	Date	Engine	FUNCTIONS ON THE VEHICLE A10	A20	A40	A50	A70	C10 - C30	C20	E01
1.6 SR	Petrol	58	08/83-04/85	**4A-C**								
Engine: All engines	Information:									9.6097 C10		
COROLLA VERSO I												
1.6 VVT-i	Petrol	81	08/01-05/04	**3ZZ-FE**								
Engine: All engines	Information: x 4, COIL ON PLUG									9.6361 C10		
1.8 VVT-i	Petrol	99	12/01-05/04	**1ZZFE**								
Engine: All engines	Information: x 4, COIL ON PLUG									9.6361 C10		
1.8 VVTi 4WD	Petrol	99	07/01-02/04	**2CJXG**								
Engine: All engines	Information: Qty: 4									9.6361 C10		
COROLLA VERSO II												
1.6	Petrol	81	04/04-03/09	**3ZZ-FE**								
Engine: All engines	Information: x 4, COIL ON PLUG									9.6361 C10		
1.8	Petrol	95	04/04-03/09	**1ZZFE**								
Engine: All engines	Information: x 4, COIL ON PLUG									9.6361 C10		
COROLLA VI												
1.3	Petrol	55	08/87-06/92	**2E**								
Engine: All engines	Information: for emission-controlled vehicles, version Denso						2.7622, 2.7630/48					
Engine: All engines	Information: version Denso							3.7629				
Engine: All engines	Information:									9.6099 C10		4.9823
1.3	Petrol	60	05/87-04/92	**2E**								
Engine: All engines	Information: for emission-controlled vehicles, version Denso						2.7622, 2.7630/48					
Engine: All engines	Information: version Denso							3.7629				
Engine: All engines	Information:									9.6099 C10		4.9823
1.3 i	Petrol	55	08/87-06/92	**2E, 2E-E**								
Engine: All engines	Information: for emission-controlled vehicles, version Denso						2.7622, 2.7630/48					
Engine: All engines	Information: version Denso							3.7629				
Engine: All engines	Information:									9.6099 C10		4.9823
1.6	Petrol	66	05/87-11/92	**4A-F**								
Engine: All engines	Information: version Denso						2.7630/48	3.7629				
Engine: All engines	Information:									9.6099 C10		
1.6	Petrol	70	09/89-04/92	**4A-F**								
Engine: All engines	Information: version Denso						2.7630/48	3.7629				
Engine: All engines	Information:									9.6099 C10		
1.6	Petrol	71	01/88-12/92	**4A-F**								
Engine: All engines	Information: version Denso						2.7630/48	3.7629				
Engine: All engines	Information:									9.6099 C10		

A10	CONDENSER	**A20**	CONTACT SET	**A40**	DISTRIBUTOR CAP	**A50**	ROTOR	**A70**	PICK-UP
C10	COIL	**C20**	IGNITION MODULE	**C30**	ELECTRONIC IGNITION KIT	**E01**	IGNITION CABLE SET		

The present application list is a brief version. For the detailed information about the possibility of installation on a specific vehicle, please refer to our web-catalogue http://catalogo.facet.eu/

Vehicle	alim.	kW	Date	Engine	FUNCTIONS ON THE VEHICLE A10	A20	A40	A50	A70	C10 - C30	C20	E01
1.6	Petrol	77	08/89-04/92	ENGINE 4A-FE								
Engine: All engines	Information: AE92, version Denso						2.7630/32					
Engine: All engines	Information: version Denso							3.7629				
Engine: All engines	Information: AE95									9.6097 C10		
1.6 4WD	Petrol	66	08/87-08/89	ENGINE 4A-F								
Engine: All engines	Information: version Denso						2.7630/48	3.7629				
Engine: All engines	Information:									9.6099 C10		
1.6 GL 4WD	Petrol	70	10/87-08/90	ENGINE 4A-F								
Engine: All engines	Information: version Denso						2.7630/48	3.7629				
Engine: All engines	Information:									9.6099 C10		
1.6 GTi	Petrol	85	08/87-10/94	ENGINE 4A-GE								
Engine: All engines	Information: version Denso						2.7630/18	3.7627				
1.6 i	Petrol	77	05/87-05/92	ENGINE 4A-FE								
Engine: All engines	Information: AE92, version Denso						2.7630/32					
Engine: All engines	Information: version Denso							3.7629				
Engine: All engines	Information: AE95									9.6097 C10		
1.6 i 4WD	Petrol	77	10/87-08/90	ENGINE 4A-FE								
Engine: All engines	Information: AE92, version Denso						2.7630/32	3.7629				
Engine: All engines	Information: AE95									9.6097 C10		
1.6 XL	Petrol	70	09/89-04/92	ENGINE 4A-F								
Engine: All engines	Information: version Denso						2.7630/48	3.7629				
Engine: All engines	Information:									9.6099 C10		
1.6 XLI	Petrol	77	11/89-06/92	ENGINE 4A-FE								
Engine: All engines	Information: version Denso						2.7630/32	3.7629				
Engine: All engines	Information: AE95									9.6097 C10		
COROLLA VII												
1.3 12V	Petrol	53	07/92-04/97	ENGINE 2E								
Engine: All engines	Information: version Denso						2.7630/45	3.7629				
Engine: All engines	Information:									9.6099 C10		4.9393
1.3 XLI	Petrol	55	08/95-04/97	ENGINE 4E-FE								
Engine: All engines	Information: version Denso						2.7630/35	3.7629				
Engine: All engines	Information:									9.6099 C10		
Engine: All engines	Information: 01/05/95 ->											4.9435
1.3 XLI	Petrol	65	07/92-04/97	ENGINE 4E-FE								
Engine: All engines	Information: version Denso						2.7630/35	3.7629				
Engine: All engines	Information:									9.6099 C10		
Engine: All engines	Information: 01/05/95 ->											4.9435

A10	CONDENSER	A20	CONTACT SET	A40	DISTRIBUTOR CAP	A50	ROTOR	A70	PICK-UP
C10	COIL	C20	IGNITION MODULE	C30	ELECTRONIC IGNITION KIT	E01	IGNITION CABLE SET		

The present application list is a brief version. For the detailed information about the possibility of installation on a specific vehicle, please refer to our web-catalogue http://catalogo.facet.eu/

Vehicle	alim.	kW	Date	Engine	FUNCTIONS ON THE VEHICLE A10	A20	A40	A50	A70	C10 - C30	C20	E01
1.3 XLI 16V	Petrol	65	07/92-09/95	**4E-FE**								
All engines	version Denso					2.7630/35	3.7629					
All engines									9.6099	C10		
All engines	01/05/95 ->											4.9435
1.6 GLI	Petrol	84	07/92-04/97	**4A-FE**								
All engines	version Denso						2.7630/35					
All engines	01/11/95 ->, version Denso							3.7629				
All engines									9.6099	C10		4.9209
1.6 Si	Petrol	84	07/92-04/97	**4A-FE**								
All engines	version Denso						2.7630/35					
All engines	01/11/95 ->, version Denso							3.7629				
All engines									9.6099	C10		4.9209
1.8 16V 4WD	Petrol	81	09/95-04/97	**7A-FE**								
All engines	version Denso						2.7630/35					
All engines									9.6099	C10		4.9209
1.8 GT	Petrol	86	11/92-05/95	**7A-FE**								
All engines	version Denso						2.7630/35					
All engines									9.6099	C10		4.9209
COROLLA VIII												
1.3	Petrol	55	05/97-10/01	**2E**								
All engines	version Denso						2.7630/45	3.7629				
All engines	Corolla, x 1, DISTRIBUTOR								9.6099	C10		
All engines												4.9393
1.4	Petrol	63	04/97-02/00	**4E-FE**								
All engines												4.9880
1.6	Petrol	81	04/97-01/02	**3ZZ-FE, 4A-FE**								
Eng. 4A-FE	version Denso						2.7630/35	3.7629				
Eng. 4A-FE	Corolla, x 1, DISTRIBUTOR, x 1, DISTRIBUTOR								9.6099	C10		
Eng. 3ZZ-FE	Corolla, x 4, COIL ON PLUG								9.6361	C10		
Eng. 4A-FE												4.9209
1.6 16V	Petrol	81	10/99-12/01	**3ZZ-FE**								
All engines	Corolla, x 4, COIL ON PLUG, x 4, COIL ON PLUG								9.6361	C10		
1.6 Aut.	Petrol	79	04/97-02/00	**4A-FE**								
All engines	version Denso						2.7630/35	3.7629				
All engines	Corolla, x 1, DISTRIBUTOR, x 1, DISTRIBUTOR								9.6099	C10		
All engines												4.9209
1.8	Petrol	81	10/97-10/01	**7A-FE**								
All engines	Corolla, x 1, DISTRIBUTOR								9.6099	C10		

A10	CONDENSER	**A20**	CONTACT SET	**A40**	DISTRIBUTOR CAP	**A50**	ROTOR	**A70**	PICK-UP
C10	COIL	**C20**	IGNITION MODULE	**C30**	ELECTRONIC IGNITION KIT	**E01**	IGNITION CABLE SET		

The present application list is a brief version. For the detailed information about the possibility of installation on a specific vehicle, please refer to our web-catalogue http://catalogo.facet.eu/

Vehicle	alim.	kW	Date	Engine	FUNCTIONS ON THE VEHICLE A10	A20	A40	A50	A70	C10 - C30	C20	E01
1.8 4WD	Petrol	81	04/97-10/01	ENGINE 7A-FE								
Engine	Information						2.7630/35					
All engines	version Denso											
All engines										9.6098 C10		4.9209
COROLLA X												
1.3 VVT-i	Petrol	63	03/08->	ENGINE 2NZ-FE								
Engine	Information											
All engines	Qty: 4									9.6359 C10		
1.33	Petrol	74	12/08-07/14	ENGINE 1NR-FE								
Engine	Information											
All engines	Corolla, x 4, COIL ON PLUG									9.6437 C10		
1.4 VVT-i	Petrol	71	11/06-11/13	ENGINE 4ZZFE								
Engine	Information											
All engines	Corolla, x 4, COIL ON PLUG									9.6361 C10		
1.5	Petrol	81	09/06->	ENGINE 1NZ-FE								
Engine	Information											
All engines	Qty: 4, -transm. type 4FC									9.6358 C10		
All engines	Qty: 4, t.tnr. 4FC									9.6359 C10		
1.5 4WD	Petrol	77	09/06->	ENGINE 1NZ-FE								
Engine	Information											
All engines	Qty: 4, -transm. type 4FC									9.6358 C10		
All engines	Qty: 4, t.tnr. 4FC									9.6359 C10		
1.6	Petrol	97	11/06-11/13	ENGINE 1ZR-FAE, 1ZR-FE								
Engine	Information											
All engines	Corolla, x 4, COIL ON PLUG									9.6436 C10		
1.6 Dual VVTi	Petrol	91	01/07-07/14	ENGINE 1ZR-FE								
Engine	Information											
All engines	Corolla, x 4, COIL ON PLUG									9.6436 C10		
1.6 VVTi	Petrol	100	03/07-12/10	ENGINE 1ZR-FE								
Engine	Information											
All engines	Corolla, x 4, COIL ON PLUG									9.6436 C10		
1.6 VVTi	Petrol	80	12/07-06/13	ENGINE 3ZZ-FE								
Engine	Information											
All engines	Qty: 4									9.6361 C10		
1.6 VVTi	Petrol	81	08/07-06/13	ENGINE 3ZZ-FE								
Engine	Information											
All engines	Qty: 4									9.6361 C10		
1.6 VVTi	Petrol	90	07/10-05/14	ENGINE 1ZR-FE								
Engine	Information											
All engines	Corolla, x 4, COIL ON PLUG									9.6436 C10		
1.8	Petrol	106	09/06->	ENGINE 2ZR-FAE								
Engine	Information											
All engines	Qty: 4									9.6436 C10		
1.8	Petrol	108	01/09->	ENGINE 2ZR-FAE								
Engine	Information											
All engines	Qty: 4									9.6436 C10		

A10	CONDENSER	A20	CONTACT SET	A40	DISTRIBUTOR CAP	A50	ROTOR	A70	PICK-UP
C10	COIL	C20	IGNITION MODULE	C30	ELECTRONIC IGNITION KIT	E01	IGNITION CABLE SET		

The present application list is a brief version. For the detailed information about the possibility of installation on a specific vehicle, please refer to our web-catalogue http://catalogo.facet.eu/

Vehicle	alim.	kW	Date	Engine	FUNCTIONS ON THE VEHICLE							
					A10	A20	A40	A50	A70	C10 - C30	C20	E01
1.8	Petrol	111	08/10->	ENGINE 2ZR-FE								
Engine: All engines — Information: Qty: 4, no specific info conc. application available										9.6436 C10		
1.8 16V	Petrol	97	08/07->	ENGINE 2CJXG								
Engine: All engines — Information: Qty: 4										9.6361 C10		
1.8 4WD	Petrol	100	09/07->	ENGINE 2ZR-FAE								
Engine: All engines — Information: Qty: 4										9.6436 C10		
1.8 4WD	Petrol	98	09/06->	ENGINE 2ZR-FAE								
Engine: All engines — Information: Qty: 4										9.6436 C10		
1.8 CNG	CNG	0	06/09->	ENGINE 2CJXG								
Engine: All engines — Information: Qty: 4										9.6361 C10		
1.8 FlexFuel [BRA]	Flexfuel	100	03/08->	ENGINE 1ZZ-FBE								
Engine: All engines — Information: Qty: 4										9.6361 C10		
1.8 VVTi	Petrol	103	08/10->	ENGINE 2ZR-FBE, 2ZR-FE								
Engine: All engines — Information: Qty: 4, no specific info conc. application available										9.6436 C10		
2.0	Petrol	107	04/10->	ENGINE 3ZR-FE								
Engine: All engines — Information: Qty: 4										9.6436 C10		
2.0 FlexFuel	Flexfuel	0	04/10->	ENGINE 3ZR-FBE								
Engine: All engines — Information: Qty: 4										9.6436 C10		
2.0 VVTi	Petrol	116	08/10->	ENGINE 3ZR-FE								
Engine: All engines — Information: Qty: 4										9.6436 C10		
2.4	Petrol	116	01/08->	ENGINE 2AZ-FE								
Engine: All engines — Information: Qty: 4, no specific info conc. application available										9.6358, 9.6366 C10		
COROLLA XI												
1.3	Petrol	70	05/12->	ENGINE 1NR-FE								
Engine: All engines — Information: Qty: 4										9.6437 C10		
1.3	Petrol	73	06/13-12/18	ENGINE 1NR-FE								
Engine: All engines — Information: Corolla, x 4, COIL ON PLUG										9.6437 C10		
1.5	Petrol	80	05/12->	ENGINE 1NZ-FE								
Engine: All engines — Information: Qty: 4										9.6358 C10		
1.5 4WD	Petrol	76	05/12->	ENGINE 1NZ-FE								
Engine: All engines — Information: Qty: 4										9.6358 C10		

A10	CONDENSER	A20	CONTACT SET	A40	DISTRIBUTOR CAP	A50	ROTOR	A70	PICK-UP
C10	COIL	C20	IGNITION MODULE	C30	ELECTRONIC IGNITION KIT	E01	IGNITION CABLE SET		

The present application list is a brief version. For the detailed information about the possibility of installation on a specific vehicle, please refer to our web-catalogue http://catalogo.facet.eu/

Vehicle	alim.	kW	Date	Engine	FUNCTIONS ON THE VEHICLE A10	A20	A40	A50	A70	C10 - C30	C20	E01
1.5 Hybrid	Petrol/ Electric	54	10/14->	1NZ-FXE								
Engine: All engines	Information: Qty: 4									9.6359 C10		
1.6	Petrol	90	06/13-12/18	1ZR-FE								
Engine: All engines	Information: Corolla, x 4, COIL ON PLUG									9.6436 C10		
1.6	Petrol	97	06/13-12/18	1ZR-FAE								
Engine: All engines	Information: Corolla, x 4, COIL ON PLUG									9.6436 C10		
1.6 BiFuel	Petrol/ Compressed Natural Gas (CNG)	90	06/13->	1ZR-FE								
Engine: All engines	Information: Qty: 4									9.6436 C10		
1.8	Petrol	103	05/12->	2ZR-FAE								
Engine: All engines	Information: Qty: 4									9.6436 C10		
1.8 [USA] [CAN]	Petrol	0	08/13->	2ZR-FAE								
Engine: All engines	Information: Qty: 4									9.6436 C10		
1.8 VVTi	Petrol	103	06/13-08/19	2ZR-FE								
Engine: All engines	Information: Corolla, x 4, COIL ON PLUG									9.6436 C10		
1.8 VVT-i	Petrol	111	12/13->	2ZR-FE								
Engine: All engines	Information: Qty: 4									9.6436 C10		
2.0 VVT-i CNG	Petrol/ Compressed Natural Gas (CNG)	105	10/13-12/18	3ZRFECNG								
Engine: All engines	Information: Corolla, x 4, COIL ON PLUG									9.6436 C10		
DYNA												
1.6	Diesel	51	05/85-08/87	1Y								
Engine: All engines	Information: version Denso						2.7614	3.7614				
1.8	Petrol	57	05/95-08/01	2Y								
Engine: All engines	Information: 01/09/91 ->, version Denso						2.7613					
Engine: All engines	Information: ->year 01/09/91, version Denso						2.7614					
Engine: All engines	Information: ->year 01/09/89, version Denso							3.7614				
Engine: All engines	Information: 01/09/89 ->, version Denso, no specific info conc. application available							3.7627				
Engine: All engines	Information: version Denso, no specific info conc. application available							3.7630				
2.0	Petrol	65	05/95-10/01	3Y								
Engine: All engines	Information: version Denso, YY211						2.7613	3.7627				

A10	CONDENSER	**A20**	CONTACT SET	**A40**	DISTRIBUTOR CAP	**A50**	ROTOR	**A70**	PICK-UP
C10	COIL	**C20**	IGNITION MODULE	**C30**	ELECTRONIC IGNITION KIT	**E01**	IGNITION CABLE SET		

The present application list is a brief version. For the detailed information about the possibility of installation on a specific vehicle, please refer to our web-catalogue http://catalogo.facet.eu/

Vehicle	alim.	kW	Date	Engine	FUNCTIONS ON THE VEHICLE A10	A20	A40	A50	A70	C10 - C30	C20	E01

DYNA 100

				ENGINE
1.8	Petrol	58	08/85-04/95	2Y

Engine	Information	A10	A20	A40	A50	A70	C10 - C30	C20	E01
All engines	01/09/91 ->, version Denso			2.7613					
All engines	->year 01/09/91, version Denso			2.7614					
All engines	->year 01/09/89, version Denso				3.7614				
All engines	01/09/89 ->, version Denso, no specific info conc. application available				3.7627				
All engines	version Denso, no specific info conc. application available				3.7630				

				ENGINE
1.8	Petrol	61	08/87-04/95	2Y

Engine	Information	A10	A20	A40	A50	A70	C10 - C30	C20	E01
All engines	01/09/91 ->, version Denso			2.7613					
All engines	->year 01/09/91, version Denso			2.7614					
All engines	->year 01/09/89, version Denso				3.7614				
All engines	01/09/89 ->, version Denso, no specific info conc. application available				3.7627				
All engines	version Denso, no specific info conc. application available				3.7630				

DYNA 150

				ENGINE
1.8	Petrol	58	08/85-08/86	2Y

Engine	Information	A10	A20	A40	A50	A70	C10 - C30	C20	E01
All engines	version Denso				3.7614				

				ENGINE
2.0	Petrol	65	08/85-09/87	3Y

Engine	Information	A10	A20	A40	A50	A70	C10 - C30	C20	E01
All engines	version Denso, YY60			2.7614	3.7614				

				ENGINE
2.0	Petrol	79	08/85-08/88	3Y

Engine	Information	A10	A20	A40	A50	A70	C10 - C30	C20	E01
All engines	version Denso, YY60			2.7614	3.7614				

DYNA 200

				ENGINE
2.7	Petrol	92	06/95-07/01	3RZ-FE

Engine	Information	A10	A20	A40	A50	A70	C10 - C30	C20	E01
All engines	RHD						9.6098 C10		
All engines	01/08/99 ->								4.9792

ECHO

				ENGINE
1.5 i 16V [USA]	Petrol	81	08/99->	1NZFE

Engine	Information	A10	A20	A40	A50	A70	C10 - C30	C20	E01
All engines	Qty: 4						9.6359 C10		

FJ CRUISER

				ENGINE
4.0	Petrol	176	06/05-10/09	1GR-FE

Engine	Information	A10	A20	A40	A50	A70	C10 - C30	C20	E01
All engines	->year 01/08/09, x 6, COIL ON PLUG, FOR: (J)						9.6358 C10		
All engines	01/09/09 ->, x 6, COIL ON PLUG, FOR: (J)						9.6437 C10		

				ENGINE
4.0	Petrol	178	01/06-12/11	1GR-FE

Engine	Information	A10	A20	A40	A50	A70	C10 - C30	C20	E01
All engines	->year 01/07/09, x 6, COIL ON PLUG, FOR: (J)						9.6358 C10		
All engines	01/08/09 ->, x 6, COIL ON PLUG, FOR: (J)						9.6437 C10		

				ENGINE
4.0	Petrol	191	01/10-06/14	1GR-FE

Engine	Information	A10	A20	A40	A50	A70	C10 - C30	C20	E01
All engines	x 6, COIL ON PLUG, FOR: (J)						9.6437 C10		

				ENGINE
4.0 4WD	Petrol	176	06/05-12/09	1GR-FE

Engine	Information	A10	A20	A40	A50	A70	C10 - C30	C20	E01
All engines	->year 01/08/09, x 6, COIL ON PLUG, FOR: (J)						9.6358 C10		
All engines	01/09/09 ->, x 6, COIL ON PLUG, FOR: (J)						9.6437 C10		

A10	CONDENSER	A20	CONTACT SET	A40	DISTRIBUTOR CAP	A50	ROTOR	A70	PICK-UP
C10	COIL	C20	IGNITION MODULE	C30	ELECTRONIC IGNITION KIT	E01	IGNITION CABLE SET		

The present application list is a brief version. For the detailed information about the possibility of installation on a specific vehicle, please refer to our web-catalogue http://catalogo.facet.eu/

Vehicle	alim.	kW	Date	Engine	FUNCTIONS ON THE VEHICLE A10	A20	A40	A50	A70	C10 - C30	C20	E01
4.0 4WD	Petrol	178	01/06-01/18	1GR-FE								
All engines	->year 01/07/09, x 6, COIL ON PLUG, FOR: (J)									9.6358 C10		
All engines	01/08/09 ->, x 6, COIL ON PLUG, FOR: (J)									9.6437 C10		
4.0 4WD	Petrol	191	01/10-06/14	1GR-FE								
All engines	x 6, COIL ON PLUG, FOR: (J)									9.6437 C10		
4.0 4WD	Petrol	203	06/05-01/18	1GR-FE								
All engines	->year 01/08/09, x 6, COIL ON PLUG, FOR: (J)									9.6358 C10		
All engines	01/09/09 ->, x 6, COIL ON PLUG, FOR: (J)									9.6437 C10		
FORTUNER												
2.7 4x4	Petrol	122	05/15->	2TR-FE								
All engines	x 4, COIL ON PLUG, FOR: (J)									9.6358 C10		
FUNCRUISER												
2.0 i 16V 4WD	Petrol	94	04/94->	3SFE								
All engines	version Denso						2.7630/37	3.7629				
All engines	->year 01/08/96									9.6098 C10		4.9793
All engines	FOR: (AUS)									9.6185S C10		
All engines	01/08/96 ->, 01/09/97 ->, FOR: (AUS)											4.9856
HIACE												
2.4 LPG	LPG	85	08/95-06/99	2RZE								
All engines	x 1, DISTRIBUTOR									9.6099 C10		
HIACE III												
1.8	Petrol	58	12/82-07/89	2Y								
All engines	version Denso						2.7630/32					
2.0	Petrol	65	12/82-08/89	3Y								
All engines	version Denso						2.7614	3.7614				
2.0 4WD	Petrol	65	08/87-07/89	3Y								
All engines	version Denso						2.7614	3.7614				
2.2	Petrol	69	09/87-08/89	4Y								
All engines	version Denso						2.7614	3.7614				
2.2 4WD	Petrol	69	08/87-08/89	4Y								
All engines	version Denso						2.7614	3.7614				
HIACE IV												
2.0	Petrol	74	08/89-08/04	1RZ								
All engines	->year 01/05/92, version Denso						2.7630/48	3.7629				
All engines										9.6099 C10		

A10	CONDENSER	A20	CONTACT SET	A40	DISTRIBUTOR CAP	A50	ROTOR	A70	PICK-UP
C10	COIL	C20	IGNITION MODULE	C30	ELECTRONIC IGNITION KIT	E01	IGNITION CABLE SET		

The present application list is a brief version. For the detailed information about the possibility of installation on a specific vehicle, please refer to our web-catalogue http://catalogo.facet.eu/

Vehicle	alim.	kW	Date	Engine	FUNCTIONS ON THE VEHICLE A10	A20	A40	A50	A70	C10 - C30	C20	E01
2.0	Petrol	81	11/96-10/00	**1RZ-E**								
Engine: All engines	Information:									9.6099 C10		
2.4	Petrol	85	08/89-12/04	**2RZE, 5YTD050W07**								
Engine: Eng. 2RZE	Information: x 1, DISTRIBUTOR									9.6099 C10		
Engine: Eng. 5YTD050W07	Information:									9.6099 C10		
2.4	Petrol	88	08/89-08/04	**5YTD050W07**								
Engine: All engines	Information: ->year 01/05/92, version Denso						2.7630/48	3.7629				
Engine: All engines	Information:									9.6098, 9.6099 C10		
2.4 4WD	Petrol	85	08/95-04/98	**2RZE**								
Engine: All engines	Information: x 1, DISTRIBUTOR									9.6099 C10		
2.4 4WD	Petrol	88	08/89-08/95	**5YTD050W07**								
Engine: All engines	Information: ->year 01/05/92, version Denso						2.7630/48	3.7629				
Engine: All engines	Information:									9.6098 C10		
2.7	Petrol	105	04/98-06/05	**3RZ-FE**								
Engine: All engines	Information: ->year 01/08/01											4.9792
2.7	Petrol	106	07/98-12/06	**3RZ-FE**								
Engine: All engines	Information: ->year 01/08/01											4.9792
2.7	Petrol	111	01/05->	**2TR-FE**								
Engine: All engines	Information: MADE BY: (GB), x 4, COIL ON PLUG, FOR: (J) MADE BY: (J), x 4, COIL ON PLUG, FOR: (J)									9.6358 C10		
2.7	Petrol	118	01/15->	**2TR-FE**								
Engine: All engines	Information: x 4, COIL ON PLUG, FOR: (J)									9.6358 C10		
2.7 4WD	Petrol	105	04/98-08/06	**3RZ-FE**								
Engine: All engines	Information: ->year 01/08/01											4.9792
2.7 4WD	Petrol	106	07/98-06/05	**3RZ-FE**								
Engine: All engines	Information: ->year 01/08/01											4.9792
2.7 VVTi	Petrol	111	01/05->	**2TR-FE**								
Engine: All engines	Information: x 4, COIL ON PLUG, FOR: (J)									9.6358 C10		
HIGHLANDER / KLUGER												
2.7	Petrol	138	09/16->	**1AR-FE**								
Engine: All engines	Information: x 4, COIL ON PLUG, FOR: (J)									9.6437 C10		
3.5 AWD	Petrol	183	09/14->	**2GR-FE, 2GR-FKS**								
Engine: All engines	Information: FOR: (J), x 6, COIL ON PLUG, x 6, COIL ON PLUG									9.6438 C10		

A10	CONDENSER	A20	CONTACT SET	A40	DISTRIBUTOR CAP	A50	ROTOR	A70	PICK-UP
C10	COIL	C20	IGNITION MODULE	C30	ELECTRONIC IGNITION KIT	E01	IGNITION CABLE SET		

The present application list is a brief version. For the detailed information about the possibility of installation on a specific vehicle, please refer to our web-catalogue http://catalogo.facet.eu/

Vehicle	alim.	kW	Date	Engine	FUNCTIONS ON THE VEHICLE							
					A10	A20	A40	A50	A70	C10 - C30	C20	E01

HILUX IV

				ENGINE
1.8	Petrol	58	08/83-03/89	2Y

Engine	Information	A10	A20	A40	A50	A70	C10 - C30		C20	E01
All engines	version Denso, no specific info conc. application available			2.7613, 2.7614						
All engines	->year 01/03/89, version Denso				3.7614					
All engines	YN5, YN6, 01/08/91 ->, FOR: (ZA), version Denso				3.7627					
All engines	01/03/89 ->, YN5, YN6, ->year 01/08/91, version Denso				3.7630					

				ENGINE
2.2	Petrol	69	08/83-12/89	4Y

Engine	Information	A10	A20	A40	A50	A70	C10 - C30		C20	E01
All engines	01/08/91 ->, FOR: (ZA), version Denso			2.7613	3.7627					
All engines	version Denso			2.7614						
All engines	->year 01/03/89, version Denso				3.7614					
All engines	01/03/89 ->, version Denso				3.7630					

				ENGINE
2.2 4WD	Petrol	69	11/85-12/89	4Y

Engine	Information	A10	A20	A40	A50	A70	C10 - C30		C20	E01
All engines	01/01/90 ->, version Denso			2.7613	3.7627					
All engines	->year 01/01/90, version Denso			2.7614						
All engines	->year 01/03/89, version Denso				3.7614					
All engines	01/03/89 ->, ->year 01/01/90, version Denso				3.7630					

				ENGINE
2.4 4WD	Petrol	75	10/88-12/97	22R

Engine	Information	A10	A20	A40	A50	A70	C10 - C30		C20	E01
All engines	->year 01/08/92, version Denso			2.7599						
All engines	01/08/92 ->, version Denso			2.7630/43						
All engines	01/08/92 ->						9.6103	C10		

HILUX V

				ENGINE
1.8	Petrol	61	09/88-06/98	2Y

Engine	Information	A10	A20	A40	A50	A70	C10 - C30		C20	E01
All engines	version Denso, no specific info conc. application available			2.7613, 2.7614						
All engines	->year 01/03/89, version Denso				3.7614					
All engines	YN5, YN6, 01/08/91 ->, FOR: (ZA), version Denso				3.7627					
All engines	01/03/89 ->, YN5, YN6, ->year 01/08/91, version Denso				3.7630					

				ENGINE
2.4 4WD	Petrol	75	10/88-08/97	22R

Engine	Information	A10	A20	A40	A50	A70	C10 - C30		C20	E01
All engines	->year 01/08/92, version Denso			2.7599						
All engines	01/08/92 ->, version Denso			2.7630/43						
All engines	01/08/92 ->						9.6103	C10		

				ENGINE
2.4 i 4WD	Petrol	84	01/89-07/97	22RE

Engine	Information	A10	A20	A40	A50	A70	C10 - C30		C20	E01
All engines	->year 01/08/92, version Denso			2.7599						
All engines	01/08/92 ->, version Denso			2.7630/43						
All engines	01/08/92 ->						9.6103	C10		

				ENGINE
3.0 4WD	Petrol	112	08/89-11/95	3VZ-E

Engine	Information	A10	A20	A40	A50	A70	C10 - C30		C20	E01
All engines	->year 01/08/91						9.6102	C10		
All engines	01/08/91 ->						9.6103	C10		

HILUX VI

				ENGINE
2.4 i 4WD	Petrol	103	08/97-10/05	2RZ-FE

Engine	Information	A10	A20	A40	A50	A70	C10 - C30		C20	E01
All engines										4.9792

A10	CONDENSER	A20	CONTACT SET	A40	DISTRIBUTOR CAP	A50	ROTOR	A70	PICK-UP
C10	COIL	C20	IGNITION MODULE	C30	ELECTRONIC IGNITION KIT	E01	IGNITION CABLE SET		

The present application list is a brief version. For the detailed information about the possibility of installation on a specific vehicle, please refer to our web-catalogue http://catalogo.facet.eu/

Vehicle	alim.	kW	Date	Engine	FUNCTIONS ON THE VEHICLE							
					A10	A20	A40	A50	A70	C10 - C30	C20	E01
HILUX VII												
2.0	Petrol	100	06/05-05/15	**1TR-FE**						9.6358 C10		
All engines	Qty: 4											
2.7	Petrol	118	02/05->	**2TR-FE**						9.6358 C10		
All engines	Qty: 4											
2.7 4WD	Petrol	118	08/05-05/15	**2TR-FE**						9.6358 C10		
All engines	Qty: 4											
4.0	Petrol	175	02/05->	**1GR-FE**						9.6358 C10		
All engines	Qty: 6											
4.0 4WD	Petrol	175	02/05->	**1GR-FE**						9.6358 C10		
All engines	Qty: 6											
IQ												
1.0	Petrol	50	01/09-12/15	**1KR-FE**						9.6359 C10		
All engines	x 3, COIL ON PLUG											
1.33	Petrol	69	01/09->	**1NR-FE**						9.6437 C10		
All engines	Qty: 4											
1.33	Petrol	72	01/09-12/15	**1NR-FE**						9.6437 C10		
All engines	x 4, COIL ON PLUG											
LAND CRUISER												
2.7	Petrol	112	09/02-08/04	**3RZ-FE**								4.9792
All engines	no specific info conc. application available											
2.7	Petrol	120	08/04->	**2TR-FE**						9.6358 C10		
All engines	Qty: 4											
4.0	Petrol	179	01/03-08/09	**1GR-FE**						9.6358 C10		
All engines	Qty: 6											
4.0 V6 VVTi	Petrol	203	08/09->	**1GR-FE**						9.6437 C10		
All engines	Qty: 6											
LAND CRUISER 120												
2.7	Petrol	120	11/03-02/10	**2TR-FE**						9.6358 C10		
All engines	x 4, COIL ON PLUG, FOR: (J)											
4.0	Petrol	179	09/02-08/10	**1GR-FE**						9.6358 C10		
All engines	x 6, COIL ON PLUG, FOR: (J)											

A10	CONDENSER	**A20**	CONTACT SET	**A40**	DISTRIBUTOR CAP	**A50**	ROTOR	**A70**	PICK-UP
C10	COIL	**C20**	IGNITION MODULE	**C30**	ELECTRONIC IGNITION KIT	**E01**	IGNITION CABLE SET		

The present application list is a brief version. For the detailed information about the possibility of installation on a specific vehicle, please refer to our web-catalogue http://catalogo.facet.eu/

Vehicle	alim.	kW	Date	Engine	FUNCTIONS ON THE VEHICLE							
					A10	A20	A40	A50	A70	C10 - C30	C20	E01
4.0	Petrol	183	12/02-12/10	1GR-FE								
All engines	x 6, COIL ON PLUG, FOR: (J)									9.6358 C10		
4.0 V6 VVT-i	Petrol	207	01/03-07/09	1GR-FE								
All engines	x 6, COIL ON PLUG, FOR: (J)									9.6358 C10		
LAND CRUISER 150												
4.0 V6 Dual VVTi	Petrol	205	08/09->	1GR-FE								
All engines	x 6, COIL ON PLUG, FOR: (J)									9.6437 C10		
4.0 V6 VVTi	Petrol	183	11/12->	1GR-FE								
All engines	x 6, COIL ON PLUG, FOR: (J)									9.6437 C10		
4.0 V6 VVTi	Petrol	202	08/09->	1GR-FE								
All engines	x 6, COIL ON PLUG, FOR: (J)									9.6437 C10		
4.0 V6 VVTi	Petrol	203	01/10->	1GR-FE								
All engines	Qty: 6									9.6437 C10		
4.0 V6 VVT-i	Petrol	207	08/09->	1GR-FE								
All engines	x 6, COIL ON PLUG, FOR: (J)									9.6437 C10		
LAND CRUISER 200												
4.0	Petrol	176	01/10->	1GR-FE								
All engines	->year 31/01/12, Qty: 6									9.6358 C10		
All engines	01/02/12 ->, Qty: 6									9.6437 C10		
4.6 V8	Petrol	227	09/10->	1UR-FE								
All engines	x 8, COIL ON PLUG, FOR: (J)									9.6437 C10		
4.6 V8	Petrol	234	01/12->	1UR-FE								
All engines	x 8, COIL ON PLUG, FOR: (J)									9.6437 C10		
5.7 V8	Petrol	270	09/11-07/15	3UR-FE								
All engines	Qty: 8									9.6437 C10		
5.7 V8	Petrol	284	08/07->	3UR-FE								
All engines	Qty: 8									9.6437 C10		
LAND CRUISER 70												
2.4	Petrol	77	11/84-05/93	22R								
All engines	version Denso						2.7599	3.7627				
2.4	Petrol	81	11/84-05/93	22R								
All engines	version Denso						2.7599	3.7627				

A10	CONDENSER	A20	CONTACT SET	A40	DISTRIBUTOR CAP	A50	ROTOR	A70	PICK-UP
C10	COIL	C20	IGNITION MODULE	C30	ELECTRONIC IGNITION KIT	E01	IGNITION CABLE SET		

The present application list is a brief version. For the detailed information about the possibility of installation on a specific vehicle, please refer to our web-catalogue http://catalogo.facet.eu/

Vehicle	alim.	kW	Date	Engine	FUNCTIONS ON THE VEHICLE							
					A10	A20	A40	A50	A70	C10 - C30	C20	E01
2.4	Petrol	84	12/88-12/96	ENGINE 22RE								
Engine: All engines	Information: version Denso						2.7599					
LAND CRUISER 80												
4.0	Petrol	115	01/90-10/92	ENGINE 3F-E								
Engine: All engines										9.6102 C10		
4.5	Petrol	215	08/92-01/98	ENGINE 1FZ-FE								
Engine: All engines	Information: version Denso						2.7630/42					
Engine: All engines										9.6185S C10		
4.5 24V	Petrol	151	08/92-12/97	ENGINE 1FZ-FE								
Engine: All engines	Information: version Denso						2.7630/42					
Engine: All engines										9.6185S C10		
LAND CRUISER 90												
2.7	Petrol	110	06/95-08/02	ENGINE 3RZ-FE								
Engine: All engines	Information: x 1, DISTRIBUTOR									9.6098 C10		
LITEACE												
1.5	Petrol	51	10/85-09/91	ENGINE 5K								
Engine: All engines	Information: version Denso						2.7614	3.7614				
1.5	Petrol	52	07/89-01/95	ENGINE 5K								
Engine: All engines	Information: version Denso						2.7614	3.7614				
Engine: All engines										9.6103 C10		
2.2	Petrol	72	01/92-01/95	ENGINE 4Y-EC								
Engine: All engines	Information: version Denso						2.7613	3.7627				
Engine: All engines										9.6097 C10		
MATRIX												
1.8	Petrol	97	01/08-05/14	ENGINE 2ZR-FE								
Engine: All engines	Information: x 4, COIL ON PLUG									9.6436 C10		
2.4	Petrol	117	01/08-05/14	ENGINE 2AZ-FE								
Engine: All engines	Information: 01/01/11 ->, FOR: (USA), NOT FOR: (USA), x 4, COIL ON PLUG									9.6358 C10		
Engine: All engines	Information: ->year 01/12/10, x 4, COIL ON PLUG, FOR: (J)									9.6366 C10		
2.4 4WD	Petrol	117	01/09-12/10	ENGINE 2AZ-FE								
Engine: All engines	Information: x 4, COIL ON PLUG, FOR: (J)									9.6366 C10		
MODEL F												
2.0	Petrol	66	08/88-01/90	ENGINE 3Y								
Engine: All engines	Information: version Denso						2.7613	3.7627				

A10	CONDENSER	A20	CONTACT SET	A40	DISTRIBUTOR CAP	A50	ROTOR	A70	PICK-UP
C10	COIL	C20	IGNITION MODULE	C30	ELECTRONIC IGNITION KIT	E01	IGNITION CABLE SET		

The present application list is a brief version. For the detailed information about the possibility of installation on a specific vehicle, please refer to our web-catalogue http://catalogo.facet.eu/

Vehicle	alim.	kW	Date	Engine	FUNCTIONS ON THE VEHICLE A10	A20	A40	A50	A70	C10 - C30	C20	E01
2.2	Petrol	72	08/85-01/90	4Y-EC								
Engine	Information											
All engines	version Denso						2.7613	3.7627				
All engines										9.6097 C10		
MR 2 I												
1.6 16V	Petrol	85	11/84-06/90	4A-GELC								
Engine	Information											
All engines	version Denso						2.7619	3.7629				
1.6 Supercharged	Petrol	107	08/86-12/89	4A-GZE								
Engine	Information											
All engines	version Denso						2.7619	3.7629				
MR 2 II												
2.0	Petrol	88	12/89-08/92	3S-FE								
Engine	Information											
All engines	version Denso							3.7636				
All engines										9.6103 C10		
2.0 16V	Petrol	115	12/89-09/99	3S-GE								
Engine	Information											
All engines	->year 01/12/91, version Denso						2.7630/21					
All engines	version Denso							3.7636				
All engines	->year 01/12/91									9.6102 C10		
All engines	01/12/91 ->									9.6103 C10		
2.0 16V	Petrol	125	12/89-05/00	3S-GE								
Engine	Information											
All engines	->year 01/12/91, version Denso						2.7630/21					
All engines	version Denso							3.7636				
All engines	->year 01/12/91									9.6102 C10		
All engines	01/12/91 ->									9.6103 C10		
2.0 16V	Petrol	129	12/89-07/99	3S-GE								
Engine	Information											
All engines	->year 01/12/91, version Denso						2.7630/21					
All engines	version Denso							3.7636				
All engines	->year 01/12/91									9.6102 C10		
All engines	01/12/91 ->									9.6103 C10		
2.0 Turbo	Petrol	167	12/89-07/99	3S-GTE								
Engine	Information											
All engines	->year 01/01/92, version Denso						2.7630/21					
All engines	version Denso							3.7636				
All engines	->year 01/01/92									9.6102 C10		
All engines	01/01/92 ->									9.6103 C10		
2.2 16V	Petrol	97	01/90-06/95	5S-FE								
Engine	Information											
All engines	01/01/92 ->, version Denso						2.7630/37					
All engines	version Denso							3.7629				
All engines	01/01/92 ->									9.6098 C10		
All engines	->year 01/01/92									9.6103 C10		
All engines	01/09/93 ->											4.9793
MR 2 III												
1.8 16V VT-i	Petrol	103	10/99-06/07	1ZZFE								
Engine	Information											
All engines	x 4, COIL ON PLUG									9.6361 C10		

A10	CONDENSER	A20	CONTACT SET	A40	DISTRIBUTOR CAP	A50	ROTOR	A70	PICK-UP
C10	COIL	C20	IGNITION MODULE	C30	ELECTRONIC IGNITION KIT	E01	IGNITION CABLE SET		

The present application list is a brief version. For the detailed information about the possibility of installation on a specific vehicle, please refer to our web-catalogue http://catalogo.facet.eu/

Vehicle	alim.	kW	Date	Engine	FUNCTIONS ON THE VEHICLE							
					A10	A20	A40	A50	A70	C10 - C30	C20	E01
PASEO												
				ENGINE								
1.5	Petrol	66	08/95-06/99	5E-FE								
Engine	Information						2.7630/35					
All engines	version Denso											
All engines	FOR: (EU)									9.6099 C10		
All engines	FOR: (EU), x 1, DISTRIBUTOR									9.6099 C10		
All engines	01/09/94 ->, FOR: (EU)											4.9435
				ENGINE								
1.5	Petrol	74	06/90-08/95	5E-FE								
Engine	Information						2.7630/35	3.7629				
All engines	version Denso									9.6098 C10		
All engines	->year 01/08/95											4.9435
All engines	01/09/94 ->											
				ENGINE								
1.5 EFi	Petrol	66	01/97-12/99	5E-FE								
Engine	Information									9.6099 C10		
All engines	x 1, DISTRIBUTOR											
PICNIC I												
				ENGINE								
2.0	Petrol	90	06/00-12/01	3S-FE								
Engine	Information											4.9856
All engines												
				ENGINE								
2.0 16V	Petrol	94	08/96-09/00	3S-FE								
Engine	Information											4.9856
All engines												
PICNIC II												
				ENGINE								
2.0 VVTi	Petrol	110	05/01-08/06	1AZ-FE								
Engine	Information									9.6366 C10		
All engines	Qty: 4											
				ENGINE								
2.4 VVTi	Petrol	115	11/03-08/06	2AZ-FE								
Engine	Information									9.6366 C10		
All engines	Qty: 4											
PREVIA I												
				ENGINE								
2.4	Petrol	97	05/90-08/00	2TZ-FE								
Engine	Information						2.7630/22	3.7636				
All engines	version Denso									9.6222 C10		
All engines												
				ENGINE								
2.4 4WD	Petrol	110	05/90-12/99	2TZ-FZE								
Engine	Information						2.7630/22	3.7636				
All engines	version Denso									9.6222 C10		
All engines												
				ENGINE								
2.4 4WD	Petrol	97	01/90-08/00	2TZ-FE								
Engine	Information						2.7630/22	3.7636				
All engines	version Denso									9.6222 C10		
All engines												
PREVIA II												
				ENGINE								
2.4	Petrol	115	02/00-02/06	2AZ-FE								
Engine	Information									9.6366 C10		
All engines	x 4, COIL ON PLUG, FOR: (J)											
PREVIA III												
				ENGINE								
2.4	Petrol	125	10/05->	2AZ-FE								
Engine	Information									9.6366 C10		
All engines	x 4, COIL ON PLUG, FOR: (J)											

A10	CONDENSER	**A20**	CONTACT SET	**A40**	DISTRIBUTOR CAP	**A50**	ROTOR	**A70**	PICK-UP
C10	COIL	**C20**	IGNITION MODULE	**C30**	ELECTRONIC IGNITION KIT	**E01**	IGNITION CABLE SET		

The present application list is a brief version. For the detailed information about the possibility of installation on a specific vehicle, please refer to our web-catalogue http://catalogo.facet.eu/

Vehicle	alim.	kW	Date	Engine	FUNCTIONS ON THE VEHICLE A10	A20	A40	A50	A70	C10 - C30	C20	E01
3.5	Petrol	202	01/06->	2GR-FE								
Engine: All engines	Information: Qty: 6									9.6438 C10		
3.5	Petrol	206	01/06->	2GR-FE								
Engine: All engines	Information: Qty: 6									9.6438 C10		
Engine: All engines	Information: x 6, COIL ON PLUG									9.6438 C10		
3.5 4WD	Petrol	206	01/06->	2GR-FE								
Engine: All engines	Information: Qty: 6									9.6438 C10		
PRIUS												
1.8 Plug-In Hybrid	Diesel/ Electro	73	01/12->	2ZR-FXE								
Engine: All engines	Information: x 4, COIL ON PLUG									9.6436 C10		
PRIUS C												
1.5 Hybrid	Petrol/ Electric	54	12/11->	1NZ-FXE								
Engine: All engines	Information: Qty: 4									9.6359 C10		
PRIUS I												
1.5 Hybrid	Petrol/ Electric	53	05/00-01/04	1NZ-FXE								
Engine: All engines	Information: x 4, COIL ON PLUG									9.6359 C10		
PRIUS II												
1.5 Hybrid	Petrol/ Electric	107	09/03-03/09	1NZ-FXE								
Engine: All engines	Information: x 4, COIL ON PLUG									9.6359 C10		
1.5 Hybrid	Petrol/ Electric	57	09/03-12/09	1NZ-FXE								
Engine: All engines	Information: x 4, COIL ON PLUG									9.6359 C10		
PRIUS III												
1.8 Hybrid	Petrol/ Electric	0	12/11->	5ZR-FXE								
Engine: All engines	Information: Qty: 4									9.6436 C10		
1.8 Hybrid	Petrol/ Electric	100	06/08->	2ZR-FXE								
Engine: All engines	Information: x 4, COIL ON PLUG									9.6436 C10		
1.8 Hybrid	Petrol/ Electric	73	06/08->	2ZR-FXE								
Engine: All engines	Information: x 4, COIL ON PLUG									9.6436 C10		
PRIUS PLUS												
1.8 Hybrid	Petrol/ Electric	73	11/14->	2ZR-FXE								
Engine: All engines	Information: x 4, COIL ON PLUG									9.6436 C10		

A10	CONDENSER	A20	CONTACT SET	A40	DISTRIBUTOR CAP	A50	ROTOR	A70	PICK-UP
C10	COIL	C20	IGNITION MODULE	C30	ELECTRONIC IGNITION KIT	E01	IGNITION CABLE SET		

The present application list is a brief version. For the detailed information about the possibility of installation on a specific vehicle, please refer to our web-catalogue http://catalogo.facet.eu/

Vehicle	alim.	kW	Date	Engine	FUNCTIONS ON THE VEHICLE A10	A20	A40	A50	A70	C10 - C30	C20	E01

RAV 4

				ENGINE
2.0 VVTi 4WD	Petrol	111	12/12-11/18	3ZR-FAE

Engine	Information	A10	A20	A40	A50	A70	C10 - C30		C20	E01
All engines	x 4, COIL ON PLUG						9.6436	C10		

				ENGINE
2.0 VVTi 4WD	Petrol	112	12/12-11/18	3ZR-FAE

Engine	Information	A10	A20	A40	A50	A70	C10 - C30		C20	E01
All engines	x 4, COIL ON PLUG						9.6436	C10		

RAV 4 I

				ENGINE
2.0	Petrol	99	06/97-09/99	3S-FE

Engine	Information	A10	A20	A40	A50	A70	C10 - C30		C20	E01
All engines	version Denso			2.7630/37	3.7629					
All engines	FOR: (EU), Country Version : General countries:, ->year 01/08/96, Hardtop						9.6098	C10		
All engines	FOR: (AUS)						9.6185S	C10		
All engines	FOR: (EU), Country Version : General countries:, ->year 01/08/96									4.9793
All engines	FOR: (EU), Country Version : General countries:, 01/08/96 ->									4.9856

				ENGINE
2.0 4WD	Petrol	94	12/97-06/00	3S-FE

Engine	Information	A10	A20	A40	A50	A70	C10 - C30		C20	E01
All engines	version Denso			2.7630/37	3.7629					
All engines	FOR: (EU), Country Version : General countries:, ->year 01/08/96, Hardtop						9.6098	C10		
All engines	FOR: (AUS)						9.6185S	C10		
All engines	FOR: (EU), Country Version : General countries:, ->year 01/08/96									4.9793
All engines	01/08/96 ->									4.9856

				ENGINE
2.0 4WD	Petrol	95	06/94-06/00	3S-FE

Engine	Information	A10	A20	A40	A50	A70	C10 - C30		C20	E01
All engines	version Denso			2.7630/37	3.7629					
All engines	FOR: (EU), Country Version : General countries:, ->year 01/08/96, Hardtop						9.6098	C10		
All engines	FOR: (AUS)						9.6185S	C10		
All engines	FOR: (EU), Country Version : General countries:, ->year 01/08/96									4.9793
All engines	FOR: (EU), Country Version : General countries:, 01/08/96 ->									4.9856

				ENGINE
2.0 4WD	Petrol	99	01/94-09/99	3S-FE

Engine	Information	A10	A20	A40	A50	A70	C10 - C30		C20	E01
All engines	version Denso			2.7630/37	3.7629					
All engines	FOR: (EU), Country Version : General countries:, ->year 01/08/96, Hardtop						9.6098	C10		
All engines	FOR: (AUS)						9.6185S	C10		
All engines	FOR: (EU), Country Version : General countries:, ->year 01/08/96									4.9793
All engines	FOR: (EU), Country Version : General countries:, 01/08/96 ->									4.9856

RAV 4 II

				ENGINE
1.8	Petrol	92	08/00-11/05	1ZZFE

Engine	Information	A10	A20	A40	A50	A70	C10 - C30		C20	E01
All engines	x 4, COIL ON PLUG						9.6361	C10		

				ENGINE
2.0	Petrol	110	09/00-12/03	1AZ-FE

Engine	Information	A10	A20	A40	A50	A70	C10 - C30		C20	E01
All engines	x 4, COIL ON PLUG, FOR: (J)						9.6366	C10		

				ENGINE
2.0 4WD	Petrol	110	05/00-11/05	1AZ-FE

Engine	Information	A10	A20	A40	A50	A70	C10 - C30		C20	E01
All engines	x 4, COIL ON PLUG, FOR: (J)						9.6366	C10		

A10	CONDENSER	A20	CONTACT SET	A40	DISTRIBUTOR CAP	A50	ROTOR	A70	PICK-UP
C10	COIL	C20	IGNITION MODULE	C30	ELECTRONIC IGNITION KIT	E01	IGNITION CABLE SET		

The present application list is a brief version. For the detailed information about the possibility of installation on a specific vehicle, please refer to our web-catalogue http://catalogo.facet.eu/

Vehicle	alim.	kW	Date	Engine	FUNCTIONS ON THE VEHICLE							
					A10	A20	A40	A50	A70	C10 - C30	C20	E01
2.4 4WD	Petrol	112	08/03-11/05	**2AZ-FE**								
All engines	Qty: 4									9.6366 C10		
All engines	x 4, COIL ON PLUG, FOR: (J)									9.6366 C10		
RAV 4 III												
2.0	Petrol	109	03/09-06/13	**3ZR-FAE**								
All engines	x 4, COIL ON PLUG									9.6436 C10		
2.0	Petrol	116	12/08-06/13	**3ZR-FAE**								
All engines	x 4, COIL ON PLUG									9.6436 C10		
2.0 4WD	Petrol	109	03/09-06/13	**3ZR-FAE**								
All engines	x 4, COIL ON PLUG									9.6436 C10		
2.0 4WD	Petrol	112	02/06-06/13	**1AZ-FE**								
All engines	x 4, COIL ON PLUG, FOR: (J)									9.6366 C10		
2.0 4WD	Petrol	116	12/08-06/13	**3ZR-FAE**								
All engines	x 4, COIL ON PLUG									9.6436 C10		
2.0 VVT-i [CHN]	Petrol	112	03/09->	**1AZ-FE**								
All engines	Qty: 4									9.6358 C10		
2.4	Petrol	125	11/05-12/13	**2AZ-FE**								
All engines	x 4, COIL ON PLUG, FOR: (J)									9.6366 C10		
2.4 4WD	Petrol	125	11/05-06/13	**2AZ-FE**								
All engines	x 4, COIL ON PLUG, FOR: (J)									9.6366 C10		
2.4 VVTi [CHN]	Petrol	125	03/09->	**2AR-FE**								
All engines	Qty: 4									9.6358 C10		
2.5	Petrol	133	12/08->	**2AR-FE**								
All engines	Qty: 4									9.6437 C10		
3.5 4WD	Petrol	201	11/05-12/12	**2GR-FE**								
All engines	x 6, COIL ON PLUG									9.6438 C10		
3.5 4WD	Petrol	206	08/07->	**2GR-FE**								
All engines	Qty: 6									9.6438 C10		
RAV 4 IV												
2.0	Petrol	105	12/12->	**3ZR-FE**								
All engines	x 4, COIL ON PLUG									9.6436 C10		

A10	CONDENSER	**A20**	CONTACT SET	**A40**	DISTRIBUTOR CAP	**A50**	ROTOR	**A70**	PICK-UP
C10	COIL	**C20**	IGNITION MODULE	**C30**	ELECTRONIC IGNITION KIT	**E01**	IGNITION CABLE SET		

The present application list is a brief version. For the detailed information about the possibility of installation on a specific vehicle, please refer to our web-catalogue http://catalogo.facet.eu/

Vehicle	alim.	kW	Date	Engine	FUNCTIONS ON THE VEHICLE							
					A10	A20	A40	A50	A70	C10 - C30	C20	E01
2.0	Petrol	107	12/12->	3ZR-FE						9.6436 C10		
2.0 4WD	Petrol	107	12/12->	3ZR-FE						9.6436 C10		
2.0 4WD	Petrol	111	12/12->	3ZR-FAE						9.6436 C10		
2.0 4WD	Petrol	112	04/15->	3ZR-FAE						9.6436 C10		
2.5	Petrol	132	12/12-11/18	2AR-FE						9.6437 C10		
2.5 4WD	Petrol	131	12/12-12/18	2AR-FE						9.6437 C10		
2.5 4WD	Petrol	132	12/12->	2AR-FE						9.6437 C10		
2.5 Hybrid	Petrol/ Electric	114	10/15-11/18	2AR-FXE						9.6437 C10		
2.5 Hybrid	Petrol/ Electric	145	11/15-11/18	2AR-FXE						9.6437 C10		
2.5 Hybrid 4WD	Petrol/ Electric	114	10/15-12/18	2AR-FXE						9.6437 C10		
SIENNA												
2.7	Petrol	140	09/10-07/13	1AR-FE						9.6437 C10		
3.5	Petrol	196	02/10->	2GR-FE						9.6438 C10		
3.5	Petrol	198	01/10->	2GR-FE						9.6438 C10		
3.5 4WD	Petrol	196	01/10->	2GR-FE						9.6438 C10		

Engine	Information
All engines	x 4, COIL ON PLUG
All engines	Qty: 4
All engines	x 4, COIL ON PLUG, FOR: (J)
All engines	x 6, COIL ON PLUG

A10	CONDENSER	**A20**	CONTACT SET	**A40**	DISTRIBUTOR CAP	**A50**	ROTOR	**A70**	PICK-UP
C10	COIL	**C20**	IGNITION MODULE	**C30**	ELECTRONIC IGNITION KIT	**E01**	IGNITION CABLE SET		

The present application list is a brief version. For the detailed information about the possibility of installation on a specific vehicle, please refer to our web-catalogue http://catalogo.facet.eu/

Vehicle	alim.	kW	Date	Engine	FUNCTIONS ON THE VEHICLE A10	A20	A40	A50	A70	C10 - C30	C20	E01
3.5 4WD	Petrol	198	01/10->	2GR-FE								
Engine	Information											
All engines	x 6, COIL ON PLUG									9.6438 C10		
STARLET												
1.0	Petrol	33	02/78-09/84	6A25BFXS								
All engines								3.7514RS				
1.0	Petrol	40	12/89-12/92	1E								
All engines	->year 01/01/92, version Denso						2.7630/10	3.7614				
All engines	01/01/92 ->, version Denso						2.7630/45					
All engines	01/01/92 ->									9.6099 C10		4.9393
1.2 S	Petrol	39	10/78-08/82	3K-H								
All engines								3.7514RS				
1.3	Petrol	55	01/96-07/99	2E, 4E-FE								
Eng. 4E-FE	version Denso						2.7630/35	3.7629				
All engines	x 1, DISTRIBUTOR									9.6099 C10		
Eng. 4E-FE												4.9435
1.3	Petrol	63	01/96-07/99	4E-FE								
All engines	version Denso						2.7630/35	3.7629				
All engines										9.6099 C10		4.9435
1.3 12V	Petrol	55	12/89-12/92	2E, 2E-E								
All engines	->year 01/06/91, version Denso						2.7622					
All engines	01/06/91 ->, version Denso						2.7630/45					
All engines	version Denso							3.7629				
All engines										9.6099 C10		4.9823
1.3 12V Cat	Petrol	55	12/89-03/96	2E-E								
All engines	->year 01/06/91, version Denso						2.7622					
All engines	01/06/91 ->, version Denso						2.7630/45					
All engines	version Denso							3.7629				
All engines										9.6099 C10		4.9823
1.3 XL	Petrol	52	12/89-12/91	2E								
All engines	version Denso						2.7622	3.7629				
All engines										9.6099 C10		4.9823
STOUT												
2.2	Petrol	69	04/88-02/00	4Y								
All engines	version Denso						2.7614					
All engines	->year 01/03/89							3.7614				
All engines	01/03/89 ->							3.7630				
SUPRA												
2.0	Petrol	145	06/19->	B48L								
All engines	x 4, COIL ON PLUG									9.6532 C10		

A10	CONDENSER	A20	CONTACT SET	A40	DISTRIBUTOR CAP	A50	ROTOR	A70	PICK-UP
C10	COIL	C20	IGNITION MODULE	C30	ELECTRONIC IGNITION KIT	E01	IGNITION CABLE SET		

The present application list is a brief version. For the detailed information about the possibility of installation on a specific vehicle, please refer to our web-catalogue http://catalogo.facet.eu/

Vehicle	alim.	kW	Date	Engine	FUNCTIONS ON THE VEHICLE A10	A20	A40	A50	A70	C10 - C30	C20	E01
2.0	Petrol	190	06/19->	B48H								
Engine: All engines — Information: x 4, COIL ON PLUG										9.6532 C10		
3.0 GR	Petrol	250	03/19->	B58								
Engine: All engines — Information: x 6, COIL ON PLUG										9.6532 C10		
3.0 i	Petrol	168	05/93-07/02	2JZ-GE								
Engine: All engines — Information:										9.6103 C10		
T100												
3.0 i [USA]	Petrol	105	08/92-08/94	3VZE								
Engine: All engines — Information:										9.6103 C10		
TARAGO MPV / SPACE												
2.4 VVTi	Petrol	115	02/00-12/05	2AZ-FE								
Engine: All engines — Information: CVT, Qty: 4										9.6358 C10		
Engine: All engines — Information: Qty: 4										9.6366 C10		
TERCEL												
1.5	Petrol	52	08/83-05/85	3A-C								
Engine: All engines — Information:										9.6097 C10		
1.5 4WD	Petrol	50	09/82-01/88	3A-C								
Engine: All engines — Information:										9.6097 C10		
1.5 i [USA]	Petrol	0	01/89->	3EE								
Engine: All engines — Information: version Denso							2.7630/45	3.7629				
Engine: All engines — Information: ->year 01/12/90										9.6097 C10		
Engine: All engines — Information: 01/12/90 ->										9.6098 C10		
Engine: All engines — Information:												4.9393
TRUCK												
2.4	Petrol	84	08/88-11/95	22RE								
Engine: All engines — Information: 01/08/92 ->										9.6103 C10		
2.4 i [USA]	Petrol	0	01/88->	22R, 22RE								
Engine: All engines — Information: ->year 01/08/92, version Denso							2.7599					
Engine: Eng. 22RE — Information: 01/08/92 ->, version Denso							2.7630/43					
Engine: Eng. 22R — Information: version Denso								3.7627				
Engine: Eng. 22RE — Information: 01/08/92 ->										9.6103 C10		
3.0	Petrol	105	08/88-11/95	3VZ-E								
Engine: All engines — Information: ->year 01/08/91										9.6102 C10		
Engine: All engines — Information: 01/08/91 ->										9.6103 C10		
3.0 i [USA]	Petrol	0	01/88->	3VZ-E								
Engine: All engines — Information: ->year 01/08/91										9.6102 C10		
Engine: All engines — Information: 01/08/91 ->										9.6103 C10		

A10	CONDENSER	A20	CONTACT SET	A40	DISTRIBUTOR CAP	A50	ROTOR	A70	PICK-UP
C10	COIL	C20	IGNITION MODULE	C30	ELECTRONIC IGNITION KIT	E01	IGNITION CABLE SET		

The present application list is a brief version. For the detailed information about the possibility of installation on a specific vehicle, please refer to our web-catalogue http://catalogo.facet.eu/

Vehicle	alim.	kW	Date	Engine	FUNCTIONS ON THE VEHICLE							
					A10	A20	A40	A50	A70	C10 - C30	C20	E01
URBAN CRUISER												
1.33	Petrol	73	01/09-03/16	1NR-FE						9.6437 C10		
All engines	x 4, COIL ON PLUG											
1.33	Petrol	74	04/09-03/16	1NR-FE						9.6437 C10		
All engines	x 4, COIL ON PLUG											
VENZA												
2.7	Petrol	136	11/08-11/16	1AR-FE						9.6437 C10		
All engines	x 4, COIL ON PLUG, FOR: (J)											
2.7 4WD	Petrol	135	11/08-04/12	1AR-FE						9.6437 C10		
All engines	x 4, COIL ON PLUG, FOR: (J)											
2.7 4WD	Petrol	136	11/08-11/16	1AR-FE						9.6437 C10		
All engines	x 4, COIL ON PLUG, FOR: (J)											
3.5	Petrol	200	11/08-11/16	2GR-FE						9.6438 C10		
All engines	MADE BY: (J), x 6, COIL ON PLUG, x 6, COIL ON PLUG											
3.5 4WD	Petrol	200	11/08-11/16	2GR-FE						9.6438 C10		
All engines	MADE BY: (J), x 6, COIL ON PLUG, x 6, COIL ON PLUG											
VERSO												
1.6	Petrol	81	04/09-08/18	1ZR-FAE						9.6436 C10		
All engines	x 4, COIL ON PLUG											
1.6	Petrol	97	04/09-08/18	1ZR-FAE						9.6436 C10		
All engines	x 4, COIL ON PLUG											
1.8	Petrol	108	04/09-08/18	2ZR-FAE						9.6436 C10		
All engines	x 4, COIL ON PLUG											
VVTi	Petrol	108	04/09-08/18	2ZR-FAE						9.6436 C10		
All engines	x 4, COIL ON PLUG											
VVTi	Petrol	97	04/09-08/18	1ZR-FAE						9.6436 C10		
All engines	x 4, COIL ON PLUG											
VERSO S												
1.33	Petrol	70	11/10-10/16	1NR-FE						9.6437 C10		
All engines	Qty: 4											
VIOS / YARIS												
1.0	Petrol	52	09/05-10/13	1KR-FE						9.6361 C10		
All engines	Qty: 3											

A10	CONDENSER	A20	CONTACT SET	A40	DISTRIBUTOR CAP	A50	ROTOR	A70	PICK-UP
C10	COIL	C20	IGNITION MODULE	C30	ELECTRONIC IGNITION KIT	E01	IGNITION CABLE SET		

The present application list is a brief version. For the detailed information about the possibility of installation on a specific vehicle, please refer to our web-catalogue http://catalogo.facet.eu/

Vehicle	alim.	kW	Date	Engine	FUNCTIONS ON THE VEHICLE A10	A20	A40	A50	A70	C10 - C30	C20	E01
1.3	Petrol	64	09/05-10/13	2NZ-FE, 2SZ-FE						9.6359 C10		
Engine: All engines — Information: Qty: 4												
1.3 4WD	Petrol	64	09/05-04/13	2NZ-FE						9.6359 C10		
Engine: All engines — Information: Qty: 4												
1.5	Petrol	81	08/07->	1NZ-FE						9.6359 C10		
Engine: All engines — Information: Qty: 4												
YARIS I												
1.0	Petrol	48	03/03-09/05	1SZ-FE						9.6359 C10		
Engine: All engines — Information: Yaris, x 4, COIL ON PLUG												
1.0	Petrol	50	04/99-09/05	1SZ-FE						9.6359 C10		
Engine: All engines — Information: Yaris, x 4, COIL ON PLUG												
1.3	Petrol	63	08/99-11/05	2NZ-FE						9.6359 C10		
Engine: All engines — Information: Yaris, x 4, COIL ON PLUG												
1.3	Petrol	64	04/02-09/05	2SZ-FE						9.6359 C10		
Engine: All engines — Information: Yaris, x 4, COIL ON PLUG												
1.5	Petrol	110	03/00-07/05	1NZ-FE						9.6359 C10		
Engine: All engines — Information: Qty: 4												
1.5	Petrol	77	01/03-11/05	1NZ-FE						9.6359 C10		
Engine: All engines — Information: Yaris, x 4, COIL ON PLUG												
1.5	Petrol	78	04/01-09/05	1NZ-FE						9.6359 C10		
Engine: All engines — Information: Yaris, x 4, COIL ON PLUG												
YARIS II												
1.0 GPL	Petrol/ Liquified Petro-leum Gas (LPG)	51	01/06-12/11	1KR-FE						9.6361 C10		
Engine: All engines — Information: Yaris, x 3, COIL ON PLUG												
1.0 VVT-i	Petrol	51	08/05-12/11	1KR-FE						9.6361 C10		
Engine: All engines — Information: Yaris, x 3, COIL ON PLUG												
1.3 4WD	Petrol	64	08/07-11/10	2NZ-FE						9.6359 C10		
Engine: All engines — Information: Qty: 4												
1.3 VVT-i	Petrol	63	11/05-12/12	2NZ-FE, 2SZ-FE						9.6359 C10		
Engine: All engines — Information: Qty: 4												

A10	CONDENSER	A20	CONTACT SET	A40	DISTRIBUTOR CAP	A50	ROTOR	A70	PICK-UP
C10	COIL	C20	IGNITION MODULE	C30	ELECTRONIC IGNITION KIT	E01	IGNITION CABLE SET		

The present application list is a brief version. For the detailed information about the possibility of installation on a specific vehicle, please refer to our web-catalogue http://catalogo.facet.eu/

Vehicle	alim.	kW	Date	Engine	FUNCTIONS ON THE VEHICLE							
					A10	A20	A40	A50	A70	C10 - C30	C20	E01
1.3 VVT-i	Petrol	64	08/05-11/10	ENGINE 2SZ-FE								
Engine: All engines	Information: Yaris, x 4, COIL ON PLUG									9.6359 C10		
1.33 VVT-i	Petrol	73	07/10-05/11	ENGINE 1NR-FE								
Engine: All engines	Information: Yaris, x 4, COIL ON PLUG									9.6437 C10		
1.33 VVT-i	Petrol	74	11/08-12/11	ENGINE 1NR-FE								
Engine: All engines	Information: Yaris, x 4, COIL ON PLUG									9.6437 C10		
1.5	Petrol	80	11/05->	ENGINE 1NZ-FE								
Engine: All engines	Information: Qty: 4									9.6359 C10		
1.5	Petrol	81	11/05->	ENGINE 1NZ-FE								
Engine: All engines	Information: Qty: 4									9.6359 C10		
1.6 [CHN]	Petrol	0	05/08->	ENGINE 1ZR-FE								
Engine: All engines	Information: Qty: 4, no specific info conc. application available									9.6436 C10		
1.8 VVTi	Petrol	98	01/07-12/11	ENGINE 2ZR-FE								
Engine: All engines	Information: Yaris, x 4, COIL ON PLUG									9.6436 C10		
YARIS III												
1.0	Petrol	51	12/10->	ENGINE 1KR-FE								
Engine: All engines	Information: Yaris, x 3, COIL ON PLUG									9.6361 C10		
1.0 VVTi	Petrol	51	07/14->	ENGINE 1KR-FE								
Engine: All engines	Information: Yaris, x 3, COIL ON PLUG, FOR: (J)									9.6359 C10		
1.3	Petrol	63	12/11->	ENGINE 2NZ-FE								
Engine: All engines	Information: Qty: 4									9.6359 C10		
1.3	Petrol	73	09/11->	ENGINE 1NR-FE								
Engine: All engines	Information: Yaris, x 4, COIL ON PLUG									9.6437 C10		
1.3 4WD	Petrol	70	12/10->	ENGINE 1NR-FE								
Engine: All engines	Information: Qty: 4									9.6437 C10		
1.3 VVTi	Petrol	73	10/12->	ENGINE 1NR-FE								
Engine: All engines	Information: Yaris, x 4, COIL ON PLUG									9.6437 C10		
1.5	Petrol	80	12/10->	ENGINE 1NZ-FE								
Engine: All engines	Information: Qty: 4									9.6359 C10		
1.5	Petrol	82	03/17->	ENGINE 2NR-FKE								
Engine: All engines	Information: Yaris, x 4, COIL ON PLUG									9.6437 C10		

A10	CONDENSER	A20	CONTACT SET	A40	DISTRIBUTOR CAP	A50	ROTOR	A70	PICK-UP
C10	COIL	C20	IGNITION MODULE	C30	ELECTRONIC IGNITION KIT	E01	IGNITION CABLE SET		

The present application list is a brief version. For the detailed information about the possibility of installation on a specific vehicle, please refer to our web-catalogue http://catalogo.facet.eu/

Vehicle	alim.	kW	Date	Engine	FUNCTIONS ON THE VEHICLE A10	A20	A40	A50	A70	C10 - C30	C20	E01
1.5 Hybrid	Petrol/ Electric	54	04/15->	1NZ-FXE						9.6359 C10		
1.5 Hybrid	Petrol/ Electric	55	03/12->	1NZ-FXE						9.6359 C10		
1.5 VVTi	Petrol	82	03/17->	2NR-FKE						9.6437 C10		
1.8 GRMN	Petrol	156	09/17->	2ZR-FE						9.6436 C10		

YARIS VERSO

Vehicle	alim.	kW	Date	Engine	FUNCTIONS ON THE VEHICLE A10	A20	A40	A50	A70	C10 - C30	C20	E01
1.3	Petrol	62	11/02-09/05	2NZ-FE						9.6359 C10		
1.3	Petrol	63	08/99-10/02	2NZ-FE						9.6359 C10		
1.3 VVTi	Petrol	62	04/03-09/05	2NZ-FE						9.6359 C10		
1.3 VVTi	Petrol	63	03/00-09/05	2NZ-FE						9.6359 C10		
1.5	Petrol	77	03/00-09/05	1NZ-FE						9.6359 C10		
1.5	Petrol	78	03/00-09/05	1NZ-FE						9.6359 C10		
1.5	Petrol	80	08/02-09/05	1NZ-FE						9.6359 C10		
1.5	Petrol	81	01/00-07/02	1NZ-FE						9.6359 C10		
1.5 VVTi	Petrol	78	03/00-03/03	1NZ-FE						9.6359 C10		

Engine	Information
All engines	Yaris, x 4, COIL ON PLUG
All engines	x 4, COIL ON PLUG
All engines	Qty: 4

A10	CONDENSER	A20	CONTACT SET	A40	DISTRIBUTOR CAP	A50	ROTOR	A70	PICK-UP
C10	COIL	C20	IGNITION MODULE	C30	ELECTRONIC IGNITION KIT	E01	IGNITION CABLE SET		

The present application list is a brief version. For the detailed information about the possibility of installation on a specific vehicle, please refer to our web-catalogue http://catalogo.facet.eu/

Vehicle	alim.	kW	Date	Engine	FUNCTIONS ON THE VEHICLE							
					A10	A20	A40	A50	A70	C10 - C30	C20	E01
1300												
1.3	Petrol	46	01/65-12/70	ENGINE: --								
Engine: All engines	Information:						2.8075	3.8106				
1.3 TC	Petrol	56	01/67-12/70	ENGINE: --, GE1EH								
Engine: All engines	Information:						2.8075	3.8106				
1500												
1.5	Petrol	42	10/70-12/74	ENGINE: --, 1EL								
Engine: All engines	Information:						2.8075	3.8106				
1.5	Petrol	49	01/72-12/74	ENGINE: --, 1EH								
Engine: All engines	Information:						2.8075	3.8106				
2.5 PI												
2.5	Petrol	90	10/68-10/75	ENGINE: --, 25PI								
Engine: All engines	Information:							3.8107				
2.5	Petrol	99	01/68-12/75	ENGINE: 25PI								
Engine: All engines	Information:							3.8107				
2000												
2.0	Petrol	65	03/72-04/75	ENGINE: 20TC								
Engine: All engines	Information:							3.8107				
2.0	Petrol	66	01/68-12/75	ENGINE: --, 20TC								
Engine: All engines	Information:							3.8107				
2.0 TC	Petrol	68	03/72-12/75	ENGINE: --								
Engine: All engines	Information:							3.8107				
GT6												
MK I	Petrol	70	01/66-12/68	ENGINE: KE1L								
Engine: All engines	Information:							3.7590				
MK II	Petrol	77	12/68-12/70	ENGINE: KE1L, KE2L								
Engine: All engines	Information:							3.7590				
MK III	Petrol	71	12/72-12/73	ENGINE: KE2L								
Engine: All engines	Information:							3.7590				
MK III	Petrol	77	12/71-12/72	ENGINE: KE2L								
Engine: All engines	Information:							3.7590				

A10	CONDENSER	A20	CONTACT SET	A40	DISTRIBUTOR CAP	A50	ROTOR	A70	PICK-UP
C10	COIL	C20	IGNITION MODULE	C30	ELECTRONIC IGNITION KIT	E01	IGNITION CABLE SET		

The present application list is a brief version. For the detailed information about the possibility of installation on a specific vehicle, please refer to our web-catalogue http://catalogo.facet.eu/

Vehicle	alim.	kW	Date	Engine	FUNCTIONS ON THE VEHICLE A10	A20	A40	A50	A70	C10 - C30	C20	E01
HERALD												
1200	Petrol	29	01/61-10/67	--, AJM								
All engines						1.4683MHDV	2.8075	3.8106				
1200	Petrol	35	01/68-12/69	AJM								
All engines							2.8075	3.8106				
1200	Petrol	46	01/67-12/68	--								
All engines							2.8075	3.8106				
13/60	Petrol	46	01/67-12/71	--								
All engines							2.8075	3.8106				
SPITFIRE												
1.2	Petrol	49	12/64-01/67	AJM								
All engines								3.7590				
1.2 MK I	Petrol	46	10/62-12/65	AJM								
All engines								3.7590				
1.3	Petrol	55	02/67-12/72	--, FM3								
All engines								3.7590				
1.5	Petrol	51	12/72-11/74	--								
All engines								3.7590				
TOLEDO												
1300	Petrol	43	10/70-12/77	--								
All engines							2.8075	3.8106				
1500	Petrol	46	10/70-12/77	--								
All engines							2.8075	3.8106				
1500	Petrol	49	01/72-12/77	--								
All engines							2.8075	3.8106				
1500 TC	Petrol	51	01/71-12/77	--								
All engines							2.8075	3.8106				
TR 2												
2.0	Petrol	66	01/53-12/55	--, HCL								
All engines								3.8106				
TR 3												
2.0	Petrol	67	12/55-12/57	--, HCL								
All engines								3.8106				

A10	CONDENSER	**A20**	CONTACT SET	**A40**	DISTRIBUTOR CAP	**A50**	ROTOR	**A70**	PICK-UP
C10	COIL	**C20**	IGNITION MODULE	**C30**	ELECTRONIC IGNITION KIT	**E01**	IGNITION CABLE SET		

The present application list is a brief version. For the detailed information about the possibility of installation on a specific vehicle, please refer to our web-catalogue http://catalogo.facet.eu/

Vehicle	alim.	kW	Date	Engine	FUNCTIONS ON THE VEHICLE							
					A10	A20	A40	A50	A70	C10 - C30	C20	E01
TR 3A												
				ENGINE								
2.0	Petrol	70	12/57-12/61	--								
Engine: All engines — Information:								3.8106				
				ENGINE								
2.2	Petrol	74	01/59-12/61	--, HE0H								
Engine: All engines — Information:								3.8106				
TR 4												
				ENGINE								
2.0	Petrol	75	01/61-12/65	--								
Engine: All engines — Information:								3.8106				
TR 4A												
				ENGINE								
2.2	Petrol	76	12/65-12/67	--, HE0H								
Engine: All engines — Information:								3.8106				
TR 5												
				ENGINE								
2.5 PI	Petrol	105	01/67-12/68	--								
Engine: All engines — Information:								3.8107				
TR 6												
				ENGINE								
2.5	Petrol	121	03/69-01/74	--, CR1H								
Engine: All engines — Information:								3.8107				
				ENGINE								
2.5	Petrol	90	01/72-12/76	CF1								
Engine: All engines — Information:						1.4683MHDV		3.8107				
				ENGINE								
2.5 PI	Petrol	105	01/69-12/76	--								
Engine: All engines — Information:								3.8107				
VITESSE												
				ENGINE								
1.6	Petrol	51	01/62-12/67	--								
Engine: All engines — Information:								3.7590, 3.8107				
				ENGINE								
2.0	Petrol	70	12/65-12/71	--, HB1LE								
Engine: All engines — Information:								3.7590, 3.8107				
				ENGINE								
2.0	Petrol	77	12/68-12/71	--, HB1HE								
Engine: All engines — Information:								3.7590, 3.8107				

A10	CONDENSER	A20	CONTACT SET	A40	DISTRIBUTOR CAP	A50	ROTOR	A70	PICK-UP
C10	COIL	C20	IGNITION MODULE	C30	ELECTRONIC IGNITION KIT	E01	IGNITION CABLE SET		

The present application list is a brief version. For the detailed information about the possibility of installation on a specific vehicle, please refer to our web-catalogue http://catalogo.facet.eu/

Vehicle	alim.	kW	Date	Engine	FUNCTIONS ON THE VEHICLE							
					A10	A20	A40	A50	A70	C10 - C30	C20	E01
2500												
				ENGINE								
2.5	Petrol	78	01/72-12/77	--, CF1								
Engine	Information				A10	A20	A40	A50	A70	C10 - C30	C20	E01
All engines								3.8107				
VIXEN												
				ENGINE								
1800	Petrol	70	01/68-12/68	--								
Engine	Information				A10	A20	A40	A50	A70	C10 - C30	C20	E01
All engines								3.8106				

A10	CONDENSER	**A20**	CONTACT SET	**A40**	DISTRIBUTOR CAP	**A50**	ROTOR	**A70**	PICK-UP
C10	COIL	**C20**	IGNITION MODULE	**C30**	ELECTRONIC IGNITION KIT	**E01**	IGNITION CABLE SET		

The present application list is a brief version. For the detailed information about the possibility of installation on a specific vehicle, please refer to our web-catalogue http://catalogo.facet.eu/

Vehicle	alim.	kW	Date	Engine	FUNCTIONS ON THE VEHICLE							
					A10	A20	A40	A50	A70	C10 - C30	C20	E01
ADAM												
1.0	Petrol	66	07/14->	B 10 XFL						9.6531 C10		
Engine: All engines — Information: Qty: 3												
1.0	Petrol	85	07/14-11/18	B 10 XFT, D 10 XFT						9.6531 C10		
Engine: All engines — Information: x 3, COIL ON PLUG												
1.2	Petrol	51	10/12-04/19	A 12 XEL, B 12 XEL, D 12 XEL						9.6447 C10		
Engine: All engines — Information: x 1, COIL ON RAIL												
1.4	Petrol	64	10/12-02/19	A 14 XEL, B 14 XEL, D 14 XEL						9.6447 C10		
Engine: All engines — Information: x 1, COIL ON RAIL												
1.4	Petrol	74	10/12-02/19	A 14 XER, B 14 XER						9.6447 C10		
Engine: All engines — Information: x 1, COIL ON RAIL												
1.4 LPG	Petrol/ Liquified Petro-leum Gas (LPG)	64	07/13->	A 14 XEL						9.6447 C10		
Engine: All engines — Information:												
1.4 S	Petrol	110	11/14-01/19	B 14 NEH						9.6447 C10		
Engine: All engines — Information: x 1, COIL ON RAIL												
AGILA A												
1.0 12V	Petrol	43	09/00-08/05	Z 10 XE						9.6298 C10		
Engine: All engines — Information: x 3, BOSCH, COIL ON PLUG												
1.0 12V	Petrol	44	02/00-11/06	Z 10 XEP						9.6298 C10		
Engine: All engines — Information: x 3, BOSCH, COIL ON PLUG, 12 Volt, Dia: 55 mm, for pre-resistance												
1.2 16V	Petrol	55	09/00-03/08	Z 12 XE						9.6300 C10		
Engine: All engines — Information: x 4, BOSCH, COIL ON PLUG												
1.2 16V Twinport	Petrol	59	07/04-11/06	Z 12 XEP						9.6300 C10		
Engine: All engines — Information: x 1, BOSCH, COIL ON PLUG, incl. spark plug connector												
AMPERA												
EV 150	Petrol/ Electric	111	03/12->	4ET50, A 14 XFL								
Engine: Eng. 4ET50 — Information:										9.6447 C10		
Engine: Eng. A 14 XFL — Information: x 1, COIL ON RAIL										9.6447 C10		

A10	CONDENSER	A20	CONTACT SET	A40	DISTRIBUTOR CAP	A50	ROTOR	A70	PICK-UP
C10	COIL	C20	IGNITION MODULE	C30	ELECTRONIC IGNITION KIT	E01	IGNITION CABLE SET		

The present application list is a brief version. For the detailed information about the possibility of installation on a specific vehicle, please refer to our web-catalogue http://catalogo.facet.eu/

Vehicle	alim.	kW	Date	Engine	FUNCTIONS ON THE VEHICLE A10	A20	A40	A50	A70	C10 - C30	C20	E01

ASTRA III

				ENGINE
1.4	Petrol	55	09/91-09/93	14 NV

Engine	Information	A10	A20	A40	A50	A70	C10 - C30	C20	E01
All engines	version Bosch			2.7530/26PHT	3.7556RS				
All engines								9.4005	
All engines	->eng. 02BF1476, 19241623								4.9237
All engines	eng. type 02BF1477, 19241624 ->								4.9529

				ENGINE
1.4 i	Petrol	44	09/91-09/98	C 14 NZ

Engine	Information	A10	A20	A40	A50	A70	C10 - C30	C20	E01
All engines	connector type SAE, version Bosch			2.7530/19PHT					
All engines	connector type M4, version Bosch			2.7530/26PHT					
All engines	version Bosch				3.7573/21RS				
All engines	version Lucas				3.8128RS	8.4702			
All engines							9.6040 C10	9.4036	
All engines	->eng. 02BF1476, 19241623								4.9237
All engines	eng. type 02BF1477, 19241624 ->								4.9529

				ENGINE
1.4 i	Petrol	60	03/91-03/01	C 14 SE

Engine	Information	A10	A20	A40	A50	A70	C10 - C30	C20	E01
All engines	version Lucas			2.8100PHT	3.8128RS				
All engines							9.6040 C10	9.4036	
All engines	eng. type 02T14053, 02BD1413 ->								4.8634
All engines	->eng. 02T14052, 19880550								4.9237
All engines	eng. type 02BD1413, 19280317 ->								4.9531

				ENGINE
1.4 i 16V	Petrol	66	01/96-03/01	X 14 XE

Engine	Information	A10	A20	A40	A50	A70	C10 - C30	C20	E01
All engines									4.9559

				ENGINE
1.4 S	Petrol	55	09/91-02/98	14 NV

Engine	Information	A10	A20	A40	A50	A70	C10 - C30	C20	E01
All engines	version Bosch			2.7530/26PHT	3.7556RS				
All engines								9.4005	
All engines	->eng. 02BF1476, 19241623								4.9237
All engines	eng. type 02BF1477, 19241624 ->								4.9529

				ENGINE
1.6	Petrol	74	03/94-08/95	C 16 SE

Engine	Information	A10	A20	A40	A50	A70	C10 - C30	C20	E01
All engines	->eng. 02BD0920								4.8634
All engines	eng. type 02BD0921 ->								4.9531

				ENGINE
1.6 i	Petrol	52	02/93-02/98	X 16 SZ

Engine	Information	A10	A20	A40	A50	A70	C10 - C30	C20	E01
All engines	->eng. 02BE6166								4.8634
All engines	eng. type 02BE6167 ->								4.9531

				ENGINE
1.6 i	Petrol	55	09/91-03/01	C 16 NZ, X 16 SZR

Engine	Information	A10	A20	A40	A50	A70	C10 - C30	C20	E01
Eng. C 16 NZ	version Delco Remy			2.7573PHT	3.7600	8.3410			
Eng. C 16 NZ							9.6241 C10	9.4025	
Eng. C 16 NZ	->eng. 02V65825								4.8514
Eng. X 16 SZR	->eng. 02BE6166								4.8634
Eng. X 16 SZR	eng. type 02BE6167 ->								4.9531

				ENGINE
1.6 i	Petrol	74	03/92-02/98	C 16 SE

Engine	Information	A10	A20	A40	A50	A70	C10 - C30	C20	E01
All engines	->eng. 02BD0920								4.8634
All engines	eng. type 02BD0921 ->								4.9531

A10	CONDENSER	A20	CONTACT SET	A40	DISTRIBUTOR CAP	A50	ROTOR	A70	PICK-UP
C10	COIL	C20	IGNITION MODULE	C30	ELECTRONIC IGNITION KIT	E01	IGNITION CABLE SET		

The present application list is a brief version. For the detailed information about the possibility of installation on a specific vehicle, please refer to our web-catalogue http://catalogo.facet.eu/

Vehicle	alim.	kW	Date	Engine	FUNCTIONS ON THE VEHICLE A10	A20	A40	A50	A70	C10 - C30	C20	E01
1.6 i 16V	Petrol	74	01/94-09/98	ENGINE X 16 XEL								
All engines				-->eng. 20C17332								4.8688
All engines				eng. type 20C17333 -->								4.9559
1.6 Si	Petrol	74	03/91-12/94	ENGINE C 16 SE								
All engines				-->eng. 02BD0920								4.8634
All engines				eng. type 02BD0921 -->								4.9531
1.8	Petrol	92	09/94-08/96	ENGINE C 18 XE								
All engines										9.6172 C10		
All engines				ch. W2000000 ->, ch. W5000000 ->, ch. W8000000 ->								4.9506
All engines				->ch. V2999999, ->ch. V5999999, ->ch. V8999999								4.9562
1.8 16V	Petrol	85	11/94-03/01	ENGINE C 18 XEL, X 18 XE								
All engines										9.6172 C10		
All engines				ch. W2000000 ->, ch. W5000000 ->, ch. W8000000 ->								4.9506
All engines				->ch. V2999999, ->ch. V5999999, ->ch. V8999999								4.9562
1.8 i	Petrol	66	09/91-09/98	ENGINE C 18 NZ								
All engines				version Bosch			2.7530/27PHT	3.7573/27RS				
All engines				version Ducellier			2.7684PHT	3.7703RS				
All engines										9.6040 C10	9.4036	
All engines				FOR: (ZA)						9.6092 C10		
All engines				eng. type 14349312 -->								4.8689
1.8 i 16V	Petrol	82	09/95-02/98	ENGINE 18 SE								
All engines										9.6092 C10		
1.8 i 16V	Petrol	85	01/94-02/98	ENGINE C 18 XEL, X 18 XE								
All engines										9.6172 C10		
All engines				ch. W2000000 ->, ch. W5000000 ->, ch. W8000000 ->								4.9506
All engines				->ch. V2999999, ->ch. V5999999, ->ch. V8999999								4.9562
1.8 i 16V	Petrol	92	06/93-02/98	ENGINE C 18 XE								
All engines										9.6172 C10		
All engines				ch. W2000000 ->, ch. W5000000 ->, ch. W8000000 ->								4.9506
All engines				->ch. V2999999, ->ch. V5999999, ->ch. V8999999								4.9562
2.0 i	Petrol	85	09/91-09/98	ENGINE C 20 NE								
All engines				version Bosch			2.7530/27PHT	3.7573/27RS				
All engines				version Ducellier			2.7684PHT	3.7703RS				
All engines										9.6092 C10		
All engines				eng. type 14672354 ->, ->ch. R2999999, ->ch. R3999999, ->ch. R4999999, ->ch. R5999999, ->ch. R6999999, ->ch. R8999999								4.8689
2.0 i 16V	Petrol	100	01/94-09/98	ENGINE X 20 XEV								
All engines										9.6172 C10		
All engines				ch. W2000000 ->, ch. W5000000 ->, ch. W8000000 ->								4.9506
All engines				->ch. V2999999, ->ch. V5999999, ->ch. V8999999								4.9562

A10	CONDENSER	A20	CONTACT SET	A40	DISTRIBUTOR CAP	A50	ROTOR	A70	PICK-UP
C10	COIL	C20	IGNITION MODULE	C30	ELECTRONIC IGNITION KIT	E01	IGNITION CABLE SET		

The present application list is a brief version. For the detailed information about the possibility of installation on a specific vehicle, please refer to our web-catalogue http://catalogo.facet.eu/

Vehicle	alim.	kW	Date	Engine	FUNCTIONS ON THE VEHICLE A10	A20	A40	A50	A70	C10 - C30	C20	E01
2.0 i 16V	Petrol	110	09/91-02/98	**C 20 XE**								

Engine	Information	A10	A20	A40	A50	A70	C10 - C30	C20	E01
All engines	->eng. 14137012, version Bosch			2.7530/27PHT	3.7573/21RS				
All engines	eng. type 14137013 ->						9.6173 C10		
All engines	eng. type 14002935 ->								4.8688

ASTRA IV

1.2 16V	Petrol	48	02/98-09/00	**X 12 XE**

Engine	Information	A10	A20	A40	A50	A70	C10 - C30	C20	E01
All engines							9.6300 C10		

1.2 16V	Petrol	55	09/00-05/05	**Z 12 XE**

Engine	Information	A10	A20	A40	A50	A70	C10 - C30	C20	E01
All engines							9.6300 C10		

1.4 16V	Petrol	66	02/98-05/05	**X 14 XE, Z 14 XE**

Engine	Information	A10	A20	A40	A50	A70	C10 - C30	C20	E01
All engines	x 1, COIL ON PLUG, incl. spark plug connector						9.6299 C10		

1.4 16V Dualfuel	Petrol/ Liquified Petro-leum Gas (LPG)	66	09/99-06/03	**X 14 XE, Z 14 XE**

Engine	Information	A10	A20	A40	A50	A70	C10 - C30	C20	E01
All engines	x 1, COIL ON PLUG, incl. spark plug connector						9.6299 C10		

1.6	Petrol	55	02/98-04/04	**X 16 SZR**

Engine	Information	A10	A20	A40	A50	A70	C10 - C30	C20	E01
All engines									4.9904

1.6	Petrol	62	03/98-05/05	**Z 16 SE**

Engine	Information	A10	A20	A40	A50	A70	C10 - C30	C20	E01
All engines									4.9904

1.6	Petrol	76	12/02-05/05	**Z 16 XEP**

Engine	Information	A10	A20	A40	A50	A70	C10 - C30	C20	E01
All engines	x 1, DELPHI, COIL ON PLUG, incl. spark plug connector						9.6350 C10		

1.6 16V	Petrol	74	02/98-10/05	**X 16 XEL, Z 16 XE, Z 16 XEP**

Engine	Information	A10	A20	A40	A50	A70	C10 - C30	C20	E01
Eng. X 16 XEL, Z 16 XE	x 1, COIL ON PLUG, incl. spark plug connector						9.6299 C10		
Eng. Z 16 XEP							9.6350 C10		

1.6 16V	Petrol	76	03/00-10/05	**Z 16 XEP**

Engine	Information	A10	A20	A40	A50	A70	C10 - C30	C20	E01
All engines	x 1, DELPHI, COIL ON PLUG, incl. spark plug connector						9.6350 C10		

1.6 Dualfuel	Petrol/ Liquified Petro-leum Gas (LPG)	63	03/98-05/05	**Z 16 XE**

Engine	Information	A10	A20	A40	A50	A70	C10 - C30	C20	E01
All engines							9.6299 C10		

1.6 Dualfuel	Petrol/ Liquified Petro-leum Gas (LPG)	74	09/99-08/04	**X 16 XEL, Z 16 XE**

Engine	Information	A10	A20	A40	A50	A70	C10 - C30	C20	E01
All engines	x 1, COIL ON PLUG, incl. spark plug connector						9.6299 C10		

A10	CONDENSER	**A20**	CONTACT SET	**A40**	DISTRIBUTOR CAP	**A50**	ROTOR	**A70**	PICK-UP
C10	COIL	**C20**	IGNITION MODULE	**C30**	ELECTRONIC IGNITION KIT	**E01**	IGNITION CABLE SET		

The present application list is a brief version. For the detailed information about the possibility of installation on a specific vehicle, please refer to our web-catalogue http://catalogo.facet.eu/

Vehicle	alim.	kW	Date	Engine	FUNCTIONS ON THE VEHICLE A10	A20	A40	A50	A70	C10 - C30	C20	E01
1.8 16V	Petrol	85	02/98-08/05	ENGINE X 18 XE1								
All engines	x 1, COIL ON PLUG, incl. spark plug connector									9.6408 C10		
1.8 16V	Petrol	92	02/98-10/05	ENGINE Z 18 XE								
All engines	x 1, COIL ON PLUG, incl. spark plug connector									9.6408 C10		
1.8 16V Dualfuel	Petrol/ Liquified Petro-leum Gas (LPG)	87	02/98-08/05	ENGINE Z 18 XE								
All engines	x 1, COIL ON PLUG, incl. spark plug connector									9.6408 C10		
1.8 16V Dualfuel	Petrol/ Liquified Petro-leum Gas (LPG)	92	07/02-08/04	ENGINE Z 18 XE								
All engines	x 1, COIL ON PLUG, incl. spark plug connector									9.6408 C10		
2.0	Petrol	118	10/99-08/00	ENGINE X 20 XER								
All engines										9.6172 C10		4.9562
2.0	Petrol	147	08/02-10/05	ENGINE Z 20 LET								
All engines										9.6407 C10		
All engines	x 1, COIL ON PLUG									9.6407 C10		
2.0 16V	Petrol	100	02/98-05/05	ENGINE X 20 XEV								
All engines										9.6172 C10		4.9562
All engines	x 1, D.I.S.									9.6172 C10		
2.0 16V Turbo	Petrol	140	09/00-08/05	ENGINE Z 20 LET								
All engines	x 1, COIL ON PLUG									9.6407 C10		
2.0 SRI Turbo	Petrol	141	11/01-05/05	ENGINE Z 20 LET								
All engines	x 1, COIL ON PLUG									9.6407 C10		
2.0 Turbo	Petrol	141	03/02-10/05	ENGINE Z 20 LET								
All engines										9.6407 C10		
All engines	x 1, COIL ON PLUG									9.6407 C10		
2.0 Turbo	Petrol	147	08/03-05/05	ENGINE Z 20 LET								
All engines										9.6407 C10		
ASTRA V												
1.2	Petrol	59	08/05-10/10	ENGINE Z 12 XEP								
All engines										9.6300 C10		
1.4	Petrol	55	08/04-10/10	ENGINE Z 14 XEL								
All engines										9.6300 C10		

A10	CONDENSER	A20	CONTACT SET	A40	DISTRIBUTOR CAP	A50	ROTOR	A70	PICK-UP
C10	COIL	C20	IGNITION MODULE	C30	ELECTRONIC IGNITION KIT	E01	IGNITION CABLE SET		

The present application list is a brief version. For the detailed information about the possibility of installation on a specific vehicle, please refer to our web-catalogue http://catalogo.facet.eu/

Vehicle	alim.	kW	Date	Engine	FUNCTIONS ON THE VEHICLE A10	A20	A40	A50	A70	C10 - C30	C20	E01
1.4	Petrol	66	01/04-05/09	Z 14 XEP								
Engine: All engines — Information: x 1, BOSCH, COIL ON PLUG, incl. spark plug connector										9.6300 C10		
1.4 i 16V	Petrol	66	03/05-11/10	Z 14 XEP								
Engine: All engines — Information: x 1, BOSCH, COIL ON PLUG, incl. spark plug connector										9.6300 C10		
1.6	Petrol	132	08/04-11/10	A 16 LET, Z 16 LET								
Engine: All engines — Information: x 1, DELPHI, COIL ON PLUG, incl. spark plug connector										9.6350 C10		
1.6	Petrol	77	01/04-11/10	Z 16 XE1, Z 16 XEP								
Engine: All engines — Information: x 1, DELPHI, COIL ON PLUG, incl. spark plug connector										9.6350 C10		
1.6	Petrol	85	01/04-03/11	A 16 XER, Z 16 XER								
Engine: All engines — Information: x 1, DELPHI, COIL ON PLUG, incl. spark plug connector										9.6350 C10		
Engine: Eng. Z 16 XER										9.6350 C10		
Engine: Eng. A 16 XER										9.6445 C10		
1.6 i 16V	Petrol	85	10/06-08/11	A 16 XER, Z 16 XER								
Engine: All engines — Information: x 1, DELPHI, COIL ON PLUG, incl. spark plug connector										9.6350 C10		
Engine: Eng. Z 16 XER										9.6350 C10		
1.6 Turbo	Petrol	132	09/06-09/09	A 16 LET, Z 16 LET								
Engine: All engines — Information: x 1, DELPHI, COIL ON PLUG, incl. spark plug connector										9.6350 C10		
1.8	Petrol	103	01/04-11/10	A 18 XER, Z 18 XER								
Engine: All engines — Information: x 1, DELPHI, COIL ON PLUG, incl. spark plug connector										9.6350 C10		
Engine: Eng. A 18 XER										9.6445 C10		
1.8	Petrol	92	01/04-11/10	Z 18 XE								
Engine: All engines — Information:										9.6408 C10		
Engine: All engines — Information: x 1, COIL ON PLUG, incl. spark plug connector										9.6408 C10		
1.8 i 16V	Petrol	103	03/07-11/10	A 18 XER, Z 18 XER								
Engine: All engines — Information: x 1, DELPHI, COIL ON PLUG, incl. spark plug connector										9.6350 C10		
2.0	Petrol	125	02/06-11/10	Z 20 LEL								
Engine: All engines — Information: x 1, COIL ON PLUG										9.6407 C10		
2.0 Turbo	Petrol	125	01/04-11/10	Z 20 LEL								
Engine: All engines — Information: x 1, COIL ON PLUG										9.6407 C10		
2.0 Turbo	Petrol	147	01/04-11/10	Z 20 LER								
Engine: All engines — Information: x 1, COIL ON PLUG										9.6407 C10		
2.0 Turbo	Petrol	177	01/04-05/09	Z 20 LEH								
Engine: All engines — Information: x 1, COIL ON PLUG										9.6407 C10		

A10	CONDENSER	A20	CONTACT SET	A40	DISTRIBUTOR CAP	A50	ROTOR	A70	PICK-UP
C10	COIL	C20	IGNITION MODULE	C30	ELECTRONIC IGNITION KIT	E01	IGNITION CABLE SET		

The present application list is a brief version. For the detailed information about the possibility of installation on a specific vehicle, please refer to our web-catalogue http://catalogo.facet.eu/

Vehicle	alim.	kW	Date	Engine	FUNCTIONS ON THE VEHICLE							
					A10	A20	A40	A50	A70	C10 - C30	C20	E01
2.0 VXR	Petrol	176	02/09-11/10	**Z 20 LEH**								
All engines				x 1, COIL ON PLUG						9.6407 C10		
ASTRA VI												
1.4	Petrol	103	10/11-10/15	**A 14 NET, B 14 NET**								
All engines				x 1, COIL ON RAIL						9.6447 C10		
1.4	Petrol	64	12/09-10/15	**A 14 XEL**								
All engines				x 1, COIL ON RAIL						9.6447 C10		
1.4	Petrol	74	12/09-10/15	**A 14 XER, B 14 XER**								
All engines				x 1, COIL ON RAIL						9.6447 C10		
1.4	Petrol	88	10/11-10/15	**A 14 NEL, B 14 NEL**								
All engines				x 1, COIL ON RAIL						9.6447 C10		
1.4 Turbo	Petrol	103	12/09-10/15	**A 14 NET, B 14 NET**								
All engines				x 1, COIL ON RAIL						9.6447 C10		
1.4 Turbo	Petrol	88	08/10->	**A 14 NEL**								
All engines										9.6447 C10		
All engines				x 1, COIL ON RAIL						9.6447 C10		
1.6	Petrol	132	10/11-10/15	**A 16 LET**								
All engines				x 1, COIL ON PLUG						9.6445 C10		
1.6	Petrol	85	12/09-10/15	**A 16 XER, B 16 XER**								
All engines				x 1, COIL RAILS						9.6445 C10		
1.6 Turbo	Petrol	132	12/09-10/15	**A 16 LET**								
All engines				x 1, COIL ON PLUG						9.6445 C10		
ASTRA VII												
1.0	Petrol	77	07/15->	**B 10 XFL, D 10 XFL**								
All engines				x 3, COIL ON PLUG						9.6531 C10		
1.4 Turbo	Petrol	110	07/15->	**B 14 XFT**								
All engines				x 4, COIL ON PLUG						9.6531 C10		
1.4 Turbo	Petrol	92	07/15->	**B 14 XFL**								
All engines				x 4, COIL ON PLUG						9.6531 C10		
ASTRAVAN I												
1.4 i	Petrol	44	09/91-08/95	**C 14 NZ**								
All engines				connector type SAE, version Bosch			2.7530/19PHT					
All engines				connector type M4, version Bosch			2.7530/26PHT					

A10	CONDENSER	**A20**	CONTACT SET	**A40**	DISTRIBUTOR CAP	**A50**	ROTOR	**A70**	PICK-UP
C10	COIL	**C20**	IGNITION MODULE	**C30**	ELECTRONIC IGNITION KIT	**E01**	IGNITION CABLE SET		

The present application list is a brief version. For the detailed information about the possibility of installation on a specific vehicle, please refer to our web-catalogue http://catalogo.facet.eu/

Vehicle	alim.	kW	Date	Engine	FUNCTIONS ON THE VEHICLE: A10	A20	A40	A50	A70	C10 - C30	C20	E01

ASTRAVAN I

				ENGINE
1.4 i	Petrol	44	09/91-08/95	C 14 NZ

Engine	Information	A10	A20	A40	A50	A70	C10 - C30	C20	E01
All engines	version Bosch				3.7573/21RS				
All engines	version Lucas				3.8128RS	8.4702			
All engines							9.6040 C10	9.4036	
All engines	->eng. 02BF1476, 19241623								4.9237
All engines	eng. type 02BF1477, 19241624 ->								4.9529

				ENGINE
1.6 i	Petrol	52	09/94-08/96	X 16 SZ

Engine	Information	A10	A20	A40	A50	A70	C10 - C30	C20	E01
All engines	->eng. 02BE6166								4.8634
All engines	eng. type 02BE6167 ->								4.9531

				ENGINE
1.6 i	Petrol	55	10/91-08/98	C 16 NZ

Engine	Information	A10	A20	A40	A50	A70	C10 - C30	C20	E01
All engines	version Delco Remy			2.7573PHT	3.7600	8.3410			
All engines							9.6241 C10	9.4025	
All engines	->eng. 02V65825								4.8514

ASTRAVAN II

				ENGINE
1.4 16V	Petrol	66	09/00-05/05	Z 14 XE

Engine	Information	A10	A20	A40	A50	A70	C10 - C30	C20	E01
All engines	x 1, COIL ON PLUG, incl. spark plug connector						9.6299 C10		

				ENGINE
1.6 Dualfuel	Petrol/ Liquified Petro-leum Gas (LPG)	74	07/00-08/05	Z 16 XE, Z 16 XEP

Engine	Information	A10	A20	A40	A50	A70	C10 - C30	C20	E01
Eng. Z 16 XE	x 1, COIL ON PLUG, incl. spark plug connector						9.6299 C10		
All engines	x 1, DELPHI, COIL ON PLUG, incl. spark plug connector						9.6350 C10		

				ENGINE
1.6 Dualfuel 16V	Petrol/ Liquified Petro-leum Gas (LPG)	77	10/04-12/05	Z 16 XEP

Engine	Information	A10	A20	A40	A50	A70	C10 - C30	C20	E01
All engines	x 1, DELPHI, COIL ON PLUG, incl. spark plug connector						9.6350 C10		

				ENGINE
1.6 i	Petrol	55	08/98-09/00	X 16 SZR

Engine	Information	A10	A20	A40	A50	A70	C10 - C30	C20	E01
All engines									4.9904

				ENGINE
1.6 i	Petrol	62	09/00-08/06	Z 16 SE

Engine	Information	A10	A20	A40	A50	A70	C10 - C30	C20	E01
All engines									4.9904

ASTRAVAN III

				ENGINE
1.4 i	Petrol	66	03/05->	Z 14 XEP

Engine	Information	A10	A20	A40	A50	A70	C10 - C30	C20	E01
All engines	x 1, BOSCH, COIL ON PLUG, incl. spark plug connector						9.6300 C10		

				ENGINE
1.6	Petrol	76	03/05->	Z 16 XE1, Z 16 XEP

Engine	Information	A10	A20	A40	A50	A70	C10 - C30	C20	E01
All engines	x 1, DELPHI, COIL ON PLUG, incl. spark plug connector						9.6350 C10		

CALIBRA

				ENGINE
2.0 i	Petrol	85	06/90-07/97	C 20 NE

Engine	Information	A10	A20	A40	A50	A70	C10 - C30	C20	E01
All engines	version Bosch			2.7530/27PHT	3.7573/27RS				
All engines	version Ducellier			2.7684PHT	3.7703RS				

A10	CONDENSER	A20	CONTACT SET	A40	DISTRIBUTOR CAP	A50	ROTOR	A70	PICK-UP
C10	COIL	C20	IGNITION MODULE	C30	ELECTRONIC IGNITION KIT	E01	IGNITION CABLE SET		

The present application list is a brief version. For the detailed information about the possibility of installation on a specific vehicle, please refer to our web-catalogue http://catalogo.facet.eu/

Vehicle	alim.	kW	Date	Engine	FUNCTIONS ON THE VEHICLE							
					A10	A20	A40	A50	A70	C10 - C30	C20	E01

CALIBRA

				ENGINE
2.0 i	Petrol	85	06/90-07/97	C 20 NE

Engine	Information	A10	A20	A40	A50	A70	C10 - C30		C20	E01
All engines	->eng. 14180385, info WY						9.6091	C10		
All engines	eng. type 14180386 ->, info WE						9.6092	C10		
All engines	eng. type 14672353 ->, ->ch. R1..., R9..., no specific info conc. application available									4.8689

				ENGINE
2.0 i 16V	Petrol	100	06/90-07/97	X 20 XEV

Engine	Information	A10	A20	A40	A50	A70	C10 - C30		C20	E01
All engines							9.6172	C10		
All engines	ch. 14195307 ->									4.9506
All engines	->ch. 14195306									4.9562

				ENGINE
2.0 i 16V	Petrol	110	06/90-02/94	C 20 XE

Engine	Information	A10	A20	A40	A50	A70	C10 - C30		C20	E01
All engines	version Bosch			2.7530/21PHT	3.7573/21RS					
All engines	ch. P1000001, P9000001 ->						9.6173	C10		4.8688

				ENGINE
2.0 i 16V 4x4	Petrol	100	02/94-07/97	X 20 XEV

Engine	Information	A10	A20	A40	A50	A70	C10 - C30		C20	E01
All engines							9.6172	C10		
All engines	ch. 14195307 ->									4.9506
All engines	->ch. 14195306									4.9562

				ENGINE
2.0 i 16V 4x4	Petrol	110	06/90-02/94	C 20 XE

Engine	Information	A10	A20	A40	A50	A70	C10 - C30		C20	E01
All engines	version Bosch			2.7530/21PHT	3.7573/21RS					
All engines	ch. P1000001, P9000001 ->						9.6173	C10		4.8688

				ENGINE
2.0 i 4x4	Petrol	85	06/90-07/97	C 20 NE

Engine	Information	A10	A20	A40	A50	A70	C10 - C30		C20	E01
All engines	version Bosch			2.7530/27PHT	3.7573/27RS					
All engines	version Ducellier			2.7684PHT	3.7703RS					
All engines	->eng. 14180385, info WY						9.6091	C10		
All engines	eng. type 14180386 ->, info WE						9.6092	C10		
All engines	eng. type 14672353 ->, ->ch. R1..., R9..., no specific info conc. application available									4.8689

				ENGINE
2.0 i Turbo 4x4	Petrol	150	03/92-07/97	C 20 LET

Engine	Information	A10	A20	A40	A50	A70	C10 - C30		C20	E01
All engines	version Bosch			2.7530/27PHT	3.7573/21RS					

CASCADA

				ENGINE
1.4	Petrol	103	02/13->	A 14 NET, B 14 NET

Engine	Information	A10	A20	A40	A50	A70	C10 - C30		C20	E01
All engines	x 1, COIL ON RAIL						9.6447	C10		

				ENGINE
1.4	Petrol	88	02/13->	A 14 NEL

Engine	Information	A10	A20	A40	A50	A70	C10 - C30		C20	E01
All engines							9.6447	C10		

CAVALIER

				ENGINE
1.3	Petrol	43	08/77-01/81	--, LW4

Engine	Information	A10	A20	A40	A50	A70	C10 - C30		C20	E01
All engines					3.7590					

				ENGINE
1300	Petrol	44	08/77-08/81	13 N

Engine	Information	A10	A20	A40	A50	A70	C10 - C30		C20	E01
All engines					3.7590					

A10	CONDENSER	A20	CONTACT SET	A40	DISTRIBUTOR CAP	A50	ROTOR	A70	PICK-UP
C10	COIL	C20	IGNITION MODULE	C30	ELECTRONIC IGNITION KIT	E01	IGNITION CABLE SET		

The present application list is a brief version. For the detailed information about the possibility of installation on a specific vehicle, please refer to our web-catalogue http://catalogo.facet.eu/

Vehicle	alim.	kW	Date	Engine	FUNCTIONS ON THE VEHICLE A10	A20	A40	A50	A70	C10 - C30	C20	E01

CAVALIER CC

				ENGINE
1.3	Petrol	42	08/75-08/81	--, LW4

Engine	Information	A10	A20	A40	A50	A70	C10 - C30	C20	E01
All engines					3.7590				

CHEVETTE

				ENGINE
1.2	Petrol	39	09/76-12/85	13 N

Engine	Information	A10	A20	A40	A50	A70	C10 - C30	C20	E01
All engines					3.7590				

				ENGINE
1300	Petrol	39	03/75-12/85	13 N

Engine	Information	A10	A20	A40	A50	A70	C10 - C30	C20	E01
All engines					3.7590				

				ENGINE
1300	Petrol	42	09/74-12/85	13 S

Engine	Information	A10	A20	A40	A50	A70	C10 - C30	C20	E01
All engines					3.7590				

COMBO B

				ENGINE
1.2	Petrol	33	07/94-10/01	C 12 NZ, X 12 SZ

Engine	Information	A10	A20	A40	A50	A70	C10 - C30	C20	E01
Eng. C 12 NZ	version Bosch			2.7530/26PHT	3.7573/21RS				
Eng. C 12 NZ	version Lucas			2.8100PHT	3.8128RS				
Eng. C 12 NZ							9.6040 C10	9.4036	
All engines	ch. 19019894 ->, ->ch. 19334654								4.7195
All engines	ch. 19334657 ->								4.7199
All engines	->ch. 19019893								4.9237

				ENGINE
1.4	Petrol	44	07/94-10/01	C 14 NZ

Engine	Information	A10	A20	A40	A50	A70	C10 - C30	C20	E01
All engines	version Bosch			2.7530/26PHT	3.7573/21RS				
All engines	version Lucas			2.8100PHT	3.8128RS				
All engines							9.6040 C10	9.4036	
All engines	->ch. 02BF1475, 19241622								4.7195
All engines	ch. 02BF1476, 19241623 ->, -air conditioning								4.7199
All engines	ch. 02BF1476, 19241623 ->, +air conditioning								4.9529

				ENGINE
1.4	Petrol	60	07/94-10/01	C 14 SE

Engine	Information	A10	A20	A40	A50	A70	C10 - C30	C20	E01
All engines	->ch. 02BD1412, 19262000								4.8634
All engines	ch. 02HY3580 ->								4.9904

				ENGINE
1.4 16V	Petrol	66	08/99-10/01	X 14 XE

Engine	Information	A10	A20	A40	A50	A70	C10 - C30	C20	E01
All engines	->ch. 20C17331								4.8688
All engines	ch. 20C17332 ->								4.9559

COMBO C

				ENGINE
1.4	Petrol	66	10/04-09/10	Z 14 XEP

Engine	Information	A10	A20	A40	A50	A70	C10 - C30	C20	E01
All engines	x 1, BOSCH, COIL ON PLUG, incl. spark plug connector						9.6300 C10		

				ENGINE
1.4 16V	Petrol	66	10/01-05/07	Z 14 XE

Engine	Information	A10	A20	A40	A50	A70	C10 - C30	C20	E01
All engines							9.6299 C10		

				ENGINE
1.4 i 16V	Petrol	66	01/04-11/11	Z 14 XEP

Engine	Information	A10	A20	A40	A50	A70	C10 - C30	C20	E01
All engines	x 1, BOSCH, COIL ON PLUG, incl. spark plug connector						9.6300 C10		

A10	CONDENSER	A20	CONTACT SET	A40	DISTRIBUTOR CAP	A50	ROTOR	A70	PICK-UP
C10	COIL	C20	IGNITION MODULE	C30	ELECTRONIC IGNITION KIT	E01	IGNITION CABLE SET		

The present application list is a brief version. For the detailed information about the possibility of installation on a specific vehicle, please refer to our web-catalogue http://catalogo.facet.eu/

Vehicle	alim.	kW	Date	Engine	FUNCTIONS ON THE VEHICLE A10	A20	A40	A50	A70	C10 - C30	C20	E01
1.6	Petrol	62	09/01-10/04	ENGINE Z 16 SE								
Engine: All engines	Information:											4.9904
1.6	Petrol	64	10/01-11/11	ENGINE Z 16 SE								
Engine: All engines	Information:											4.9904
1.6 CNG	Petrol/ Compressed Natural Gas (CNG)	69	06/06-09/10	ENGINE Z 16 YNG								
Engine: All engines	Information:									9.6299 C10		
1.6 CNG	Petrol/ Compressed Natural Gas (CNG)	71	04/05-02/12	ENGINE Z 16 YNG								
Engine: All engines	Information:									9.6299 C10		
1.6 CNG 16V	Petrol/ Compressed Natural Gas (CNG)	69	06/06-02/12	ENGINE Y 16 YNG, Z 16 YNG								
Engine: All engines	Information: x 4, COIL ON PLUG, incl. spark plug connector									9.6299 C10		
1.6 CNG 16V	Petrol/ Compressed Natural Gas (CNG)	71	04/05-02/12	ENGINE Z 16 YNG								
Engine: All engines	Information: x 4, COIL ON PLUG, incl. spark plug connector									9.6299 C10		
COMBO D												
1.4	Petrol	70	11/11->	ENGINE A 14 FP								
Engine: All engines	Information: x 4, COIL ON PLUG									9.6342 C10		
CORSA												
1.2	Petrol	55	07/19->	ENGINE F 12 XEL (EB2FAD)								
Engine: All engines	Information: x 3, COIL ON PLUG									9.6509 C10		
CORSA B												
1.0 i 12V	Petrol	40	11/96-09/00	ENGINE X 10 XE								
Engine: All engines	Information:									9.6298 C10		
1.2 i	Petrol	33	03/93-09/00	ENGINE C 12 NZ, X 12 SZ								
Engine: Eng. C 12 NZ	Information: version Bosch						2.7530/26PHT	3.7573/21RS				
Eng. C 12 NZ	version Lucas						2.8100PHT	3.8128RS				
Eng. C 12 NZ										9.6040 C10	9.4036	
All engines	ch. 19019894 ->, ->ch. 19334654											4.7195
All engines	ch. 19334657 ->											4.7199
All engines	->ch. 19019893											4.9237

A10	CONDENSER	A20	CONTACT SET	A40	DISTRIBUTOR CAP	A50	ROTOR	A70	PICK-UP
C10	COIL	C20	IGNITION MODULE	C30	ELECTRONIC IGNITION KIT	E01	IGNITION CABLE SET		

The present application list is a brief version. For the detailed information about the possibility of installation on a specific vehicle, please refer to our web-catalogue http://catalogo.facet.eu/

Vehicle	alim.	kW	Date	Engine	FUNCTIONS ON THE VEHICLE A10	A20	A40	A50	A70	C10 - C30	C20	E01
1.2 i 16V	Petrol	48	03/98-09/00	ENGINE X 12 XE								

Engine	Information	A10	A20	A40	A50	A70	C10 - C30		C20	E01
All engines							9.6300	C10		

1.4 i	Petrol	44	03/93-09/00	ENGINE C 14 NZ, X 14 SZ

Engine	Information	A10	A20	A40	A50	A70	C10 - C30		C20	E01
Eng. C 14 NZ	version Bosch			2.7530/26PHT	3.7573/21RS					
Eng. C 14 NZ	version Lucas			2.8100PHT	3.8128RS					
Eng. C 14 NZ							9.6040	C10	9.4036	
Eng. C 14 NZ	->ch. 02BF1475, 19241622									4.7195
Eng. C 14 NZ	ch. 02BF1476, 19241623 ->, -air conditioning									4.7199
Eng. C 14 NZ	ch. 02BF1476, 19241623 ->, +air conditioning									4.9529
Eng. X 14 SZ	ch. 02HY3580 ->									4.9904

1.4 i 16V	Petrol	66	09/94-09/00	ENGINE X 14 XE

Engine	Information	A10	A20	A40	A50	A70	C10 - C30		C20	E01
All engines	->ch. 20C17331									4.8688
All engines	ch. 20C17332 ->									4.9559

1.4 i S	Petrol	60	03/93-09/00	ENGINE C 14 SE

Engine	Information	A10	A20	A40	A50	A70	C10 - C30		C20	E01
All engines	->ch. 02BD1412, 19262000									4.8634
All engines	ch. 02HY3580 ->									4.9904

1.6 GSI 16V	Petrol	80	03/93-09/00	ENGINE C 16 XE

Engine	Information	A10	A20	A40	A50	A70	C10 - C30		C20	E01
All engines	->ch. 20C17331									4.8688
All engines	ch. 20C17332 ->									4.9559

1.6 i 16V	Petrol	78	09/94-09/00	ENGINE X 16 XE

Engine	Information	A10	A20	A40	A50	A70	C10 - C30		C20	E01
All engines	->ch. 20C17331									4.8688
All engines	ch. 20C17332 ->									4.9559

CORSA C

1.0 12V	Petrol	43	09/00-10/03	ENGINE Z 10 XE

Engine	Information	A10	A20	A40	A50	A70	C10 - C30		C20	E01
All engines	x 3, BOSCH, COIL ON PLUG						9.6298	C10		

1.0 12V	Petrol	44	11/03-10/06	ENGINE Z 10 XEP

Engine	Information	A10	A20	A40	A50	A70	C10 - C30		C20	E01
All engines	x 3, BOSCH, COIL ON PLUG, 12 Volt, Dia: 55 mm, for pre-resistance						9.6298	C10		

1.2 16V	Petrol	55	09/00-10/06	ENGINE Z 12 XE

Engine	Information	A10	A20	A40	A50	A70	C10 - C30		C20	E01
All engines	->ch. 36999999, ch. 37000000 ->, x 1, x 4, BOSCH, COIL ON PLUG, incl. spark plug connector						9.6300	C10		

1.2 16V Dualfuel	Petrol/ Liquified Petro-leum Gas (LPG)	55	08/01-10/06	ENGINE Z 12 XE

Engine	Information	A10	A20	A40	A50	A70	C10 - C30		C20	E01
All engines	->ch. 36999999, ch. 37000000 ->, x 1, x 4, BOSCH, COIL ON PLUG, incl. spark plug connector						9.6300	C10		

1.2 Twinport	Petrol	59	07/04-10/06	ENGINE Z 12 XEP

Engine	Information	A10	A20	A40	A50	A70	C10 - C30		C20	E01
All engines	x 1, BOSCH, COIL ON PLUG, incl. spark plug connector						9.6300	C10		

A10	CONDENSER	A20	CONTACT SET	A40	DISTRIBUTOR CAP	A50	ROTOR	A70	PICK-UP
C10	COIL	C20	IGNITION MODULE	C30	ELECTRONIC IGNITION KIT	E01	IGNITION CABLE SET		

The present application list is a brief version. For the detailed information about the possibility of installation on a specific vehicle, please refer to our web-catalogue http://catalogo.facet.eu/

Vehicle	alim.	kW	Date	Engine	FUNCTIONS ON THE VEHICLE							
					A10	A20	A40	A50	A70	C10 - C30	C20	E01
1.4 16V	Petrol	66	09/00-10/06	ENGINE Z 14 XE								
Engine: All engines — Information: x 4, COIL ON PLUG, incl. spark plug connector										9.6299 C10		
1.4 Twinport	Petrol	66	06/03-10/06	ENGINE Z 14 XEP								
Engine: All engines — Information: x 1, BOSCH, COIL ON PLUG, incl. spark plug connector										9.6300 C10		
1.8 16V	Petrol	92	08/00-09/06	ENGINE Z 18 XE								
Engine: All engines — Information: x 1, COIL ON PLUG, incl. spark plug connector										9.6408 C10		
CORSA D												
1.0	Petrol	44	08/06-08/14	ENGINE Z 10 XEP								
Engine: All engines — Information: x 3, BOSCH, COIL ON PLUG, 12 Volt, Dia: 55 mm, for pre-resistance										9.6298 C10		
1.2	Petrol	51	06/10-08/14	ENGINE A 12 XEL								
Engine: All engines — Information: x 1, COIL ON RAIL										9.6447 C10		
1.2	Petrol	59	08/06-08/14	ENGINE Z 12 XEP								
Engine: All engines — Information: x 1, BOSCH, COIL ON PLUG, incl. spark plug connector										9.6300 C10		
1.2 i 16V	Petrol	63	12/09-08/14	ENGINE A 12 XER								
Engine: All engines — Information: x 1, COIL ON RAIL										9.6447 C10		
1.2 LPG	Petrol/ Liquified Petro-leum Gas (LPG)	59	09/09-08/14	ENGINE Z 12 XEP								
Engine: All engines — Information: x 1, BOSCH, COIL ON PLUG, incl. spark plug connector										9.6300 C10		
1.2 LPG	Petrol/ Liquified Petro-leum Gas (LPG)	61	06/11-08/14	ENGINE A 12 XER								
Engine: All engines — Information:										9.6447 C10		
1.2 LPG	Petrol/ Liquified Petro-leum Gas (LPG)	63	08/11-08/14	ENGINE A 12 XER								
Engine: All engines — Information: x 1, COIL ON RAIL										9.6447 C10		
1.4	Petrol	64	09/09-08/14	ENGINE A 14 XEL								
Engine: All engines — Information:										9.6447 C10		
1.4	Petrol	66	08/06-08/14	ENGINE Z 14 XEP								
Engine: All engines — Information: x 1, BOSCH, COIL ON PLUG, incl. spark plug connector										9.6300 C10		
1.4	Petrol	74	01/10-08/14	ENGINE A 14 XER								
Engine: All engines — Information: x 1, COIL ON RAIL										9.6447 C10		

A10	CONDENSER	A20	CONTACT SET	A40	DISTRIBUTOR CAP	A50	ROTOR	A70	PICK-UP
C10	COIL	C20	IGNITION MODULE	C30	ELECTRONIC IGNITION KIT	E01	IGNITION CABLE SET		

The present application list is a brief version. For the detailed information about the possibility of installation on a specific vehicle, please refer to our web-catalogue http://catalogo.facet.eu/

Vehicle	alim.	kW	Date	Engine	FUNCTIONS ON THE VEHICLE: A10	A20	A40	A50	A70	C10 - C30	C20	E01
1.4	Petrol	88	08/12-08/14	ENGINE: A 14 NEL								
Engine: All engines	Information: x 1, COIL ON RAIL									9.6447 C10		
1.4 LPG	Petrol/ Liquified Petro-leum Gas (LPG)	64	09/09-08/14	ENGINE: A 14 XEL								
Engine: All engines	Information:									9.6447 C10		
1.4 LPG	Petrol/ Liquified Petro-leum Gas (LPG)	66	07/06-08/14	ENGINE: Z 14 XEP								
Engine: All engines	Information: x 1, BOSCH, COIL ON PLUG, incl. spark plug connector									9.6300 C10		
1.6 SRi	Petrol	110	05/07-08/14	ENGINE: A 16 LEL, Z 16 LEL								
Engine: All engines	Information: x 1, DELPHI, COIL ON PLUG, incl. spark plug connector									9.6350 C10		
1.6 VXR	Petrol	141	11/06-08/14	ENGINE: A 16 LER, B16LER, Z 16 LER								
Engine: All engines	Information: x 1, DELPHI, COIL ON PLUG, incl. spark plug connector									9.6350 C10		
1.6 VXR	Petrol	150	06/11-08/14	ENGINE: A 16 LES, Z 16 LER								
Engine: Eng. A 16 LES	Information: x 1, DELPHI, COIL ON PLUG, incl. spark plug connector									9.6350 C10		
Engine: Eng. Z 16 LER	Information:									9.6350 C10		
1.6 VXR	Petrol	154	06/11-08/14	ENGINE: A 16 LES								
Engine: All engines	Information: x 1, DELPHI, COIL ON PLUG, incl. spark plug connector									9.6350 C10		
1.6 VXR	Petrol	155	06/11-03/12	ENGINE: A 16 LES								
Engine: All engines	Information: x 1, DELPHI, COIL ON PLUG, incl. spark plug connector									9.6350 C10		
CORSA E												
1.0	Petrol	66	08/14->	ENGINE: B 10 XFL, D 10 XFL, F 10 XFL								
Engine: All engines	Information: x 3, COIL ON PLUG									9.6531 C10		
1.0	Petrol	85	08/14->	ENGINE: B 10 XFT, D 10 XFT								
Engine: All engines	Information: x 3, COIL ON PLUG									9.6531 C10		
1.2	Petrol	51	08/14->	ENGINE: B 12 XEL								
Engine: All engines	Information: x 1, COIL ON RAIL									9.6447 C10		
1.4	Petrol	110	07/15->	ENGINE: B 14 NEH								
Engine: All engines	Information: x 1, COIL ON RAIL									9.6447 C10		
1.4	Petrol	55	09/14->	ENGINE: B 14 XEJ								
Engine: All engines	Information: x 1, COIL ON RAIL									9.6447 C10		

A10	CONDENSER	A20	CONTACT SET	A40	DISTRIBUTOR CAP	A50	ROTOR	A70	PICK-UP
C10	COIL	C20	IGNITION MODULE	C30	ELECTRONIC IGNITION KIT	E01	IGNITION CABLE SET		

The present application list is a brief version. For the detailed information about the possibility of installation on a specific vehicle, please refer to our web-catalogue http://catalogo.facet.eu/

Vehicle	alim.	kW	Date	Engine	FUNCTIONS ON THE VEHICLE A10	A20	A40	A50	A70	C10 - C30	C20	E01
1.4	Petrol	66	08/14->	ENGINE B 14 XEJ, B 14 XEL, D 14 XEL								
Eng. B 14 XEJ										9.6447 C10		
Eng. B 14 XEL, D 14 XEL				x 1, COIL ON RAIL						9.6447 C10		
1.4	Petrol	74	08/14->	ENGINE B14NEJ, D 14 NEJ								
All engines				x 1, COIL ON RAIL						9.6447 C10		
1.4 LPG	Petrol/ Liquified Petro-leum Gas (LPG)	66	08/14->	ENGINE B 14 XEL								
All engines										9.6447 C10		
1.6 VXR	Petrol	151	04/15->	ENGINE B 16 LES								
All engines				x 1, COIL ON PLUG						9.6445 C10		
CORSAVAN I												
1.4 i	Petrol	44	01/94-09/00	ENGINE C 14 NZ								
All engines				version Bosch			2.7530/26PHT	3.7573/21RS				
All engines				version Lucas			2.8100PHT	3.8128RS				
All engines										9.6040 C10	9.4036	
All engines				->ch. 02BF1475, 19241622								4.7195
All engines				ch. 02BF1476, 19241623 ->, -air conditioning								4.7199
All engines				ch. 02BF1476, 19241623 ->, +air conditioning								4.9529
CORSAVAN II												
1.2 16V	Petrol	55	09/00-06/06	ENGINE Z 12 XE								
All engines				->ch. 36999999, ch. 37000000 ->, x 1, x 4, BOSCH, COIL ON PLUG, incl. spark plug connector						9.6300 C10		
1.2 16V	Petrol	59	07/04-11/06	ENGINE Z 12 XEP								
All engines				x 1, BOSCH, COIL ON PLUG, incl. spark plug connector						9.6300 C10		
1.2 16V Dualfuel	Petrol/ Liquified Petro-leum Gas (LPG)	55	08/01-06/06	ENGINE Z 12 XE								
All engines				->ch. 36999999, ch. 37000000 ->, x 1, x 4, BOSCH, COIL ON PLUG, incl. spark plug connector						9.6300 C10		
1.2 16V Dualfuel	Petrol/ Liquified Petro-leum Gas (LPG)	59	07/04-12/05	ENGINE Z 12 XEP								
All engines				x 1, BOSCH, COIL ON PLUG, incl. spark plug connector						9.6300 C10		
1.4	Petrol	66	11/03-06/06	ENGINE Z 14 XEP								
All engines				x 1, BOSCH, COIL ON PLUG, incl. spark plug connector						9.6300 C10		
CORSAVAN III												
1.2	Petrol	51	01/10->	ENGINE A 12 XEL								
All engines				x 1, COIL ON RAIL						9.6447 C10		

A10	CONDENSER	A20	CONTACT SET	A40	DISTRIBUTOR CAP	A50	ROTOR	A70	PICK-UP
C10	COIL	C20	IGNITION MODULE	C30	ELECTRONIC IGNITION KIT	E01	IGNITION CABLE SET		

The present application list is a brief version. For the detailed information about the possibility of installation on a specific vehicle, please refer to our web-catalogue http://catalogo.facet.eu/

Vehicle	alim.	kW	Date	Engine	FUNCTIONS ON THE VEHICLE: A10	A20	A40	A50	A70	C10 - C30	C20	E01
1.2	Petrol	59	07/09->	Z 12 XEP								

Engine	Information	A10	A20	A40	A50	A70	C10 - C30	C20	E01
All engines	x 1, BOSCH, COIL ON PLUG, incl. spark plug connector						9.6300 C10		

CORSAVAN IV

1.2	Petrol	51	10/14->	B 12 XEL								

Engine	Information	A10	A20	A40	A50	A70	C10 - C30	C20	E01
All engines	x 1, COIL ON RAIL						9.6447 C10		

1.4	Petrol	55	10/14->	B 14 XEJ								

Engine	Information	A10	A20	A40	A50	A70	C10 - C30	C20	E01
All engines							9.6447 C10		

CRESTA

2.7	Petrol	84	01/64-10/72	--								

Engine	Information	A10	A20	A40	A50	A70	C10 - C30	C20	E01
All engines					3.7590				

3.3	Petrol	91	01/64-10/72	--								

Engine	Information	A10	A20	A40	A50	A70	C10 - C30	C20	E01
All engines					3.7590				

CROSSLAND X

1.2	Petrol	61	03/17->	B 12 XE (EB2F), D 12 XE (EB2FA), F12XE(EB2FA)								

Engine	Information	A10	A20	A40	A50	A70	C10 - C30	C20	E01
All engines	x 3, COIL ON PLUG						9.6509 C10		

1.2	Petrol	81	03/17->	B 12 XHL (EB2DT)								

Engine	Information	A10	A20	A40	A50	A70	C10 - C30	C20	E01
All engines	x 3, COIL ON PLUG						9.6520 C10		

1.2	Petrol	96	03/17->	B 12 XHT (EB2DTS)								

Engine	Information	A10	A20	A40	A50	A70	C10 - C30	C20	E01
All engines	x 3, COIL ON PLUG						9.6520 C10		

FIRENZA

1300	Petrol	40	01/71-10/73	--								

Engine	Information	A10	A20	A40	A50	A70	C10 - C30	C20	E01
All engines					3.7590				

FRONTERA A

2.0	Petrol	85	04/95-08/98	C 20 NE, X 20 SE								

Engine	Information	A10	A20	A40	A50	A70	C10 - C30	C20	E01
Eng. C 20 NE	version Bosch			2.7530/27PHT	3.7573/27RS				
Eng. C 20 NE	version Ducellier			2.7684PHT	3.7703RS				
Eng. C 20 NE							9.6092 C10		
Eng. X 20 SE							9.6173 C10		4.9947
Eng. C 20 NE	->eng. 14672353								4.8527
Eng. C 20 NE	eng. type 14672354 ->								4.8689

2.0 i	Petrol	85	03/92-10/98	C 20 NE, X 20 SE								

Engine	Information	A10	A20	A40	A50	A70	C10 - C30	C20	E01
Eng. C 20 NE	version Bosch			2.7530/27PHT	3.7573/27RS				
Eng. C 20 NE	version Ducellier			2.7684PHT	3.7703RS				
Eng. C 20 NE							9.6092 C10		
Eng. X 20 SE							9.6173 C10		4.9947
Eng. C 20 NE	->eng. 14672353								4.8527
Eng. C 20 NE	eng. type 14672354 ->								4.8689

A10	CONDENSER	A20	CONTACT SET	A40	DISTRIBUTOR CAP	A50	ROTOR	A70	PICK-UP
C10	COIL	C20	IGNITION MODULE	C30	ELECTRONIC IGNITION KIT	E01	IGNITION CABLE SET		

The present application list is a brief version. For the detailed information about the possibility of installation on a specific vehicle, please refer to our web-catalogue http://catalogo.facet.eu/

Vehicle	alim.	kW	Date	Engine	FUNCTIONS ON THE VEHICLE							
					A10	A20	A40	A50	A70	C10 - C30	C20	E01
2.2 i	Petrol	100	03/95-10/98	ENGINE: X 22 XE								
All engines										9.6173 C10		
2.4 i	Petrol	92	03/92-10/98	ENGINE: C 24 NE								
All engines	version Bosch						2.7530/26PHT	3.7573/21RS				
All engines										9.6092 C10		
GRANDLAND X												
1.2 Turbo	Petrol	96	06/17->	ENGINE: B 12 XHT (EB2DTS)								
All engines	x 3, COIL ON PLUG									9.6520 C10		
1.6 Turbo Hybrid	Petrol/ Electric	133	12/19->	ENGINE: D 16 XHT (EP6FADTXHP)								
All engines	x 4, COIL ON PLUG									9.6375 C10		
1.6 Turbo Hybrid	Petrol/ Electric	165	12/19->	ENGINE: D 16 XHT (EP6FADTXHP)								
All engines	x 4, COIL ON PLUG									9.6375 C10		
1.6 Turbo Hybrid4	Petrol/ Electric	147	06/19->	ENGINE: D 16 XHT (EP6FADTXHP)								
All engines	x 4, COIL ON PLUG									9.6375 C10		
1.6 Turbo Hybrid4	Petrol/ Electric	221	06/19->	ENGINE: D 16 XHT (EP6FADTXHP)								
All engines	x 4, COIL ON PLUG									9.6375 C10		
INSIGNIA												
1.4	Petrol	103	04/11-05/17	ENGINE: A 14 NET, B 14 NET								
All engines	x 1, COIL ON RAIL									9.6447 C10		
1.4 LPG	Petrol/ Liquified Petro-leum Gas (LPG)	103	07/12-05/17	ENGINE: A 14 NET								
All engines	x 1, COIL ON RAIL									9.6447 C10		
1.5	Petrol	103	03/17->	ENGINE: B 15 SFL, D 15 SFL								
All engines	x 4, COIL ON PLUG									9.6531 C10		
1.5	Petrol	121	03/17->	ENGINE: B 15 SFT, D 15 SFT, D15XHT								
All engines	x 4, COIL ON PLUG									9.6531 C10		
1.6	Petrol	85	07/08-05/17	ENGINE: A 16 XER								
All engines										9.6445 C10		
All engines	x 1, COIL ON PLUG									9.6445 C10		

A10	CONDENSER	**A20**	CONTACT SET	**A40**	DISTRIBUTOR CAP	**A50**	ROTOR	**A70**	PICK-UP
C10	COIL	**C20**	IGNITION MODULE	**C30**	ELECTRONIC IGNITION KIT	**E01**	IGNITION CABLE SET		

The present application list is a brief version. For the detailed information about the possibility of installation on a specific vehicle, please refer to our web-catalogue http://catalogo.facet.eu/

Vehicle	alim.	kW	Date	Engine	FUNCTIONS ON THE VEHICLE: A10	A20	A40	A50	A70	C10 - C30	C20	E01
1.6 Turbo	Petrol	132	01/09-05/17	ENGINE: A 16 LET								
Engine: All engines	Information: x 1, DELPHI, COIL ON PLUG, incl. spark plug connector									9.6350 C10		
1.8	Petrol	103	07/08-05/17	ENGINE: A 18 XER, B 18 XER								
Engine: All engines	Information: x 1, COIL ON PLUG									9.6445 C10		
Eng. B 18 XER										9.6445 C10		
MERIVA I												
1.4 16V Twinport	Petrol	66	01/03-06/10	ENGINE: Z 14 XEP								
Engine: All engines	Information: x 1, BOSCH, COIL ON PLUG, incl. spark plug connector									9.6300 C10		
1.6 i	Petrol	64	01/03-06/10	ENGINE: Z 16 SE								
Engine: All engines	Information:											4.9904
1.6 i 16V	Petrol	74	01/03-09/05	ENGINE: Z 16 XE								
Engine: All engines	Information: x 4, COIL ON PLUG, incl. spark plug connector									9.6299 C10		
1.6 i 16V Twinport	Petrol	77	05/03-06/10	ENGINE: Z 16 XEP								
Engine: All engines	Information: x 1, DELPHI, COIL ON PLUG, incl. spark plug connector									9.6350 C10		
1.6 Turbo	Petrol	132	05/06-06/10	ENGINE: Z 16 LET								
Engine: All engines	Information: x 1, DELPHI, COIL ON PLUG, incl. spark plug connector									9.6350 C10		
1.8 i 16V	Petrol	92	05/03-06/10	ENGINE: Z 18 XE								
Engine: All engines	Information: x 1, COIL ON PLUG, incl. spark plug connector									9.6408 C10		
MERIVA II												
1.4	Petrol	103	06/10->	ENGINE: A 14 NET, B 14 NET								
Engine: All engines	Information: x 1, COIL ON RAIL									9.6447 C10		
1.4	Petrol	74	06/10->	ENGINE: A 14 XER, B 14 XER								
Engine: All engines	Information: x 1, COIL ON RAIL									9.6447 C10		
1.4	Petrol	88	06/10->	ENGINE: A 14 NEL, B 14 NEL								
Engine: All engines	Information: x 1, COIL ON RAIL									9.6447 C10		
1.4 LPG	Petrol/ Liquified Petro-leum Gas (LPG)	88	06/11->	ENGINE: A 14 NEL, B 14 NEL								
Engine: Eng. A 14 NEL	Information: x 1, COIL ON RAIL									9.6447 C10		
Eng. B 14 NEL										9.6447 C10		
MOKKA / MOKKA X												
1.4	Petrol	103	04/13->	ENGINE: A 14 NET, B 14 NET, D 14 NET								
Engine: All engines	Information: x 1, COIL ON RAIL									9.6447 C10		

A10	CONDENSER	**A20**	CONTACT SET	**A40**	DISTRIBUTOR CAP	**A50**	ROTOR	**A70**	PICK-UP
C10	COIL	**C20**	IGNITION MODULE	**C30**	ELECTRONIC IGNITION KIT	**E01**	IGNITION CABLE SET		

The present application list is a brief version. For the detailed information about the possibility of installation on a specific vehicle, please refer to our web-catalogue http://catalogo.facet.eu/

Vehicle	alim.	kW	Date	Engine	FUNCTIONS ON THE VEHICLE A10	A20	A40	A50	A70	C10 - C30	C20	E01
1.4 4x4	Petrol	103	06/12->	A 14 NET, B 14 NET, D 14 NET								
Engine: All engines — Information: x 1, COIL ON RAIL										9.6447 C10		
1.4 4x4	Petrol	112	06/16->	B 14 XFT								
Engine: All engines — Information: x 4, COIL ON PLUG										9.6531 C10		
1.6	Petrol	85	06/12->	A 16 XER, B 16 XER, D 16 XER								
Engine: All engines — Information: x 1, COIL RAILS										9.6445 C10		
OMEGA B												
2.0	Petrol	85	03/94-09/99	20 SE, X 20 SE								
Eng. 20 SE — ->ch. K1999999, version Bosch							2.7530/10PHT					
Eng. 20 SE — ch. L1000001 ->, version Bosch							2.7530/27PHT					
Eng. 20 SE — version Ducellier							2.7684PHT	3.7703RS				
Eng. 20 SE — version Bosch								3.7573/27RS				
Eng. 20 SE — ->eng. 14180385, ch. K1000099 ->										9.6091 C10		
Eng. 20 SE — eng. type 14180386 ->										9.6092 C10		
Eng. 20 SE — ->ch. K1000098										9.6094 C10		
Eng. X 20 SE										9.6173 C10		
Eng. 20 SE — ->eng. 14312950, eng. type 14180386 ->												4.8527
Eng. 20 SE — eng. type 14312951 ->												4.8689
2.0 16V	Petrol	100	03/94-07/01	X 20 XEV								
Engine: All engines										9.6172 C10		4.9562
SIGNUM												
1.8	Petrol	103	08/05-05/08	Z 18 XER								
Engine: All engines — Information: x 1, DELPHI, COIL ON PLUG, incl. spark plug connector										9.6350 C10		
1.8	Petrol	90	06/03-07/05	Z 18 XE								
Engine: All engines — Information: x 1, COIL ON PLUG, incl. spark plug connector										9.6408 C10		
SINTRA												
2.2 i 16 V	Petrol	104	11/96-04/99	X 22 XE								
Engine: All engines — Information: x 1, D.I.S.										9.6289 C10		
Engine: All engines												4.9562
SPEEDSTER												
2.0 Turbo	Petrol	147	03/01-09/06	Z 20 LET								
Engine: All engines										9.6407 C10		
VXR20	Petrol	162	03/01-09/06	Z 20 LET								
Engine: All engines										9.6407 C10		
TIGRA A												
1.4 16V	Petrol	66	07/94-12/00	X 14 XE								
Engine: All engines — Information: ->ch. 20C17331												4.8688
Engine: All engines — Information: ch. 20C17332 ->												4.9559

A10	CONDENSER	A20	CONTACT SET	A40	DISTRIBUTOR CAP	A50	ROTOR	A70	PICK-UP
C10	COIL	C20	IGNITION MODULE	C30	ELECTRONIC IGNITION KIT	E01	IGNITION CABLE SET		

The present application list is a brief version. For the detailed information about the possibility of installation on a specific vehicle, please refer to our web-catalogue http://catalogo.facet.eu/

Vehicle	alim.	kW	Date	Engine	FUNCTIONS ON THE VEHICLE A10	A20	A40	A50	A70	C10 - C30	C20	E01
				ENGINE								
1.6 16V	Petrol	78	07/94-12/00	X 16 XE								
Engine	Information											
All engines	->ch. 20C17331											4.8688
All engines	ch. 20C17332 ->											4.9559
TIGRA B												
				ENGINE								
1.4	Petrol	66	06/04-08/09	Z 14 XEP								
Engine	Information											
All engines	x 1, BOSCH, COIL ON PLUG, incl. spark plug connector									9.6300 C10		
				ENGINE								
1.8	Petrol	92	06/04-08/09	Z 18 XE								
Engine	Information											
All engines	x 1, COIL ON PLUG, incl. spark plug connector									9.6408 C10		
VECTRA B												
				ENGINE								
1.6 i	Petrol	55	08/95-03/02	X 16 SZR								
Engine	Information											
All engines	->eng. 02HP7704											4.9531
All engines	eng. type 02HP7705 ->											4.9904
				ENGINE								
1.6 i 16V	Petrol	74	08/95-03/02	X 16 XEL, Y 16 XE, Z 16 XE								
Engine	Information											
All engines	ch. W1285447 ->, ch. W5 ->, ch. W7154259 ->, ch. WL ->, ch. WP ->, ch. WS ->, x 1, COIL ON PLUG, incl. spark plug connector									9.6299 C10		
All engines	ch. W1285447, W7154259 ->									9.6299 C10		
Eng. X 16 XEL	->ch. W1285449, ->ch. W5276825, ->ch. W7154258											4.8688
				ENGINE								
1.8 Dualfuel	Petrol/ Liquified Petro-leum Gas (LPG)	92	09/00-07/03	Z 18 XE								
Engine	Information											
All engines	x 1, COIL ON PLUG, incl. spark plug connector									9.6408 C10		
				ENGINE								
1.8 i 16V	Petrol	85	09/95-09/00	X 18 XE, X 18 XE1, Z 18 XEL								
Engine	Information											
Eng. X 18 XE										9.6172 C10		
Eng. X 18 XE	x 1, D.I.S.									9.6172 C10		
Eng. X 18 XE1	x 1, COIL ON PLUG, incl. spark plug connector									9.6408 C10		
Eng. X 18 XE1, Z 18 XEL										9.6408 C10		
Eng. X 18 XE	no specific info conc. application available											4.9506, 4.9562
				ENGINE								
1.8 i 16V	Petrol	92	09/00-07/03	Z 18 XE								
Engine	Information											
All engines	x 1, COIL ON PLUG, incl. spark plug connector									9.6408 C10		
				ENGINE								
2.0 Dualfuel	Petrol/ Liquified Petro-leum Gas (LPG)	100	05/98-01/01	X 20 XEV								
Engine	Information											
All engines	x 1, D.I.S.									9.6172 C10		
				ENGINE								
2.0 i	Petrol	82	10/95-03/02	20 NEJ								
Engine	Information											
All engines										9.6173 C10		
				ENGINE								
2.0 i 16V	Petrol	100	10/95-01/01	X 20 XEV								
Engine	Information											
All engines	x 1, D.I.S.									9.6172 C10		

A10	CONDENSER	A20	CONTACT SET	A40	DISTRIBUTOR CAP	A50	ROTOR	A70	PICK-UP
C10	COIL	C20	IGNITION MODULE	C30	ELECTRONIC IGNITION KIT	E01	IGNITION CABLE SET		

The present application list is a brief version. For the detailed information about the possibility of installation on a specific vehicle, please refer to our web-catalogue http://catalogo.facet.eu/

Vehicle	alim.	kW	Date	Engine	FUNCTIONS ON THE VEHICLE A10	A20	A40	A50	A70	C10 - C30	C20	E01
2.0 i 16V	Petrol	100	10/95-01/01	**X 20 XEV**								
Engine: All engines — Information: no specific info conc. application available												4.9506, 4.9562
VECTRA C												
1.6 16V	Petrol	74	06/04-07/08	**Z 16 XE**								
Engine: All engines										9.6299 C10		
1.6 16V	Petrol	77	01/06-07/08	**Z 16 XEP**								
Engine: All engines										9.6350 C10		
1.8	Petrol	103	01/06-07/08	**Z 18 XER**								
Engine: All engines — Information: x 1, DELPHI, COIL ON PLUG, incl. spark plug connector										9.6350 C10		
1.8	Petrol	81	04/02-07/08	**Z 18 XEL**								
Engine: All engines										9.6408 C10		
1.8 16V	Petrol	90	04/02-07/08	**Z 18 XE**								
Engine: All engines — Information: x 1, COIL ON PLUG, incl. spark plug connector										9.6408 C10		
1.8 16V Dualfuel	Petrol/ Liquified Petro-leum Gas (LPG)	90	04/02-07/08	**Z 18 XE**								
Engine: All engines — Information: x 1, COIL ON PLUG, incl. spark plug connector										9.6408 C10		
VELOX												
2.7	Petrol	70	03/64-10/72	--								
Engine: All engines								3.7590				
3.3	Petrol	85	09/64-07/65	--								
Engine: All engines								3.7590				
VENTORA												
3300	Petrol	91	03/69-10/76	--								
Engine: All engines								3.7590				
VICTOR												
3000	Petrol	91	03/68-09/72	--								
Engine: All engines								3.7590				
VISCOUNT												
3300	Petrol	91	01/66-10/72	--								
Engine: All engines								3.7590				
VIVA												
1100	Petrol	33	01/63-10/66	--								
Engine: All engines								3.7590				

A10	CONDENSER	**A20**	CONTACT SET	**A40**	DISTRIBUTOR CAP	**A50**	ROTOR	**A70**	PICK-UP
C10	COIL	**C20**	IGNITION MODULE	**C30**	ELECTRONIC IGNITION KIT	**E01**	IGNITION CABLE SET		

The present application list is a brief version. For the detailed information about the possibility of installation on a specific vehicle, please refer to our web-catalogue http://catalogo.facet.eu/

Vehicle	alim.	kW	Date	Engine	FUNCTIONS ON THE VEHICLE							
					A10	A20	A40	A50	A70	C10 - C30	C20	E01
1100	Petrol	35	01/66-09/71	ENGINE --								
Engine: All engines	Information:							3.7590				
1100 SL90	Petrol	44	01/65-10/70	ENGINE --								
Engine: All engines	Information:							3.7590				
1256	Petrol	43	10/71-10/75	ENGINE --								
Engine: All engines	Information:							3.7590				
1256 E	Petrol	43	10/71-10/75	ENGINE --								
Engine: All engines	Information:							3.7590				
1300	Petrol	43	10/75-10/79	ENGINE --								
Engine: All engines	Information:							3.7590				
VIVARO												
2.0 16V	Petrol	88	08/01-07/14	ENGINE F4R 720								
Engine: All engines	Information: x 4, COIL ON PLUG									9.6332 C10		
2.0 ECOTEC	Petrol	86	08/06-07/14	ENGINE F4R 820								
Engine: All engines	Information: x 4, COIL ON PLUG									9.6332 C10		
VX220												
2.0 i Turbo	Petrol	147	03/01-07/05	ENGINE Z 20 LET								
Engine: All engines	Information: x 1, COIL ON PLUG									9.6407 C10		
2.0 VXR	Petrol	162	10/03-07/05	ENGINE Z 20 LET								
Engine: All engines	Information: x 1, COIL ON PLUG									9.6407 C10		
ZAFIRA A												
1.6 16V	Petrol	74	04/99-08/05	ENGINE X 16 XEL, Z 16 XE								
Engine: All engines	Information: x 4, COIL ON PLUG, incl. spark plug connector									9.6299 C10		
1.6 CNG	Petrol/ Compressed Natural Gas (CNG)	71	09/01-06/05	ENGINE Z 16 YNG								
Engine: All engines	Information: x 4, COIL ON PLUG, incl. spark plug connector									9.6299 C10		
1.6 Dualfuel	Petrol/ Liquified Petroleum Gas (LPG)	74	11/98-08/05	ENGINE X 16 XEL								
Engine: All engines	Information: x 4, COIL ON PLUG, incl. spark plug connector									9.6299 C10		
1.8 16V	Petrol	85	05/99-08/00	ENGINE X 18 XE1								
Engine: All engines	Information: x 1, COIL ON PLUG, incl. spark plug connector									9.6408 C10		

A10	CONDENSER	A20	CONTACT SET	A40	DISTRIBUTOR CAP	A50	ROTOR	A70	PICK-UP
C10	COIL	C20	IGNITION MODULE	C30	ELECTRONIC IGNITION KIT	E01	IGNITION CABLE SET		

The present application list is a brief version. For the detailed information about the possibility of installation on a specific vehicle, please refer to our web-catalogue http://catalogo.facet.eu/

Vehicle	alim.	kW	Date	Engine	FUNCTIONS ON THE VEHICLE A10	A20	A40	A50	A70	C10 - C30	C20	E01
1.8 16V	Petrol	92	09/00-08/05	ENGINE Z 18 XE								
Engine: All engines	Information: x 1, COIL ON PLUG, incl. spark plug connector									9.6408 C10		
1.8 Dualfuel	Petrol/ Liquified Petro-leum Gas (LPG)	92	09/00-08/05	ENGINE Z 18 XE								
Engine: All engines	Information: x 1, COIL ON PLUG, incl. spark plug connector									9.6408 C10		
2.0	Petrol	147	06/02-06/05	ENGINE Z 20 LET								
Engine: All engines	Information: x 1, COIL ON PLUG									9.6407 C10		
2.0 GSI Turbo	Petrol	141	09/01-06/05	ENGINE Z 20 LET								
Engine: All engines	Information: x 1, COIL ON PLUG									9.6407 C10		
ZAFIRA B												
1.6	Petrol	77	07/05-11/14	ENGINE Z 16 XE1, Z 16 XEP								
Engine: All engines	Information: x 1, DELPHI, COIL ON PLUG, incl. spark plug connector									9.6350 C10		
1.6	Petrol	85	12/07-11/14	ENGINE A 16 XER, Z 16 XER								
Engine: All engines	Information: x 1, DELPHI, COIL ON PLUG, incl. spark plug connector									9.6350 C10		
1.6 CNG	Petrol/ Com-pressed Natural Gas (CNG)	69	07/05-11/14	ENGINE Z 16 YNG								
Engine: All engines	Information:									9.6299 C10		
1.6 CNG Turbo	Petrol/ Com-pressed Natural Gas (CNG)	110	02/09-11/14	ENGINE A 16 XNT, Z 16 XNT								
Engine: All engines	Information:									9.6350 C10		
1.8	Petrol	103	04/05-11/14	ENGINE A 18 XER, Z 18 XER								
Engine: All engines	Information: x 1, DELPHI, COIL ON PLUG, incl. spark plug connector									9.6350 C10		
1.8	Petrol	88	04/13-11/14	ENGINE A 18 XEL								
Engine: All engines	Information: x 1, COIL ON PLUG									9.6445 C10		
2.0	Petrol	147	07/05-11/14	ENGINE Z 20 LER								
Engine: All engines	Information: x 1, COIL ON PLUG									9.6407 C10		
2.0	Petrol	176	01/06-11/14	ENGINE Z 20 LEH								
Engine: All engines	Information: x 1, COIL ON PLUG									9.6407 C10		

A10	CONDENSER	A20	CONTACT SET	A40	DISTRIBUTOR CAP	A50	ROTOR	A70	PICK-UP
C10	COIL	C20	IGNITION MODULE	C30	ELECTRONIC IGNITION KIT	E01	IGNITION CABLE SET		

The present application list is a brief version. For the detailed information about the possibility of installation on a specific vehicle, please refer to our web-catalogue http://catalogo.facet.eu/

Vehicle	alim.	kW	Date	Engine	FUNCTIONS ON THE VEHICLE							
					A10	A20	A40	A50	A70	C10 - C30	C20	E01
ZAFIRA C												
				ENGINE								
1.4	Petrol	103	10/11-08/18	A 14 NET, B 14 NET								
Engine		Information										
All engines		x 1, COIL ON RAIL								9.6447 C10		
				ENGINE								
1.4	Petrol	88	10/11-08/18	A 14 NEL								
Engine		Information										
All engines		x 1, COIL ON RAIL								9.6447 C10		
				ENGINE								
1.4 LPG	Petrol/ Liquified Petro-leum Gas (LPG)	103	10/11-08/18	A 14 NET								
Engine		Information										
All engines										9.6447 C10		
				ENGINE								
1.6 CNG	Petrol/ Com-pressed Natural Gas (CNG)	110	10/11-08/18	A 16 XNT								
Engine		Information										
All engines		x 1, DELPHI, COIL ON PLUG, incl. spark plug connector								9.6350 C10		
				ENGINE								
1.8	Petrol	103	10/11-08/18	A 18 XER								
Engine		Information										
All engines		x 1, COIL ON PLUG								9.6445 C10		
				ENGINE								
1.8	Petrol	85	10/11-08/18	A 18 XEL								
Engine		Information										
All engines		x 1, COIL ON PLUG								9.6445 C10		
				ENGINE								
1.8	Petrol	88	10/11->	A 18 XEL								
Engine		Information										
All engines										9.6445 C10		

A10	CONDENSER	A20	CONTACT SET	A40	DISTRIBUTOR CAP	A50	ROTOR	A70	PICK-UP
C10	COIL	C20	IGNITION MODULE	C30	ELECTRONIC IGNITION KIT	E01	IGNITION CABLE SET		

The present application list is a brief version. For the detailed information about the possibility of installation on a specific vehicle, please refer to our web-catalogue http://catalogo.facet.eu/

Vehicle	alim.	kW	Date	Engine	FUNCTIONS ON THE VEHICLE A10	A20	A40	A50	A70	C10 - C30	C20	E01
CADDY												
1.6i	Petrol	66	11/98->	MY4			2.7494PHT	3.7573/21RS				
									8.2733	9.8114 C30		
GOL												
1.0i	Petrol	0	11/96->	510			2.7494PHT	3.7573/21RS	8.2733			
1.0i 16v	Petrol	0	09/97->	511			2.7494PHT	3.7573/21RS	8.2733			
1.0i 16v Turbo	Petrol	0	06/00->	512						9.8120 C30		
1.6i	Petrol	0	10/96->	540, 541			2.7494PHT	3.7573/21RS	8.2733			
1.8i	Petrol	0	10/96->	542, 543			2.7494PHT	3.7573/21RS	8.2733			
2.0i	Petrol	0	09/94->	528, 529, 546, 547			2.7494PHT					
								3.7555RS	8.2660			
								3.7573/21RS	8.2733			
2.0i 16V	Petrol	0	10/95->	112						9.6068 C10		
GOLF												
A4 1.6i	Petrol	74	10/99->	AKL						9.8120 C30		4.9484
A4 1.8i Turbo 20v	Petrol	110	10/99->	AGU						9.6254 C10		
										9.6254S C10		
A4 2.0i	Petrol	85	08/99->	APK						9.8120 C30		4.9585
LOGUS												
2.0i	Petrol	0	12/92-12/96	526, 527, 809			2.7494PHT	3.7555RS	8.2660			
								3.7573/21RS				
PARATI												
1.0i 16v	Petrol	0	09/97->	511			2.7494PHT	3.7573/21RS	8.2733			

Engine	Information	A10	A20	A40	A50	A70	C10 - C30	C20	E01
All engines	version Bosch			2.7494PHT	3.7573/21RS				
All engines						8.2733	9.8114 C30		
All engines	version Bosch					8.2733			
All engines	version Bosch			2.7494PHT	3.7573/21RS	8.2733			
All engines							9.8120 C30		
All engines	version Bosch			2.7494PHT	3.7573/21RS	8.2733			
All engines	version Bosch			2.7494PHT	3.7573/21RS	8.2733			
All engines	version Bosch			2.7494PHT					
Eng. 528, 529	version Bosch				3.7555RS	8.2660			
Eng. 546, 547	version Bosch				3.7573/21RS	8.2733			
All engines							9.6068 C10		
All engines							9.8120 C30		4.9484
All engines	incl. spark plug connector, Qty: 4						9.6254 C10		
All engines	without spark plug connector, Qty: 4						9.6254S C10		
All engines							9.8120 C30		4.9585
Eng. 526, 527	version Bosch			2.7494PHT	3.7555RS	8.2660			
Eng. 809	version Bosch				3.7573/21RS				
All engines	version Bosch			2.7494PHT	3.7573/21RS	8.2733			

A10	CONDENSER	A20	CONTACT SET	A40	DISTRIBUTOR CAP	A50	ROTOR	A70	PICK-UP
C10	COIL	C20	IGNITION MODULE	C30	ELECTRONIC IGNITION KIT	E01	IGNITION CABLE SET		

The present application list is a brief version. For the detailed information about the possibility of installation on a specific vehicle, please refer to our web-catalogue http://catalogo.facet.eu/

Vehicle	alim.	kW	Date	Engine	FUNCTIONS ON THE VEHICLE: A10	A20	A40	A50	A70	C10 - C30	C20	E01
1.0i 16v Turbo	Petrol	0	06/00->	**512**								
All engines										9.8120 C30		
1.6i	Petrol	0	10/96->	**540, 541**								
All engines	version Bosch						2.7494PHT	3.7573/21RS	8.2733			
1.8i	Petrol	0	10/96->	**542, 543**								
All engines	version Bosch						2.7494PHT	3.7573/21RS	8.2733			
2.0i	Petrol	0	08/95->	**528, 529, 546, 547**								
All engines	version Bosch						2.7494PHT					
Eng. 528, 529	version Bosch							3.7555RS	8.2660			
Eng. 546, 547	version Bosch							3.7573/21RS	8.2733			
2.0i 16V	Petrol	0	02/96->	**112**								
All engines										9.6068 C10		
POINTER												
2.0i	Petrol	0	11/93-12/96	**526, 527, 809**								
Eng. 526, 527	version Bosch						2.7494PHT	3.7555RS	8.2660			
Eng. 809	version Bosch							3.7573/21RS				
POLO												
1.4	Petrol	55	07/06->	**BKY**								
All engines	Qty: 4									9.6374 C10		
1.4 16V	Petrol	55	09/02->	**BBY**								
All engines	Qty: 4									9.6374 C10		
1.6	Petrol	74	02/02->	**BAH, CCRA**								
All engines										9.8120 C30		4.9723
2.0	Petrol	85	05/02->	**BBX**								
All engines										9.8120 C30		4.9585
SAVEIRO												
1.6i	Petrol	0	10/96->	**540, 541**								
All engines	version Bosch						2.7494PHT	3.7573/21RS	8.2733			
1.8i	Petrol	0	10/96->	**542, 543**								
All engines	version Bosch						2.7494PHT	3.7573/21RS	8.2733			
2.0i	Petrol	0	10/96->	**546, 547**								
All engines	version Bosch						2.7494PHT	3.7573/21RS	8.2733			

A10	CONDENSER	**A20**	CONTACT SET	**A40**	DISTRIBUTOR CAP	**A50**	ROTOR	**A70**	PICK-UP
C10	COIL	**C20**	IGNITION MODULE	**C30**	ELECTRONIC IGNITION KIT	**E01**	IGNITION CABLE SET		

The present application list is a brief version. For the detailed information about the possibility of installation on a specific vehicle, please refer to our web-catalogue http://catalogo.facet.eu/

Vehicle	alim.	kW	Date	Engine	FUNCTIONS ON THE VEHICLE							
					A10	A20	A40	A50	A70	C10 - C30	C20	E01
140												
				ENGINE								
1.8	Petrol	55	08/66-07/68	B 18 A								
Engine	Information											
All engines						1.2521						
				ENGINE								
1.8 S	Petrol	55	08/66-07/68	B 18 A								
Engine	Information											
All engines						1.2521						
				ENGINE								
1.8 S	Petrol	74	08/66-01/72	B 18 B								
Engine	Information											
All engines						1.2547						
240												
				ENGINE								
1.8	Petrol	66	11/78-07/85	B 17 A								
Engine	Information											
All engines	version Bosch					1.2534HDVS	2.7479PHT	3.7525RS				
				ENGINE								
2.0	Petrol	100	10/82-08/84	B 19 ET								
Engine	Information											
All engines	version Bosch						2.7479PHT	3.7525RS	8.2653			
				ENGINE								
2.0	Petrol	60	08/74-07/76	0JX4G20A6L								
Engine	Information											
All engines	version Bosch					1.2549HDVS	2.7479PHT	3.7525RS				
				ENGINE								
2.0	Petrol	76	08/84-07/90	B 200 K								
Engine	Information											
All engines	version Bosch						2.7479PHT	3.7573/22RS				
				ENGINE								
2.0	Petrol	82	09/88-12/93	B 200 F								
Engine	Information											
All engines	version Bosch						2.7479PHT					
All engines	distr. num. 1367382, 1367468, version Bosch							3.7573/21RS				
All engines	distr. num. 1336690, 1346919, version Bosch							3.7573/22RS				
				ENGINE								
2.0	Petrol	86	08/83-07/93	B 200 E								
Engine	Information											
All engines	version Bosch						2.7479PHT	3.7573/22RS				
				ENGINE								
2.0	Petrol	89	09/84-12/93	B 200 E								
Engine	Information											
All engines	version Bosch						2.7479PHT	3.7573/22RS				
				ENGINE								
2.1 Turbo	Petrol	114	08/80-07/85	B 21 ET								
Engine	Information											
All engines	version Bosch						2.7479PHT	3.7525RS	8.2653			
				ENGINE								
2.1 Turbo	Petrol	121	08/80-07/85	B 21 FT								
Engine	Information											
All engines	version Bosch						2.7479PHT	3.7525RS	8.2653			
				ENGINE								
2.3	Petrol	81	08/84-07/86	B 230 A								
Engine	Information											
All engines	version Bosch						2.7479PHT	3.7573/22RS				
				ENGINE								
2.3	Petrol	82	08/80-07/84	B 23 A								
Engine	Information											
All engines								3.7567RS				

A10	CONDENSER	A20	CONTACT SET	A40	DISTRIBUTOR CAP	A50	ROTOR	A70	PICK-UP
C10	COIL	C20	IGNITION MODULE	C30	ELECTRONIC IGNITION KIT	E01	IGNITION CABLE SET		

The present application list is a brief version. For the detailed information about the possibility of installation on a specific vehicle, please refer to our web-catalogue http://catalogo.facet.eu/

Vehicle	alim.	kW	Date	Engine	FUNCTIONS ON THE VEHICLE A10	A20	A40	A50	A70	C10 - C30	C20	E01
2.3	Petrol	83	08/86-07/87	B 230 F								

Engine	Information	A10	A20	A40	A50	A70	C10 - C30	C20	E01
All engines	version Bosch			2.7479PHT					
All engines	distr. num. 1332587, version Bosch				3.7555RS				
All engines	distr. num. 1367382, version Bosch				3.7573/21RS				

Vehicle	alim.	kW	Date	Engine
2.3	Petrol	85	08/86-07/93	B 230 FD, B 230 K

Engine	Information	A10	A20	A40	A50	A70	C10 - C30	C20	E01
All engines	version Bosch			2.7479PHT					
All engines	distr. num. 1367382, 1367468, version Bosch				3.7573/21RS				
Eng. B 230 FD	distr. num. 1336690, 1346919, version Bosch				3.7573/22RS				

Vehicle	alim.	kW	Date	Engine
2.3	Petrol	96	08/83-07/92	B 230 E

Engine	Information	A10	A20	A40	A50	A70	C10 - C30	C20	E01
All engines	version Bosch			2.7479PHT	3.7573/22RS				

Vehicle	alim.	kW	Date	Engine
2.3 Cat	Petrol	100	08/91-07/92	B 230 F

Engine	Information	A10	A20	A40	A50	A70	C10 - C30	C20	E01
All engines	version Bosch			2.7479PHT					
All engines	distr. num. 1367382, 1367468, version Bosch				3.7573/21RS				
All engines	distr. num. 1336690, 1346919, version Bosch				3.7573/22RS				

Vehicle	alim.	kW	Date	Engine
2.3 i Cat	Petrol	85	08/86-07/93	B 230 F

Engine	Information	A10	A20	A40	A50	A70	C10 - C30	C20	E01
All engines	version Bosch			2.7479PHT					
All engines	distr. num. 1332587, version Bosch				3.7555RS				
All engines	distr. num. 1367382, 1367468, version Bosch				3.7573/21RS				

Vehicle	alim.	kW	Date	Engine
2.8	Petrol	114	10/80-09/84	B 28 E

Engine	Information	A10	A20	A40	A50	A70	C10 - C30	C20	E01
All engines	version Bosch				3.7523RS				

260

Vehicle	alim.	kW	Date	Engine
2.8	Petrol	114	08/80-07/85	B 28 E

Engine	Information	A10	A20	A40	A50	A70	C10 - C30	C20	E01
All engines	version Bosch				3.7523RS				

340-360

Vehicle	alim.	kW	Date	Engine
1.3	Petrol	49	01/89-12/90	B 13

Engine	Information	A10	A20	A40	A50	A70	C10 - C30	C20	E01
All engines	version Ducellier			2.7659PHT	3.7696RS				
All engines							9.6007 C10		4.9332

Vehicle	alim.	kW	Date	Engine
1.4	Petrol	46	08/82-08/85	B 14.3 E

Engine	Information	A10	A20	A40	A50	A70	C10 - C30	C20	E01
All engines	version Ducellier			2.7659PHT	3.7696RS				
All engines					3.7593RS		9.6007 C10		4.9332

Vehicle	alim.	kW	Date	Engine
1.4	Petrol	50	08/86-12/88	B 14.4 S

Engine	Information	A10	A20	A40	A50	A70	C10 - C30	C20	E01
All engines	version Ducellier			2.7659PHT	3.7696RS				
All engines					3.7593RS		9.6007 C10		4.9332

Vehicle	alim.	kW	Date	Engine
1.4	Petrol	51	08/87-07/88	B 14.4 S

Engine	Information	A10	A20	A40	A50	A70	C10 - C30	C20	E01
All engines	version Ducellier			2.7659PHT	3.7696RS				
All engines					3.7593RS		9.6007 C10		4.9332

Vehicle	alim.	kW	Date	Engine
1.4	Petrol	52	08/83-07/86	B 14.4 S

Engine	Information	A10	A20	A40	A50	A70	C10 - C30	C20	E01
All engines	version Ducellier			2.7659PHT	3.7696RS				

A10	CONDENSER	A20	CONTACT SET	A40	DISTRIBUTOR CAP	A50	ROTOR	A70	PICK-UP
C10	COIL	C20	IGNITION MODULE	C30	ELECTRONIC IGNITION KIT	E01	IGNITION CABLE SET		

The present application list is a brief version. For the detailed information about the possibility of installation on a specific vehicle, please refer to our web-catalogue http://catalogo.facet.eu/

Vehicle	alim.	kW	Date	Engine	FUNCTIONS ON THE VEHICLE A10	A20	A40	A50	A70	C10 - C30	C20	E01
1.4	Petrol	52	08/83-07/86	B 14.4 S						9.6007 C10		4.9332
1.4	Petrol	53	08/83-07/86	B 14.4 S								
1.7	Petrol	59	08/85-07/91	B 17 2 K								
2.0	Petrol	75	08/84-07/90	B 200 K								
2.0	Petrol	77	08/84-07/87	B 200 K								
2.0	Petrol	80	08/88-07/89	B 200 F								
2.0	Petrol	81	08/87-07/88	B 200 EA, B 200 F								
2.0	Petrol	82	08/86-07/88	B 200 E, B 200 EA, B 200 F								
2.0	Petrol	85	08/84-07/86	B 200 E								
2.0	Petrol	87	08/84-07/86	B 200 E								

Engine	Information	A10	A20	A40	A50	A70	C10 - C30	C20	E01
All engines							9.6007 C10		4.9332
All engines	version Ducellier			2.7659PHT	3.7696RS				
All engines							9.6007 C10		4.9332
All engines				2.7662PHT			9.6007 C10		
All engines	version Ducellier			2.7663PHT	3.7697				
All engines	version Bosch			2.7479PHT					
All engines	MODEL FROM: 1987, version Bosch				3.7573/21RS				
All engines	MODEL TO: 1986, version Bosch				3.7573/22RS				
All engines							9.6007 C10		
All engines	version Bosch			2.7479PHT					
All engines	MODEL FROM: 1987, version Bosch				3.7573/21RS				
All engines	MODEL TO: 1986, version Bosch				3.7573/22RS				
All engines							9.6007 C10		
All engines	version Bosch			2.7479PHT					
All engines	MODEL FROM: 1987, version Bosch				3.7573/21RS				
All engines	MODEL TO: 1986, version Bosch				3.7573/22RS				
All engines							9.6007 C10		
All engines	version Bosch			2.7479PHT					
All engines	MODEL FROM: 1987, version Bosch				3.7573/21RS				
All engines	MODEL TO: 1986, version Bosch				3.7573/22RS				
All engines							9.6007 C10		
All engines	version Bosch			2.7479PHT					
All engines	MODEL FROM: 1987, version Bosch				3.7573/21RS				
All engines	MODEL TO: 1986, version Bosch				3.7573/22RS				
All engines							9.6007 C10		
All engines	version Bosch			2.7479PHT					
All engines	MODEL FROM: 1987, version Bosch				3.7573/21RS				
All engines	version Bosch			2.7479PHT					
All engines	MODEL FROM: 1987, version Bosch				3.7573/21RS				

A10	CONDENSER	A20	CONTACT SET	A40	DISTRIBUTOR CAP	A50	ROTOR	A70	PICK-UP
C10	COIL	C20	IGNITION MODULE	C30	ELECTRONIC IGNITION KIT	E01	IGNITION CABLE SET		

The present application list is a brief version. For the detailed information about the possibility of installation on a specific vehicle, please refer to our web-catalogue http://catalogo.facet.eu/

VOLVO

Vehicle	alim.	kW	Date	Engine	FUNCTIONS ON THE VEHICLE							
					A10	A20	A40	A50	A70	C10 - C30	C20	E01
2.0	Petrol	87	08/84-07/86	ENGINE B 200 E								
Engine: All engines	Information: MODEL TO: 1986, version Bosch							3.7573/22RS				
Engine: All engines										9.6007 C10		
440												
1.6	Petrol	61	09/88-12/96	ENGINE B 16 F								
Engine: All engines	Information: version Ducellier						2.7669PHT	3.7697				
Engine: All engines	Information: Kit, version Ducellier						2.7671PHT					
Engine: All engines										9.6007 C10		4.8415
1.7	Petrol	58	09/88-08/92	ENGINE B 18 KD								
Engine: All engines	Information: version Ducellier						2.7669PHT	3.7697				
Engine: All engines	Information: Kit, version Ducellier						2.7671PHT					
Engine: All engines										9.6007 C10		4.8415
1.7	Petrol	60	09/88-08/89	ENGINE B 18 K								
Engine: All engines	Information: version Ducellier						2.7669PHT	3.7697				
Engine: All engines	Information: Kit, version Ducellier						2.7671PHT					
Engine: All engines										9.6007 C10		4.8415
1.7	Petrol	64	09/88-12/96	ENGINE B 18 KP								
Engine: All engines	Information: version Ducellier						2.7669PHT	3.7697				
Engine: All engines	Information: Kit, version Ducellier						2.7671PHT					
Engine: All engines										9.6007 C10		4.8415
1.7	Petrol	70	08/88-07/89	ENGINE B 18 F								
Engine: All engines	Information: version Ducellier						2.7669PHT	3.7697				
Engine: All engines	Information: Kit, version Ducellier						2.7671PHT					
Engine: All engines										9.6007 C10		4.8415
1.7	Petrol	75	08/89-12/96	ENGINE B 18 FP								
Engine: All engines	Information: version Ducellier						2.7669PHT	3.7697				
Engine: All engines	Information: Kit, version Ducellier						2.7671PHT					
Engine: All engines										9.6007 C10		4.8415
1.7	Petrol	78	09/88-12/96	ENGINE B 18 EP								
Engine: All engines	Information: version Ducellier						2.7669PHT	3.7697				
Engine: All engines	Information: Kit, version Ducellier						2.7671PHT					
Engine: All engines										9.6007 C10		4.8415
1.7	Petrol	80	08/88-07/89	ENGINE B 18 E								
Engine: All engines	Information: version Ducellier						2.7669PHT	3.7697				
Engine: All engines	Information: Kit, version Ducellier						2.7671PHT					
Engine: All engines										9.6007 C10		4.8415
1.7 Turbo	Petrol	88	08/88-07/96	ENGINE B 18 FT								
Engine: All engines	Information: version Ducellier						2.7669PHT	3.7697				
Engine: All engines	Information: Kit, version Ducellier						2.7671PHT					
Engine: All engines												4.8417

A10	CONDENSER	A20	CONTACT SET	A40	DISTRIBUTOR CAP	A50	ROTOR	A70	PICK-UP
C10	COIL	C20	IGNITION MODULE	C30	ELECTRONIC IGNITION KIT	E01	IGNITION CABLE SET		

The present application list is a brief version. For the detailed information about the possibility of installation on a specific vehicle, please refer to our web-catalogue http://catalogo.facet.eu/

Vehicle	alim.	kW	Date	Engine	FUNCTIONS ON THE VEHICLE							
					A10	A20	A40	A50	A70	C10 - C30	C20	E01
1.7 Turbo	Petrol	90	01/91-12/96	**B 18 FT**								
All engines	version Ducellier						2.7669PHT	3.7697				
All engines	Kit, version Ducellier						2.7671PHT					
All engines												4.8417
1.8	Petrol	66	08/91-12/96	**B 18 U**								
All engines	version Ducellier						2.7669PHT	3.7697				
All engines	Kit, version Ducellier						2.7671PHT					
All engines										9.6007 C10		4.8415
2.0	Petrol	80	08/93-07/96	**B 20 F**								
All engines	version Ducellier						2.7669PHT	3.7697				
All engines	Kit, version Ducellier						2.7671PHT					
All engines										9.6007 C10		4.8415
2.0	Petrol	81	08/92-07/95	**B 20 F**								
All engines	version Ducellier						2.7669PHT	3.7697				
All engines	Kit, version Ducellier						2.7671PHT					
All engines										9.6007 C10		4.8415
460												
1.6	Petrol	61	07/92-07/96	**B 16 F**								
All engines	version Ducellier						2.7669PHT	3.7697				
All engines	Kit, version Ducellier						2.7671PHT					
All engines										9.6007 C10		4.8415
1.7	Petrol	58	08/89-07/92	**B 18 K, B 18 KD**								
All engines	version Ducellier						2.7669PHT	3.7697				
All engines	Kit, version Ducellier						2.7671PHT					
All engines										9.6007 C10		4.8415
1.7	Petrol	64	09/88-07/96	**B 18 KP**								
All engines	version Ducellier						2.7669PHT	3.7697				
All engines	Kit, version Ducellier						2.7671PHT					
All engines										9.6007 C10		4.8415
1.7	Petrol	66	09/90-07/96	**B 18 KP**								
All engines	version Ducellier						2.7669PHT	3.7697				
All engines	Kit, version Ducellier						2.7671PHT					
All engines										9.6007 C10		4.8415
1.7	Petrol	75	08/89-07/95	**B 18 EP, B 18 FP**								
All engines	version Ducellier						2.7669PHT	3.7697				
All engines	Kit, version Ducellier						2.7671PHT					
All engines										9.6007 C10		4.8415
1.7 Turbo	Petrol	88	08/89-07/96	**B 18 FT**								
All engines	version Ducellier						2.7669PHT	3.7697				
All engines	Kit, version Ducellier						2.7671PHT					
All engines												4.8417

A10	CONDENSER	**A20**	CONTACT SET	**A40**	DISTRIBUTOR CAP	**A50**	ROTOR	**A70**	PICK-UP
C10	COIL	**C20**	IGNITION MODULE	**C30**	ELECTRONIC IGNITION KIT	**E01**	IGNITION CABLE SET		

The present application list is a brief version. For the detailed information about the possibility of installation on a specific vehicle, please refer to our web-catalogue http://catalogo.facet.eu/

VOLVO

Vehicle	alim.	kW	Date	Engine	FUNCTIONS ON THE VEHICLE A10	A20	A40	A50	A70	C10 - C30	C20	E01
1.7 Turbo	Petrol	90	01/91-07/96	ENGINE B 18 FT								
Engine	Information	A10	A20	A40	A50	A70	C10 - C30		C20	E01		
All engines	version Ducellier			2.7669PHT	3.7697							
All engines	Kit, version Ducellier			2.7671PHT								
All engines										4.8417		
1.8	Petrol	66	08/91-07/96	ENGINE B 18 U								
Engine	Information	A10	A20	A40	A50	A70	C10 - C30		C20	E01		
All engines	version Ducellier			2.7669PHT	3.7697							
All engines	Kit, version Ducellier			2.7671PHT								
All engines							9.6007	C10		4.8415		
2.0	Petrol	80	08/93-07/96	ENGINE B 20 F								
Engine	Information	A10	A20	A40	A50	A70	C10 - C30		C20	E01		
All engines	version Ducellier			2.7669PHT	3.7697							
All engines	Kit, version Ducellier			2.7671PHT								
All engines							9.6007	C10		4.8415		
2.0	Petrol	81	08/92-07/95	ENGINE B 20 F								
Engine	Information	A10	A20	A40	A50	A70	C10 - C30		C20	E01		
All engines	version Ducellier			2.7669PHT	3.7697							
All engines	Kit, version Ducellier			2.7671PHT								
All engines							9.6007	C10		4.8415		
480												
1.7	Petrol	70	08/87-07/89	ENGINE B 18 F								
Engine	Information	A10	A20	A40	A50	A70	C10 - C30		C20	E01		
All engines	version Ducellier			2.7669PHT	3.7697							
All engines	Kit, version Ducellier			2.7671PHT								
All engines							9.6007	C10		4.8415		
1.7	Petrol	75	08/89-07/96	ENGINE B 18 EP, B 18 FP								
Engine	Information	A10	A20	A40	A50	A70	C10 - C30		C20	E01		
All engines	version Ducellier			2.7669PHT	3.7697							
All engines	Kit, version Ducellier			2.7671PHT								
All engines							9.6007	C10		4.8415		
1.7	Petrol	78	04/86-09/95	ENGINE B 18 E, B 18 EP								
Engine	Information	A10	A20	A40	A50	A70	C10 - C30		C20	E01		
All engines	version Ducellier			2.7669PHT	3.7697							
All engines	Kit, version Ducellier			2.7671PHT								
All engines							9.6007	C10		4.8415		
1.7	Petrol	80	08/86-07/88	ENGINE B 18 E								
Engine	Information	A10	A20	A40	A50	A70	C10 - C30		C20	E01		
All engines	version Ducellier			2.7669PHT	3.7697							
All engines	Kit, version Ducellier			2.7671PHT								
All engines							9.6007	C10		4.8415		
1.7 Turbo	Petrol	88	08/87-07/96	ENGINE B 18 FT								
Engine	Information	A10	A20	A40	A50	A70	C10 - C30		C20	E01		
All engines	version Ducellier			2.7669PHT	3.7697							
All engines	Kit, version Ducellier			2.7671PHT								
All engines										4.8417		
1.7 Turbo	Petrol	90	01/91-07/96	ENGINE B 18 FT								
Engine	Information	A10	A20	A40	A50	A70	C10 - C30		C20	E01		
All engines	version Ducellier			2.7669PHT	3.7697							
All engines	Kit, version Ducellier			2.7671PHT								
All engines										4.8417		

A10	CONDENSER	A20	CONTACT SET	A40	DISTRIBUTOR CAP	A50	ROTOR	A70	PICK-UP
C10	COIL	C20	IGNITION MODULE	C30	ELECTRONIC IGNITION KIT	E01	IGNITION CABLE SET		

The present application list is a brief version. For the detailed information about the possibility of installation on a specific vehicle, please refer to our web-catalogue http://catalogo.facet.eu/

Vehicle	alim.	kW	Date	Engine	FUNCTIONS ON THE VEHICLE							
					A10	A20	A40	A50	A70	C10 - C30	C20	E01
2.0	Petrol	**81**	08/92-09/95	**B 20 F**			2.7669PHT	3.7697				
All engines				version Ducellier								
All engines				Kit, version Ducellier			2.7671PHT					
All engines										9.6007 C10		4.8415
740												
2.0	Petrol	**118**	01/86-08/90	**B 200 ET**			2.7527PHT	3.7573/18RS				
All engines				version Bosch								
All engines												4.8372
2.0	Petrol	**120**	01/85-12/85	**B 200 ET**			2.7527PHT	3.7573/18RS				
All engines				version Bosch								
All engines												4.8372
2.0	Petrol	**76**	09/88-08/90	**B 200 K**			2.7527PHT	3.7573/18RS	8.2722			
All engines				version Bosch								
2.0	Petrol	**86**	01/87-08/88	**B 200 E**			2.7527PHT	3.7573/18RS	8.2722			
All engines				version Bosch								
All engines												4.8372
2.0	Petrol	**89**	08/85-07/92	**B 200 G**			2.7527PHT	3.7573/18RS	8.2722			
All engines				version Bosch								
All engines												4.8372
2.0 16V	Petrol	**100**	09/87-08/90	**B 204 E**			2.7527PHT	3.7573/18RS				
All engines				version Bosch								
2.0 16V Turbo	Petrol	**136**	08/89-07/90	**B 204 GT**			2.7527PHT	3.7573/18RS				
All engines				version Bosch								
2.0 16V Turbo	Petrol	**140**	08/89-07/90	**B 204 FT**			2.7527PHT	3.7573/18RS				
All engines				version Bosch								
2.0 GLE	Petrol	**103**	09/87-08/90	**B 204 E**			2.7527PHT	3.7573/18RS				
All engines				version Bosch								
2.0 Turbo	Petrol	**114**	09/90-08/91	**B 200 FT**			2.7527PHT	3.7573/18RS				
All engines				version Bosch								
All engines												4.8372
2.0 Turbo	Petrol	**115**	09/87-08/90	**B 200 ET**			2.7527PHT	3.7573/18RS				
All engines				version Bosch								
All engines												4.8372
2.3	Petrol	**111**	08/88-08/92	**B 234 F**			2.7527PHT	3.7573/18RS				
All engines				version Bosch								

A10	CONDENSER	**A20**	CONTACT SET	**A40**	DISTRIBUTOR CAP	**A50**	ROTOR	**A70**	PICK-UP
C10	COIL	**C20**	IGNITION MODULE	**C30**	ELECTRONIC IGNITION KIT	**E01**	IGNITION CABLE SET		

The present application list is a brief version. For the detailed information about the possibility of installation on a specific vehicle, please refer to our web-catalogue http://catalogo.facet.eu/

Vehicle	alim.	kW	Date	Engine	FUNCTIONS ON THE VEHICLE							
					A10	A20	A40	A50	A70	C10 - C30	C20	E01
2.3	Petrol	114	08/88-07/91	**B 234 F**								
Engine	Information											
All engines	version Bosch						2.7527PHT	3.7573/18RS				
2.3	Petrol	117	08/87-07/89	**B 234 F**								
Engine	Information											
All engines	version Bosch						2.7527PHT	3.7573/18RS				
2.3	Petrol	82	08/84-07/86	**B 230 A**								
Engine	Information											
All engines	version Bosch						2.7479PHT	3.7573/22RS				
2.3	Petrol	83	08/85-12/89	**B 230 F**								
Engine	Information											
All engines	version Bosch						2.7527PHT	3.7573/18RS				
All engines	distr. num. 1336087, version Bosch								8.2722			
All engines												4.8372
2.3	Petrol	84	08/84-07/90	**B 230 F, B 230 K**								
Engine	Information											
All engines	version Bosch						2.7527PHT	3.7573/18RS				
All engines	distr. num. 1336087, version Bosch								8.2722			
All engines												4.8372
2.3	Petrol	85	08/87-07/92	**B 230 F**								
Engine	Information											
All engines	version Bosch						2.7527PHT	3.7573/18RS				
All engines	distr. num. 1336087, version Bosch								8.2722			
All engines												4.8372
2.3	Petrol	86	08/84-07/90	**B 230 K**								
Engine	Information											
All engines	version Bosch						2.7527PHT	3.7573/18RS	8.2722			
All engines												4.8372
2.3	Petrol	94	08/91-07/92	**B 230 G**								
Engine	Information											
All engines	version Bosch						2.7527PHT	3.7573/18RS				
All engines												4.8372
2.3	Petrol	96	08/84-12/92	**B 230 E, B 230 FB**								
Engine	Information											
All engines	version Bosch						2.7527PHT	3.7573/18RS				
Eng. B 230 E	version Bosch								8.2722			
All engines												4.8372
2.3 GL	Petrol	89	08/84-08/87	**B 230 E**								
Engine	Information											
All engines	version Bosch						2.7527PHT	3.7573/18RS	8.2722			
All engines												4.8372
2.3 Turbo	Petrol	115	08/86-07/89	**B 230 FT**								
Engine	Information											
All engines	version Bosch						2.7527PHT	3.7573/18RS				
All engines	distr. num. 1336087, version Bosch								8.2722			
All engines												4.8372
2.3 Turbo	Petrol	121	08/89-07/90	**B 230 FT, B 230 GT**								
Engine	Information											
All engines	version Bosch						2.7527PHT	3.7573/18RS				

A10	CONDENSER	**A20**	CONTACT SET	**A40**	DISTRIBUTOR CAP	**A50**	ROTOR	**A70**	PICK-UP
C10	COIL	**C20**	IGNITION MODULE	**C30**	ELECTRONIC IGNITION KIT	**E01**	IGNITION CABLE SET		

The present application list is a brief version. For the detailed information about the possibility of installation on a specific vehicle, please refer to our web-catalogue http://catalogo.facet.eu/

Vehicle	alim.	kW	Date	Engine	FUNCTIONS ON THE VEHICLE							
					A10	A20	A40	A50	A70	C10 - C30	C20	E01
2.3 Turbo	Petrol	121	08/89-07/90	**B 230 FT, B 230 GT**								
Eng. B 230 FT	distr. num. 1336087, version Bosch								8.2722			
All engines												4.8372
2.3 Turbo	Petrol	125	09/89-08/91	**B 230 FT, B 230 GT**								
All engines	version Bosch						2.7527PHT	3.7573/18RS				
Eng. B 230 FT	distr. num. 1336087, version Bosch								8.2722			
All engines												4.8372
2.3 Turbo	Petrol	134	08/85-12/88	**B 230 ET**								
All engines	version Bosch						2.7527PHT	3.7573/18RS				
All engines												4.8372
2.3 Turbo	Petrol	140	08/89-07/90	**B 230 FT**								
All engines	version Bosch						2.7527PHT	3.7573/18RS				
All engines	distr. num. 1336087, version Bosch								8.2722			
All engines												4.8372
760												
2.3	Petrol	121	01/88-07/92	**B 230 FT**								
All engines	version Bosch						2.7527PHT	3.7573/18RS				
All engines	distr. num. 1336087, version Bosch								8.2722			
All engines												4.8372
2.3	Petrol	130	08/84-08/87	**B 230 ET**								
All engines	version Bosch						2.7527PHT	3.7573/18RS				
All engines												4.8372
2.3	Petrol	84	08/84-08/87	**B 230 K**								
All engines	version Bosch						2.7527PHT	3.7573/18RS	8.2722			
All engines												4.8372
2.3 Turbo	Petrol	115	08/84-08/90	**B 230 FT**								
All engines	version Bosch						2.7527PHT	3.7573/18RS				
All engines	distr. num. 1336087, version Bosch								8.2722			
All engines												4.8372
2.3 Turbo	Petrol	119	08/83-07/84	**B 23 FT**								
All engines	version Bosch						2.7479PHT	3.7555RS				
2.3 Turbo	Petrol	121	08/89-07/90	**B 230 GT**								
All engines	version Bosch						2.7527PHT	3.7573/18RS				
All engines												4.8372
2.3 Turbo	Petrol	127	08/82-07/84	**B 23 ET**								
All engines	version Bosch						2.7479PHT	3.7555RS				
2.3 Turbo	Petrol	134	08/84-08/90	**B 230 ET**								
All engines	version Bosch						2.7527PHT	3.7573/18RS				

A10	CONDENSER	**A20**	CONTACT SET	**A40**	DISTRIBUTOR CAP	**A50**	ROTOR	**A70**	PICK-UP
C10	COIL	**C20**	IGNITION MODULE	**C30**	ELECTRONIC IGNITION KIT	**E01**	IGNITION CABLE SET		

The present application list is a brief version. For the detailed information about the possibility of installation on a specific vehicle, please refer to our web-catalogue http://catalogo.facet.eu/

Vehicle	alim.	kW	Date	Engine	FUNCTIONS ON THE VEHICLE: A10	A20	A40	A50	A70	C10 - C30	C20	E01
2.3 Turbo	Petrol	134	08/84-08/90	**B 230 ET**								
Engine: All engines — Information:												4.8372
2.8	Petrol	105	05/86-08/91	**B 280 F**								
Engine: All engines — Information: version Bosch							2.7530/6PHT	3.7573/19RS				
2.8	Petrol	108	08/86-07/90	**B 280 F**								
Engine: All engines — Information: version Bosch							2.7530/6PHT	3.7573/19RS				
2.8	Petrol	112	09/86-10/88	**B 280 E**								
Engine: All engines — Information: version Bosch							2.7530/6PHT	3.7573/19RS				
2.8	Petrol	114	08/82-04/86	**B 28 F**								
Engine: All engines — Information: version Bosch								3.7523RS				
2.8	Petrol	115	08/81-08/90	**B 28 E, B 280 E**								
Engine: Eng. B 280 E — Information: version Bosch							2.7530/6PHT	3.7573/19RS				
Engine: Eng. B 28 E — Information: version Bosch								3.7523RS				
2.8	Petrol	125	08/84-08/90	**B 280 E**								
Engine: All engines — Information: version Bosch							2.7530/6PHT	3.7573/19RS				
2.8	Petrol	95	01/82-12/87	**B 28 A**								
Engine: All engines — Information: version Bosch								3.7523RS				
780												
2.0i	Petrol	0	01/87-12/90	**B 204 GT**								
Engine: All engines — Information: version Bosch							2.7527PHT	3.7573/18RS				
2.0i Turbo	Petrol	0	01/87-12/90	**B 200 ET**								
Engine: All engines — Information: version Bosch							2.7527PHT	3.7573/18RS				
2.9	Petrol	108	08/87-07/90	**B 280 F**								
Engine: All engines — Information: version Bosch							2.7530/6PHT	3.7573/19RS				
2.9	Petrol	115	08/86-07/87	**B 280 E**								
Engine: All engines — Information: version Bosch							2.7530/6PHT	3.7573/19RS				
850												
2.0	Petrol	105	06/91-12/96	**B 5204 F**								
Engine: All engines — Information: version Bosch							2.7530/30PHT	3.7573/47RS				
Engine: All engines — Information: MODEL FROM: 1996										9.8123 C30		
Engine: All engines — Information:												4.7064
2.0	Petrol	93	08/94-12/96	**B 5202 S**								
Engine: All engines — Information: version Bosch							2.7530/30PHT	3.7573/47RS				

A10	CONDENSER	**A20**	CONTACT SET	**A40**	DISTRIBUTOR CAP	**A50**	ROTOR	**A70**	PICK-UP
C10	COIL	**C20**	IGNITION MODULE	**C30**	ELECTRONIC IGNITION KIT	**E01**	IGNITION CABLE SET		

The present application list is a brief version. For the detailed information about the possibility of installation on a specific vehicle, please refer to our web-catalogue http://catalogo.facet.eu/

Vehicle	alim.	kW	Date	Engine	FUNCTIONS ON THE VEHICLE							
					A10	A20	A40	A50	A70	C10 - C30	C20	E01
2.0	Petrol	93	08/94-12/96	ENGINE B 5202 S								
All engines	MODEL FROM: 1996									9.8123 C30		
All engines												4.7064
2.0 Turbo	Petrol	132	09/93-10/97	ENGINE B 5204 T2								
All engines	version Bosch						2.7530/30PHT	3.7573/47RS				
All engines										9.8123 C30		4.7064
2.0 Turbo	Petrol	155	02/93-12/96	ENGINE B 5204 FT, B 5204 T								
All engines	version Bosch						2.7530/30PHT	3.7573/47RS				
All engines	MODEL FROM: 1996									9.8123 C30		
All engines												4.7064
2.3	Petrol	106	01/96-10/96	ENGINE B 5234 FS								
All engines	version Bosch						2.7530/30PHT	3.7573/47RS				
All engines	MODEL FROM: 1996									9.8123 C30		
All engines												4.7064
2.3 T5	Petrol	166	02/93-12/96	ENGINE 9M9T 872								
All engines	version Bosch						2.7530/30PHT	3.7573/47RS				
All engines	MODEL FROM: 1996									9.8123 C30		
All engines												4.7064
2.3 T5-R	Petrol	184	08/95-12/96	ENGINE B 5234 T4								
All engines	version Bosch						2.7530/30PHT	3.7573/47RS				
All engines										9.8123 C30		4.7064
2.3 Turbo R	Petrol	177	06/95-10/97	ENGINE B 5234 T5								
All engines	version Bosch						2.7530/30PHT	3.7573/47RS				
All engines	MODEL FROM: 1996									9.8123 C30		
All engines												4.7064
2.4	Petrol	103	06/91-07/94	ENGINE B 5252								
All engines	version Bosch						2.7530/30PHT	3.7573/47RS				
All engines	MODEL FROM: 1996									9.8123 C30		
All engines												4.7064
2.4	Petrol	106	08/94-12/96	ENGINE B 5252 FS								
All engines	version Bosch						2.7530/30PHT	3.7573/47RS				
All engines	MODEL FROM: 1996									9.8123 C30		
All engines												4.7064
2.4	Petrol	125	08/91-12/96	ENGINE B 5254 S								
All engines	version Bosch						2.7530/30PHT	3.7573/47RS				
All engines	MODEL FROM: 1996									9.8123 C30		
All engines												4.7064
2.4 AWD	Petrol	142	04/96-12/96	ENGINE B 5254 T								
All engines	version Bosch						2.7530/30PHT	3.7573/47RS				
All engines										9.8123 C30		4.7064

A10	CONDENSER	A20	CONTACT SET	A40	DISTRIBUTOR CAP	A50	ROTOR	A70	PICK-UP
C10	COIL	C20	IGNITION MODULE	C30	ELECTRONIC IGNITION KIT	E01	IGNITION CABLE SET		

The present application list is a brief version. For the detailed information about the possibility of installation on a specific vehicle, please refer to our web-catalogue http://catalogo.facet.eu/

Vehicle	alim.	kW	Date	Engine	FUNCTIONS ON THE VEHICLE							
					A10	A20	A40	A50	A70	C10 - C30	C20	E01
2.4 GLE	Petrol	142	09/93-10/97	**B 5254 T**								
Engine	Information						2.7530/30PHT	3.7573/47RS				
All engines	version Bosch									9.8123 C30		4.7064
All engines												
2.5 10V	Petrol	103	06/91-07/94	**B 5252 FS**								
Engine	Information						2.7530/30PHT	3.7573/47RS				
All engines	version Bosch									9.8123 C30		
All engines	MODEL FROM: 1996											4.7064
All engines												
2.5 10V	Petrol	106	08/94-12/97	**B 5252 FS**								
Engine	Information						2.7530/30PHT	3.7573/47RS				
All engines	version Bosch									9.8123 C30		
All engines	MODEL FROM: 1996											4.7064
All engines												
940 I												
2.0	Petrol	82	01/92-07/94	**B 200 F**								
Engine	Information						2.7527PHT	3.7573/18RS				
All engines	version Bosch											4.8372
All engines												
2.0	Petrol	88	08/90-07/91	**B 200 E**								
Engine	Information						2.7527PHT	3.7573/18RS				
All engines	version Bosch											4.8372
All engines												
2.0	Petrol	89	09/90-09/93	**B 200 E, B 200 G**								
Engine	Information						2.7527PHT	3.7573/18RS				
All engines	version Bosch								8.2722			4.8372
Eng. B 200 E	version Bosch											
All engines												
2.0 GL	Petrol	103	09/90-04/92	**B 204 E**								
Engine	Information						2.7527PHT	3.7573/18RS				
All engines	version Bosch											
2.0 Turbo	Petrol	114	08/90-07/95	**B 200 FT**								
Engine	Information						2.7527PHT	3.7573/18RS				
All engines	version Bosch											4.8372
All engines												
2.3	Petrol	114	08/90-07/91	**B 234 F, B 234 G**								
Engine	Information						2.7527PHT	3.7573/18RS				
All engines	version Bosch											
2.3	Petrol	84	08/91-07/94	**B 230 F**								
Engine	Information						2.7527PHT	3.7573/18RS				
All engines	version Bosch											4.8372
All engines												
2.3	Petrol	85	08/92-07/94	**B 230 FD**								
Engine	Information						2.7527PHT	3.7573/18RS				
All engines	version Bosch											4.8372
All engines												
2.3	Petrol	90	08/90-12/94	**B 230 E**								
Engine	Information						2.7527PHT	3.7573/18RS	8.2722			
All engines	version Bosch											4.8372
All engines												

A10	CONDENSER	**A20**	CONTACT SET	**A40**	DISTRIBUTOR CAP	**A50**	ROTOR	**A70**	PICK-UP
C10	COIL	**C20**	IGNITION MODULE	**C30**	ELECTRONIC IGNITION KIT	**E01**	IGNITION CABLE SET		

The present application list is a brief version. For the detailed information about the possibility of installation on a specific vehicle, please refer to our web-catalogue http://catalogo.facet.eu/

Vehicle	alim.	kW	Date	Engine	FUNCTIONS ON THE VEHICLE							
					A10	A20	A40	A50	A70	C10 - C30	C20	E01
2.3	Petrol	96	08/90-07/95	B 230 E, B 230 FB, B 230 G								
All engines	version Bosch						2.7527PHT	3.7573/18RS				
Eng. B 230 E	version Bosch								8.2722			
All engines												4.8372
2.3 16V	Petrol	114	08/90-07/92	B 234 G								
All engines	version Bosch						2.7527PHT	3.7573/18RS				
2.3 Turbo	Petrol	121	08/90-07/94	B 230 FT, B 230 GT								
All engines	version Bosch						2.7527PHT	3.7573/18RS				
Eng. B 230 FT												4.8372
940 II												
2.0 GLT	Petrol	139	10/94-05/97	B 200 GT								
All engines	version Bosch						2.7527PHT	3.7573/18RS				
All engines												4.8372
2.0 Turbo	Petrol	114	04/96-10/98	B 200 FT								
All engines	version Bosch						2.7527PHT	3.7573/18RS				
All engines												4.8372
2.3	Petrol	113	10/94-05/97	B 230 GK								
All engines	version Bosch						2.7527PHT	3.7573/18RS				
All engines												4.8372
2.3	Petrol	85	08/94-07/95	B 230 FD								
All engines	version Bosch						2.7527PHT	3.7573/18RS				
All engines												4.8372
2.3 ti	Petrol	99	01/95-10/98	B 230 FK								
All engines	version Bosch						2.7527PHT	3.7573/18RS				
All engines												4.8372
2.3 Turbo	Petrol	104	01/95-10/98	B 230 GK								
All engines	version Bosch						2.7527PHT	3.7573/18RS				
All engines												4.8372
2.3 Turbo	Petrol	121	08/94-10/98	B 230 FT								
All engines	version Bosch						2.7527PHT	3.7573/18RS				
All engines												4.8372
2.3 Turbo	Petrol	126	01/95-12/98	B 230 FT								
All engines	version Bosch						2.7527PHT	3.7573/18RS				
All engines												4.8372
960 I												
2.0	Petrol	140	08/90-09/93	B 204 FT								
All engines	version Bosch						2.7527PHT	3.7573/18RS				

A10	CONDENSER	**A20**	CONTACT SET	**A40**	DISTRIBUTOR CAP	**A50**	ROTOR	**A70**	PICK-UP
C10	COIL	**C20**	IGNITION MODULE	**C30**	ELECTRONIC IGNITION KIT	**E01**	IGNITION CABLE SET		

The present application list is a brief version. For the detailed information about the possibility of installation on a specific vehicle, please refer to our web-catalogue http://catalogo.facet.eu/

Vehicle	alim.	kW	Date	Engine	FUNCTIONS ON THE VEHICLE: A10	A20	A40	A50	A70	C10 - C30	C20	E01
2.3	Petrol	121	08/90-07/94	B 230 GT								
Engine: All engines	Information: version Bosch						2.7527PHT	3.7573/18RS				
Engine: All engines	Information:											4.8372
2.3 Turbo	Petrol	121	09/90-08/93	B 230 FT								
Engine: All engines	Information: version Bosch						2.7527PHT	3.7573/18RS				
Engine: All engines	Information:											4.8372
2.8 GL	Petrol	108	09/90-05/92	B 280 F								
Engine: All engines	Information: version Bosch						2.7530/6PHT	3.7573/19RS				
2.8 GL	Petrol	115	09/90-05/92	B 280 E								
Engine: All engines	Information: version Bosch						2.7530/6PHT	3.7573/19RS				
C30												
1.6	Petrol	74	10/06-12/12	B 4164 S3								
Engine: All engines	Information: ->ch. 242342, ch. 242343 ->, x 1, D.I.S.									9.6381 C10		
Engine: All engines	Information:											4.7242
1.8	Petrol	92	10/06-12/12	B 4184 S11								
Engine: All engines	Information: x 4, COIL ON PLUG									9.6380 C10		
1.8 FlexFuel	Petrol/ Ethanol	92	01/07-12/12	B 4184 S8								
Engine: All engines	Information: x 4, COIL ON PLUG									9.6380 C10		
2.0	Petrol	107	10/06-12/12	B 4204 S3								
Engine: All engines	Information: x 4, COIL ON PLUG									9.6380 C10		
2.0 FlexFuel	Petrol/ Ethanol	107	01/10-12/12	B 4204 S4								
Engine: All engines	Information: x 4, COIL ON PLUG									9.6380 C10		
2.4 i	Petrol	125	10/06-12/12	B 5244 S4								
Engine: All engines	Information: x 5, COIL ON PLUG									9.6378 C10		
T5	Petrol	162	10/06-12/12	B 5254 T3								
Engine: All engines	Information: x 5, COIL ON PLUG									9.6378 C10		
T5	Petrol	169	03/07-12/12	B 5254 T7								
Engine: All engines	Information: x 5, COIL ON PLUG									9.6378 C10		
T5	Petrol	184	10/07-12/13	B 5254 T7								
Engine: All engines	Information: x 5, COIL ON PLUG									9.6378 C10		

A10	CONDENSER	A20	CONTACT SET	A40	DISTRIBUTOR CAP	A50	ROTOR	A70	PICK-UP
C10	COIL	C20	IGNITION MODULE	C30	ELECTRONIC IGNITION KIT	E01	IGNITION CABLE SET		

The present application list is a brief version. For the detailed information about the possibility of installation on a specific vehicle, please refer to our web-catalogue http://catalogo.facet.eu/

Vehicle	alim.	kW	Date	Engine	FUNCTIONS ON THE VEHICLE							
					A10	A20	A40	A50	A70	C10 - C30	C20	E01
C70 I												
2.0	Petrol	132	03/97-10/05	ENGINE B 5204 T2								
All engines				version Bosch			2.7530/30PHT	3.7573/47RS				
All engines										9.8123 C30		4.7064
2.0 T	Petrol	120	03/00-10/05	ENGINE B 5204 T4								
All engines				x 5, COIL ON PLUG, incl. spark plug connector						9.6348 C10		
2.0 T	Petrol	166	03/97-10/05	ENGINE B 5204 T3								
All engines				MODEL TO: 1998, version Bosch			2.7530/30PHT	3.7573/47RS				
All engines				x 5, COIL ON PLUG, incl. spark plug connector						9.6348 C10		
All engines				MODEL TO: 1998								4.7064
2.3 T5	Petrol	176	03/98-10/05	ENGINE B 5234 T3								
All engines				MODEL TO: 1998, version Bosch			2.7530/30PHT	3.7573/47RS				
All engines				x 5, COIL ON PLUG, incl. spark plug connector						9.6348 C10		
All engines				MODEL TO: 1998								4.7064
2.3 T5	Petrol	180	07/02-10/05	ENGINE B 5234 T9								
All engines				x 5, COIL ON PLUG, incl. spark plug connector						9.6348 C10		
2.3 T-5	Petrol	176	03/97-09/02	ENGINE B 5234 T3								
All engines				MODEL TO: 1998, version Bosch			2.7530/30PHT	3.7573/47RS				
All engines				x 5, COIL ON PLUG, incl. spark plug connector						9.6348 C10		
All engines				MODEL TO: 1998								4.7064
2.4	Petrol	103	03/99-07/00	ENGINE B 5244 S								
All engines				Qty: 5						9.6348 C10		
2.4	Petrol	121	03/99-09/02	ENGINE B 5254 S, B5254SDENS								
Eng. B 5254 S				Qty: 5						9.6348 C10		
Eng. B5254SDENS				x 5, COIL ON PLUG, incl. spark plug connector						9.6348 C10		
2.4	Petrol	125	06/98-10/05	ENGINE B 5244 S, B 5254 S								
Eng. B 5244 S				x 5, COIL ON PLUG, incl. spark plug connector						9.6348 C10		
Eng. B 5254 S				Qty: 5						9.6348 C10		
2.4 T	Petrol	142	03/97-10/05	ENGINE B 5244 T, B 5254 T								
Eng. B 5254 T				MODEL TO: 1998, version Bosch			2.7530/30PHT	3.7573/47RS				
All engines				x 5, COIL ON PLUG, incl. spark plug connector						9.6348 C10		
Eng. B 5254 T				MODEL FROM: 1999, Qty: 5						9.6348 C10		
Eng. B 5254 T				MODEL TO: 1998						9.8123 C30		4.7064
2.4 T	Petrol	147	07/02-10/05	ENGINE B 5244 T7								
All engines				x 5, COIL ON PLUG, incl. spark plug connector						9.6348 C10		
C70 II												
2.4	Petrol	103	03/06-10/09	ENGINE B 5244 S5								
All engines				x 5, COIL ON PLUG						9.6378 C10		

A10	CONDENSER	**A20**	CONTACT SET	**A40**	DISTRIBUTOR CAP	**A50**	ROTOR	**A70**	PICK-UP
C10	COIL	**C20**	IGNITION MODULE	**C30**	ELECTRONIC IGNITION KIT	**E01**	IGNITION CABLE SET		

The present application list is a brief version. For the detailed information about the possibility of installation on a specific vehicle, please refer to our web-catalogue http://catalogo.facet.eu/

Vehicle	alim.	kW	Date	Engine	FUNCTIONS ON THE VEHICLE							
					A10	A20	A40	A50	A70	C10 - C30	C20	E01
2.4 i	Petrol	125	03/06-10/09	B 5244 S4								
Engine: All engines	Information: x 5, COIL ON PLUG									9.6378 C10		
T5	Petrol	162	03/06-02/07	B 5254 T3								
Engine: All engines	Information: x 5, COIL ON PLUG									9.6378 C10		
T5	Petrol	169	03/07-06/13	B 5254 T3, B 5254 T7								
Engine: All engines	Information: x 5, COIL ON PLUG									9.6378 C10		
P 121												
1.6	Petrol	44	05/59-09/66	B 16 A								
Engine: All engines	Information: version BOSCH						2.7476PHT					
1.8	Petrol	50	05/59-09/66	B 18 A								
Engine: All engines	Information:					1.2521						
Engine: All engines	Information: version BOSCH						2.7476PHT					
1.8	Petrol	55	02/67-05/71	B 18								
Engine: All engines	Information:					1.2521						
Engine: All engines	Information: version BOSCH						2.7476PHT					
2.0	Petrol	60	11/68-05/71	0JX4G20A6L								
Engine: All engines	Information: version BOSCH						2.7476PHT					
P 122 S AMAZON												
1.6	Petrol	61	05/59-09/66	B 16								
Engine: All engines	Information: version BOSCH						2.7476PHT					
1.8	Petrol	59	05/59-07/67	B 18								
Engine: All engines	Information:					1.2521, 1.2547						
Engine: All engines	Information: version BOSCH						2.7476PHT					
1.8	Petrol	63	09/66-05/71	B 18								
Engine: All engines	Information:					1.2547						
Engine: All engines	Information: version BOSCH						2.7476PHT					
1.8	Petrol	66	02/67-05/71	B 18 D								
Engine: All engines	Information:					1.2547	2.7462					
Engine: All engines	Information: version BOSCH						2.7476PHT					
1.8	Petrol	76	09/66-05/71	B 18								
Engine: All engines	Information:					1.2547						
Engine: All engines	Information: version BOSCH						2.7476PHT					
2.0	Petrol	74	11/68-05/71	B 20 B								
Engine: All engines	Information: version BOSCH						2.7476PHT					

A10	CONDENSER	A20	CONTACT SET	A40	DISTRIBUTOR CAP	A50	ROTOR	A70	PICK-UP
C10	COIL	C20	IGNITION MODULE	C30	ELECTRONIC IGNITION KIT	E01	IGNITION CABLE SET		

The present application list is a brief version. For the detailed information about the possibility of installation on a specific vehicle, please refer to our web-catalogue http://catalogo.facet.eu/

Vehicle	alim.	kW	Date	Engine	FUNCTIONS ON THE VEHICLE							
					A10	A20	A40	A50	A70	C10 - C30	C20	E01
P 1800												
1.8	Petrol	66	04/62-05/70	B 18 A								
All engines						1.2547						
1.8	Petrol	76	04/62-05/70	--								
All engines						1.2547						
1.8 S	Petrol	71	04/62-05/70	--								
All engines						1.2547						
P 210 DUETT												
1.8	Petrol	55	08/61-07/67	B 18 A								
All engines	version BOSCH						2.7476PHT					
P 2200												
1.8	Petrol	50	09/64-08/67	B 18 A								
All engines						1.2547						
1.8	Petrol	59	09/64-08/67	B 18 D								
All engines						1.2547						
1.8	Petrol	63	09/64-08/67	B 18 B								
All engines						1.2547						
PV 544												
1.6	Petrol	44	08/61-07/66	B 16 A								
All engines	version BOSCH						2.7476PHT					
1.6	Petrol	61	08/61-07/67	B 16 B								
All engines	version BOSCH						2.7476PHT					
1.8	Petrol	50	08/61-07/67	B 18 A								
All engines						1.2521						
All engines	version BOSCH						2.7476PHT					
1.8	Petrol	59	08/61-07/67	B 18 D								
All engines	version BOSCH						2.7476PHT					
S40 I												
1.6	Petrol	77	09/95-08/99	B 4164 S								
All engines	Fitting Position:for cylinder 1, Fitting Position:for cylinder 4, x 1, D.I.S., connector type SAE									9.6255 C10		
All engines	Fitting Position:for cylinder 2, Fitting Position:for cylinder 3, x 1, D.I.S., connector type SAE									9.6256 C10		
All engines												4.7061
1.6	Petrol	80	03/99-12/03	B 4164 S2								
All engines												4.7059

A10	CONDENSER	A20	CONTACT SET	A40	DISTRIBUTOR CAP	A50	ROTOR	A70	PICK-UP
C10	COIL	C20	IGNITION MODULE	C30	ELECTRONIC IGNITION KIT	E01	IGNITION CABLE SET		

The present application list is a brief version. For the detailed information about the possibility of installation on a specific vehicle, please refer to our web-catalogue http://catalogo.facet.eu/

Vehicle	alim.	kW	Date	Engine	FUNCTIONS ON THE VEHICLE: A10	A20	A40	A50	A70	C10 - C30	C20	E01
1.8	Petrol	85	07/95-12/03	ENGINE: B 4184 S, B 4184 S2, B 4184 S3								

Engine	Information	A10	A20	A40	A50	A70	C10 - C30		C20	E01
Eng. B 4184 S	Fitting Position:for cylinder 1, Fitting Position:for cylinder 4, x 1, D.I.S., connector type SAE						9.6255	C10		
Eng. B 4184 S	Fitting Position:for cylinder 2, Fitting Position:for cylinder 3, x 1, D.I.S., connector type SAE						9.6256	C10		
Eng. B 4184 S2, B 4184 S3										4.7059
Eng. B 4184 S										4.7061

Vehicle	alim.	kW	Date	Engine	A10	A20	A40	A50	A70	C10 - C30	C20	E01
1.8	Petrol	90	03/99-12/03	ENGINE: B 4184 S2, B 4184 S9								

Engine	Information	A10	A20	A40	A50	A70	C10 - C30		C20	E01
All engines										4.7059

Vehicle	alim.	kW	Date	Engine	A10	A20	A40	A50	A70	C10 - C30	C20	E01
1.8 16V	Petrol	90	08/00->	ENGINE: B 4184 S10								

Engine	Information	A10	A20	A40	A50	A70	C10 - C30		C20	E01
All engines										4.7059

Vehicle	alim.	kW	Date	Engine	A10	A20	A40	A50	A70	C10 - C30	C20	E01
1.9 T4	Petrol	147	05/97-07/00	ENGINE: B 4194 T, B 4194 T2								

Engine	Information	A10	A20	A40	A50	A70	C10 - C30		C20	E01
All engines										4.7059

Vehicle	alim.	kW	Date	Engine	A10	A20	A40	A50	A70	C10 - C30	C20	E01
2.0	Petrol	100	07/95-12/03	ENGINE: B 4204 S, B 4204 S2								

Engine	Information	A10	A20	A40	A50	A70	C10 - C30		C20	E01
All engines	Fitting Position:for cylinder 1, Fitting Position:for cylinder 4, production date -> 1999, x 1, D.I.S., connector type SAE						9.6255	C10		
All engines	Fitting Position:for cylinder 2, Fitting Position:for cylinder 3, production date -> 1999, x 1, D.I.S., connector type SAE						9.6256	C10		
Eng. B 4204 S2										4.7059
Eng. B 4204 S										4.7061

Vehicle	alim.	kW	Date	Engine	A10	A20	A40	A50	A70	C10 - C30	C20	E01
2.0	Petrol	103	07/95-08/99	ENGINE: B 4204 S								

Engine	Information	A10	A20	A40	A50	A70	C10 - C30		C20	E01
All engines	Fitting Position:for cylinder 1, Fitting Position:for cylinder 4, x 1, D.I.S., connector type SAE						9.6255	C10		
All engines	Fitting Position:for cylinder 2, Fitting Position:for cylinder 3, x 1, D.I.S., connector type SAE						9.6256	C10		
All engines										4.7061

Vehicle	alim.	kW	Date	Engine	A10	A20	A40	A50	A70	C10 - C30	C20	E01
2.0 T	Petrol	118	10/97-12/03	ENGINE: B 4204 T								

Engine	Information	A10	A20	A40	A50	A70	C10 - C30		C20	E01
All engines										4.7059

Vehicle	alim.	kW	Date	Engine	A10	A20	A40	A50	A70	C10 - C30	C20	E01
2.0 T	Petrol	120	06/01-12/03	ENGINE: B 4204 T3								

Engine	Information	A10	A20	A40	A50	A70	C10 - C30		C20	E01
All engines										4.7059

Vehicle	alim.	kW	Date	Engine	A10	A20	A40	A50	A70	C10 - C30	C20	E01
2.0 T4	Petrol	147	07/00-12/03	ENGINE: B 4204 T5								

Engine	Information	A10	A20	A40	A50	A70	C10 - C30		C20	E01
All engines										4.7059

S40 II

Vehicle	alim.	kW	Date	Engine	A10	A20	A40	A50	A70	C10 - C30	C20	E01
1.6	Petrol	74	01/05-12/12	ENGINE: B 4164 S3								

Engine	Information	A10	A20	A40	A50	A70	C10 - C30		C20	E01
All engines	ch. 106167 ->, x 1, D.I.S.						9.6381	C10		
All engines	->ch. 106166, x 1, D.I.S.						9.6432	C10		
All engines										4.7242

Vehicle	alim.	kW	Date	Engine	A10	A20	A40	A50	A70	C10 - C30	C20	E01
1.8	Petrol	92	04/04-12/10	ENGINE: B 4184 S11								

Engine	Information	A10	A20	A40	A50	A70	C10 - C30		C20	E01
All engines	x 4, COIL ON PLUG						9.6380	C10		

A10	CONDENSER	A20	CONTACT SET	A40	DISTRIBUTOR CAP	A50	ROTOR	A70	PICK-UP
C10	COIL	C20	IGNITION MODULE	C30	ELECTRONIC IGNITION KIT	E01	IGNITION CABLE SET		

The present application list is a brief version. For the detailed information about the possibility of installation on a specific vehicle, please refer to our web-catalogue http://catalogo.facet.eu/

Vehicle	alim.	kW	Date	Engine	FUNCTIONS ON THE VEHICLE A10	A20	A40	A50	A70	C10 - C30	C20	E01
1.8 FlexFuel	Petrol/ Ethanol	92	01/06-12/10	B 4184 S8								
Engine: All engines	Information: x 4, COIL ON PLUG									9.6380 C10		
2.0	Petrol	107	10/06-12/12	B 4204 S3								
Engine: All engines	Information: x 4, COIL ON PLUG									9.6380 C10		
2.0 F	Petrol/ Ethanol	107	10/09-12/12	B 4204 S4								
Engine: All engines	Information: x 4, COIL ON PLUG									9.6380 C10		
2.4	Petrol	103	01/04-12/10	B 5244 S5								
Engine: All engines	Information: ->ch. 81811, ch. 81812 ->, x 5, COIL ON PLUG									9.6378 C10		
2.4	Petrol	125	01/04-12/12	B 5244 S4								
Engine: All engines	Information: ->ch. 83812, ch. 83813 ->, x 5, COIL ON PLUG									9.6378 C10		
T5	Petrol	162	01/04-12/07	B 5254 T3								
Engine: All engines	Information: x 5, COIL ON PLUG									9.6378 C10		
T5	Petrol	169	03/07-12/12	B 5254 T7								
Engine: All engines	Information: x 5, COIL ON PLUG									9.6378 C10		
T5 AWD	Petrol	162	04/04-12/07	B 5254 T3								
Engine: All engines	Information: x 5, COIL ON PLUG									9.6378 C10		
T5 AWD	Petrol	169	03/07-12/10	B 5254 T7								
Engine: All engines	Information: x 5, COIL ON PLUG									9.6378 C10		
S60 I												
2.0 T	Petrol	132	07/00-04/10	B 5204 T5								
Engine: All engines	Information: ->year 01/06/04, x 5, COIL ON PLUG, incl. spark plug connector									9.6348 C10		
Engine: All engines	Information: 01/07/04 ->, x 5, COIL ON PLUG									9.6378 C10		
2.3 T5	Petrol	195	07/00-09/02	B 5234 T7								
Engine: All engines	Information: Qty: 5									9.6348 C10		
Engine: All engines	Information: x 5, COIL ON PLUG, incl. spark plug connector									9.6348 C10		
2.4	Petrol	103	07/00-04/10	B 5244 S2								
Engine: All engines	Information: x 5, COIL ON PLUG, incl. spark plug connector									9.6348 C10		
2.4	Petrol	125	11/00-04/10	B 5244 S								
Engine: All engines	Information: x 5, COIL ON PLUG, incl. spark plug connector									9.6348 C10		
2.4	Petrol	132	01/05-10/06	B 5244 T4								
Engine: All engines	Information: x 5, COIL ON PLUG, incl. spark plug connector									9.6348 C10		

A10	CONDENSER	A20	CONTACT SET	A40	DISTRIBUTOR CAP	A50	ROTOR	A70	PICK-UP
C10	COIL	C20	IGNITION MODULE	C30	ELECTRONIC IGNITION KIT	E01	IGNITION CABLE SET		

The present application list is a brief version. For the detailed information about the possibility of installation on a specific vehicle, please refer to our web-catalogue http://catalogo.facet.eu/

Vehicle	alim.	kW	Date	Engine	FUNCTIONS ON THE VEHICLE A10	A20	A40	A50	A70	C10 - C30	C20	E01
2.4 AWD	Petrol	191	02/04-04/10	B 5244 T5								
Engine: All engines	Information: Qty: 5									9.6378 C10		
2.4 Bifuel	Petrol/ Compressed Natural Gas (CNG)	103	07/01-04/10	B 5244 SG, B 5244 SG2								
Engine: All engines	Information: x 5, COIL ON PLUG, incl. spark plug connector									9.6348 C10		
Engine: All engines	Information: x 5, COIL ON PLUG, incl. spark plug connector									9.6348 C10		
2.4 T	Petrol	147	07/00-04/10	B 5244 T3								
Engine: All engines	Information: x 5, COIL ON PLUG, incl. spark plug connector									9.6348 C10		
2.4 T AWD	Petrol	147	06/01-04/10	B 5244 T3								
Engine: All engines	Information: x 5, COIL ON PLUG, incl. spark plug connector									9.6348 C10		
2.4 T5	Petrol	191	04/04-04/10	B 5244 T5								
Engine: All engines	Information: x 5, COIL ON PLUG, incl. spark plug connector									9.6348 C10		
2.5 AWD	Petrol	224	09/03-04/10	B 5254 T4								
Engine: All engines	Information: Qty: 5									9.6378 C10		
2.5 T	Petrol	154	01/03-04/10	B 5254 T2								
Engine: All engines	Information: x 5, COIL ON PLUG, incl. spark plug connector									9.6348 C10		
2.5 T AWD	Petrol	154	07/02-04/10	B 5254 T2								
Engine: All engines	Information: x 5, COIL ON PLUG, incl. spark plug connector									9.6348 C10		
R 2,5 T AWD	Petrol	221	01/03-04/10	B 5254 T4								
Engine: All engines	Information: x 5, COIL ON PLUG, incl. spark plug connector									9.6348 C10		
T5	Petrol	184	07/00-04/10	B 5234 T3								
Engine: All engines	Information: x 5, COIL ON PLUG, incl. spark plug connector									9.6348 C10		
S60 II												
2.0 T	Petrol	132	05/12-12/15	B 5204 T8								
Engine: All engines	Information: x 5, COIL ON PLUG									9.6378 C10		
2.5 T	Petrol	183	01/13->	B 5254 T14								
Engine: All engines	Information: Qty: 5									9.6378 C10		
2.5 T5	Petrol	186	09/11-12/15	B 5254 T5								
Engine: All engines	Information: x 5, COIL ON PLUG									9.6378 C10		
2.5 T5 AWD	Petrol	183	03/15-12/18	B 5254 T14								
Engine: All engines	Information: x 5, COIL ON PLUG									9.6378 C10		

A10	CONDENSER	A20	CONTACT SET	A40	DISTRIBUTOR CAP	A50	ROTOR	A70	PICK-UP
C10	COIL	C20	IGNITION MODULE	C30	ELECTRONIC IGNITION KIT	E01	IGNITION CABLE SET		

The present application list is a brief version. For the detailed information about the possibility of installation on a specific vehicle, please refer to our web-catalogue http://catalogo.facet.eu/

Vehicle	alim.	kW	Date	Engine	FUNCTIONS ON THE VEHICLE A10	A20	A40	A50	A70	C10 - C30	C20	E01
2.5 T5 AWD	Petrol	186	09/12-12/15	**B 5254 T5**								

Engine	Information	A10	A20	A40	A50	A70	C10 - C30		C20	E01
All engines	Qty: 5						9.6378	C10		

T	Petrol	157	04/14->	**B 5204 T9**								

Engine	Information	A10	A20	A40	A50	A70	C10 - C30		C20	E01
All engines	Qty: 5						9.6378	C10		

T5 AWD	Petrol	187	08/15-12/18	**B 5254 T12**								

Engine	Information	A10	A20	A40	A50	A70	C10 - C30		C20	E01
All engines	x 5, COIL ON PLUG						9.6378	C10		

S70

2.0	Petrol	105	01/97-11/00	**B 5204 T2**								

Engine	Information	A10	A20	A40	A50	A70	C10 - C30		C20	E01
All engines							9.8123	C30		

2.0	Petrol	120	01/97-11/00	**B 5204 T4**								

Engine	Information	A10	A20	A40	A50	A70	C10 - C30		C20	E01
All engines	x 5, COIL ON PLUG, incl. spark plug connector						9.6348	C10		

2.0	Petrol	132	01/97-11/00	**B 5204 T2**								

Engine	Information	A10	A20	A40	A50	A70	C10 - C30		C20	E01
All engines	version Bosch			2.7530/30PHT	3.7573/47RS					
All engines							9.8123	C30		4.7064

2.0	Petrol	93	01/97-11/00	**B 5202 FS, B 5202 S**								

Engine	Information	A10	A20	A40	A50	A70	C10 - C30		C20	E01
All engines	version Bosch			2.7530/30PHT	3.7573/47RS					
Eng. B 5202 FS							9.8123	C30		
Eng. B 5202 S							9.8123	C30		
All engines										4.7064

2.0 Turbo	Petrol	155	01/97-11/00	**B 5204 T2**								

Engine	Information	A10	A20	A40	A50	A70	C10 - C30		C20	E01
All engines							9.8123	C30		

2.0 Turbo	Petrol	166	01/97-11/00	**B 5204 T3**								

Engine	Information	A10	A20	A40	A50	A70	C10 - C30		C20	E01
All engines	MODEL TO: 1998, version Bosch			2.7530/30PHT	3.7573/47RS					
All engines							9.8123	C30		
All engines	MODEL TO: 1998									4.7064

2.3	Petrol	120	01/97-07/99	**B 5234 FS**								

Engine	Information	A10	A20	A40	A50	A70	C10 - C30		C20	E01
All engines	MODEL TO: 1998, version Bosch			2.7530/30PHT	3.7573/47RS					
All engines	MODEL FROM: 1999, Qty: 5						9.6348	C10		
All engines	MODEL TO: 1998						9.8123	C30		4.7064

2.3	Petrol	177	11/96-11/00	**B 5234 T3**								

Engine	Information	A10	A20	A40	A50	A70	C10 - C30		C20	E01
All engines							9.8123	C30		

2.3	Petrol	195	04/99-09/00	**B 5234 T7**								

Engine	Information	A10	A20	A40	A50	A70	C10 - C30		C20	E01
All engines	MODEL TO: 1998, version Bosch			2.7530/30PHT	3.7573/47RS					
All engines	x 5, COIL ON PLUG, incl. spark plug connector						9.6348	C10		
All engines	MODEL TO: 1998									4.7064

A10	CONDENSER	**A20**	CONTACT SET	**A40**	DISTRIBUTOR CAP	**A50**	ROTOR	**A70**	PICK-UP
C10	COIL	**C20**	IGNITION MODULE	**C30**	ELECTRONIC IGNITION KIT	**E01**	IGNITION CABLE SET		

The present application list is a brief version. For the detailed information about the possibility of installation on a specific vehicle, please refer to our web-catalogue http://catalogo.facet.eu/

Vehicle	alim.	kW	Date	Engine	FUNCTIONS ON THE VEHICLE: A10	A20	A40	A50	A70	C10 - C30	C20	E01
2.3 AWD	Petrol	195	04/99-09/00	B 5234 T7								
Engine	Information	A10	A20	A40	A50	A70	C10 - C30		C20	E01		
All engines	MODEL TO: 1998, version Bosch			2.7530/30PHT	3.7573/47RS							
All engines	MODEL FROM: 1999, Qty: 5						9.6348	C10				
All engines	MODEL TO: 1998						9.8123	C30		4.7064		
2.3 T-5	Petrol	176	01/97-11/00	B 5234 T3								
Engine	Information	A10	A20	A40	A50	A70	C10 - C30		C20	E01		
All engines	MODEL TO: 1998, version Bosch			2.7530/30PHT	3.7573/47RS							
All engines							9.8123	C30				
All engines	MODEL TO: 1998									4.7064		
2.3 T5 AWD	Petrol	177	11/96-09/98	B 5234 T3								
Engine	Information	A10	A20	A40	A50	A70	C10 - C30		C20	E01		
All engines							9.8123	C30				
2.3 T5 AWD	Petrol	184	07/97-09/00	B 5234 T4								
Engine	Information	A10	A20	A40	A50	A70	C10 - C30		C20	E01		
All engines	version Bosch			2.7530/30PHT	3.7573/47RS							
All engines							9.8123	C30		4.7064		
2.3 T5-R AWD	Petrol	176	11/96-09/98	B 5234 T2								
Engine	Information	A10	A20	A40	A50	A70	C10 - C30		C20	E01		
All engines	version Bosch			2.7530/30PHT	3.7573/47RS							
All engines							9.8123	C30		4.7064		
2.3 Turbo	Petrol	184	01/97-11/00	B 5234 FT+, B 5234 T4								
Engine	Information	A10	A20	A40	A50	A70	C10 - C30		C20	E01		
Eng. B 5234 FT+	version Bosch			2.7530/30PHT	3.7573/47RS							
Eng. B 5234 FT+							9.8123	C30		4.7064		
Eng. B 5234 T4							9.8123	C30				
2.4	Petrol	103	08/99-11/00	B 5244 S2, B 5244 SG								
Engine	Information	A10	A20	A40	A50	A70	C10 - C30		C20	E01		
Eng. B 5244 S2	x 5, COIL ON PLUG, incl. spark plug connector						9.6348	C10				
Eng. B 5244 SG	Qty: 5						9.6348	C10				
2.4	Petrol	106	01/97-11/00	B 5252 FS								
Engine	Information	A10	A20	A40	A50	A70	C10 - C30		C20	E01		
All engines							9.8123	C30				
2.4	Petrol	121	06/98-11/00	B 5254 S, B5254SDENS								
Engine	Information	A10	A20	A40	A50	A70	C10 - C30		C20	E01		
Eng. B 5254 S	MODEL TO: 1998, version Bosch			2.7530/30PHT	3.7573/47RS							
Eng. B 5254 S	MODEL FROM: 1999, Qty: 5						9.6348	C10				
Eng. B5254SDENS	x 5, COIL ON PLUG, incl. spark plug connector						9.6348	C10				
Eng. B 5254 S	MODEL TO: 1998						9.8123	C30		4.7064		
2.4	Petrol	125	01/97-11/00	B 5244 S, B 5254 FS								
Engine	Information	A10	A20	A40	A50	A70	C10 - C30		C20	E01		
Eng. B 5244 S	x 5, COIL ON PLUG, incl. spark plug connector						9.6348	C10				
Eng. B 5254 FS							9.8123	C30				
2.4 AWD	Petrol	103	04/99-09/00	B 5244 S2								
Engine	Information	A10	A20	A40	A50	A70	C10 - C30		C20	E01		
All engines	x 5, COIL ON PLUG, incl. spark plug connector						9.6348	C10				
2.4 AWD	Petrol	106	11/96-05/99	B 5252 FS								
Engine	Information	A10	A20	A40	A50	A70	C10 - C30		C20	E01		
All engines	version Bosch			2.7530/30PHT	3.7573/47RS							

A10	CONDENSER	A20	CONTACT SET	A40	DISTRIBUTOR CAP	A50	ROTOR	A70	PICK-UP
C10	COIL	C20	IGNITION MODULE	C30	ELECTRONIC IGNITION KIT	E01	IGNITION CABLE SET		

The present application list is a brief version. For the detailed information about the possibility of installation on a specific vehicle, please refer to our web-catalogue http://catalogo.facet.eu/

Vehicle	alim.	kW	Date	Engine	FUNCTIONS ON THE VEHICLE A10	A20	A40	A50	A70	C10 - C30	C20	E01
2.4 AWD	Petrol	106	11/96-05/99	**B 5252 FS**						9.8123 C30		4.7064
2.4 AWD	Petrol	121	10/98-05/99	**B5254SDENS**						9.6348 C10		
2.4 AWD	Petrol	125	04/99-09/00	**B 5244 S**						9.6348 C10		
2.4 Bifuel	Natural Gas	103	07/99-11/00	**B 5244 SG2**						9.6348 C10		
2.4 Bifuel	Petrol/ Com-pressed Natural Gas (CNG)	106	10/98-11/00	**GB 5252 S**			2.7530/30PHT	3.7573/47RS				
										9.8123 C30		4.7064
2.4 Blu-Fuel	Petrol/ Com-pressed Natural Gas (CNG)	103	07/97-09/00	**B 5244 S2, B 5244 SG**						9.6348 C10		
2.4 T5 AWD	Petrol	142	11/96-04/99	**B 5254 T**			2.7530/30PHT	3.7573/47RS				
										9.6348 C10		
										9.8123 C30		
												4.7064
2.4 Turbo	Petrol	142	01/97-11/00	**B 5244 T, B 5254 T**			2.7530/30PHT	3.7573/47RS				
										9.6348 C10		
										9.8123 C30		
												4.7064
S80												
2.5 T	Petrol	147	01/08->	**B 5254 T6**						9.6378 C10		
2.5 T5	Petrol	187	01/12->	**B 5254 T12**						9.6378 C10		

Engine	Information
All engines	
All engines	x 5, COIL ON PLUG, incl. spark plug connector
All engines	Qty: 5
Eng. B 5244 SG	Qty: 5
Eng. B 5244 SG2	x 5, COIL ON PLUG, incl. spark plug connector
All engines	version Bosch
All engines	
Eng. B 5244 S2	Qty: 5
Eng. B 5244 SG	x 5, COIL ON PLUG, incl. spark plug connector
All engines	MODEL TO: 1998, version Bosch
All engines	01/07/98 ->, x 5, COIL ON PLUG, incl. spark plug connector
All engines	
All engines	MODEL TO: 1998
Eng. B 5254 T	MODEL TO: 1998, version Bosch
Eng. B 5244 T	x 5, COIL ON PLUG, incl. spark plug connector
Eng. B 5254 T	
Eng. B 5254 T	MODEL TO: 1998
All engines	Qty: 5

A10	CONDENSER	**A20**	CONTACT SET	**A40**	DISTRIBUTOR CAP	**A50**	ROTOR	**A70**	PICK-UP
C10	COIL	**C20**	IGNITION MODULE	**C30**	ELECTRONIC IGNITION KIT	**E01**	IGNITION CABLE SET		

The present application list is a brief version. For the detailed information about the possibility of installation on a specific vehicle, please refer to our web-catalogue http://catalogo.facet.eu/

Vehicle	alim.	kW	Date	Engine	FUNCTIONS ON THE VEHICLE A10	A20	A40	A50	A70	C10 - C30	C20	E01
T4	Petrol	132	01/12->	B 5204 T8								
Engine: All engines	Information: Qty: 5									9.6378 C10		
S80 I												
2.0	Petrol	120	06/98-07/06	B 5204 T4								
Engine: All engines	Information: x 5, COIL ON PLUG, incl. spark plug connector									9.6348 C10		
2.0 T	Petrol	132	12/99-07/06	B 5204 T5								
Engine: All engines	Information: production date -> 2004, x 5, COIL ON PLUG, incl. spark plug connector									9.6348 C10		
Engine: All engines	Information: production date 2005 ->, x 5, COIL ON PLUG									9.6378 C10		
2.0 T	Petrol	166	06/98-07/06	B 5204 T3								
Engine: All engines	Information: x 5, COIL ON PLUG, incl. spark plug connector									9.6348 C10		
2.3 R	Petrol	195	04/00-08/05	B 5234 T7								
Engine: All engines	Information: Qty: 5									9.6348 C10		
Engine: All engines	Information: x 5, COIL ON PLUG, incl. spark plug connector									9.6348 C10		
2.4	Petrol	103	01/99-07/06	B 5244 S2								
Engine: All engines	Information: x 5, COIL ON PLUG, incl. spark plug connector									9.6348 C10		
2.4	Petrol	125	01/99-07/06	B 5244 S								
Engine: All engines	Information: x 5, COIL ON PLUG, incl. spark plug connector									9.6348 C10		
2.4 Bifuel	Petrol/ Compressed Natural Gas (CNG)	103	09/01-07/06	B 5244 SG, B 5244 SG2								
Eng. B 5244 SG	Information: x 5, COIL ON PLUG, incl. spark plug connector									9.6348 C10		
Eng. B 5244 SG2	Information: Qty: 5									9.6348 C10		
Eng. B 5244 SG	Information: Qty: 5									9.6348 C10		
Eng. B 5244 SG2	Information: x 5, COIL ON PLUG, incl. spark plug connector									9.6348 C10		
2.4 LTP	Petrol	132	06/04-07/06	B 5244 T4								
Engine: All engines	Information: Qty: 5									9.6378 C10		
2.4 T	Petrol	147	06/00-07/06	B 5244 T3								
Engine: All engines	Information: x 5, COIL ON PLUG, incl. spark plug connector									9.6348 C10		
2.4 T5 AWD	Petrol	147	04/00-09/03	B 5244 T3								
Engine: All engines	Information: x 5, COIL ON PLUG, incl. spark plug connector									9.6348 C10		
2.5 T	Petrol	154	03/03-07/06	B 5254 T2								
Engine: All engines	Information: x 5, COIL ON PLUG, incl. spark plug connector									9.6348 C10		
2.5 T AWD	Petrol	154	07/03-07/06	B 5254 T2								
Engine: All engines	Information: x 5, COIL ON PLUG, incl. spark plug connector									9.6348 C10		

A10	CONDENSER	A20	CONTACT SET	A40	DISTRIBUTOR CAP	A50	ROTOR	A70	PICK-UP
C10	COIL	C20	IGNITION MODULE	C30	ELECTRONIC IGNITION KIT	E01	IGNITION CABLE SET		

The present application list is a brief version. For the detailed information about the possibility of installation on a specific vehicle, please refer to our web-catalogue http://catalogo.facet.eu/

Vehicle	alim.	kW	Date	Engine	FUNCTIONS ON THE VEHICLE A10	A20	A40	A50	A70	C10 - C30	C20	E01
2.8 T6	Petrol	200	05/98-12/01	B 6284 T						9.6348 C10		
2.9	Petrol	144	05/98-02/08	B 6294 S2						9.6348 C10		
2.9	Petrol	147	03/99-07/06	B 6294 S						9.6348 C10		
2.9	Petrol	150	05/98-07/06	B 6304 S3						9.6348 C10		
2.9 T6	Petrol	200	06/01-07/06	B 6294 T						9.6348 C10		
3.0	Petrol	144	06/01-07/06	B 6294 S2						9.6348 C10		
3.0 T6	Petrol	200	06/01-07/06	B 6294 T						9.6348 C10		
S80 II												
2.0	Petrol	107	01/08-09/12	B 4204 S3						9.6380 C10		
2.0 FlexFuel	Petrol/ Ethanol	107	01/08-12/11	B 4204 S4						9.6380 C10		
2.5 T	Petrol	147	03/06-12/11	B 5254 T6						9.6378 C10		
2.5 T	Petrol	170	01/10-12/12	B 5254 T10						9.6378 C10		
2.5 T	Petrol	183	09/12-12/16	B 5254 T14						9.6378 C10		
2.5 T	Petrol	187	01/12-04/16	B 5254 T12						9.6378 C10		
2.5 T AWD	Petrol	147	10/06-04/09	B 5254 T6						9.6378 C10		

Engine	Information
All engines	x 6, COIL ON PLUG, incl. spark plug connector
All engines	x 4, COIL ON PLUG
All engines	x 5, COIL ON PLUG
All engines	Qty: 5

A10	CONDENSER	A20	CONTACT SET	A40	DISTRIBUTOR CAP	A50	ROTOR	A70	PICK-UP
C10	COIL	C20	IGNITION MODULE	C30	ELECTRONIC IGNITION KIT	E01	IGNITION CABLE SET		

The present application list is a brief version. For the detailed information about the possibility of installation on a specific vehicle, please refer to our web-catalogue http://catalogo.facet.eu/

Vehicle	alim.	kW	Date	Engine	FUNCTIONS ON THE VEHICLE: A10	A20	A40	A50	A70	C10 - C30	C20	E01
2.5 T FlexFuel	Petrol/ Ethanol	147	05/08-12/11	**B 5254 T8**								

Engine	Information	A10	A20	A40	A50	A70	C10 - C30		C20	E01
All engines	x 5, COIL ON PLUG						9.6378	C10		

2.5 T FlexFuel	Petrol/ Ethanol	170	01/10-12/11	**B 5254 T11**								

Engine	Information	A10	A20	A40	A50	A70	C10 - C30		C20	E01
All engines	x 5, COIL ON PLUG						9.6378	C10		

V40 I

1.6	Petrol	77	12/95-08/99	**B 4164 S**								

Engine	Information	A10	A20	A40	A50	A70	C10 - C30		C20	E01
All engines	Fitting Position:for cylinder 1, Fitting Position:for cylinder 4, x 1, D.I.S., connector type SAE						9.6255	C10		
All engines	Fitting Position:for cylinder 2, Fitting Position:for cylinder 3, x 1, D.I.S., connector type SAE						9.6256	C10		
All engines										4.7061

1.6	Petrol	80	03/99-06/04	**B 4164 S2**								

Engine	Information	A10	A20	A40	A50	A70	C10 - C30		C20	E01
All engines										4.7059

1.8	Petrol	85	07/95-08/99	**B 4184 S, B 4184 S3**								

Engine	Information	A10	A20	A40	A50	A70	C10 - C30		C20	E01
Eng. B 4184 S	Fitting Position:for cylinder 1, Fitting Position:for cylinder 4, x 1, D.I.S., connector type SAE						9.6255	C10		
Eng. B 4184 S	Fitting Position:for cylinder 2, Fitting Position:for cylinder 3, x 1, D.I.S., connector type SAE						9.6256	C10		
All engines										4.7061

1.8	Petrol	90	03/99-06/04	**B 4184 S2, B 4184 S3, B 4184 S9**								

Engine	Information	A10	A20	A40	A50	A70	C10 - C30		C20	E01
All engines										4.7059

1.8 16V	Petrol	90	08/00->	**B 4184 S10**								

Engine	Information	A10	A20	A40	A50	A70	C10 - C30		C20	E01
All engines										4.7059

1.9 T4	Petrol	147	05/97-07/00	**B 4194 T**								

Engine	Information	A10	A20	A40	A50	A70	C10 - C30		C20	E01
All engines										4.7059

2.0	Petrol	100	07/95-06/04	**B 4204 S, B 4204 S2**								

Engine	Information	A10	A20	A40	A50	A70	C10 - C30		C20	E01
Eng. B 4204 S	Fitting Position:for cylinder 1, Fitting Position:for cylinder 4, production date -> 1999, x 1, D.I.S., connector type SAE						9.6255	C10		
Eng. B 4204 S	Fitting Position:for cylinder 2, Fitting Position:for cylinder 3, production date -> 1999, x 1, D.I.S., connector type SAE						9.6256	C10		
Eng. B 4204 S2										4.7059
Eng. B 4204 S										4.7061

2.0	Petrol	103	07/95-08/99	**B 4204 S**								

Engine	Information	A10	A20	A40	A50	A70	C10 - C30		C20	E01
All engines	Fitting Position:for cylinder 1, Fitting Position:for cylinder 4, x 1, D.I.S., connector type SAE						9.6255	C10		
All engines	Fitting Position:for cylinder 2, Fitting Position:for cylinder 3, x 1, D.I.S., connector type SAE						9.6256	C10		
All engines										4.7061

2.0 T	Petrol	118	10/97-07/00	**B 4204 T**								

Engine	Information	A10	A20	A40	A50	A70	C10 - C30		C20	E01
All engines										4.7059

A10	CONDENSER	**A20**	CONTACT SET	**A40**	DISTRIBUTOR CAP	**A50**	ROTOR	**A70**	PICK-UP
C10	COIL	**C20**	IGNITION MODULE	**C30**	ELECTRONIC IGNITION KIT	**E01**	IGNITION CABLE SET		

The present application list is a brief version. For the detailed information about the possibility of installation on a specific vehicle, please refer to our web-catalogue http://catalogo.facet.eu/

Vehicle	alim.	kW	Date	Engine	FUNCTIONS ON THE VEHICLE							
					A10	A20	A40	A50	A70	C10 - C30	C20	E01
2.0 T	Petrol	120	06/01-06/04	ENGINE B 4204 T3								
Engine: All engines	Information:											4.7059
2.0 T	Petrol	121	07/99-06/04	ENGINE B 4204 T2								
Engine: All engines	Information:											4.7059
2.0 T4	Petrol	147	07/00-06/04	ENGINE B 4204 T5								
Engine: All engines	Information:											4.7059
V40 II												
T4	Petrol	132	07/13-12/15	ENGINE B 5204 T8								
Engine: All engines	Information: x 5, COIL ON PLUG									9.6378 C10		
T4 AWD	Petrol	132	07/13->	ENGINE B 5204 T8								
Engine: All engines	Information: x 5, COIL ON PLUG									9.6378 C10		
T5	Petrol	157	03/13-12/15	ENGINE B 5204 T9								
Engine: All engines	Information: x 5, COIL ON PLUG									9.6378 C10		
T5	Petrol	183	01/14->	ENGINE B 5254 T14								
Engine: All engines	Information: x 5, COIL ON PLUG									9.6378 C10		
T5	Petrol	187	12/12->	ENGINE B 5254 T12								
Engine: All engines	Information: x 5, COIL ON PLUG									9.6378 C10		
T5 AWD	Petrol	157	03/13->	ENGINE B 5204 T9								
Engine: All engines	Information: x 5, COIL ON PLUG									9.6378 C10		
T5 AWD	Petrol	183	01/14->	ENGINE B 5254 T14								
Engine: All engines	Information: x 5, COIL ON PLUG									9.6378 C10		
T5 AWD	Petrol	187	01/13->	ENGINE B 5254 T12								
Engine: All engines	Information: x 5, COIL ON PLUG									9.6378 C10		
V50												
1.6	Petrol	74	01/05-12/12	ENGINE B 4164 S3								
Engine: All engines	Information: ch. 105440 ->, x 1, D.I.S.									9.6381 C10		
Engine: All engines	Information: ->ch. 105439, x 1, D.I.S.									9.6432 C10		
Engine: All engines	Information:											4.7242
1.8	Petrol	92	04/04-12/10	ENGINE B 4184 S11								
Engine: All engines	Information: x 4, COIL ON PLUG									9.6380 C10		

A10	CONDENSER	A20	CONTACT SET	A40	DISTRIBUTOR CAP	A50	ROTOR	A70	PICK-UP
C10	COIL	C20	IGNITION MODULE	C30	ELECTRONIC IGNITION KIT	E01	IGNITION CABLE SET		

The present application list is a brief version. For the detailed information about the possibility of installation on a specific vehicle, please refer to our web-catalogue http://catalogo.facet.eu/

Vehicle	alim.	kW	Date	Engine	FUNCTIONS ON THE VEHICLE A10	A20	A40	A50	A70	C10 - C30	C20	E01
1.8 BiFuel	Petrol/ Liquified Petro-leum Gas (LPG)	93	01/09-09/10	ENGINE **B 4184 S8**								
Engine: All engines	Information: x 4, COIL ON PLUG									9.6380 C10		
1.8 FlexFuel	Petrol/ Ethanol	92	01/05-12/10	ENGINE **B 4184 S8**								
Engine: All engines	Information: x 4, COIL ON PLUG									9.6380 C10		
2.0	Petrol	107	10/06-12/12	ENGINE **B 4204 S3**								
Engine: All engines	Information: x 4, COIL ON PLUG									9.6380 C10		
2.0 FlexFuel	Petrol/ Ethanol	107	01/10-12/12	ENGINE **B 4204 S4**								
Engine: All engines	Information: x 4, COIL ON PLUG									9.6380 C10		
2.4	Petrol	103	04/04-12/10	ENGINE **B 5244 S5**								
Engine: All engines	Information: ->ch. 81811, ch. 81812 ->, x 5, COIL ON PLUG									9.6378 C10		
2.4	Petrol	125	04/04-12/10	ENGINE **B 5244 S4**								
Engine: All engines	Information: ->ch. 81811, ch. 81812 ->, x 5, COIL ON PLUG									9.6378 C10		
2.4 AWD	Petrol	125	08/06-12/09	ENGINE **B 5244 S4**								
Engine: All engines	Information: Qty: 5									9.6378 C10		
T5	Petrol	162	04/04-12/07	ENGINE **B 5254 T3**								
Engine: All engines	Information: x 5, COIL ON PLUG									9.6378 C10		
T5	Petrol	169	03/07-12/12	ENGINE **B 5254 T7**								
Engine: All engines	Information: x 5, COIL ON PLUG									9.6378 C10		
T5 AWD	Petrol	162	04/04-12/07	ENGINE **B 5254 T3**								
Engine: All engines	Information: x 5, COIL ON PLUG									9.6378 C10		
T5 AWD	Petrol	169	03/07-12/10	ENGINE **B 5254 T7**								
Engine: All engines	Information: x 5, COIL ON PLUG									9.6378 C10		
V60 I												
2.0 BiFuel	Petrol/ Liquified Petro-leum Gas (LPG)	157	03/14-12/15	ENGINE **B 5204 T9**								
Engine: All engines	Information: x 5, COIL ON PLUG									9.6378 C10		
2.0 T	Petrol	132	01/14-07/18	ENGINE **B 5204 T8**								
Engine: All engines	Information: x 5, COIL ON PLUG									9.6378 C10		

A10	CONDENSER	**A20**	CONTACT SET	**A40**	DISTRIBUTOR CAP	**A50**	ROTOR	**A70**	PICK-UP
C10	COIL	**C20**	IGNITION MODULE	**C30**	ELECTRONIC IGNITION KIT	**E01**	IGNITION CABLE SET		

The present application list is a brief version. For the detailed information about the possibility of installation on a specific vehicle, please refer to our web-catalogue http://catalogo.facet.eu/

Vehicle	alim.	kW	Date	Engine	FUNCTIONS ON THE VEHICLE							
					A10	A20	A40	A50	A70	C10 - C30	C20	E01
T5	Petrol	157	10/13-05/18	**B 5204 T9**								
All engines	x 5, COIL ON PLUG									9.6378 C10		
T5 AWD	Petrol	183	03/15-05/18	**B 5254 T14**								
All engines	x 5, COIL ON PLUG									9.6378 C10		
T5 AWD	Petrol	187	04/15-05/18	**B 5254 T12**								
All engines	x 5, COIL ON PLUG									9.6378 C10		
V70												
2.4 LPG	LPG	103	07/97-03/00	**B 5244 SG2**								
All engines	x 5, COIL ON PLUG, incl. spark plug connector									9.6348 C10		
V70 I												
2.0	Petrol	105	12/95-03/00	**B 5204 T2**								
All engines										9.8123 C30		
2.0	Petrol	120	01/97-12/00	**B 5204 T4**								
All engines	x 5, COIL ON PLUG, incl. spark plug connector									9.6348 C10		
2.0	Petrol	132	11/96-03/00	**B 5204 T2**								
All engines	version Bosch						2.7530/30PHT	3.7573/47RS				
All engines										9.8123 C30		4.7064
2.0	Petrol	93	12/95-03/00	**B 5202 FS, B 5202 S**								
Eng. B 5202 S	version Bosch						2.7530/30PHT	3.7573/47RS				
Eng. B 5202 S										9.8123 C30		4.7064
Eng. B 5202 FS										9.8123 C30		
2.0 Turbo	Petrol	155	12/95-03/00	**B 5204 T2**								
All engines										9.8123 C30		
2.0 Turbo	Petrol	166	11/96-12/00	**B 5204 T3**								
All engines	MODEL TO: 1998, version Bosch						2.7530/30PHT	3.7573/47RS				
All engines										9.8123 C30		
All engines	MODEL TO: 1998											4.7064
2.0 Turbo AWD	Petrol	166	11/96-12/00	**B 5204 T3**								
All engines	MODEL TO: 1998, version Bosch						2.7530/30PHT	3.7573/47RS				
All engines										9.8123 C30		
All engines	MODEL TO: 1998											4.7064
2.3	Petrol	120	01/97-07/99	**B 5234 FS**								
All engines	MODEL TO: 1998, version Bosch						2.7530/30PHT	3.7573/47RS				
All engines	MODEL FROM: 1999, Qty: 5									9.6348 C10		
All engines	MODEL TO: 1998									9.8123 C30		4.7064

A10	CONDENSER	**A20**	CONTACT SET	**A40**	DISTRIBUTOR CAP	**A50**	ROTOR	**A70**	PICK-UP
C10	COIL	**C20**	IGNITION MODULE	**C30**	ELECTRONIC IGNITION KIT	**E01**	IGNITION CABLE SET		

The present application list is a brief version. For the detailed information about the possibility of installation on a specific vehicle, please refer to our web-catalogue http://catalogo.facet.eu/

Vehicle	alim.	kW	Date	Engine	FUNCTIONS ON THE VEHICLE							
					A10	A20	A40	A50	A70	C10 - C30	C20	E01
2.3	Petrol	177	11/96-11/00	**B 5234 T3**								
All engines										9.8123 C30		
2.3 AWD	Petrol	177	04/97-09/98	**B 5234 T3**								
All engines	MODEL TO: 1998, version Bosch						2.7530/30PHT	3.7573/47RS				
All engines										9.8123 C30		
All engines	MODEL TO: 1998											4.7064
2.3 AWD	Petrol	195	12/98-02/00	**B 5234 T7, B 5234 T8**								
Eng. B 5234 T7	MODEL TO: 1998, version Bosch						2.7530/30PHT	3.7573/47RS				
Eng. B 5234 T7	MODEL FROM: 1999, Qty: 5									9.6348 C10		
Eng. B 5234 T8	x 5, COIL ON PLUG, incl. spark plug connector									9.6348 C10		
Eng. B 5234 T7	MODEL TO: 1998									9.8123 C30		4.7064
2.3 T AWD	Petrol	184	04/97-03/00	**B 5234 FT+, B 5234 T4, B 5234 T6**								
All engines	version Bosch						2.7530/30PHT	3.7573/47RS				
Eng. B 5234 FT+, B 5234 T6										9.8123 C30		
Eng. B 5234 T4, B 5234 T6										9.8123 C30		
All engines												4.7064
2.3 T-5	Petrol	176	11/96-12/00	**B 5234 T3**								
All engines	MODEL TO: 1998, version Bosch						2.7530/30PHT	3.7573/47RS				
All engines										9.8123 C30		
All engines	MODEL TO: 1998											4.7064
2.3 T-5 AWD	Petrol	176	01/97-12/00	**B 5234 T3**								
All engines	MODEL TO: 1998, version Bosch						2.7530/30PHT	3.7573/47RS				
All engines										9.8123 C30		
All engines	MODEL TO: 1998											4.7064
2.3 Turbo	Petrol	160	01/97-12/98	**B 5234 T2**								
All engines	version Bosch						2.7530/30PHT	3.7573/47RS				
All engines										9.8123 C30		4.7064
2.3 Turbo	Petrol	184	12/95-03/00	**B 5234 FT+, B 5234 T4**								
All engines	version Bosch						2.7530/30PHT	3.7573/47RS				
All engines										9.8123 C30		4.7064
Eng. B 5234 T4										9.8123 C30		
2.4	Petrol	103	03/99-12/00	**B 5244 S2, B 5244 SG2**								
Eng. B 5244 S2	x 5, COIL ON PLUG, incl. spark plug connector									9.6348 C10		
Eng. B 5244 SG2	Qty: 5									9.6348 C10		
2.4	Petrol	106	12/95-03/00	**B 5252 FS**								
All engines							2.7530/30PHT	3.7573/47RS		9.8123 C30		
2.4	Petrol	121	06/98-12/99	**B 5254 S, B5254SDENS**								
Eng. B 5254 S	MODEL TO: 1998, version Bosch						2.7530/30PHT	3.7573/47RS				
Eng. B 5254 S	MODEL FROM: 1999, Qty: 5									9.6348 C10		

A10	CONDENSER	**A20**	CONTACT SET	**A40**	DISTRIBUTOR CAP	**A50**	ROTOR	**A70**	PICK-UP
C10	COIL	**C20**	IGNITION MODULE	**C30**	ELECTRONIC IGNITION KIT	**E01**	IGNITION CABLE SET		

The present application list is a brief version. For the detailed information about the possibility of installation on a specific vehicle, please refer to our web-catalogue http://catalogo.facet.eu/

Vehicle	alim.	kW	Date	Engine	FUNCTIONS ON THE VEHICLE A10	A20	A40	A50	A70	C10 - C30	C20	E01
2.4	Petrol	121	06/98-12/99	**B 5254 S, B5254SDENS**								

Engine	Information	A10	A20	A40	A50	A70	C10 - C30		C20	E01
Eng. B5254SDENS	x 5, COIL ON PLUG, incl. spark plug connector						9.6348	C10		
Eng. B 5254 S	MODEL TO: 1998						9.8123	C30		4.7064

2.4	Petrol	125	12/95-05/00	B 5244 S, B 5254 FS

Engine	Information	A10	A20	A40	A50	A70	C10 - C30		C20	E01
Eng. B 5244 S	x 5, COIL ON PLUG, incl. spark plug connector						9.6348	C10		
Eng. B 5254 FS							9.8123	C30		

2.4 AWD	Petrol	121	06/98-12/99	B5254SDENS

Engine	Information	A10	A20	A40	A50	A70	C10 - C30		C20	E01
All engines	x 5, COIL ON PLUG, incl. spark plug connector						9.6348	C10		

2.4 Bifuel	Natural Gas	103	08/99-03/00	B 5244 SG2

Engine	Information	A10	A20	A40	A50	A70	C10 - C30		C20	E01
All engines	Qty: 5						9.6348	C10		
All engines	x 5, COIL ON PLUG, incl. spark plug connector						9.6348	C10		

2.4 Bifuel	Petrol/ Com-pressed Natural Gas (CNG)	106	05/98-12/99	GB 5252 S

Engine	Information	A10	A20	A40	A50	A70	C10 - C30		C20	E01
All engines	version Bosch			2.7530/30PHT	3.7573/47RS					
All engines							9.8123	C30		4.7064

2.4 Turbo	Petrol	142	04/96-12/00	B 5244 T, B 5254 T

Engine	Information	A10	A20	A40	A50	A70	C10 - C30		C20	E01
Eng. B 5244 T	x 5, COIL ON PLUG, incl. spark plug connector						9.6348	C10		
Eng. B 5254 T							9.8123	C30		

2.4 Turbo AWD	Petrol	142	04/96-12/00	B 5244 T, B 5254 T

Engine	Information	A10	A20	A40	A50	A70	C10 - C30		C20	E01
Eng. B 5254 T	MODEL TO: 1998, version Bosch			2.7530/30PHT	3.7573/47RS					
Eng. B 5244 T	x 5, COIL ON PLUG, incl. spark plug connector						9.6348	C10		
Eng. B 5254 T							9.8123	C30		
Eng. B 5254 T	MODEL TO: 1998									4.7064

2.4 Turbo AWD	Petrol	195	03/99-12/00	B 5244 T2

Engine	Information	A10	A20	A40	A50	A70	C10 - C30		C20	E01
All engines	x 5, COIL ON PLUG, incl. spark plug connector						9.6348	C10		

2.5	Petrol	106	01/97-03/00	B 5252 FS

Engine	Information	A10	A20	A40	A50	A70	C10 - C30		C20	E01
All engines	version Bosch			2.7530/30PHT	3.7573/47RS					
All engines							9.8123	C30		4.7064

V70 II

2.0 T	Petrol	132	11/99-08/07	B 5204 T5

Engine	Information	A10	A20	A40	A50	A70	C10 - C30		C20	E01
All engines	x 5, COIL ON PLUG						9.6378	C10		

2.3	Petrol	195	10/00-09/04	B 5234 T7

Engine	Information	A10	A20	A40	A50	A70	C10 - C30		C20	E01
All engines	x 5, COIL ON PLUG, incl. spark plug connector						9.6348	C10		

2.3 AWD	Petrol	195	10/00-09/04	B 5234 T7

Engine	Information	A10	A20	A40	A50	A70	C10 - C30		C20	E01
All engines	Qty: 5						9.6348	C10		

A10	CONDENSER	**A20**	CONTACT SET	**A40**	DISTRIBUTOR CAP	**A50**	ROTOR	**A70**	PICK-UP
C10	COIL	**C20**	IGNITION MODULE	**C30**	ELECTRONIC IGNITION KIT	**E01**	IGNITION CABLE SET		

The present application list is a brief version. For the detailed information about the possibility of installation on a specific vehicle, please refer to our web-catalogue http://catalogo.facet.eu/

Vehicle	alim.	kW	Date	Engine	FUNCTIONS ON THE VEHICLE							
					A10	A20	A40	A50	A70	C10 - C30	C20	E01
2.3 T5	Petrol	184	11/99-12/04	**B 5234 T3**								
All engines				x 5, COIL ON PLUG, incl. spark plug connector						9.6348 C10		
2.4	Petrol	103	03/00-08/07	**B 5244 S2**								
All engines				x 5, COIL ON PLUG, incl. spark plug connector						9.6348 C10		
2.4	Petrol	125	03/00-08/07	**B 5244 S**								
All engines				x 5, COIL ON PLUG, incl. spark plug connector						9.6348 C10		
2.4 Bifuel	Petrol/ Com-pressed Natural Gas (CNG)	103	09/01-08/07	**B 5244 SG, B 5244 SG2**								
All engines				x 5, COIL ON PLUG, incl. spark plug connector						9.6348 C10		
All engines				x 5, COIL ON PLUG, incl. spark plug connector						9.6348 C10		
2.4 T	Petrol	147	11/99-12/05	**B 5244 T3, B 5244 T4**								
Eng. B 5244 T3				x 5, COIL ON PLUG, incl. spark plug connector						9.6348 C10		
Eng. B 5244 T4				Qty: 5						9.6378 C10		
2.4 T AWD	Petrol	147	09/01-08/02	**B 5244 T3**								
All engines				x 5, COIL ON PLUG, incl. spark plug connector						9.6348 C10		
2.4 T5	Petrol	191	04/04-08/07	**B 5244 T5**								
All engines				x 5, COIL ON PLUG						9.6378 C10		
2.5 AWD	Petrol	155	09/02-12/04	**B 5254 T2**								
All engines				Qty: 5						9.6348 C10		
2.5 R Sport	Petrol	221	12/02-08/07	**B 5254 T4**								
All engines				Qty: 5						9.6378 C10		
2.5 T	Petrol	154	07/01-08/07	**B 5254 T2**								
All engines				x 5, COIL ON PLUG						9.6378 C10		
2.5 T AWD	Petrol	154	07/02-08/07	**B 5254 T2**								
All engines				x 5, COIL ON PLUG						9.6378 C10		
R 2,5 T AWD	Petrol	221	03/03-08/07	**B 5254 T4**								
All engines				x 5, COIL ON PLUG						9.6378 C10		
V70 III												
2.0	Petrol	107	10/07-12/11	**B 4204 S3**								
All engines				x 4, COIL ON PLUG						9.6380 C10		

A10	CONDENSER	**A20**	CONTACT SET	**A40**	DISTRIBUTOR CAP	**A50**	ROTOR	**A70**	PICK-UP
C10	COIL	**C20**	IGNITION MODULE	**C30**	ELECTRONIC IGNITION KIT	**E01**	IGNITION CABLE SET		

The present application list is a brief version. For the detailed information about the possibility of installation on a specific vehicle, please refer to our web-catalogue http://catalogo.facet.eu/

Vehicle	alim.	kW	Date	Engine	FUNCTIONS ON THE VEHICLE A10	A20	A40	A50	A70	C10 - C30	C20	E01
2.0 BiFuel	Petrol/ Liquified Petro-leum Gas (LPG)	157	03/13-12/15	ENGINE **B 5204 T9, B5204T9CNG**								
Eng. B 5204 T9				Qty: 5						9.6378 C10		
Eng. B5204T9CNG				x 5, COIL ON PLUG						9.6378 C10		
2.0 FlexiFuel	Petrol/ Ethanol	107	01/08-12/11	ENGINE **B 4204 S4**								
All engines				x 4, COIL ON PLUG						9.6380 C10		
2.0 GDI	Petrol	157	04/12-12/15	ENGINE **B 5204 T9**								
All engines				x 5, COIL ON PLUG						9.6378 C10		
2.5 T	Petrol	147	08/07-12/09	ENGINE **B 5254 T6**								
All engines				x 5, COIL ON PLUG						9.6378 C10		
2.5 T	Petrol	170	04/09-12/12	ENGINE **B 5254 T10**								
All engines				x 5, COIL ON PLUG						9.6378 C10		
2.5 T FlexiFuel	Petrol/ Ethanol	147	05/08-12/09	ENGINE **B 5254 T8**								
All engines				x 5, COIL ON PLUG						9.6378 C10		
2.5 T FlexiFuel	Petrol/ Ethanol	170	04/09-12/11	ENGINE **B 5254 T11**								
All engines				x 5, COIL ON PLUG						9.6378 C10		
XC60 I												
T5 AWD	Petrol	183	04/14-02/17	ENGINE **B 5254 T12**								
All engines				x 5, COIL ON PLUG						9.6378 C10		
T5 AWD	Petrol	187	04/14-02/17	ENGINE **B 5254 T12**								
All engines				x 5, COIL ON PLUG						9.6378 C10		
XC70 I												
2.3 T XC AWD	Petrol	195	01/01-07/04	ENGINE **B 5234 T7**								
All engines				Qty: 5						9.6348 C10		
2.4 T XC AWD	Petrol	147	01/05-12/06	ENGINE **B 5244 T4**								
All engines				Qty: 5						9.6378 C10		
2.5 T XC AWD	Petrol	154	09/02-08/07	ENGINE **B 5254 T2**								
All engines				x 5, COIL ON PLUG, incl. spark plug connector						9.6348 C10		
XC70 II												
T5 AWD	Petrol	187	08/15-12/16	ENGINE **B 5254 T12**								
All engines				x 5, COIL ON PLUG						9.6378 C10		

A10	CONDENSER	**A20**	CONTACT SET	**A40**	DISTRIBUTOR CAP	**A50**	ROTOR	**A70**	PICK-UP
C10	COIL	**C20**	IGNITION MODULE	**C30**	ELECTRONIC IGNITION KIT	**E01**	IGNITION CABLE SET		

The present application list is a brief version. For the detailed information about the possibility of installation on a specific vehicle, please refer to our web-catalogue http://catalogo.facet.eu/

Vehicle	alim.	kW	Date	Engine	FUNCTIONS ON THE VEHICLE							
					A10	A20	A40	A50	A70	C10 - C30	C20	E01
				ENGINE								
T6 AWD	Petrol	**183**	03/15-12/16	**B 5254 T14**								

Engine	Information	A10	A20	A40	A50	A70	C10 - C30		C20	E01
All engines	x 5, COIL ON PLUG						9.6378	C10		

XC90 I

				ENGINE								
2.5 T AWD	Petrol	**154**	10/02-09/14	**B 5254 T2, B 5254 T9**								

Engine	Information	A10	A20	A40	A50	A70	C10 - C30		C20	E01
Eng. B 5254 T2	x 5, COIL ON PLUG, incl. spark plug connector						9.6348	C10		
Eng. B 5254 T9	Qty: 5						9.6348	C10		

				ENGINE								
T6 AWD	Petrol	**200**	10/02-12/06	**B 6294 T**								

Engine	Information	A10	A20	A40	A50	A70	C10 - C30		C20	E01
All engines	x 6, COIL ON PLUG, incl. spark plug connector						9.6348	C10		

A10	CONDENSER	**A20**	CONTACT SET	**A40**	DISTRIBUTOR CAP	**A50**	ROTOR	**A70**	PICK-UP
C10	COIL	**C20**	IGNITION MODULE	**C30**	ELECTRONIC IGNITION KIT	**E01**	IGNITION CABLE SET		

The present application list is a brief version. For the detailed information about the possibility of installation on a specific vehicle, please refer to our web-catalogue http://catalogo.facet.eu/

Vehicle	alim.	kW	Date	Engine	FUNCTIONS ON THE VEHICLE							
					A10	A20	A40	A50	A70	C10 - C30	C20	E01
1500,1600												
1.5	Petrol	33	04/61-07/73	K								
All engines						1.2532HDV		3.7514RS				
1.5 L	Petrol	33	07/68-07/73	K								
All engines						1.2540						
1.5 S	Petrol	40	08/63-07/65	--								
All engines						1.2532HDV		3.7514RS				
1.6	Petrol	40	08/65-07/73	T, U								
All engines								3.7514RS				
1.6 L	Petrol	37	07/64-07/73	P								
All engines						1.2540						
1.6 L	Petrol	40	08/65-07/73	T, U								
All engines								3.7514RS				
1.6 TL	Petrol	40	08/65-07/73	T, U								
Eng. T						1.2532HDV						
All engines								3.7514RS				
AMAROK												
2.0 TSI	Petrol	118	12/10-10/16	CFPA								
All engines				x 4, ELDOR, Housing Colour:Black, COIL ON PLUG, incl. spark plug connector						9.6326 C10		
ARTEON												
1.4 eHybrid	Petrol/ Electric	115	11/20->	DGEB								
All engines				x 4, ELDOR, COIL ON PLUG, Number of pins:4, incl. spark plug connector						9.6499 C10		
2.0 TSI	Petrol	140	05/17->	CZPB, DKZA, DNNA								
All engines				01/10/18 ->, x 4, HITACHI, COIL ON PLUG, incl. spark plug connector						9.6536 C10		
2.0 TSi 4motion	Petrol	200	09/20->	DLRB								
All engines				x 4, HITACHI, COIL ON PLUG, incl. spark plug connector						9.6536 C10		
2.0 TSI 4motion	Petrol	206	06/20->	DJHC								
All engines				x 4, HITACHI, COIL ON PLUG, incl. spark plug connector						9.6536 C10		
BEETLE												
1.2 TSI	Petrol	77	07/11-07/19	CBZB								
All engines										9.8120 C30		4.7248

A10	CONDENSER	**A20**	CONTACT SET	**A40**	DISTRIBUTOR CAP	**A50**	ROTOR	**A70**	PICK-UP
C10	COIL	**C20**	IGNITION MODULE	**C30**	ELECTRONIC IGNITION KIT	**E01**	IGNITION CABLE SET		

The present application list is a brief version. For the detailed information about the possibility of installation on a specific vehicle, please refer to our web-catalogue http://catalogo.facet.eu/

Vehicle	alim.	kW	Date	Engine	FUNCTIONS ON THE VEHICLE: A10	A20	A40	A50	A70	C10 - C30	C20	E01
1.2 TSI 16V	Petrol	77	12/14-07/19	CYVD						9.6499 C10		
1.4 TSI	Petrol	110	12/14-07/19	CZDA						9.6499 C10		
1.4 TSI	Petrol	118	10/11-07/16	CAVD, CNWA, CTHD, CTKA						9.6374 C10		
2.0 TFSI	Petrol	147	04/11-07/16	CBFA, CCTA, CCZA						9.6326 C10		
2.0 TSI	Petrol	155	12/12-07/19	CPLA, CPPA						9.6536 C10		
2.0 TSI	Petrol	162	12/14-09/18	CULC						9.6536 C10		
2.5	Petrol	125	04/11-07/19	CBTA, CBUA, CCCA						9.6326 C10		

BORA

Vehicle	alim.	kW	Date	Engine	A10	A20	A40	A50	A70	C10 - C30	C20	E01
1.4 16V	Petrol	55	03/00-05/05	AHW, AKQ, APE, AXP, BCA								
				Eng. BCA: x 4, COIL ON PLUG, incl. spark plug connector						9.6374 C10		
				Eng. AHW, AKQ, APE, AXP						9.8120 C30		4.9575
1.6	Petrol	74	10/98-05/05	AEH, AKL, APF						9.8120 C30		4.9484
1.6	Petrol	75	08/00-05/05	AVU, BFQ						9.8120 C30		4.9585
1.6 16V	Petrol	77	02/00-05/05	ATN, AUS, AZD, BCB								
				Eng. AZD, BCB: x 4, COIL ON PLUG, incl. spark plug connector						9.6374 C10		
				Eng. ATN, AUS						9.8120 C30		4.9575
1.6 FSI	Petrol	81	01/02-05/05	BAD						9.6374 C10		
1.8	Petrol	92	10/98-05/05	AGN								4.9489

A10 CONDENSER	A20 CONTACT SET	A40 DISTRIBUTOR CAP	A50 ROTOR	A70 PICK-UP
C10 COIL	C20 IGNITION MODULE	C30 ELECTRONIC IGNITION KIT	E01 IGNITION CABLE SET	

The present application list is a brief version. For the detailed information about the possibility of installation on a specific vehicle, please refer to our web-catalogue http://catalogo.facet.eu/

Vehicle	alim.	kW	Date	Engine	FUNCTIONS ON THE VEHICLE A10	A20	A40	A50	A70	C10 - C30	C20	E01
1.8 4motion	Petrol	92	02/99-05/05	**AGN**						9.8120 C30		4.9489
1.8 T	Petrol	110	05/00-05/05	**AGU, AUM**								
Eng. AGU				x 4, COIL ON PLUG						9.6254S C10		
Eng. AUM				x 4, COIL ON PLUG, incl. spark plug connector						9.6329 C10		
Eng. AGU											9.4076	
1.8 T	Petrol	132	03/02-05/05	**AUQ**								
All engines				x 4, COIL ON PLUG, incl. spark plug connector						9.6329 C10		
2.0	Petrol	85	10/98-12/13	**APK, AQY, AZH, AZJ**								
Eng. APK, AQY										9.8120 C30		
Eng. AZH										9.8120 C30		
Eng. AZJ												4.7223
Eng. APK, AQY, AZH												4.9585
2.0 4motion	Petrol	85	04/00-05/05	**AZH, AZJ**								
Eng. AZH										9.8120 C30		4.9585
Eng. AZJ												4.7223
2.0 4motion	Petrol	88	12/99-05/03	**AZH**								
All engines										9.8120 C30		
2.3 V5	Petrol	110	10/98-10/00	**AGZ**								
All engines											9.4074	
2.3 V5	Petrol	125	10/00-05/05	**AQN**								
All engines				x 5, COIL ON PLUG						9.6335 C10		
2.3 V5 4motion	Petrol	110	12/98-10/00	**AGZ**								
All engines											9.4074	
2.3 V5 4motion	Petrol	125	10/00-05/05	**AQN**								
All engines				x 5, COIL ON PLUG						9.6335 C10		
2.8 V6 4motion	Petrol	150	03/99-05/05	**AUE, BDE**								
All engines				01/05/01 ->, x 6, ch. 1J2000001 ->, COIL ON PLUG, x 6, COIL ON PLUG						9.6335 C10		
2.8 VR6	Petrol	150	03/00-05/00	**AUE**								
All engines				ch. 1J-2-000 001 ->, Qty: 6						9.6335 C10		
CADDY I												
1.5	Petrol	51	08/82-07/83	**JB**								
All engines				version Bosch	0.0179/96	1.2534HDVS	2.7479PHT	3.7555RS				
All engines				ch. 14-F-000 370 ->								4.8725
All engines				->ch. 14-F-000 369								4.8727

A10	CONDENSER	**A20**	CONTACT SET	**A40**	DISTRIBUTOR CAP	**A50**	ROTOR	**A70**	PICK-UP
C10	COIL	**C20**	IGNITION MODULE	**C30**	ELECTRONIC IGNITION KIT	**E01**	IGNITION CABLE SET		

The present application list is a brief version. For the detailed information about the possibility of installation on a specific vehicle, please refer to our web-catalogue http://catalogo.facet.eu/

Vehicle	alim.	kW	Date	Engine	FUNCTIONS ON THE VEHICLE: A10	A20	A40	A50	A70	C10 - C30	C20	E01
1.6	Petrol	53	08/83-07/89	ENGINE HN								
All engines	version Bosch		0.0179/96	1.2534HDVS								
All engines	version Bosch, ->ch. 14-F-002 256				2.7479PHT	3.7555RS						
All engines	version Bosch, ch. 14-F-002 257 ->				2.7494PHT	3.7525RS						
All engines	ch. 14-F-000 370 ->											4.8725
All engines	->ch. 14-F-000 369											4.8727
1.6	Petrol	55	01/83-07/92	ENGINE EW								
All engines	version Bosch		0.0179/96	1.2534HDVS								
All engines	version Bosch, ->ch. 14-E-003 890				2.7479PHT	3.7555RS						
All engines	version Bosch, ch. 14-E-003 891 ->				2.7494PHT	3.7525RS						
All engines	ch. 14-F-000 370 ->											4.8725
All engines	->ch. 14-F-000 369											4.8727
1.8	Petrol	70	08/85-07/92	ENGINE JH								
All engines	->ch. 14-G-020 000, version Bosch				2.7494PHT							
All engines	ch. 14-H-000 001 ->, version Bosch				2.7530/36PHT							
All engines	version Bosch					3.7555RS	8.2719					
All engines	->ch. 14-J-020 000							9.6025	C10			
All engines	ch. 14-K-000 001 ->							9.6026	C10			
All engines										9.4007		
All engines	ch. 14-F-000 370 ->											4.8725
All engines	->ch. 14-F-000 369											4.8727
CADDY II												
1.4	Petrol	44	11/95-06/03	ENGINE AEX, AKV, APQ, AUD								
Eng. AEX, AKV, APQ	version Bosch				2.7494PHT	3.7573/21RS	8.2723					
Eng. AEX, AKV, APQ	version Marelli				2.8216PHT	3.8257RS						
Eng. AEX, APQ								9.8114	C30			
Eng. AUD								9.8120	C30			4.9601
Eng. AEX, AKV, APQ												4.9660
1.4	Petrol	55	08/00-01/04	ENGINE AUA								
All engines								9.8120	C30			4.9575
1.4 16V	Petrol	55	08/00-01/04	ENGINE AUA								
All engines								9.8120	C30			4.9575
1.6	Petrol	55	11/95-12/00	ENGINE 1F, AEE								
Eng. AEE	version Bosch				2.7494PHT							
Eng. 1F	version Bosch				2.7530/36PHT							
Eng. 1F	version Ducellier				2.7668PHT	3.7699RS						
Eng. AEE	version Marelli				2.8216PHT	3.8257RS						
All engines	version Bosch					3.7573/21RS	8.2723					
All engines								9.8114	C30			
Eng. 1F												4.8965
Eng. AEE	Pickup											4.9641
Eng. AEE												4.9660
60 1.4	Petrol	44	11/95-01/04	ENGINE AEX, APQ, AUD								
Eng. AEX, APQ	version Bosch				2.7494PHT	3.7573/21RS	8.2723					
Eng. AEX, APQ	version Marelli				2.8216PHT	3.8257RS						
Eng. AEX, APQ								9.8114	C30			4.9660
Eng. AUD								9.8120	C30			4.9601

A10	CONDENSER	A20	CONTACT SET	A40	DISTRIBUTOR CAP	A50	ROTOR	A70	PICK-UP
C10	COIL	C20	IGNITION MODULE	C30	ELECTRONIC IGNITION KIT	E01	IGNITION CABLE SET		

The present application list is a brief version. For the detailed information about the possibility of installation on a specific vehicle, please refer to our web-catalogue http://catalogo.facet.eu/

Vehicle	alim.	kW	Date	Engine	FUNCTIONS ON THE VEHICLE A10	A20	A40	A50	A70	C10 - C30	C20	E01
75 1.6	Petrol	55	11/95-09/00	1F, AEE								

Engine	Information	A10	A20	A40	A50	A70	C10 - C30		C20	E01
Eng. AEE	version Bosch			2.7494PHT						
Eng. 1F	version Bosch			2.7530/36PHT						
Eng. 1F	version Ducellier			2.7668PHT	3.7699RS					
Eng. AEE	version Marelli			2.8216PHT	3.8257RS					
All engines	version Bosch				3.7573/21RS	8.2723				
All engines							9.8114	C30		
Eng. 1F										4.8965
Eng. AEE										4.9660

CADDY III

1.0 TSI	Petrol	62	11/18->	DKRD

Engine	Information	A10	A20	A40	A50	A70	C10 - C30		C20	E01
All engines	x 3, BERU, ELDOR, COIL ON PLUG, incl. spark plug connector, Number of pins:4, incl. spark plug connector						9.6499	C10		

1.0 TSI	Petrol	75	11/15->	CHZG, DKRE

Engine	Information	A10	A20	A40	A50	A70	C10 - C30		C20	E01
All engines	x 3, x 4, BERU, ELDOR, HITACHI, COIL ON PLUG, incl. spark plug connector, Number of pins:4, incl. spark plug connector						9.6499	C10		

1.2 TSI	Petrol	62	06/15->	CYVC

Engine	Information	A10	A20	A40	A50	A70	C10 - C30		C20	E01
All engines	x 4, BERU, ELDOR, HITACHI, COIL ON PLUG, incl. spark plug connector, Number of pins:4, incl. spark plug connector						9.6499	C10		

1.2 TSI	Petrol	63	09/10-05/15	CBZA

Engine	Information	A10	A20	A40	A50	A70	C10 - C30		C20	E01
All engines							9.8120	C30		4.7248

1.2 TSI	Petrol	77	09/10-05/15	CBZB

Engine	Information	A10	A20	A40	A50	A70	C10 - C30		C20	E01
All engines							9.8120	C30		4.7248

1.4	Petrol	55	03/04-05/06	BCA

Engine	Information	A10	A20	A40	A50	A70	C10 - C30		C20	E01
All engines	x 4, COIL ON PLUG, incl. spark plug connector						9.6374	C10		

1.4	Petrol	59	05/06-08/10	BUD

Engine	Information	A10	A20	A40	A50	A70	C10 - C30		C20	E01
All engines	x 4, COIL ON PLUG, incl. spark plug connector						9.6374	C10		

1.4 TGI CNG	Petrol/ Compressed Natural Gas (CNG)	81	06/15->	CPWA

Engine	Information	A10	A20	A40	A50	A70	C10 - C30		C20	E01
All engines	x 4, BERU, ELDOR, HITACHI, COIL ON PLUG, incl. spark plug connector, Number of pins:4, incl. spark plug connector						9.6499	C10		

1.4 TSI	Petrol	92	05/15->	CZCB

Engine	Information	A10	A20	A40	A50	A70	C10 - C30		C20	E01
All engines	x 4, BERU, ELDOR, HITACHI, COIL ON PLUG, incl. spark plug connector, Number of pins:4, incl. spark plug connector						9.6499	C10		

1.4 TSI	Petrol	96	07/18->	DJKD

Engine	Information	A10	A20	A40	A50	A70	C10 - C30		C20	E01
All engines	x 4, BERU, ELDOR, COIL ON PLUG, incl. spark plug connector, Number of pins:4, incl. spark plug connector						9.6499	C10		

A10	CONDENSER	A20	CONTACT SET	A40	DISTRIBUTOR CAP	A50	ROTOR	A70	PICK-UP
C10	COIL	C20	IGNITION MODULE	C30	ELECTRONIC IGNITION KIT	E01	IGNITION CABLE SET		

The present application list is a brief version. For the detailed information about the possibility of installation on a specific vehicle, please refer to our web-catalogue http://catalogo.facet.eu/

Vehicle	alim.	kW	Date	Engine	FUNCTIONS ON THE VEHICLE A10	A20	A40	A50	A70	C10 - C30	C20	E01
1.6	Petrol	74	03/05-05/15	**BRY**								

Engine	Information	A10	A20	A40	A50	A70	C10 - C30		C20	E01
All engines							9.8120	C30		4.9585

1.6	Petrol	75	04/04-05/15	**BGU, BSE, BSF**

Engine	Information	A10	A20	A40	A50	A70	C10 - C30		C20	E01
All engines							9.8120	C30		4.9585

1.6	Petrol	81	11/15-09/20	**CWVA**

Engine	Information	A10	A20	A40	A50	A70	C10 - C30		C20	E01
All engines	x 4, BERU, ELDOR, HITACHI, COIL ON PLUG, incl. spark plug connector, Number of pins:4, incl. spark plug connector						9.6499	C10		

1.6 [ARG]	Petrol	69	10/05->	**UVC**

Engine	Information	A10	A20	A40	A50	A70	C10 - C30		C20	E01
All engines						8.2733	9.8114	C30		

1.6 BiFuel	Petrol/ Liquified Petro-leum Gas (LPG)	75	05/11-05/15	**CHGA**

Engine	Information	A10	A20	A40	A50	A70	C10 - C30		C20	E01
All engines							9.8120	C30		4.9585

1.6 SRE	Petrol	81	11/15-09/20	**CWVA**

Engine	Information	A10	A20	A40	A50	A70	C10 - C30		C20	E01
All engines	x 4, BERU, ELDOR, HITACHI, COIL ON PLUG, incl. spark plug connector, Number of pins:4, incl. spark plug connector						9.6499	C10		

1.8 [ARG]	Petrol	72	10/05->	**BUR**

Engine	Information	A10	A20	A40	A50	A70	C10 - C30		C20	E01
All engines						8.2723				

2.0 EcoFuel	CNG	80	04/06-05/15	**BSX**

Engine	Information	A10	A20	A40	A50	A70	C10 - C30		C20	E01
All engines										4.7223

CADDY IV

1.6 SRE	Petrol	81	02/21->	**DWYA**

Engine	Information	A10	A20	A40	A50	A70	C10 - C30		C20	E01
All engines	x 4, ELDOR, HITACHI, COIL ON PLUG, incl. spark plug connector, Number of pins:4, incl. spark plug connector						9.6499	C10		

CALIFORNIA

2.0 TSI	Petrol	110	07/12-07/19	**CJKB**

Engine	Information	A10	A20	A40	A50	A70	C10 - C30		C20	E01
All engines	x 4, ELDOR, Housing Colour:Black, COIL ON PLUG, incl. spark plug connector						9.6326	C10		

2.0 TSI	Petrol	150	05/11-07/19	**CJKA**

Engine	Information	A10	A20	A40	A50	A70	C10 - C30		C20	E01
All engines	x 4, ELDOR, Housing Colour:Black, COIL ON PLUG, incl. spark plug connector						9.6326	C10		

2.0 TSI 4motion	Petrol	150	07/11-07/19	**CJKA**

Engine	Information	A10	A20	A40	A50	A70	C10 - C30		C20	E01
All engines	x 4, ELDOR, Housing Colour:Black, COIL ON PLUG, incl. spark plug connector						9.6326	C10		

CAMPMOBILE

2.0 TSi	Petrol	110	07/12-08/15	**CJKB**

Engine	Information	A10	A20	A40	A50	A70	C10 - C30		C20	E01
All engines	x 4, ELDOR, Housing Colour:Black, COIL ON PLUG, incl. spark plug connector						9.6326	C10		

A10	CONDENSER	**A20**	CONTACT SET	**A40**	DISTRIBUTOR CAP	**A50**	ROTOR	**A70**	PICK-UP
C10	COIL	**C20**	IGNITION MODULE	**C30**	ELECTRONIC IGNITION KIT	**E01**	IGNITION CABLE SET		

The present application list is a brief version. For the detailed information about the possibility of installation on a specific vehicle, please refer to our web-catalogue http://catalogo.facet.eu/

Vehicle	alim.	kW	Date	Engine	FUNCTIONS ON THE VEHICLE A10	A20	A40	A50	A70	C10 - C30	C20	E01
2.0 TSi	Petrol	150	05/11-08/15	**CJKA**								
All engines	x 4, ELDOR, Housing Colour:Black, COIL ON PLUG, incl. spark plug connector									9.6326 C10		
2.0 TSi BlueMotion	Petrol	110	04/15-07/19	**CJKB**								
All engines	x 4, ELDOR, Housing Colour:Black, COIL ON PLUG, incl. spark plug connector									9.6326 C10		
2.0 TSi BlueMotion	Petrol	150	04/15-07/19	**CJKA**								
All engines	x 4, ELDOR, Housing Colour:Black, COIL ON PLUG, incl. spark plug connector									9.6326 C10		
CC												
1.4 TSI	Petrol	110	05/15-12/16	**CZDA**								
All engines	x 4, BERU, ELDOR, COIL ON PLUG, incl. spark plug connector, Number of pins:4, incl. spark plug connector									9.6499 C10		
1.4 TSI	Petrol	118	11/11-12/16	**CTHD**								
All engines	x 4, COIL ON PLUG, incl. spark plug connector									9.6374 C10		
1.4 TSI MultiFuel	Petrol/ Ethanol	118	11/11-12/16	**CKMA**								
All engines	x 4, COIL ON PLUG, incl. spark plug connector									9.6374 C10		
1.8 TSI	Petrol	112	11/11-12/16	**CDAB**								
All engines	x 4, ELDOR, Housing Colour:Black, COIL ON PLUG, incl. spark plug connector									9.6326 C10		
1.8 TSI	Petrol	118	11/11-12/16	**CDAA**								
All engines	x 4, ELDOR, Housing Colour:Black, COIL ON PLUG, incl. spark plug connector									9.6326 C10		
2.0 TFSI	Petrol	147	11/11-12/16	**CBFA, CCTA**								
All engines	x 4, ELDOR, Housing Colour:Black, COIL ON PLUG, incl. spark plug connector									9.6326 C10		
2.0 TSI	Petrol	147	11/11->	**CBFA, CCTA**								
All engines	Qty: 4									9.6326 C10		
2.0 TSI	Petrol	155	11/11-12/16	**CCZB**								
All engines	x 4, ELDOR, Housing Colour:Black, COIL ON PLUG, incl. spark plug connector									9.6326 C10		
CORRADO												
1.8 16V	Petrol	100	04/89-07/92	**KR**								
All engines	version Bosch						2.7530/36PHT	3.7573/21RS	8.2723			
All engines										9.6026 C10	9.4007	
1.8 G60	Petrol	118	09/88-09/93	**PG**								
All engines	version Bosch						2.7530/36PHT	3.7573/21RS				
All engines										9.6025 C10	9.4007	4.8725

A10	CONDENSER	**A20**	CONTACT SET	**A40**	DISTRIBUTOR CAP	**A50**	ROTOR	**A70**	PICK-UP
C10	COIL	**C20**	IGNITION MODULE	**C30**	ELECTRONIC IGNITION KIT	**E01**	IGNITION CABLE SET		

The present application list is a brief version. For the detailed information about the possibility of installation on a specific vehicle, please refer to our web-catalogue http://catalogo.facet.eu/

Vehicle	alim.	kW	Date	Engine	FUNCTIONS ON THE VEHICLE: A10	A20	A40	A50	A70	C10 - C30	C20	E01
2.0 i	Petrol	85	04/93-12/95	**2E, ADY**								
All engines	version Bosch					2.7530/36PHT	3.7573/21RS					
All engines										9.8114 C30		
Eng. ADY											9.4007	4.8725
Eng. 2E												4.8965
2.0 i 16V	Petrol	100	08/91-12/95	**7TZ220XS560**								
All engines	version Bosch					2.7530/36PHT	3.7573/21RS	8.2723				
All engines											9.4007	
2.9 VR6	Petrol	140	08/91-12/95	**ABV**								
All engines	version Bosch						2.7530/3PHT					
All engines	->ch. 50-N-018 000, version Bosch							3.7573/48RS				
All engines	ch. 50-N-018 001 ->, version Bosch							3.7573/49RS				
All engines	->ch. 50-P-010 000									9.6169 C10		
All engines											9.4007	
DERBY												
1.0	Petrol	29	10/81-12/84	**GL**								
All engines	version Bosch				0.0179/96	1.2549HDVS	2.7479PHT	3.7573/14RS				
1.1	Petrol	37	02/77-09/81	**HB**								
All engines	version Bosch				0.0179/95	1.2549HDVS	2.7479PHT	3.7526RS				
All engines	version Ducellier							3.7689RS				
1.3	Petrol	40	08/83-12/84	**HK**								
All engines	version Bosch						2.7494PHT	3.7556RS	8.2693			
All engines										9.6025 C10	9.4004	
1.3	Petrol	44	02/77-09/81	**HH**								
All engines	version Bosch				0.0179/95	1.2549HDVS	2.7479PHT					
All engines	version Bosch, ->year 01/01/83							3.7526RS				
All engines	version Bosch, 01/01/83 ->							3.7573/14RS				
All engines	version Ducellier							3.7689RS				
1.3	Petrol	55	09/82-12/84	**GK**								
All engines	version Bosch						2.7494PHT	3.7573/21RS	8.2723			
All engines										9.6025 C10	9.4004	
EOS												
1.4 TSI	Petrol	118	05/08-08/15	**CAVD, CTHD**								
All engines	x 4, COIL ON PLUG, incl. spark plug connector									9.6374 C10		
1.4 TSI	Petrol	90	11/07-08/15	**CAXA**								
All engines	x 4, COIL ON PLUG, incl. spark plug connector									9.6374 C10		
1.6 FSI	Petrol	85	06/06-05/08	**BLF**								
All engines	x 4, COIL ON PLUG, incl. spark plug connector									9.6374 C10		

A10	CONDENSER	**A20**	CONTACT SET	**A40**	DISTRIBUTOR CAP	**A50**	ROTOR	**A70**	PICK-UP
C10	COIL	**C20**	IGNITION MODULE	**C30**	ELECTRONIC IGNITION KIT	**E01**	IGNITION CABLE SET		

The present application list is a brief version. For the detailed information about the possibility of installation on a specific vehicle, please refer to our web-catalogue http://catalogo.facet.eu/

Vehicle	alim.	kW	Date	Engine	FUNCTIONS ON THE VEHICLE A10	A20	A40	A50	A70	C10 - C30	C20	E01
2.0 FSI	Petrol	110	03/06-05/08	**BVY, BVZ**						9.6326 C10		
All engines				x 4, ELDOR, Housing Colour:Black, COIL ON PLUG, incl. spark plug connector								
2.0 TFSI	Petrol	147	03/06-08/15	**BPY, BWA, CAWB, CBFA, CCTA, CCZA**								
All engines				01/06/08 ->, x 4, ELDOR, Housing Colour:Black, COIL ON PLUG, incl. spark plug connector						9.6326 C10		
All engines				->year 01/05/08, x 4, COIL ON PLUG, incl. spark plug connector						9.6374 C10		
2.0 TSI	Petrol	155	11/09-08/15	**CCZB**								
All engines				x 4, ELDOR, Housing Colour:Black, COIL ON PLUG, incl. spark plug connector						9.6326 C10		
3.2 V6	Petrol	184	06/06-05/09	**BUB, CBRA**								
All engines				x 6, COIL ON PLUG, incl. spark plug connector						9.6334 C10		
FOX												
1.0	Petrol	52	10/03->	--								
All engines										9.8120 C30		4.9723
1.0	Petrol	53	10/03->	**AQZ, BNX**								
All engines										9.8120 C30		4.9723
1.0	Petrol	54	04/08->	**CCNA**								
All engines				->year 27/07/09						9.8120 C30		4.9723
1.0 Alcohol	Petrol	53	10/03->	**BJE, BNX**								
All engines										9.8120 C30		4.9723
1.0 Total Flex	Flexfuel	54	03/08->	**CCNA**								
All engines				->year 27/07/09						9.8120 C30		4.9723
1.2	Petrol	40	04/05-07/11	**BMD, CHFB**								
All engines				x 3, COIL ON PLUG, incl. spark plug connector						9.6331 C10		
1.2	Petrol	44	09/10-12/11	**CHFA**								
All engines				x 3, COIL ON PLUG, incl. spark plug connector						9.6331 C10		
1.4	Petrol	55	04/05-12/09	**BKR**								
All engines										9.8120 C30		4.9723
1.6	Petrol	74	10/03-08/14	**BAH, BLH, BPA, CCRA, CFZA**								
All engines										9.8120 C30		4.9723
1.6 Alcohol	Petrol	76	10/03->	--								
All engines										9.8120 C30		4.9723

A10	CONDENSER	**A20**	CONTACT SET	**A40**	DISTRIBUTOR CAP	**A50**	ROTOR	**A70**	PICK-UP
C10	COIL	**C20**	IGNITION MODULE	**C30**	ELECTRONIC IGNITION KIT	**E01**	IGNITION CABLE SET		

The present application list is a brief version. For the detailed information about the possibility of installation on a specific vehicle, please refer to our web-catalogue http://catalogo.facet.eu/

Vehicle	alim.	kW	Date	Engine	FUNCTIONS ON THE VEHICLE A10	A20	A40	A50	A70	C10 - C30	C20	E01
1.6 Total Flex	Petrol/ Ethanol	74	10/03-08/14	ENGINE BJA, BPA, CCRA								

Engine	Information	A10	A20	A40	A50	A70	C10 - C30		C20	E01
All engines							9.8120	C30		4.9723

GOLF I

1.3	Petrol	40	08/83-07/86	ENGINE HK

Engine	Information	A10	A20	A40	A50	A70	C10 - C30		C20	E01
All engines	version Bosch	0.0179/95	1.2549HDVS		3.7573/14RS					
All engines	->ch. 15-E-027 000, version Bosch			2.7479PHT						
All engines	ch. 15-E-027 001 ->, version Bosch			2.7494PHT						
All engines	->ch. 15-E-027 000									4.8727

1.6	Petrol	55	08/83-04/92	ENGINE EW, HN

Engine	Information	A10	A20	A40	A50	A70	C10 - C30		C20	E01
All engines	version Bosch, ->eng. 012 000, ->eng. 005 000			2.7479PHT						
All engines	version Bosch, eng. type 012 001 ->, ->eng. 035 000, eng. type 005 001 ->, ->eng. 007 000			2.7494PHT						
All engines	version Bosch, eng. type 035 001 ->, eng. type 007 001 ->			2.7530/36PHT						
Eng. EW	version Ducellier, eng. type 012 001 ->			2.7668PHT	3.7699RS					
All engines	version Bosch, eng. type 007 001 ->				3.7555RS					
All engines	version Bosch, distr. num. 026 905 206 AD, eng. type 024 001 ->, ->eng. 025 000, ->eng. 005 000					8.2719				
All engines	ch. 15-E-027 001 ->, ->ch. 15-J-035 000, ch. 15-L-000 001 ->						9.6025	C10		
All engines	ch. 15-K-000 001 ->, ->ch. 15-K-035 000						9.6026	C10		
All engines	->ch. 15-E-027 000						9.6032	C10		4.8727
All engines									9.4007	
All engines	ch. 15-E-027 001 ->									4.8725

1.8	Petrol	66	08/83-09/92	ENGINE EX

Engine	Information	A10	A20	A40	A50	A70	C10 - C30		C20	E01
All engines	version Bosch, ->eng. 015 000			2.7479PHT						
All engines	version Bosch, eng. type 015 001 ->, ->eng. 035 000			2.7494PHT						
All engines	version Bosch, eng. type 035 001 ->			2.7530/36PHT						
All engines	version Ducellier			2.7668PHT	3.7699RS					
All engines	version Bosch				3.7555RS	8.2719				
All engines	ch. 15-E-027 001 ->, ->ch. 15-J-035 000, ch. 15-L-000 001 ->						9.6025	C10		
All engines	ch. 15-K-000 001 ->, ->ch. 15-K-035 000						9.6026	C10		
All engines	->ch. 15-E-027 000						9.6032	C10		4.8727
All engines									9.4007	
All engines	ch. 15-E-027 001 ->									4.8725

1.8	Petrol	70	08/83-04/93	ENGINE JH

Engine	Information	A10	A20	A40	A50	A70	C10 - C30		C20	E01
All engines	version Bosch, ->eng. 140 000			2.7479PHT	3.7555RS					
All engines	version Bosch, eng. type 140 001 ->, ->eng. 280 000			2.7494PHT						
All engines	version Bosch, eng. type 280 001 ->			2.7530/36PHT						
All engines	version Bosch, ->eng. 140 000, eng. type 280 001 ->					8.2719				
All engines	ch. 15-E-027 001 ->, ->ch. 15-J-035 000, ch. 15-L-000 001 ->						9.6025	C10		
All engines	ch. 15-K-000 001 ->, ->ch. 15-K-035 000						9.6026	C10		
All engines	->ch. 15-E-027 000						9.6032	C10		4.8727
All engines									9.4007	
All engines	ch. 15-E-027 001 ->									4.8725

1.8	Petrol	72	08/89-03/93	ENGINE 2H

Engine	Information	A10	A20	A40	A50	A70	C10 - C30		C20	E01
All engines	version Bosch, ch. 15-L-012 001 ->, ->ch. 15-M-021 000			2.7494PHT						
All engines	version Bosch, ->ch. 15-L-012 000, ch. 15-M-021 001 ->			2.7530/36PHT						
All engines	version Bosch				3.7573/21RS					
All engines	ch. 15-E-027 001 ->, ->ch. 15-J-035 000, ch. 15-L-000 001 ->						9.6025	C10		
All engines	ch. 15-K-000 001 ->, ->ch. 15-K-035 000						9.6026	C10		

A10	CONDENSER	A20	CONTACT SET	A40	DISTRIBUTOR CAP	A50	ROTOR	A70	PICK-UP
C10	COIL	C20	IGNITION MODULE	C30	ELECTRONIC IGNITION KIT	E01	IGNITION CABLE SET		

The present application list is a brief version. For the detailed information about the possibility of installation on a specific vehicle, please refer to our web-catalogue http://catalogo.facet.eu/

Vehicle	alim.	kW	Date	Engine	FUNCTIONS ON THE VEHICLE A10	A20	A40	A50	A70	C10 - C30	C20	E01

1.8	Petrol	72	08/89-03/93	ENGINE 2H

Engine	Information	A10	A20	A40	A50	A70	C10 - C30		C20	E01
All engines	->ch. 15-E-027 000						9.6032	C10		4.8727
All engines									9.4007	
All engines	ch. 15-E-027 001 ->									4.8725

1.8	Petrol	82	08/82-12/92	ENGINE DX, KT

Engine	Information	A10	A20	A40	A50	A70	C10 - C30		C20	E01
Eng. DX	version Bosch, ->eng. 110 000			2.7479PHT						
All engines	version Bosch, eng. type 110 001 ->, ->eng. 119 000, ->eng. 004 600			2.7494PHT	3.7573/16RS					
All engines	version Bosch, eng. type 119 001 ->, eng. type 004 601 ->			2.7530/36PHT						
All engines	version Bosch, ->eng. 110 000, eng. type 119 001 ->, eng. type 004 601 ->				3.7555RS					
All engines	version Bosch, eng. type 130 001 ->					8.2719				
All engines	ch. 15-E-027 001 ->, ->ch. 15-J-035 000, ch. 15-L-000 001 ->						9.6025	C10		
All engines	ch. 15-K-000 001 ->, ->ch. 15-K-035 000						9.6026	C10		
All engines	->ch. 15-E-027 000						9.6032	C10		4.8727
All engines									9.4007	
All engines	ch. 15-E-027 001 ->									4.8725

GOLF II

1.0	Petrol	33	11/83-08/85	ENGINE GN

Engine	Information	A10	A20	A40	A50	A70	C10 - C30		C20	E01
All engines	version Bosch, no specific info conc. application available	0.0179/95, 0.0179/96								
All engines	version Bosch		1.2549HDVS		3.7573/14RS					
All engines	version Bosch, ->ch. 19-E-855 000			2.7479PHT						
All engines	version Bosch, ch. 19-E-855 001 ->			2.7494PHT						
All engines	ch. 19-E-855 001 ->									4.8725
All engines	->ch. 19-E-855 000									4.8727

1.0	Petrol	37	08/85-10/91	ENGINE HZ

Engine	Information	A10	A20	A40	A50	A70	C10 - C30		C20	E01
All engines	version Bosch, 01/09/86 ->, ->ch. 1G-MB150 000, ->ch. 1G-MW480 000			2.7494PHT						
All engines	version Bosch, ch. 1G-MB150 001 ->, ch. 1G-MW480 001 ->			2.7530/36PHT		8.2734				
All engines	version Bosch, 01/09/86 ->				3.7556RS					
All engines	version Bosch, ->ch. 1G-MB150 000, ->ch. 1G-MW480 000					8.2693				
All engines	no specific info conc. application available						9.6025, 9.6026	C10		
All engines									9.4007	
All engines	01/08/88 ->, ch. 19-E-855 001 ->									4.8493
All engines	01/08/86 ->, ->year 01/08/88									4.9671

1.3	Petrol	37	08/85-12/87	ENGINE NU

Engine	Information	A10	A20	A40	A50	A70	C10 - C30		C20	E01
All engines	version Bosch, 01/08/86 ->			2.7494PHT	3.7556RS					
All engines	version Bosch					8.2693				
All engines							9.6025	C10		4.9671

1.3	Petrol	40	08/83-06/87	ENGINE HK, MH

Engine	Information	A10	A20	A40	A50	A70	C10 - C30		C20	E01
Eng. HK	version Bosch	0.0179/95	1.2549HDVS		3.7573/14RS					
Eng. HK	version Bosch, ->ch. 19-E-855 000			2.7479PHT						
All engines	version Bosch, ch. 19-E-855 001 ->, 01/08/86 ->			2.7494PHT						
Eng. MH	version Bosch, 01/08/86 ->				3.7556RS					
Eng. MH	version Bosch					8.2693				
Eng. MH	->year 31/07/87						9.6025	C10		
Eng. MH	01/08/87 ->						9.6026	C10		
Eng. MH									9.4007	
All engines	ch. 19-E-855 001 ->, ->year 31/07/86, 01/08/88 ->									4.8493
Eng. HK	->ch. 19-E-855 000									4.8727
Eng. MH	01/08/86 ->, ->year 31/07/88									4.9671

A10	CONDENSER	A20	CONTACT SET	A40	DISTRIBUTOR CAP	A50	ROTOR	A70	PICK-UP
C10	COIL	C20	IGNITION MODULE	C30	ELECTRONIC IGNITION KIT	E01	IGNITION CABLE SET		

The present application list is a brief version. For the detailed information about the possibility of installation on a specific vehicle, please refer to our web-catalogue http://catalogo.facet.eu/

Vehicle	alim.	kW	Date	Engine	FUNCTIONS ON THE VEHICLE A10	A20	A40	A50	A70	C10 - C30	C20	E01
1.3	Petrol	43	08/83-10/86	ENGINE GT								

Engine	Information	A10	A20	A40	A50	A70	C10 - C30	C20	E01
All engines	version Bosch	0.0179/95	1.2549HDVS		3.7556RS				
All engines	version Bosch, ->ch. 19-E-855 000			2.7479PHT					
All engines	version Bosch, ch. 19-E-855 001 ->			2.7494PHT					
All engines	ch. 19-E-855 001 ->								4.8493
All engines	->ch. 19-E-855 000								4.8727

1.3 Cat	Petrol	40	06/86-12/92	ENGINE 2G, NZ

Engine	Information	A10	A20	A40	A50	A70	C10 - C30	C20	E01
All engines	01/01/87 ->, ->ch. 1G-MB150 000, ->ch. 1G-MW480 000, version Bosch, ->ch. 1G-MB150 000			2.7494PHT					
All engines	ch. 1G-MB150 001 ->, ch. 1G-MW480 001 ->, version Bosch			2.7530/36PHT					
All engines	version Bosch				3.7556RS				
All engines	->ch. 1G-MB150 000, ->ch. 1G-MW480 000, version Bosch, distr. num. 030 905 205 D					8.2693			
All engines	ch. 1G-MB150 001 ->, ch. 1G-MW480 001 ->, version Bosch, distr. num. 030 805 205 S					8.2734			
All engines	no specific info conc. application available						9.6025, 9.6026 C10		4.8493
All engines								9.4007	
Eng. NZ	no specific info conc. application available								4.9671

1.6	Petrol	51	10/86-12/92	ENGINE PN

Engine	Information	A10	A20	A40	A50	A70	C10 - C30	C20	E01
All engines	version Bosch			2.7530/36PHT	3.7555RS				
All engines	version Ducellier			2.7668PHT	3.7699RS				
All engines	version Bosch, ->year 31/07/86					8.2659			
All engines	version Bosch, 01/08/86 ->					8.2719			
All engines	no specific info conc. application available						9.6025, 9.6026 C10		
All engines								9.4007	4.8725

1.6	Petrol	53	02/86-10/91	ENGINE RF

Engine	Information	A10	A20	A40	A50	A70	C10 - C30	C20	E01
All engines	version Bosch			2.7530/36PHT	3.7555RS	8.2719			
All engines	version Ducellier			2.7668PHT	3.7699RS				
All engines	no specific info conc. application available						9.6025, 9.6026 C10		
All engines								9.4007	4.8725

1.6	Petrol	55	08/83-07/92	ENGINE ABN, EZ

Engine	Information	A10	A20	A40	A50	A70	C10 - C30	C20	E01
Eng. EZ	version Bosch, ->eng. 309 582	0.0179/96	1.2534HDVS						
Eng. EZ	version Bosch, distr. num. 050 905 205 C, eng. type 185 001 ->, ->year 01/07/86			2.7494PHT					
All engines	version Bosch			2.7530/36PHT					
All engines	version Ducellier, 01/08/85 ->			2.7668PHT	3.7699RS				
Eng. EZ	version Bosch, eng. type 185 001 ->, ->eng. 309 582				3.7525RS				
All engines	version Bosch, distr. num. 026 905 206, distr. num. 050 905 205, distr. num. 050 905 205 C, ->eng. 185 000, eng. type 309 583 ->				3.7555RS				
All engines	version Bosch, distr. num. 050 905 205 C, eng. type 309 583 ->					8.2719			
All engines	no specific info conc. application available						9.6025 C10		
Eng. EZ	no specific info conc. application available						9.6026 C10		
All engines								9.4007	
All engines	ch. 19-E-855 001 ->								4.8725
Eng. EZ	->ch. 19-E-855 000								4.8727

1.6 [CHE] [SWE]	Petrol	60	08/83-07/88	ENGINE HM

Engine	Information	A10	A20	A40	A50	A70	C10 - C30	C20	E01
All engines	version Bosch, ->eng. 033 000	0.0179/96	1.2534HDVS						
All engines	version Bosch, ->eng. 016 000			2.7479PHT					
All engines	version Bosch, eng. type 016 001 ->, ->year 01/07/86			2.7494PHT					
All engines	version Bosch, 01/08/86 ->			2.7530/36PHT					
All engines	version Bosch, eng. type 016 001 ->, ->eng. 033 000				3.7525RS				
All engines	version Bosch, ->eng. 016 000, eng. type 033 001 ->, ->year 31/07/85, 01/08/86 ->				3.7555RS				
All engines	version Bosch, eng. type 033 001 ->					8.2719			

A10	CONDENSER	A20	CONTACT SET	A40	DISTRIBUTOR CAP	A50	ROTOR	A70	PICK-UP
C10	COIL	C20	IGNITION MODULE	C30	ELECTRONIC IGNITION KIT	E01	IGNITION CABLE SET		

The present application list is a brief version. For the detailed information about the possibility of installation on a specific vehicle, please refer to our web-catalogue http://catalogo.facet.eu/

Vehicle	alim.	kW	Date	Engine	FUNCTIONS ON THE VEHICLE A10	A20	A40	A50	A70	C10 - C30	C20	E01
1.6 [CHE] [SWE]	Petrol	60	08/83-07/88	ENGINE HM								

Engine	Information	A10	A20	A40	A50	A70	C10 - C30	C20	E01
All engines	ch. 19-F-350 000 ->						9.6025 C10		
All engines								9.4007	
All engines	ch. 19-E-855 001 ->								4.8725
All engines	->ch. 19-E-855 000								4.8727

1.6 G	Petrol	51	08/86-07/91	ENGINE EZA, PN

Engine	Information	A10	A20	A40	A50	A70	C10 - C30	C20	E01
All engines	version Bosch			2.7530/36PHT	3.7555RS				
All engines	version Ducellier			2.7668PHT	3.7699RS				
Eng. PN	version Bosch, ->year 31/07/86					8.2659			
All engines	version Bosch, 01/08/86 ->					8.2719			
All engines	no specific info conc. application available						9.6025 C10		
Eng. PN	no specific info conc. application available						9.6026 C10		
All engines								9.4007	4.8725

1.8	Petrol	62	08/86-01/90	ENGINE RH

Engine	Information	A10	A20	A40	A50	A70	C10 - C30	C20	E01
All engines	version Bosch			2.7494PHT	3.7555RS	8.2719			
All engines							9.6025 C10	9.4007	4.8725

1.8	Petrol	66	08/84-10/91	ENGINE GU, GX

Engine	Information	A10	A20	A40	A50	A70	C10 - C30	C20	E01
Eng. GU	version Bosch, ->eng. 003 200			2.7479PHT					
All engines	version Bosch, eng. type 003 201 ->, ->eng. 31/07/87, ->year 31/07/86			2.7494PHT					
All engines	version Bosch, 01/08/87 ->, 01/08/86 ->			2.7530/36PHT					
Eng. GU	version Ducellier, 01/08/85 ->			2.7668PHT	3.7699RS				
All engines	version Bosch				3.7555RS	8.2719			
All engines	ch. 19-E-855 001 ->						9.6025 C10		4.8725
Eng. GU	01/08/88 ->, ->year 31/07/89						9.6026 C10		
All engines	->ch. 19-E-855 000						9.6032 C10		4.8727
All engines								9.4007	

1.8	Petrol	77	08/87-10/91	ENGINE RV

Engine	Information	A10	A20	A40	A50	A70	C10 - C30	C20	E01
All engines	version Bosch, ch. 1G-LB100 001 ->, ch. 1G-LW320 001 ->, ->ch. 1G-MB150 000, ->ch. 1G-MW480 000			2.7494PHT					
All engines	version Bosch, ->ch. 1G-LB100 000, ->ch. 1G-LW320 000, ch. 1G-MB150 001 ->, ch. 1G-MW480 001 ->			2.7530/36PHT					
All engines	version Bosch				3.7573/21RS				
All engines							9.6025 C10	9.4007	4.8725

1.8 [CHE] [SWE]	Petrol	66	04/84-07/87	ENGINE HV

Engine	Information	A10	A20	A40	A50	A70	C10 - C30	C20	E01
All engines	version Bosch, 01/08/86 ->, ->year 31/07/87			2.7530/36PHT					
All engines	version Bosch, 01/08/86 ->				3.7555RS	8.2719			
All engines	version Bosch, ->year 31/07/86					8.2659			
All engines	ch. 19-E-855 001 ->						9.6025 C10		4.8725
All engines	->ch. 19-E-855 000						9.6032 C10		4.8727
All engines								9.4007	

1.8 GTI	Petrol	79	08/85-10/87	ENGINE RD

Engine	Information	A10	A20	A40	A50	A70	C10 - C30	C20	E01
All engines	version Bosch			2.7530/36PHT	3.7573/21RS				
All engines							9.6025 C10	9.4007	4.8725

1.8 GTI	Petrol	82	08/83-10/91	ENGINE EV, PB

Engine	Information	A10	A20	A40	A50	A70	C10 - C30	C20	E01
Eng. EV	version Bosch, ->eng. 025 000			2.7479PHT					
All engines	version Bosch, eng. type 025 001 ->, ->year 31/07/86, ch. 1G-LB100 001 ->, ch. 1G-LW320 001 ->, ->ch. 1G-MB150 000, ->ch. 1G-MW480 000			2.7494PHT					

A10	CONDENSER	A20	CONTACT SET	A40	DISTRIBUTOR CAP	A50	ROTOR	A70	PICK-UP
C10	COIL	C20	IGNITION MODULE	C30	ELECTRONIC IGNITION KIT	E01	IGNITION CABLE SET		

The present application list is a brief version. For the detailed information about the possibility of installation on a specific vehicle, please refer to our web-catalogue http://catalogo.facet.eu/

Vehicle	alim.	kW	Date	Engine	FUNCTIONS ON THE VEHICLE: A10	A20	A40	A50	A70	C10 - C30	C20	E01
1.8 GTI	Petrol	82	08/83-10/91	EV, PB								

Engine	Information	A10	A20	A40	A50	A70	C10 - C30		C20	E01
All engines	version Bosch, 01/08/86 ->, ->ch. 1G-LB100 000, ->ch. 1G-LW320 000, ch. 1G-MB150 001 ->, ch. 1G-MW480 001 ->			2.7530/36PHT						
Eng. EV	version Bosch, 01/08/85 ->				3.7555RS					
Eng. EV	version Bosch, ->year 31/07/85				3.7573/16RS					
Eng. PB	version Bosch				3.7573/21RS					
Eng. EV	version Bosch					8.2719				
All engines	ch. 19-E-855 001 ->						9.6025	C10		4.8725
Eng. EV	->ch. 19-E-855 000						9.6032	C10		4.8727
All engines									9.4007	

1.8 GTI 16V	Petrol	102	02/86-06/90	KR

Engine	Information	A10	A20	A40	A50	A70	C10 - C30		C20	E01
All engines	version Bosch			2.7530/36PHT	3.7573/21RS	8.2723				
All engines							9.6025	C10	9.4007	
All engines	->year 31/07/89									4.8737

1.8 GTI 16V	Petrol	95	02/86-10/91	PL

Engine	Information	A10	A20	A40	A50	A70	C10 - C30		C20	E01
All engines	version Bosch			2.7530/36PHT	3.7573/21RS	8.2723				
All engines	no specific info conc. application available						9.6025, 9.6026	C10		
All engines									9.4007	
All engines	->year 31/07/89									4.8737

1.8 GTI Cat	Petrol	79	01/87-10/91	PF

Engine	Information	A10	A20	A40	A50	A70	C10 - C30		C20	E01
All engines	version Bosch, ch. 1G-LB100 001 ->, ch. 1G-LW320 001 ->, ->ch. 1G-MB150 000, ->ch. 1G-MW480 000			2.7494PHT						
All engines	version Bosch, ->ch. 1G-LB100 000, ->ch. 1G-LW320 000, ch. 1G-MB150 001 ->, ch. 1G-MW480 001 ->			2.7530/36PHT						
All engines	version Bosch				3.7573/21RS					
All engines							9.6025	C10	9.4007	4.8725

1.8 GTI G60	Petrol	118	04/90-07/91	PG

Engine	Information	A10	A20	A40	A50	A70	C10 - C30		C20	E01
All engines	version Bosch, ->ch. 1G-MB150 000, ->ch. 1G-MW480 000			2.7494PHT						
All engines	version Bosch, ch. 1G-MB150 001 ->, ch. 1G-MW480 001 ->			2.7530/36PHT						
All engines	version Bosch				3.7573/21RS					
All engines							9.6025	C10	9.4007	4.8725

1.8 GTI G60 Syncro	Petrol	118	08/88-12/91	1H, PG

Engine	Information	A10	A20	A40	A50	A70	C10 - C30		C20	E01
All engines	version Bosch, ->ch. 1G-MB120 000, ->ch. 1G-MW480 000			2.7494PHT						
Eng. PG	version Bosch, ch. 1G-MB150 001 ->, ch. 1G-MW480 001 ->			2.7530/36PHT						
All engines	version Bosch				3.7573/21RS					
All engines							9.6025	C10	9.4007	4.8725

1.8 i	Petrol	66	08/87-07/91	RP

Engine	Information	A10	A20	A40	A50	A70	C10 - C30		C20	E01
All engines	version Bosch			2.7530/36PHT	3.7555RS	8.2719				
All engines							9.6025	C10	9.4007	4.8725

1.8 i Cat	Petrol	66	08/87-10/91	GX, RP

Engine	Information	A10	A20	A40	A50	A70	C10 - C30		C20	E01
Eng. GX	version Bosch, ->year 31/07/86			2.7494PHT						
All engines	version Bosch, 01/08/86 ->			2.7530/36PHT						
All engines	version Bosch				3.7555RS	8.2719				
All engines	ch. 19-E-855 001 ->						9.6025	C10		4.8725
Eng. GX	->ch. 19-E-855 000						9.6032	C10		4.8727
All engines									9.4007	

A10	CONDENSER	A20	CONTACT SET	A40	DISTRIBUTOR CAP	A50	ROTOR	A70	PICK-UP
C10	COIL	C20	IGNITION MODULE	C30	ELECTRONIC IGNITION KIT	E01	IGNITION CABLE SET		

The present application list is a brief version. For the detailed information about the possibility of installation on a specific vehicle, please refer to our web-catalogue http://catalogo.facet.eu/

Vehicle	alim.	kW	Date	Engine	FUNCTIONS ON THE VEHICLE A10	A20	A40	A50	A70	C10 - C30	C20	E01
1.8 i Cat Syncro	Petrol	66	08/87-10/91	**RP**								

Engine	Information	A10	A20	A40	A50	A70	C10 - C30	C20	E01
All engines	version Bosch			2.7530/36PHT	3.7555RS	8.2719			
All engines							9.6025 C10	9.4007	4.8725

Vehicle	alim.	kW	Date	Engine
1.8 Rallye syncro	Petrol	118	08/88-07/91	**1H, PG**

Engine	Information	A10	A20	A40	A50	A70	C10 - C30	C20	E01
All engines							9.6025 C10	9.4007	4.8725

Vehicle	alim.	kW	Date	Engine
1.8 Syncro	Petrol	62	08/87-07/88	**RH**

Engine	Information	A10	A20	A40	A50	A70	C10 - C30	C20	E01
All engines							9.6025 C10	9.4007	4.8725

Vehicle	alim.	kW	Date	Engine
1.8 Syncro	Petrol	66	02/86-07/91	**GU, GX**

Engine	Information	A10	A20	A40	A50	A70	C10 - C30	C20	E01
All engines	version Bosch, ->ch. 19-G-990 000			2.7494PHT					
Eng. GU	version Bosch, ch. ..-H-000 001 ->			2.7530/36PHT					
Eng. GU	version Ducellier			2.7668PHT	3.7699RS				
All engines	version Bosch				3.7555RS	8.2719			
All engines	->ch. 1G-J-990000, ch. 1G-L-000 001 ->						9.6025 C10		
Eng. GU	->ch. 1G-K-990 000, ch. 1G-K-000 001 ->						9.6026 C10		
All engines								9.4007	4.8725

Vehicle	alim.	kW	Date	Engine
1.8 Syncro	Petrol	72	08/88-07/91	**3E82**

Engine	Information	A10	A20	A40	A50	A70	C10 - C30	C20	E01
All engines	version Bosch			2.7530/36PHT	3.7573/21RS				
All engines	ch. 1G-L-000 001 ->						9.6025 C10		
All engines	->ch. 1G-K-990 000						9.6026 C10		
All engines								9.4007	4.8725

Vehicle	alim.	kW	Date	Engine
1.8i GTI [CHE] [SWE]	Petrol	82	01/84-07/87	**GZ**

Engine	Information	A10	A20	A40	A50	A70	C10 - C30	C20	E01
All engines	version Bosch, ->year 31/07/86			2.7494PHT					
All engines	version Bosch, 01/08/86 ->			2.7530/36PHT					
All engines	version Bosch, 01/08/85 ->				3.7555RS				
All engines	version Bosch, ->year 31/07/85				3.7573/16RS				
All engines	version Bosch					8.2719			
All engines	ch. 19-E-855 001 ->						9.6025 C10		4.8725
All engines	->ch. 19-E-855 000						9.6032 C10		4.8727
All engines								9.4007	

Vehicle	alim.	kW	Date	Engine
1.8i GTI [SWE]	Petrol	82	08/87-07/88	**GZ**

Engine	Information	A10	A20	A40	A50	A70	C10 - C30	C20	E01
All engines	version Bosch, 01/08/86 ->			2.7530/36PHT					
All engines	version Bosch, 01/08/85 ->				3.7555RS				
All engines	version Bosch					8.2719			
All engines	ch. 19-E-855 001 ->						9.6025 C10		4.8725
All engines	->ch. 19-E-855 000						9.6032 C10		4.8727
All engines								9.4007	

GOLF III

Vehicle	alim.	kW	Date	Engine
1.4	Petrol	40	11/91-04/99	**ABD, AEX**

Engine	Information	A10	A20	A40	A50	A70	C10 - C30	C20	E01
All engines	version Bosch, 01/08/94 ->			2.7494PHT					
Eng. ABD	version Bosch, ->year 31/07/94			2.7530/36PHT					
Eng. AEX	version Marelli			2.8216PHT	3.8257RS	8.4982			
All engines	version Bosch				3.7573/21RS	8.2723			
All engines							9.8114 C30		
Eng. ABD	ch. 1H-P-640 001 ->								4.8493
Eng. AEX									4.9671

A10	CONDENSER	**A20**	CONTACT SET	**A40**	DISTRIBUTOR CAP	**A50**	ROTOR	**A70**	PICK-UP
C10	COIL	**C20**	IGNITION MODULE	**C30**	ELECTRONIC IGNITION KIT	**E01**	IGNITION CABLE SET		

The present application list is a brief version. For the detailed information about the possibility of installation on a specific vehicle, please refer to our web-catalogue http://catalogo.facet.eu/

Vehicle	alim.	kW	Date	Engine	FUNCTIONS ON THE VEHICLE A10	A20	A40	A50	A70	C10 - C30	C20	E01

1.4 | Petrol | 44 | 10/91-04/99 | ENGINE: ABD, AEX

Engine	Information	A10	A20	A40	A50	A70	C10 - C30		C20	E01
All engines	version Bosch, 01/08/94 ->			2.7494PHT						
Eng. ABD	version Bosch, ->year 31/07/94			2.7530/36PHT						
Eng. AEX	version Marelli			2.8216PHT	3.8257RS	8.4982				
All engines	version Bosch				3.7573/21RS	8.2723				
All engines							9.8114	C30		
Eng. ABD	ch. 1H-P-640 001 ->									4.8493
Eng. AEX										4.9671

1.6 | Petrol | 55 | 09/92-08/97 | ENGINE: ABU, AEA, AEE

Engine	Information	A10	A20	A40	A50	A70	C10 - C30		C20	E01
All engines	version Bosch, 01/08/94 ->			2.7494PHT						
Eng. ABU	version Bosch, ->year 31/07/94			2.7530/36PHT						
Eng. AEE	version Marelli			2.8216PHT	3.8257RS	8.4982				
All engines	version Bosch				3.7573/21RS	8.2723				
All engines							9.8114	C30		
Eng. ABU	01/08/94 ->									4.8493
Eng. ABU, AEA	ch. 1H-P-640 001 ->, ->year 31/07/94									4.9364
Eng. AEE	no specific info conc. application available									4.9609

1.6 | Petrol | 74 | 07/94-04/99 | ENGINE: AEK, AFT, AKS

Engine	Information	A10	A20	A40	A50	A70	C10 - C30		C20	E01
All engines	version Bosch			2.7530/36PHT	3.7573/21RS	8.2723				
Eng. AEK	version Ducellier			2.7668PHT	3.7699RS					
All engines							9.8114	C30		
Eng. AEK										4.9551
Eng. AFT	->year 31/05/96									4.9933
Eng. AFT, AKS	01/06/96 ->									4.9937

1.8 | Petrol | 55 | 08/91-04/99 | ENGINE: AAM

Engine	Information	A10	A20	A40	A50	A70	C10 - C30		C20	E01
All engines	version Bosch			2.7530/36PHT	3.7573/21RS	8.2723				
All engines	version Ducellier			2.7668PHT	3.7699RS					
All engines							9.8114	C30		
All engines	->year 31/07/94									4.8725
All engines	convertible									4.8965
All engines	01/08/94 ->									4.9549

1.8 | Petrol | 66 | 08/91-04/99 | ENGINE: ABS, ACC, ADZ

Engine	Information	A10	A20	A40	A50	A70	C10 - C30		C20	E01
Eng. ABS, ADZ	version Bosch			2.7530/36PHT	3.7573/21RS	8.2723				
Eng. ABS, ADZ	version Ducellier			2.7668PHT	3.7699RS					
All engines							9.8114	C30		
Eng. ABS, ADZ	convertible									4.8725
Eng. ADZ										4.9549

1.8 Syncro | Petrol | 66 | 01/93-04/99 | ENGINE: ABS, ADZ

Engine	Information	A10	A20	A40	A50	A70	C10 - C30		C20	E01
All engines	version Bosch			2.7530/36PHT	3.7573/21RS					
All engines	version Ducellier			2.7668PHT	3.7699RS					
All engines							9.8114	C30		
Eng. ABS										4.8725
Eng. ADZ										4.9549

2.0 | Petrol | 79 | 08/95-04/96 | ENGINE: AEP

Engine	Information	A10	A20	A40	A50	A70	C10 - C30		C20	E01
All engines	version Bosch			2.7530/36PHT	3.7573/21RS	8.2723				
All engines	version Ducellier			2.7668PHT	3.7699RS					
All engines							9.8114	C30		4.9549

A10	CONDENSER	A20	CONTACT SET	A40	DISTRIBUTOR CAP	A50	ROTOR	A70	PICK-UP
C10	COIL	C20	IGNITION MODULE	C30	ELECTRONIC IGNITION KIT	E01	IGNITION CABLE SET		

The present application list is a brief version. For the detailed information about the possibility of installation on a specific vehicle, please refer to our web-catalogue http://catalogo.facet.eu/

Vehicle	alim.	kW	Date	Engine	FUNCTIONS ON THE VEHICLE A10	A20	A40	A50	A70	C10 - C30	C20	E01
2.0	Petrol	85	11/91-04/99	ENGINE 2E, ADY, AGG, AKR								
Engine	Information											
All engines	version Bosch						2.7530/36PHT	3.7573/21RS				
Eng. ADY, AGG, AKR	version Ducellier						2.7668PHT	3.7699RS				
Eng. ADY, AGG, AKR	version Bosch								8.2723			
All engines										9.8114 C30		
Eng. 2E												4.8965
Eng. ADY, AGG, AKR												4.9549
2.0 GL	Petrol	79	08/95-09/97	ENGINE AEP								
All engines	version Bosch						2.7530/36PHT	3.7573/21RS	8.2723			
All engines	version Ducellier						2.7668PHT	3.7699RS				
All engines										9.8114 C30		4.9549
2.0 GTI 16V	Petrol	110	08/92-08/97	ENGINE ABF								
All engines	version Bosch						2.7530/33PHT		8.2723			
All engines										9.8114 C30		
2.0 Syncro	Petrol	85	08/95-04/99	ENGINE AGG								
All engines	version Bosch						2.7530/36PHT	3.7573/21RS	8.2723			
All engines										9.8114 C30		4.9549
2.8 VR6	Petrol	120	08/95-09/97	ENGINE AAA								
All engines	version Bosch, ->ch. 1H-PB060 000, ->ch. 1H-PW480 000						2.7530/3PHT					
All engines	version Bosch, ->ch. 1H-NB060 000, ->ch. 1H-NW300 000							3.7573/48RS				
All engines	version Bosch, ch. 1H-NB060 001 ->, ch. 1H-NW300 000 ->, ->ch. 1H-PB060 000, ->ch. 1H-PW480 000							3.7573/49RS				
All engines	->ch. 1H-PB060 000, ->ch. 1H-PW480 000									9.6169 C10		
2.8 VR6	Petrol	128	01/92-08/97	ENGINE AAA								
All engines	version Bosch, ->ch. 1H-PB060 000, ->ch. 1H-PW480 000						2.7530/3PHT					
All engines	version Bosch, ->ch. 1H-NB060 000, ->ch. 1H-NW300 000							3.7573/48RS				
All engines	version Bosch, ch. 1H-NB060 001 ->, ch. 1H-NW300 000 ->, ->ch. 1H-PB060 000, ->ch. 1H-PW480 000							3.7573/49RS				
All engines	->ch. 1H-PB060 000, ->ch. 1H-PW480 000									9.6169 C10		
GOLF IV												
1.4	Petrol	55	05/00-06/06	ENGINE AXP, BCA								
Eng. BCA	x 4, COIL ON PLUG, incl. spark plug connector									9.6374 C10		
Eng. AXP										9.8120 C30		
1.4 16V	Petrol	55	10/97-06/06	ENGINE AHW, AKQ, APE, AXP, BCA								
Eng. BCA	x 4, COIL ON PLUG, incl. spark plug connector									9.6374 C10		
Eng. AHW, AKQ, APE, AXP										9.8120 C30		4.9575
1.6	Petrol	74	08/97-05/04	ENGINE AEH, AFT, AKL, AKS, APF								
Eng. AFT, AKS	version Bosch						2.7530/36PHT	3.7573/21RS	8.2723			
Eng. AFT, AKS										9.8114 C30		4.9932
Eng. AEH, AKL										9.8120 C30		
Eng. AEH, AKL, APF										9.8120 C30		
Eng. AEH, AKL	->ch. 1J-W-050 000											4.9479
Eng. AEH, AKL, APF	ch. 1J-W-050 001 ->											4.9484

A10	CONDENSER	A20	CONTACT SET	A40	DISTRIBUTOR CAP	A50	ROTOR	A70	PICK-UP
C10	COIL	C20	IGNITION MODULE	C30	ELECTRONIC IGNITION KIT	E01	IGNITION CABLE SET		

The present application list is a brief version. For the detailed information about the possibility of installation on a specific vehicle, please refer to our web-catalogue http://catalogo.facet.eu/

Vehicle	alim.	kW	Date	Engine	FUNCTIONS ON THE VEHICLE: A10	A20	A40	A50	A70	C10 - C30	C20	E01
1.6	Petrol	75	08/00-06/06	AVU, BFQ								
All engines										9.8120 C30		4.9585
1.6	Petrol	77	05/00-06/06	AUS, AZD, BCB								
Eng. AZD, BCB	x 4, COIL ON PLUG, incl. spark plug connector									9.6374 C10		
Eng. AUS										9.8120 C30		
1.6 16V	Petrol	77	02/00-06/06	ATN, AUS, AZD, BCB								
Eng. AZD, BCB	x 4, COIL ON PLUG, incl. spark plug connector									9.6374 C10		
Eng. ATN, AUS										9.8120 C30		4.9575
1.6 FSI	Petrol	81	01/02-06/06	BAD								
All engines	x 4, COIL ON PLUG, incl. spark plug connector									9.6374 C10		
1.6 FSI	Petrol	85	10/03-07/04	BAG								
All engines	Qty: 4									9.6374 C10		
1.8	Petrol	55	06/98-06/02	AAM, ANN								
All engines	version Bosch						2.7530/36PHT	3.7573/21RS				
All engines										9.8114 C30		4.9549
1.8	Petrol	66	06/98-06/02	ADZ, ANP								
All engines	version Bosch						2.7530/36PHT	3.7573/21RS				
Eng. ANP										9.8114 C30		4.9549
Eng. ADZ										9.8114 C30		
1.8	Petrol	92	08/97-06/05	AGN								
All engines										9.8120 C30		4.9489
1.8 4motion	Petrol	92	05/98-06/06	AGN								
All engines										9.8120 C30		4.9489
1.8 T	Petrol	110	08/97-06/06	AGU, ARZ, AUM								
Eng. AGU	x 4, COIL ON PLUG									9.6254S C10		
Eng. AUM	01/01/02 ->, x 4, COIL ON PLUG, incl. spark plug connector									9.6329 C10		
Eng. ARZ, AUM	->year 01/12/01, x 4, COIL ON PLUG, x 4, COIL ON PLUG, incl. spark plug connector, incl. spark plug connector									9.6345 C10		
Eng. AGU											9.4076	
1.8 T GTI	Petrol	132	08/01-06/05	AUQ								
All engines	01/01/02 ->, x 4, COIL ON PLUG, incl. spark plug connector									9.6329 C10		
All engines	->year 01/12/01, x 4, COIL ON PLUG, incl. spark plug connector									9.6345 C10		
2.0	Petrol	85	06/98-06/06	AGG, AKR, APK, AQY, ATU, AWF, AWG, AZG, AZJ								
Eng. AGG, AKR, ATU, AWF, AWG	version Bosch						2.7530/36PHT	3.7573/21RS				
Eng. AGG, AKR	version Ducellier						2.7668PHT	3.7699RS				

A10	CONDENSER	A20	CONTACT SET	A40	DISTRIBUTOR CAP	A50	ROTOR	A70	PICK-UP
C10	COIL	C20	IGNITION MODULE	C30	ELECTRONIC IGNITION KIT	E01	IGNITION CABLE SET		

The present application list is a brief version. For the detailed information about the possibility of installation on a specific vehicle, please refer to our web-catalogue http://catalogo.facet.eu/

Vehicle	alim.	kW	Date	Engine	FUNCTIONS ON THE VEHICLE A10	A20	A40	A50	A70	C10 - C30	C20	E01
2.0	Petrol	85	06/98-06/06	**AGG, AKR, APK, AQY, ATU, AWF, AWG, AZG, AZJ**								

Engine	Information	A10	A20	A40	A50	A70	C10 - C30		C20	E01
Eng. AGG, AKR, AWF, AWG	version Bosch					8.2723				
Eng. AGG, AKR, ATU, AWF, AWG							9.8114	C30		
Eng. APK, AQY							9.8120	C30		4.9585
Eng. AZG, AZJ										4.7223

2.0 4motion	Petrol	85	10/00-06/06	**AZH, AZJ**

Engine	Information	A10	A20	A40	A50	A70	C10 - C30		C20	E01
Eng. AZH							9.8120	C30		4.9585
Eng. AZJ										4.7223

2.0 Bi-Fuel	Petrol/ Compressed Natural Gas (CNG)	85	02/02-06/06	**BEH**

Engine	Information	A10	A20	A40	A50	A70	C10 - C30		C20	E01
All engines										4.7223

2.3 V5	Petrol	110	08/97-06/06	**AGZ**

Engine	Information	A10	A20	A40	A50	A70	C10 - C30		C20	E01
All engines									9.4074	

2.3 V5	Petrol	125	10/00-06/06	**AQN**

Engine	Information	A10	A20	A40	A50	A70	C10 - C30		C20	E01
All engines	x 5, COIL ON PLUG						9.6335	C10		

2.3 V5 4motion	Petrol	110	12/98-06/06	**AGZ**

Engine	Information	A10	A20	A40	A50	A70	C10 - C30		C20	E01
All engines									9.4074	

2.3 V5 4motion	Petrol	125	10/00-06/06	**AQN**

Engine	Information	A10	A20	A40	A50	A70	C10 - C30		C20	E01
All engines	x 5, COIL ON PLUG						9.6335	C10		

2.8 V6 4motion	Petrol	150	05/99-06/06	**AUE, BDE**

Engine	Information	A10	A20	A40	A50	A70	C10 - C30		C20	E01
All engines	01/05/01 ->, x 6, ch. 1J2000001 ->, COIL ON PLUG, x 6, COIL ON PLUG						9.6335	C10		

2.8 VR6 4motion	Petrol	150	03/99-06/05	**AUE, BDE**

Engine	Information	A10	A20	A40	A50	A70	C10 - C30		C20	E01
All engines	01/05/01 ->, x 6, ch. 1J2000001 ->, COIL ON PLUG, x 6, COIL ON PLUG						9.6335	C10		

3.2 R32 4motion	Petrol	177	09/02-06/05	**BFH, BML**

Engine	Information	A10	A20	A40	A50	A70	C10 - C30		C20	E01
All engines	x 6, COIL ON PLUG						9.6334	C10		

GOLF PLUS

1.2 TSi	Petrol	77	11/09-08/14	**CBZB**

Engine	Information	A10	A20	A40	A50	A70	C10 - C30		C20	E01
All engines							9.8120	C30		

1.4 TSi	Petrol	118	01/09-09/12	**CAVD**

Engine	Information	A10	A20	A40	A50	A70	C10 - C30		C20	E01
All engines	x 4, COIL ON PLUG, incl. spark plug connector						9.6374	C10		

A10	CONDENSER	**A20**	CONTACT SET	**A40**	DISTRIBUTOR CAP	**A50**	ROTOR	**A70**	PICK-UP
C10	COIL	**C20**	IGNITION MODULE	**C30**	ELECTRONIC IGNITION KIT	**E01**	IGNITION CABLE SET		

The present application list is a brief version. For the detailed information about the possibility of installation on a specific vehicle, please refer to our web-catalogue http://catalogo.facet.eu/

Vehicle	alim.	kW	Date	Engine	FUNCTIONS ON THE VEHICLE							
					A10	A20	A40	A50	A70	C10 - C30	C20	E01
1.4 TSi	Petrol	90	01/09-08/14	CAXA								
Engine: All engines — Information: x 4, COIL ON PLUG, incl. spark plug connector										9.6374 C10		
GOLF V												
1.2 TSI	Petrol	63	05/10-12/13	CBZA								
Engine: All engines										9.8120 C30		
1.2 TSI	Petrol	77	11/09-12/13	CBZB								
Engine: All engines										9.8120 C30		
1.4	Petrol	59	06/07-07/09	BUD								
Engine: All engines — Information: x 4, COIL ON PLUG, incl. spark plug connector										9.6374 C10		
1.4 16V	Petrol	55	10/03-11/06	BCA								
Engine: All engines — Information: x 4, COIL ON PLUG, incl. spark plug connector										9.6374 C10		
1.4 16V	Petrol	59	05/06-12/13	BUD, CGGA								
Engine: All engines — Information: x 4, COIL ON PLUG, incl. spark plug connector										9.6374 C10		
1.4 FSI	Petrol	66	10/03-11/06	BKG, BLN								
Engine: All engines — Information: x 4, COIL ON PLUG, incl. spark plug connector										9.6374 C10		
1.4 TSI	Petrol	103	05/06-07/09	BMY								
Engine: All engines — Information: x 4, COIL ON PLUG, incl. spark plug connector										9.6374 C10		
1.4 TSI	Petrol	118	06/08-12/13	CAVD, CNWA, CTHD								
Engine: All engines — Information: x 4, COIL ON PLUG, incl. spark plug connector										9.6374 C10		
1.4 TSI	Petrol	125	11/05-07/09	BLG								
Engine: All engines — Information: x 4, COIL ON PLUG, incl. spark plug connector										9.6374 C10		
1.4 TSI	Petrol	90	05/07-12/13	CAXA								
Engine: All engines — Information: x 4, COIL ON PLUG, incl. spark plug connector										9.6374 C10		
1.6	Natural Gas	75	11/08->	CHGA								
Engine: All engines — Information:										9.8120 C30		4.9585
Engine: All engines — Information:										9.8120 C30		
Engine: Eng. BGU — Information:										9.8120 C30		
Engine: Eng. BGU, BSE, BSF, CCSA — Information:												4.9585
1.6 BiFuel	Petrol/ Liquified Petro-leum Gas (LPG)	75	05/09-12/13	CHGA								
Engine: All engines — Information:										9.8120 C30		

A10	CONDENSER	A20	CONTACT SET	A40	DISTRIBUTOR CAP	A50	ROTOR	A70	PICK-UP
C10	COIL	C20	IGNITION MODULE	C30	ELECTRONIC IGNITION KIT	E01	IGNITION CABLE SET		

The present application list is a brief version. For the detailed information about the possibility of installation on a specific vehicle, please refer to our web-catalogue http://catalogo.facet.eu/

Vehicle	alim.	kW	Date	Engine	FUNCTIONS ON THE VEHICLE A10	A20	A40	A50	A70	C10 - C30	C20	E01
1.6 FSI	Petrol	85	10/03-07/08	**BAG, BLF, BLP**								
Engine: All engines — Information: x 4, COIL ON PLUG, incl. spark plug connector										9.6374 C10		
1.6 MultiFuel	Petrol/ Ethanol	75	10/07-12/13	**CCSA, CMXA**								
Engine: All engines										9.8120 C30		
Eng. CCSA												4.9585
2.0	Petrol	85	01/05-11/08	**BHY**								
Engine: All engines										9.8120 C30		4.9585
2.0 FSI	Petrol	110	01/04-11/08	**AXW, BLR, BLX, BLY, BVX, BVY, BVZ**								
Engine: All engines — Information: x 4, ELDOR, Housing Colour:Black, COIL ON PLUG, incl. spark plug connector										9.6326 C10		
2.0 FSI 4motion	Petrol	110	08/04-11/08	**BLX, BVX**								
Engine: All engines — Information: x 4, ELDOR, Housing Colour:Black, COIL ON PLUG, incl. spark plug connector										9.6326 C10		
2.0 GTI	Petrol	147	10/04-02/09	**AXX, BPY, BWA, CAWB, CBFA**								
Engine: All engines — Information: x 4, ELDOR, Housing Colour:Black, COIL ON PLUG, incl. spark plug connector										9.6326 C10		
2.0 GTI	Petrol	169	09/06-12/08	**BYD**								
Engine: All engines — Information: x 4, ELDOR, Housing Colour:Black, COIL ON PLUG, incl. spark plug connector										9.6326 C10		
2.0 TFSI	Petrol	147	06/07-07/09	**BWA, CAWB**								
Engine: All engines — Information: x 4, ELDOR, Housing Colour:Black, COIL ON PLUG, incl. spark plug connector										9.6326 C10		
2.5	Petrol	125	05/07-11/08	**CBTA, CBUA**								
Engine: All engines — Information: Qty: 5										9.6326 C10		
3.2 R32 4motion	Petrol	184	11/05-11/08	**BUB**								
Engine: All engines — Information: x 6, COIL ON PLUG										9.6334 C10		
GOLF VI												
1.2 TSI	Petrol	63	05/10->	**CBZA**								
Engine: All engines										9.8120 C30		4.7248
1.2 TSI	Petrol	77	11/08->	**CBZB**								
Engine: All engines										9.8120 C30		4.7248
1.2 TSI 16V	Petrol	77	11/13-05/16	**CJZA, CYVD**								
Engine: All engines — Information: x 4, BERU, ELDOR, COIL ON PLUG, incl. spark plug connector, Number of pins:4, incl. spark plug connector										9.6499 C10		

A10	CONDENSER	**A20**	CONTACT SET	**A40**	DISTRIBUTOR CAP	**A50**	ROTOR	**A70**	PICK-UP
C10	COIL	**C20**	IGNITION MODULE	**C30**	ELECTRONIC IGNITION KIT	**E01**	IGNITION CABLE SET		

The present application list is a brief version. For the detailed information about the possibility of installation on a specific vehicle, please refer to our web-catalogue http://catalogo.facet.eu/

Vehicle	alim.	kW	Date	Engine	FUNCTIONS ON THE VEHICLE							
					A10	A20	A40	A50	A70	C10 - C30	C20	E01
1.2 TSi BlueMotion	Petrol	77	05/09-11/12	ENGINE: **CBZB**								

Engine	Information	A10	A20	A40	A50	A70	C10 - C30		C20	E01
All engines							9.8120	C30		

1.4	Petrol	118	04/11-05/12	ENGINE: **CNWA**

Engine	Information	A10	A20	A40	A50	A70	C10 - C30		C20	E01
All engines	Qty: 4						9.6374	C10		

1.4	Petrol	59	10/08->	ENGINE: **BUD, CGGA**

Engine	Information	A10	A20	A40	A50	A70	C10 - C30		C20	E01
All engines	Qty: 4, Qty: 4						9.6374	C10		
All engines	x 4, COIL ON PLUG, incl. spark plug connector						9.6374	C10		

1.4 16V	Petrol	59	01/09-05/11	ENGINE: **BUD, CGGA**

Engine	Information	A10	A20	A40	A50	A70	C10 - C30		C20	E01
All engines	Qty: 4, Qty: 4						9.6374	C10		

1.4 TSI	Petrol	110	11/13-05/16	ENGINE: **CZDA**

Engine	Information	A10	A20	A40	A50	A70	C10 - C30		C20	E01
All engines	x 4, BERU, ELDOR, COIL ON PLUG, incl. spark plug connector, Number of pins:4, incl. spark plug connector						9.6499	C10		

1.4 TSi	Petrol	118	10/08->	ENGINE: **CAVD, CNWA, CTHD, CTKA**

Engine	Information	A10	A20	A40	A50	A70	C10 - C30		C20	E01
All engines	Qty: 4						9.6374	C10		
All engines	x 4, COIL ON PLUG, x 4, COIL ON PLUG, incl. spark plug connector, incl. spark plug connector						9.6374	C10		

1.4 TSI	Petrol	90	10/08->	ENGINE: **CAXA**

Engine	Information	A10	A20	A40	A50	A70	C10 - C30		C20	E01
All engines	Qty: 4						9.6374	C10		
All engines	x 4, COIL ON PLUG, incl. spark plug connector						9.6374	C10		

1.4 TSI	Petrol	92	11/13-05/16	ENGINE: **CZCA**

Engine	Information	A10	A20	A40	A50	A70	C10 - C30		C20	E01
All engines	x 4, BERU, ELDOR, COIL ON PLUG, incl. spark plug connector, Number of pins:4, incl. spark plug connector						9.6499	C10		

1.6	Petrol	75	10/08->	ENGINE: **BSE, BSF, CCSA, CMXA**

Engine	Information	A10	A20	A40	A50	A70	C10 - C30		C20	E01
All engines							9.8120	C30		4.9585

1.6 BiFuel	Natural Gas	75	05/11->	ENGINE: **CHGA**

Engine	Information	A10	A20	A40	A50	A70	C10 - C30		C20	E01
All engines							9.8120	C30		4.9585
All engines							9.8120	C30		
Eng. CHGA										4.9585

1.6 MultiFuel	Natural Gas	75	05/09->	ENGINE: **CHGA**

Engine	Information	A10	A20	A40	A50	A70	C10 - C30		C20	E01
All engines							9.8120	C30		4.9585
All engines							9.8120	C30		4.9585

1.8 TSI	Petrol	118	06/09-01/11	ENGINE: **CDAA**

Engine	Information	A10	A20	A40	A50	A70	C10 - C30		C20	E01
All engines	x 4, ELDOR, Housing Colour:Black, COIL ON PLUG, incl. spark plug connector						9.6326	C10		

2.0	Petrol	199	05/11->	ENGINE: **CDLF**

Engine	Information	A10	A20	A40	A50	A70	C10 - C30		C20	E01
All engines	Qty: 4						9.6326	C10		

A10	CONDENSER	**A20**	CONTACT SET	**A40**	DISTRIBUTOR CAP	**A50**	ROTOR	**A70**	PICK-UP
C10	COIL	**C20**	IGNITION MODULE	**C30**	ELECTRONIC IGNITION KIT	**E01**	IGNITION CABLE SET		

The present application list is a brief version. For the detailed information about the possibility of installation on a specific vehicle, please refer to our web-catalogue http://catalogo.facet.eu/

Vehicle	alim.	kW	Date	Engine	FUNCTIONS ON THE VEHICLE A10	A20	A40	A50	A70	C10 - C30	C20	E01
2.0 GTi	Petrol	147	06/09-11/13	CBFA, CCTA								
All engines	x 4, ELDOR, Housing Colour:Black, COIL ON PLUG, incl. spark plug connector									9.6326 C10		
2.0 GTi	Petrol	155	02/09-05/16	CCZB								
All engines	x 4, ELDOR, Housing Colour:Black, COIL ON PLUG, incl. spark plug connector									9.6326 C10		
2.0 GTi	Petrol	173	05/11-11/12	CDLG								
All engines	x 4, ELDOR, Housing Colour:Black, COIL ON PLUG, incl. spark plug connector									9.6326 C10		
2.0 R	Petrol	195	01/13-05/16	CDLA								
All engines	x 4, ELDOR, Housing Colour:Black, COIL ON PLUG, incl. spark plug connector									9.6326 C10		
2.0 R 4motion	Petrol	188	11/09-11/13	CDLC								
All engines	x 4, ELDOR, Housing Colour:Black, COIL ON PLUG, incl. spark plug connector									9.6326 C10		
2.0 R 4motion	Petrol	199	11/09-11/12	CDLF								
All engines	x 4, ELDOR, Housing Colour:Black, COIL ON PLUG, incl. spark plug connector									9.6326 C10		
2.0 TFSI	Petrol	147	07/09-07/13	CCZA								
All engines	x 4, ELDOR, Housing Colour:Black, COIL ON PLUG, incl. spark plug connector									9.6326 C10		
2.0 TFSi	Petrol	188	11/11->	CRZA								
All engines	Qty: 4									9.6326 C10		
2.0 TFSi Gti	Petrol	147	05/11->	CBFA, CCTA								
All engines	Qty: 4, version BOSCH									9.6326 C10		
2.0 TFSi Gti	Petrol	155	05/11->	CCZB								
All engines	Qty: 4, version BOSCH									9.6326 C10		
2.0 TFSi Gti	Petrol	173	05/11->	CDLG								
All engines	Qty: 4									9.6326 C10		
2.0 TSI	Petrol	188	01/13->	CDLC								
All engines	Qty: 4									9.6326 C10		
2.0 TSi R 4motion	Petrol	199	11/09-11/12	CDLF								
All engines	x 4, ELDOR, Housing Colour:Black, COIL ON PLUG, incl. spark plug connector									9.6326 C10		
2.5	Petrol	125	07/09->	CBTA, CBUA								
All engines	Qty: 5									9.6326 C10		
All engines	x 5, ELDOR, Housing Colour:Black, COIL ON PLUG, incl. spark plug connector									9.6326 C10		

A10	CONDENSER	**A20**	CONTACT SET	**A40**	DISTRIBUTOR CAP	**A50**	ROTOR	**A70**	PICK-UP
C10	COIL	**C20**	IGNITION MODULE	**C30**	ELECTRONIC IGNITION KIT	**E01**	IGNITION CABLE SET		

The present application list is a brief version. For the detailed information about the possibility of installation on a specific vehicle, please refer to our web-catalogue http://catalogo.facet.eu/

Vehicle	alim.	kW	Date	Engine	FUNCTIONS ON THE VEHICLE							
					A10	A20	A40	A50	A70	C10 - C30	C20	E01
TSi	Petrol	**90**	10/08-11/12	ENGINE **CAXA**								

Engine	Information	A10	A20	A40	A50	A70	C10 - C30		C20	E01
All engines	x 4, COIL ON PLUG, incl. spark plug connector						9.6374	C10		

GOLF VII

1.0 TSI	Petrol	**63**	01/17->	ENGINE **CHZK, DKLB**

Engine	Information	A10	A20	A40	A50	A70	C10 - C30		C20	E01
All engines	x 3, BERU, ELDOR, HITACHI, COIL ON PLUG, incl. spark plug connector, Number of pins:4, incl. spark plug connector						9.6499	C10		

1.0 TSI	Petrol	**81**	11/16->	ENGINE **CHZC**

Engine	Information	A10	A20	A40	A50	A70	C10 - C30		C20	E01
All engines	x 3, BERU, ELDOR, HITACHI, COIL ON PLUG, incl. spark plug connector, Number of pins:4, incl. spark plug connector						9.6499	C10		

1.0 TSI	Petrol	**85**	05/15->	ENGINE **CHZD, DKRF**

Engine	Information	A10	A20	A40	A50	A70	C10 - C30		C20	E01
All engines	x 3, BERU, ELDOR, HITACHI, COIL ON PLUG, incl. spark plug connector, Number of pins:4, incl. spark plug connector						9.6499	C10		

1.2 TSI	Petrol	**63**	08/12->	ENGINE **CJZB, CYVA**

Engine	Information	A10	A20	A40	A50	A70	C10 - C30		C20	E01
All engines	x 4, BERU, ELDOR, COIL ON PLUG, incl. spark plug connector, Number of pins:4, incl. spark plug connector						9.6499	C10		

1.2 TSI	Petrol	**77**	11/12->	ENGINE **CJZA**

Engine	Information	A10	A20	A40	A50	A70	C10 - C30		C20	E01
All engines	x 4, BERU, ELDOR, COIL ON PLUG, incl. spark plug connector, Number of pins:4, incl. spark plug connector						9.6499	C10		

1.2 TSI	Petrol	**81**	04/14->	ENGINE **CYVB**

Engine	Information	A10	A20	A40	A50	A70	C10 - C30		C20	E01
All engines	x 4, BERU, ELDOR, COIL ON PLUG, incl. spark plug connector, Number of pins:4, incl. spark plug connector						9.6499	C10		

1.2 TSi BlueMotion	Petrol	**63**	08/12->	ENGINE **CJZB, CYVA**

Engine	Information	A10	A20	A40	A50	A70	C10 - C30		C20	E01
All engines	x 4, BERU, ELDOR, COIL ON PLUG, incl. spark plug connector, Number of pins:4, incl. spark plug connector						9.6499	C10		

1.2 TSi BlueMotion	Petrol	**77**	11/12->	ENGINE **CJZA**

Engine	Information	A10	A20	A40	A50	A70	C10 - C30		C20	E01
All engines	x 4, BERU, ELDOR, COIL ON PLUG, incl. spark plug connector, Number of pins:4, incl. spark plug connector						9.6499	C10		

1.4 GTE Hybrid	Petrol/ Electric	**110**	05/14->	ENGINE **CUKB, DGEA**

Engine	Information	A10	A20	A40	A50	A70	C10 - C30		C20	E01
All engines	x 4, BERU, ELDOR, HITACHI, COIL ON PLUG, incl. spark plug connector, Number of pins:4, incl. spark plug connector						9.6499	C10		

1.4 TGI CNG	Petrol/ Compressed Natural Gas (CNG)	**81**	06/13->	ENGINE **CPWA, CZBA**

Engine	Information	A10	A20	A40	A50	A70	C10 - C30		C20	E01
All engines	x 4, BERU, ELDOR, HITACHI, x 4, BERU, COIL ON PLUG, ELDOR, COIL ON PLUG, incl. spark plug connector, Number of pins:4, incl. spark plug connector, Number of pins:4, incl. spark plug connector						9.6499	C10		

1.4 TSI	Petrol	**103**	08/12-03/17	ENGINE **CHPA, CPTA**

Engine	Information	A10	A20	A40	A50	A70	C10 - C30		C20	E01
All engines	x 4, BERU, ELDOR, COIL ON PLUG, incl. spark plug connector, Number of pins:4, incl. spark plug connector						9.6499	C10		

A10	CONDENSER	**A20**	CONTACT SET	**A40**	DISTRIBUTOR CAP	**A50**	ROTOR	**A70**	PICK-UP
C10	COIL	**C20**	IGNITION MODULE	**C30**	ELECTRONIC IGNITION KIT	**E01**	IGNITION CABLE SET		

The present application list is a brief version. For the detailed information about the possibility of installation on a specific vehicle, please refer to our web-catalogue http://catalogo.facet.eu/

Vehicle	alim.	kW	Date	Engine	FUNCTIONS ON THE VEHICLE A10	A20	A40	A50	A70	C10 - C30	C20	E01
1.4 TSI	Petrol	110	02/14->	ENGINE CHPB, CZDA, CZEA								

Engine	Information	A10	A20	A40	A50	A70	C10 - C30		C20	E01
All engines	x 4, BERU, ELDOR, HITACHI, x 4, BERU, COIL ON PLUG, ELDOR, COIL ON PLUG, incl. spark plug connector, Number of pins:4, incl. spark plug connector, Number of pins:4, incl. spark plug connector						9.6499	C10		
Eng. CHPB	Qty: 4						9.6499	C10		

1.4 TSI	Petrol	90	11/12->	ENGINE CMBA, CPVA, CXSA

Engine	Information	A10	A20	A40	A50	A70	C10 - C30		C20	E01
Eng. CMBA, CXSA	x 4, BERU, ELDOR, COIL ON PLUG, incl. spark plug connector, Number of pins:4, incl. spark plug connector						9.6499	C10		
Eng. CPVA	Qty: 4						9.6499	C10		

1.4 TSI	Petrol	92	04/14->	ENGINE CPVB, CZCA, CZDD

Engine	Information	A10	A20	A40	A50	A70	C10 - C30		C20	E01
Eng. CPVB, CZDD	Qty: 4						9.6499	C10		
Eng. CZCA, CZDD	x 4, BERU, ELDOR, HITACHI, COIL ON PLUG, incl. spark plug connector, Number of pins:4, incl. spark plug connector						9.6499	C10		

1.4 TSi BlueMotion	Petrol	103	08/12->	ENGINE CHPA

Engine	Information	A10	A20	A40	A50	A70	C10 - C30		C20	E01
All engines	x 4, BERU, ELDOR, COIL ON PLUG, incl. spark plug connector, Number of pins:4, incl. spark plug connector						9.6499	C10		

1.4 TSi BlueMotion	Petrol	90	05/13->	ENGINE CXSA

Engine	Information	A10	A20	A40	A50	A70	C10 - C30		C20	E01
All engines	x 4, BERU, ELDOR, COIL ON PLUG, incl. spark plug connector, Number of pins:4, incl. spark plug connector						9.6499	C10		

1.4 TSI MultiFuel	Petrol/ Ethanol	90	04/13->	ENGINE CPVA

Engine	Information	A10	A20	A40	A50	A70	C10 - C30		C20	E01
All engines	x 4, BERU, ELDOR, COIL ON PLUG, incl. spark plug connector, Number of pins:4, incl. spark plug connector						9.6499	C10		

1.4 TSI MultiFuel	Petrol/ Ethanol	92	12/13->	ENGINE CPVB

Engine	Information	A10	A20	A40	A50	A70	C10 - C30		C20	E01
All engines	x 4, BERU, ELDOR, HITACHI, COIL ON PLUG, incl. spark plug connector, Number of pins:4, incl. spark plug connector						9.6499	C10		

1.6	Petrol	81	05/14->	ENGINE CWVA

Engine	Information	A10	A20	A40	A50	A70	C10 - C30		C20	E01
All engines	x 4, BERU, ELDOR, COIL ON PLUG, incl. spark plug connector, Number of pins:4, incl. spark plug connector						9.6499	C10		

1.8 TSI 4motion	Petrol	132	12/14->	ENGINE CJSB

Engine	Information	A10	A20	A40	A50	A70	C10 - C30		C20	E01
All engines	x 4, HITACHI, COIL ON PLUG, incl. spark plug connector						9.6536	C10		

2.0 GTI	Petrol	155	11/13->	ENGINE CXCA

Engine	Information	A10	A20	A40	A50	A70	C10 - C30		C20	E01
All engines	Qty: 4						9.6536	C10		

2.0 GTI	Petrol	162	04/13->	ENGINE CXDA

Engine	Information	A10	A20	A40	A50	A70	C10 - C30		C20	E01
All engines	x 4, BERU, COIL ON PLUG, incl. spark plug connector						9.6536	C10		

2.0 GTI TCR	Petrol	213	11/18->	ENGINE CJXH, DNUC

Engine	Information	A10	A20	A40	A50	A70	C10 - C30		C20	E01
All engines	01/11/19 ->, x 4, HITACHI, COIL ON PLUG, incl. spark plug connector						9.6536	C10		

A10	CONDENSER	A20	CONTACT SET	A40	DISTRIBUTOR CAP	A50	ROTOR	A70	PICK-UP
C10	COIL	C20	IGNITION MODULE	C30	ELECTRONIC IGNITION KIT	E01	IGNITION CABLE SET		

The present application list is a brief version. For the detailed information about the possibility of installation on a specific vehicle, please refer to our web-catalogue http://catalogo.facet.eu/

Vehicle	alim.	kW	Date	Engine	FUNCTIONS ON THE VEHICLE: A10	A20	A40	A50	A70	C10 - C30	C20	E01
2.0 R 4motion	Petrol	213	12/16->	CJXD, DJHB, DNUC								
Engine: All engines — Information: 01/11/19 ->, x 4, HITACHI, COIL ON PLUG, incl. spark plug connector										9.6536 C10		
2.0 R 4motion	Petrol	221	11/13->	CJXC, DNUE								
Engine: All engines — Information: 01/11/19 ->, x 4, HITACHI, COIL ON PLUG, incl. spark plug connector										9.6536 C10		
2.0 R 4motion	Petrol	228	12/16->	CJXG, DJHA								
Engine: All engines — Information: 01/11/19 ->, x 4, HITACHI, COIL ON PLUG, incl. spark plug connector										9.6536 C10		
GOLF VIII												
1.0 eTSI	Petrol/ Electric	81	06/20->	DLAA								
Engine: All engines — Information: x 3, HITACHI, COIL ON PLUG, incl. spark plug connector										9.6499 C10		
1.0 TSI	Petrol	66	02/20->	DLAB								
Engine: All engines — Information: x 3, HITACHI, COIL ON PLUG, incl. spark plug connector										9.6499 C10		
1.0 TSI	Petrol	81	02/20->	DLAA								
Engine: All engines — Information: x 3, HITACHI, COIL ON PLUG, incl. spark plug connector										9.6499 C10		
1.4 GTE Plug-in Hybrid	Petrol/ Electric	110	07/20->	DGEA								
Engine: All engines — Information: x 4, ELDOR, COIL ON PLUG, Number of pins:4, incl. spark plug connector										9.6499 C10		
1.4 GTE Plug-in Hybrid	Petrol/ Electric	180	07/20->	DGEA								
Engine: All engines — Information: x 4, ELDOR, COIL ON PLUG, Number of pins:4, incl. spark plug connector										9.6499 C10		
1.4 TSI eHybrid	Petrol/ Electric	110	07/20->	DGEA								
Engine: All engines — Information: x 4, ELDOR, COIL ON PLUG, Number of pins:4, incl. spark plug connector										9.6499 C10		
2.0 GTI	Petrol	180	09/20->	DNPA								
Engine: All engines — Information: x 4, HITACHI, COIL ON PLUG, incl. spark plug connector										9.6536 C10		
2.0 GTI Clubsport	Petrol	221	10/20->	DNFC								
Engine: All engines — Information: x 4, HITACHI, COIL ON PLUG, incl. spark plug connector										9.6536 C10		
2.0 TSI R 4motion	Petrol	235	09/20->	DNFG, DSFE, DSFF								
Engine: All engines — Information: x 4, HITACHI, COIL ON PLUG, incl. spark plug connector										9.6536 C10		
JETTA II												
1.0	Petrol	37	08/85-10/91	HZ								
Engine: All engines — Information: ->ch. 1G-MB150 000, ->ch. 1G-MW480 000, version Bosch							2.7494PHT		8.2693			
Engine: All engines — Information: ch. 1G-MB150 001 ->, ch. 1G-MW480 001 ->, version Bosch							2.7530/36PHT		8.2734			

A10	CONDENSER	A20	CONTACT SET	A40	DISTRIBUTOR CAP	A50	ROTOR	A70	PICK-UP
C10	COIL	C20	IGNITION MODULE	C30	ELECTRONIC IGNITION KIT	E01	IGNITION CABLE SET		

The present application list is a brief version. For the detailed information about the possibility of installation on a specific vehicle, please refer to our web-catalogue http://catalogo.facet.eu/

Vehicle	alim.	kW	Date	Engine	FUNCTIONS ON THE VEHICLE A10	A20	A40	A50	A70	C10 - C30	C20	E01

JETTA II

				ENGINE
1.0	Petrol	37	08/85-10/91	HZ

Engine	Information	A10	A20	A40	A50	A70	C10 - C30		C20	E01
All engines	01/08/86 ->, version Bosch				3.7556RS					
All engines	no specific info conc. application available						9.6025, 9.6026	C10		
All engines									9.4007	4.8493

				ENGINE
1.3	Petrol	37	08/85-12/87	NU

Engine	Information	A10	A20	A40	A50	A70	C10 - C30		C20	E01
All engines	version Bosch			2.7494PHT	3.7556RS	8.2693				
All engines							9.6025	C10		4.9671

				ENGINE
1.3	Petrol	40	01/84-06/87	HK, MH

Engine	Information	A10	A20	A40	A50	A70	C10 - C30		C20	E01
Eng. HK	version Bosch	0.0179/95	1.2549HDVS		3.7573/14RS					
Eng. HK	->ch. 19-E-855 000, version Bosch			2.7479PHT						
All engines	ch. 19-E-855 001 ->, version Bosch			2.7494PHT						
Eng. MH	version Bosch				3.7556RS	8.2693				
Eng. MH	->year 31/07/87						9.6025	C10		
Eng. MH	01/08/87 ->						9.6026	C10		
Eng. MH									9.4007	
All engines	ch. 19-E-855 001 ->, ->year 31/07/86, 01/08/88 ->									4.8493
Eng. HK	->ch. 19-E-855 000									4.8727
Eng. MH	01/08/86 ->, ->year 31/07/88									4.9671

				ENGINE
1.3	Petrol	43	01/84-10/86	GT

Engine	Information	A10	A20	A40	A50	A70	C10 - C30		C20	E01
All engines	version Bosch	0.0179/95	1.2549HDVS		3.7556RS					
All engines	->ch. 19-E-855 000, version Bosch			2.7479PHT						
All engines	ch. 19-E-855 001 ->, version Bosch			2.7494PHT						
All engines	ch. 19-E-855 001 ->									4.8493
All engines	->ch. 19-E-855 000									4.8727

				ENGINE
1.3 Cat	Petrol	40	06/87-12/91	2G, MH, NZ

Engine	Information	A10	A20	A40	A50	A70	C10 - C30		C20	E01
All engines	->ch. 1G-MB150 000, ->ch. 1G-MW480 000, version Bosch			2.7494PHT						
Eng. 2G, NZ	ch. 1G-MB150 001 ->, ch. 1G-MW480 001 ->, version Bosch			2.7530/36PHT						
All engines	version Bosch				3.7556RS					
All engines	->ch. 1G-MB150 000, ->ch. 1G-MW480 000, version Bosch, distr. num. 030 905 205 D					8.2693				
Eng. 2G, NZ	ch. 1G-MB150 001 ->, ch. 1G-MW480 001 ->, version Bosch, distr. num. 030 805 205 S					8.2734				
All engines	->year 31/07/87, no specific info conc. application available						9.6025	C10		
All engines	01/08/87 ->, no specific info conc. application available						9.6026	C10		
All engines									9.4007	
All engines	->year 31/07/86, ->year 31/01/87, 01/08/88 ->									4.8493
Eng. MH, NZ	01/08/86 ->, 01/02/87 ->, ->year 31/07/88									4.9671

				ENGINE
1.6	Petrol	51	08/86-10/91	EZA, PN

Engine	Information	A10	A20	A40	A50	A70	C10 - C30		C20	E01
All engines	version Bosch			2.7530/36PHT	3.7555RS					
All engines	version Ducellier			2.7668PHT	3.7699RS					
Eng. PN	->year 31/07/86, version Bosch					8.2659				
All engines	01/08/86 ->, version Bosch					8.2719				
All engines	no specific info conc. application available						9.6025	C10		
Eng. PN	no specific info conc. application available						9.6026	C10		
All engines									9.4007	4.8725

				ENGINE
1.6	Petrol	53	03/86-10/91	RF

Engine	Information	A10	A20	A40	A50	A70	C10 - C30		C20	E01
All engines	version Bosch			2.7530/36PHT	3.7555RS	8.2719				
All engines	version Ducellier			2.7668PHT	3.7699RS					

A10	CONDENSER	A20	CONTACT SET	A40	DISTRIBUTOR CAP	A50	ROTOR	A70	PICK-UP
C10	COIL	C20	IGNITION MODULE	C30	ELECTRONIC IGNITION KIT	E01	IGNITION CABLE SET		

The present application list is a brief version. For the detailed information about the possibility of installation on a specific vehicle, please refer to our web-catalogue http://catalogo.facet.eu/

Vehicle	alim.	kW	Date	Engine	FUNCTIONS ON THE VEHICLE: A10	A20	A40	A50	A70	C10 - C30	C20	E01
1.6	Petrol	53	03/86-10/91	RF								

Engine	Information	A10	A20	A40	A50	A70	C10 - C30	C20	E01
All engines	no specific info conc. application available						9.6025, 9.6026 C10		
All engines								9.4007	4.8725

1.6	Petrol	55	01/84-07/92	ABN, EZ

Engine	Information	A10	A20	A40	A50	A70	C10 - C30	C20	E01
Eng. EZ	version Bosch	0.0179/96	1.2534HDVS						
Eng. EZ	version Bosch, distr. num. 050 905 205 C, eng. type 185 001 ->, ->year 01/07/86			2.7494PHT					
All engines	version Bosch			2.7530/36PHT					
All engines	version Ducellier, 01/08/85 ->			2.7668PHT	3.7699RS				
Eng. EZ	version Bosch, eng. type 185 001 ->, ->eng. 309 582				3.7525RS				
All engines	version Bosch, distr. num. 026 905 206, distr. num. 050 905 205, distr. num. 050 905 205 C, ->eng. 185 000, eng. type 309 583 ->				3.7555RS				
All engines	version Bosch, distr. num. 050 905 205 C, eng. type 309 583 ->					8.2719			
All engines	no specific info conc. application available						9.6025 C10		
Eng. EZ	no specific info conc. application available						9.6026 C10		
All engines								9.4007	
All engines	ch. 19-E-855 001 ->								4.8725
Eng. EZ	->ch. 19-E-855 000								4.8727

1.6	Petrol	60	12/83-07/88	HM

Engine	Information	A10	A20	A40	A50	A70	C10 - C30	C20	E01
All engines	version Bosch	0.0179/96	1.2534HDVS		3.7555RS				
All engines	version Bosch, ->eng. 016 000			2.7479PHT					
All engines	version Bosch, eng. type 016 001 ->, ->year 01/07/86			2.7494PHT					
All engines	01/08/86 ->, version Bosch			2.7530/36PHT					
All engines	version Bosch, eng. type 033 001 ->					8.2719			
All engines	ch. 19-F-350 000 ->						9.6025 C10		
All engines								9.4007	
All engines	ch. 19-E-855 001 ->								4.8725
All engines	->ch. 19-E-855 000								4.8727

1.8	Petrol	62	08/86-01/90	RH

Engine	Information	A10	A20	A40	A50	A70	C10 - C30	C20	E01
All engines	version Bosch			2.7494PHT	3.7555RS	8.2719			
All engines							9.6025 C10	9.4007	4.8725

1.8	Petrol	66	08/84-10/91	GU, GX

Engine	Information	A10	A20	A40	A50	A70	C10 - C30	C20	E01
Eng. GU	version Bosch, ->eng. 003 200			2.7479PHT					
All engines	version Bosch, ->year 31/07/86, eng. type 003 201 ->, ->eng. 31/07/87			2.7494PHT					
All engines	version Bosch, 01/08/86 ->, 01/08/87 ->			2.7530/36PHT					
Eng. GU	version Ducellier, 01/08/85 ->			2.7668PHT	3.7699RS				
All engines	version Bosch				3.7555RS	8.2719			
All engines	ch. 19-E-855 001 ->						9.6025 C10		4.8725
All engines	->ch. 19-E-855 000						9.6032 C10		4.8727
All engines								9.4007	

1.8	Petrol	77	08/87-10/91	RV

Engine	Information	A10	A20	A40	A50	A70	C10 - C30	C20	E01
All engines	version Bosch, ch. 1G-LB100 001 ->, ch. 1G-LW320 001 ->, ->ch. 1G-MB150 000, ->ch. 1G-MW480 000			2.7494PHT					
All engines	version Bosch, ->ch. 1G-LB100 000, ->ch. 1G-LW320 000, ch. 1G-MB150 001 ->, ch. 1G-MW480 001 ->			2.7530/36PHT					
All engines	version Bosch				3.7573/21RS				
All engines							9.6025 C10	9.4007	4.8725

1.8	Petrol	79	08/85-10/87	RD

Engine	Information	A10	A20	A40	A50	A70	C10 - C30	C20	E01
All engines	version Bosch			2.7530/36PHT	3.7573/21RS				
All engines							9.6025 C10	9.4007	4.8725

A10	CONDENSER	A20	CONTACT SET	A40	DISTRIBUTOR CAP	A50	ROTOR	A70	PICK-UP
C10	COIL	C20	IGNITION MODULE	C30	ELECTRONIC IGNITION KIT	E01	IGNITION CABLE SET		

The present application list is a brief version. For the detailed information about the possibility of installation on a specific vehicle, please refer to our web-catalogue http://catalogo.facet.eu/

Vehicle	alim.	kW	Date	Engine	FUNCTIONS ON THE VEHICLE A10	A20	A40	A50	A70	C10 - C30	C20	E01
1.8	Petrol	82	01/84-10/91	EV, PB								

Engine	Information	A10	A20	A40	A50	A70	C10 - C30		C20	E01
Eng. EV	version Bosch, ->eng. 025 000			2.7479PHT						
All engines	version Bosch, eng. type 025 001 ->, ->year 31/07/86, ch. 1G-LB100 001 ->, ch. 1G-LW320 001 ->, ->ch. 1G-MB150 000, ->ch. 1G-MW480 000			2.7494PHT						
All engines	version Bosch, 01/08/86 ->, ->ch. 1G-LB100 000, ->ch. 1G-LW320 000, ch. 1G-MB150 001 ->, ch. 1G-MW480 001 ->			2.7530/36PHT						
Eng. EV	version Bosch, 01/08/85 ->				3.7555RS					
Eng. EV	version Bosch, ->year 31/07/85				3.7573/16RS					
Eng. PB	version Bosch				3.7573/21RS					
Eng. EV	version Bosch					8.2719				
All engines	ch. 19-E-855 001 ->						9.6025	C10		4.8725
Eng. EV	->ch. 19-E-855 000						9.6032	C10		4.8727
All engines									9.4007	

1.8 16V	Petrol	102	06/87-12/89	KR

Engine	Information	A10	A20	A40	A50	A70	C10 - C30		C20	E01
All engines	version Bosch			2.7530/36PHT	3.7573/21RS	8.2723				
All engines							9.6025	C10	9.4007	
All engines	->year 31/07/89									4.8737

1.8 16V	Petrol	95	08/86-10/91	PL

Engine	Information	A10	A20	A40	A50	A70	C10 - C30		C20	E01
All engines	version Bosch			2.7530/36PHT	3.7573/21RS	8.2723				
All engines	no specific info conc. application available						9.6025, 9.6026	C10		
All engines									9.4007	
All engines	->year 31/07/89									4.8737

1.8 Cat	Petrol	66	08/87-10/91	GX, RP

Engine	Information	A10	A20	A40	A50	A70	C10 - C30		C20	E01
Eng. GX	version Bosch, ->year 31/07/86			2.7494PHT						
All engines	version Bosch, 01/08/86 ->			2.7530/36PHT						
All engines	version Bosch				3.7555RS	8.2719				
All engines	ch. 19-E-855 001 ->						9.6025	C10		4.8725
Eng. GX	->ch. 19-E-855 000						9.6032	C10		4.8727
All engines									9.4007	

1.8 Cat	Petrol	79	01/87-10/91	PF

Engine	Information	A10	A20	A40	A50	A70	C10 - C30		C20	E01
All engines	version Bosch, ch. 1G-LB100 001 ->, ch. 1G-LW320 001 ->, ->ch. 1G-MB150 000, ->ch. 1G-MW480 000			2.7494PHT						
All engines	version Bosch, ->ch. 1G-LB100 000, ->ch. 1G-LW320 000, ch. 1G-MB150 001 ->, ch. 1G-MW480 001 ->			2.7530/36PHT						
All engines	version Bosch				3.7573/21RS					
All engines							9.6025	C10	9.4007	4.8725

1.8 G60	Petrol	118	04/90-07/91	PG

Engine	Information	A10	A20	A40	A50	A70	C10 - C30		C20	E01
All engines	version Bosch, ->ch. 1G-MB150 000, ->ch. 1G-MW480 000			2.7494PHT						
All engines	version Bosch, ch. 1G-MB150 001 ->, ch. 1G-MW480 001 ->			2.7530/36PHT						
All engines	version Bosch				3.7573/21RS					
All engines							9.6025	C10	9.4007	4.8725

1.8 Syncro	Petrol	62	08/87-07/88	RH

Engine	Information	A10	A20	A40	A50	A70	C10 - C30		C20	E01
All engines							9.6025	C10	9.4007	4.8725

1.8 Syncro	Petrol	66	08/85-12/88	GU, GX, RP

Engine	Information	A10	A20	A40	A50	A70	C10 - C30		C20	E01
Eng. GU	version Bosch, ->eng. 003 200			2.7479PHT						
Eng. GU	version Bosch, eng. type 003 201 ->, ->year 31/07/87			2.7494PHT						
Eng. GU, RP	version Bosch, 01/08/87 ->			2.7530/36PHT						

A10	CONDENSER	A20	CONTACT SET	A40	DISTRIBUTOR CAP	A50	ROTOR	A70	PICK-UP
C10	COIL	C20	IGNITION MODULE	C30	ELECTRONIC IGNITION KIT	E01	IGNITION CABLE SET		

The present application list is a brief version. For the detailed information about the possibility of installation on a specific vehicle, please refer to our web-catalogue http://catalogo.facet.eu/

Vehicle	alim.	kW	Date	Engine	FUNCTIONS ON THE VEHICLE: A10	A20	A40	A50	A70	C10 - C30	C20	E01
1.8 Syncro	Petrol	66	08/85-12/88	GU, GX, RP								

Engine	Information	A10	A20	A40	A50	A70	C10 - C30	C20	E01
Eng. GU	version Ducellier, 01/08/85 ->			2.7668PHT	3.7699RS				
Eng. GU, RP	version Bosch				3.7555RS	8.2719			
All engines	ch. 1G-L-000 001 ->						9.6025 C10		
Eng. GU	->ch. 1G-K-990 000						9.6026 C10		
All engines								9.4007	
All engines	ch. 19-E-855 001 ->								4.8725
Eng. GU	->ch. 19-E-855 000								4.8727

1.8 Syncro	Petrol	72	08/88-07/91	3E82

Engine	Information	A10	A20	A40	A50	A70	C10 - C30	C20	E01
All engines	ch. 1G-L-000 001 ->						9.6025 C10		
All engines	->ch. 1G-K-990 000						9.6026 C10		
All engines								9.4007	4.8725

1.8i GT	Petrol	82	12/83-07/88	GZ

Engine	Information	A10	A20	A40	A50	A70	C10 - C30	C20	E01
All engines	->year 31/07/86, version Bosch			2.7494PHT					
All engines	version Bosch, 01/08/86 ->			2.7530/36PHT					
All engines	version Bosch, 01/08/85 ->				3.7555RS				
All engines	version Bosch, ->year 31/07/85				3.7573/16RS				
All engines	version Bosch					8.2719			
All engines	ch. 19-E-855 001 ->						9.6025 C10		4.8725
All engines	->ch. 19-E-855 000						9.6032 C10		4.8727
All engines								9.4007	

JETTA V

1.4 TSI	Petrol	103	07/06-10/10	BMY

Engine	Information	A10	A20	A40	A50	A70	C10 - C30	C20	E01
All engines	x 4, COIL ON PLUG, incl. spark plug connector						9.6374 C10		

1.4 TSI	Petrol	118	07/08-10/10	CAVD

Engine	Information	A10	A20	A40	A50	A70	C10 - C30	C20	E01
All engines	x 4, COIL ON PLUG, incl. spark plug connector						9.6374 C10		

1.4 TSI	Petrol	125	07/06-10/10	BLG

Engine	Information	A10	A20	A40	A50	A70	C10 - C30	C20	E01
All engines	x 4, COIL ON PLUG, incl. spark plug connector						9.6374 C10		

1.4 TSI	Petrol	90	05/07-10/10	CAXA

Engine	Information	A10	A20	A40	A50	A70	C10 - C30	C20	E01
All engines	x 4, COIL ON PLUG, incl. spark plug connector						9.6374 C10		

1.6	Petrol	75	09/04-10/10	BSE, BSF, CCSA

Engine	Information	A10	A20	A40	A50	A70	C10 - C30	C20	E01
All engines							9.8120 C30		4.9585

1.6 [CHN]	Petrol	68	01/05->	BJG

Engine	Information	A10	A20	A40	A50	A70	C10 - C30	C20	E01
All engines							9.8120 C30		4.9585

1.6 FSI	Petrol	85	09/05-10/10	BLF

Engine	Information	A10	A20	A40	A50	A70	C10 - C30	C20	E01
All engines	x 4, COIL ON PLUG, incl. spark plug connector						9.6374 C10		

1.6 MultiFuel	Petrol/ Ethanol	75	01/08-10/10	CCSA

Engine	Information	A10	A20	A40	A50	A70	C10 - C30	C20	E01
All engines							9.8120 C30		4.9585

A10	CONDENSER	A20	CONTACT SET	A40	DISTRIBUTOR CAP	A50	ROTOR	A70	PICK-UP
C10	COIL	C20	IGNITION MODULE	C30	ELECTRONIC IGNITION KIT	E01	IGNITION CABLE SET		

The present application list is a brief version. For the detailed information about the possibility of installation on a specific vehicle, please refer to our web-catalogue http://catalogo.facet.eu/

Vehicle	alim.	kW	Date	Engine	FUNCTIONS ON THE VEHICLE A10	A20	A40	A50	A70	C10 - C30	C20	E01
2.0 FSI	Petrol	110	08/05-10/10	**BLR, BLY, BVY, BVZ**								
All engines				x 4, ELDOR, Housing Colour:Black, COIL ON PLUG, incl. spark plug connector						9.6326 C10		
2.0 TFSI	Petrol	147	10/05-10/10	**BPY, BWA, CAWB, CBFA, CCTA, CCZA**								
Eng. BPY, CCZA				Qty: 4						9.6326 C10		
Eng. BWA, CAWB, CBFA, CCTA				x 4, ELDOR, Housing Colour:Black, COIL ON PLUG, incl. spark plug connector						9.6326 C10		
2.5	Petrol	110	01/05->	**BGP, BGQ, BTK**								
Eng. BGP, BTK				->ch. 1K7133612, ch. 1K7133613 ->, x 5, COIL ON PLUG, ELDOR, Housing Colour:Black, COIL ON PLUG, incl. spark plug connector						9.6326 C10		
Eng. BGQ				Qty: 5						9.6326 C10		
2.5	Petrol	125	07/08-10/10	**CBTA, CCCA**								
Eng. CBTA				x 5, ELDOR, Housing Colour:Black, COIL ON PLUG, incl. spark plug connector						9.6326 C10		
Eng. CCCA				Qty: 5						9.6326 C10		
JETTA VI												
1.2 TSI	Petrol	77	10/10->	**CBZB, CYVD**								
Eng. CYVD				Qty: 4						9.6499 C10		
Eng. CBZB										9.8120 C30		4.7248
1.2 TSI 16V	Petrol	77	08/14-12/17	**CYVD**								
All engines				x 4, BERU, ELDOR, COIL ON PLUG, incl. spark plug connector, Number of pins:4, incl. spark plug connector						9.6499 C10		
1.4 TSI	Petrol	110	04/11->	**CAVA, CTHA, CZDA, CZTA**								
Eng. CAVA, CTHA				x 4, COIL ON PLUG, incl. spark plug connector						9.6374 C10		
Eng. CZDA				x 4, BERU, ELDOR, COIL ON PLUG, incl. spark plug connector, Number of pins:4, incl. spark plug connector						9.6499 C10		
Eng. CZTA				Qty: 4						9.6499 C10		
1.4 TSI	Petrol	118	04/11->	**CAVD, CTHD**								
All engines				x 4, COIL ON PLUG, incl. spark plug connector						9.6374 C10		
1.4 TSI	Petrol	90	05/11->	**CAXA, CMSB**								
All engines				x 4, COIL ON PLUG, incl. spark plug connector						9.6374 C10		
1.4 TSI	Petrol	92	08/14->	**CZCA**								
All engines				x 4, BERU, ELDOR, HITACHI, COIL ON PLUG, incl. spark plug connector, Number of pins:4, incl. spark plug connector						9.6499 C10		
1.4 TSI Hybrid	Petrol/ Electric	110	04/11->	**CNLA**								
All engines				x 4, BERU, ELDOR, COIL ON PLUG, incl. spark plug connector, Number of pins:4, incl. spark plug connector						9.6499 C10		
1.6	Petrol	63	03/13->	**CFNB**								
All engines				x 4, COIL ON PLUG, incl. spark plug connector						9.6374 C10		

A10	CONDENSER	**A20**	CONTACT SET	**A40**	DISTRIBUTOR CAP	**A50**	ROTOR	**A70**	PICK-UP
C10	COIL	**C20**	IGNITION MODULE	**C30**	ELECTRONIC IGNITION KIT	**E01**	IGNITION CABLE SET		

The present application list is a brief version. For the detailed information about the possibility of installation on a specific vehicle, please refer to our web-catalogue http://catalogo.facet.eu/

VW

Vehicle	alim.	kW	Date	Engine	FUNCTIONS ON THE VEHICLE A10	A20	A40	A50	A70	C10 - C30	C20	E01
1.6	Petrol	77	12/11->	CFNA, CLRA								

Engine	Information	A10	A20	A40	A50	A70	C10 - C30	C20	E01
All engines	x 4, COIL ON PLUG, incl. spark plug connector						9.6374 C10		

1.6	Petrol	81	09/15->	CWVA								

Engine	Information	A10	A20	A40	A50	A70	C10 - C30	C20	E01
All engines	x 4, BERU, ELDOR, COIL ON PLUG, incl. spark plug connector, Number of pins:4, incl. spark plug connector						9.6499 C10		

1.6 [RUS]	Petrol	66	01/15->	CWVB								

Engine	Information	A10	A20	A40	A50	A70	C10 - C30	C20	E01
All engines	Qty: 4						9.6499 C10		

1.6 [RUS]	Petrol	81	01/15->	CWVA								

Engine	Information	A10	A20	A40	A50	A70	C10 - C30	C20	E01
All engines	Qty: 4						9.6499 C10		

1.6 MPi	Petrol	66	09/15-04/18	CWVB								

Engine	Information	A10	A20	A40	A50	A70	C10 - C30	C20	E01
All engines	x 4, BERU, ELDOR, COIL ON PLUG, incl. spark plug connector, Number of pins:4, incl. spark plug connector						9.6499 C10		

1.8 TSI	Petrol	125	07/14->	CPKA, CPRA								

Engine	Information	A10	A20	A40	A50	A70	C10 - C30	C20	E01
All engines	01/01/15 ->, x 4, BERU, COIL ON PLUG, incl. spark plug connector						9.6536 C10		

2.0	Petrol	85	06/10-12/17	CBPA, CKJA								

Engine	Information	A10	A20	A40	A50	A70	C10 - C30	C20	E01
Eng. CBPA							9.8120 C30		4.9585
Eng. CKJA									4.7223

2.0 TFSI	Petrol	147	12/10->	CBFA, CCTA, CCZA								

Engine	Information	A10	A20	A40	A50	A70	C10 - C30	C20	E01
All engines	x 4, ELDOR, Housing Colour:Black, COIL ON PLUG, incl. spark plug connector						9.6326 C10		

2.0 TSI	Petrol	155	12/12-12/17	CPLA, CPPA								

Engine	Information	A10	A20	A40	A50	A70	C10 - C30	C20	E01
All engines	01/01/15 ->, x 4, BERU, COIL ON PLUG, incl. spark plug connector						9.6536 C10		

2.5	Petrol	125	04/10->	CBTA, CBUA, CCCA								

Engine	Information	A10	A20	A40	A50	A70	C10 - C30	C20	E01
All engines	x 5, ELDOR, Housing Colour:Black, COIL ON PLUG, incl. spark plug connector						9.6326 C10		

KAEFER

1.2	Petrol	22	01/54-07/65	M51								

Engine	Information	A10	A20	A40	A50	A70	C10 - C30	C20	E01
All engines			1.2540	2.7462	3.7518RS				

1200 1.2	Petrol	25	01/60-12/85	D								

Engine	Information	A10	A20	A40	A50	A70	C10 - C30	C20	E01
All engines			1.2540		3.7521RS				

1300 1.3	Petrol	27	08/65-07/70	E								

Engine	Information	A10	A20	A40	A50	A70	C10 - C30	C20	E01
All engines			1.2540		3.7514RS				

1300 1.3	Petrol	29	01/65-07/70	F								

Engine	Information	A10	A20	A40	A50	A70	C10 - C30	C20	E01
All engines			1.2540						

A10	CONDENSER	A20	CONTACT SET	A40	DISTRIBUTOR CAP	A50	ROTOR	A70	PICK-UP
C10	COIL	C20	IGNITION MODULE	C30	ELECTRONIC IGNITION KIT	E01	IGNITION CABLE SET		

The present application list is a brief version. For the detailed information about the possibility of installation on a specific vehicle, please refer to our web-catalogue http://catalogo.facet.eu/

Vehicle	alim.	kW	Date	Engine	FUNCTIONS ON THE VEHICLE A10	A20	A40	A50	A70	C10 - C30	C20	E01
1300 1.3	Petrol	32	01/70-01/73	**AB**								
Engine: All engines	Information:					1.2540		3.7521RS				
1302 1.2	Petrol	25	08/69-08/72	**D**								
Engine: All engines	Information:					1.2540						
1302 1.3	Petrol	29	08/70-07/75	**AC**								
Engine: All engines	Information:					1.2540						
1302 1.3	Petrol	32	08/70-08/72	**AB**								
Engine: All engines	Information:					1.2540		3.7521RS				
1302 1.6	Petrol	34	08/70-07/74	**AF**								
Engine: All engines	Information:					1.2540						
1302 1.6	Petrol	35	07/71-07/74	**AE, AH, AK**								
Engine: All engines	Information:					1.2540						
1302 1.6	Petrol	37	01/70-01/73	**AD**								
Engine: All engines	Information:					1.2540		3.7521RS				
1302,1303 1.6	Petrol	37	07/70-06/79	**AD**								
Engine: All engines	Information:					1.2540						
1303 1.3	Petrol	32	08/72-07/75	**AB, AR**								
Engine: All engines	Information:					1.2540						
1303 1.6	Petrol	35	08/70-12/79	**AD, AE, AH, AK**								
Engine: All engines	Information:					1.2540						
1303 LS, S 1.6	Petrol	37	08/72-12/79	**AD, AJ, AS**								
Engine: All engines	Information:					1.2540						
1500 1.5	Petrol	32	01/66-11/73	**4SC20M150Q6**								
Engine: All engines	Information:					1.2532HDV, 1.2540		3.7514RS, 3.7521RS				
1500 1.6	Petrol	37	07/70-01/73	**AD**								
Engine: All engines	Information:					1.2540						
KARMANN GHIA												
1500	Petrol	32	01/66-12/69	**4SC20M150Q6**								
Engine: All engines	Information:							3.7521RS				

A10	CONDENSER	**A20**	CONTACT SET	**A40**	DISTRIBUTOR CAP	**A50**	ROTOR	**A70**	PICK-UP
C10	COIL	**C20**	IGNITION MODULE	**C30**	ELECTRONIC IGNITION KIT	**E01**	IGNITION CABLE SET		

The present application list is a brief version. For the detailed information about the possibility of installation on a specific vehicle, please refer to our web-catalogue http://catalogo.facet.eu/

Vehicle	alim.	kW	Date	Engine	FUNCTIONS ON THE VEHICLE							
					A10	A20	A40	A50	A70	C10 - C30	C20	E01
1600	Petrol	37	01/70-12/73	**AD**								
All engines								3.7521RS				
LT I												
2.4	Petrol	66	12/82-07/92	**DL**								
All engines				version Bosch		1.2534HDVS		3.7573/17RS				
2.4 4WD	Petrol	66	12/82-07/92	**DL**								
All engines				version Bosch		1.2534HDVS		3.7573/17RS				
2.4 i	Petrol	69	08/89-06/96	**1E**								
All engines				version Bosch		1.2534HDVS	2.7530/3PHT					
All engines										9.6025 C10		
LT II												
2.3	Petrol	105	05/96-07/06	**AGL**								
All engines				LT 28, x 1, D.I.S., Dia: 4 mm, connector type, saw teeth						9.6216 C10		
LUPO												
1.0	Petrol	37	09/98-07/05	**AER, ALD, ALL, ANV, AUC**								
Eng. AER, ALL				version Bosch			2.7494PHT	3.7573/21RS	8.2723			
Eng. AER, ALL				version Marelli			2.8216PHT	3.8257RS				
Eng. AER, ALL										9.8114 C30		4.9641
Eng. ALD, ANV, AUC										9.8120 C30		
Eng. ALD, ANV												4.9595
Eng. AUC												4.9601
1.4	Petrol	44	10/00-07/05	**AUD**								
All engines										9.8120 C30		4.9601
1.4 16V	Petrol	55	09/98-07/05	**AHW, AKQ, APE, AUA, BBY**								
Eng. BBY				x 4, COIL ON PLUG, incl. spark plug connector						9.6374 C10		
Eng. AHW, AKQ, APE, AUA										9.8120 C30		4.9575
1.4 16V	Petrol	74	08/99-07/05	**AFK, ANM, AQQ, AUB**								
All engines										9.8120 C30		
Eng. AFK, AQQ, AUB												4.9575
1.6 GTI	Petrol	92	09/00-07/05	**AVY**								
All engines										9.8120 C30		4.9575
MULTIVAN												
1.4 e-Hybrid	Petrol/ Electric	110	08/21->	**DGEA**								
All engines				x 4, ELDOR, COIL ON PLUG, incl. spark plug connector						9.6499 C10		
1.4 e-Hybrid	Petrol/ Electric	160	08/21->	**DGEA**								
All engines				x 4, ELDOR, COIL ON PLUG, incl. spark plug connector						9.6499 C10		

A10	CONDENSER	**A20**	CONTACT SET	**A40**	DISTRIBUTOR CAP	**A50**	ROTOR	**A70**	PICK-UP
C10	COIL	**C20**	IGNITION MODULE	**C30**	ELECTRONIC IGNITION KIT	**E01**	IGNITION CABLE SET		

The present application list is a brief version. For the detailed information about the possibility of installation on a specific vehicle, please refer to our web-catalogue http://catalogo.facet.eu/

Vehicle	alim.	kW	Date	Engine	FUNCTIONS ON THE VEHICLE: A10	A20	A40	A50	A70	C10 - C30	C20	E01
2.0	Petrol	85	11/03-08/15	AXA						9.8120 C30		4.9585
2.0 TSI	Petrol	110	07/12-07/19	CJKB						9.6326 C10		
2.0 TSI	Petrol	150	05/11->	CJKA, DRNB						9.6326 C10		
2.0 TSI 4motion	Petrol	150	07/11-07/19	CJKA						9.6326 C10		
3.2 V6	Petrol	170	02/04-06/04	BDL						9.6334 C10		
3.2 V6	Petrol	173	02/04-12/09	BKK, CFLA						9.6334 C10		
3.2 V6 4motion	Petrol	173	07/04-12/09	BKK, CFLA						9.6334 C10		
NEW BEETLE												
1.4	Petrol	55	11/01-09/10	BCA						9.6374 C10		
1.6	Petrol	74	10/99-09/00	AWH						9.8120 C30		4.9585
1.6	Petrol	75	06/00-09/10	AYD, BFS						9.8120 C30		4.9585
1.8 T	Petrol	110	10/99-09/10	0D19TCIE2, AGU, APH, AVC, AWU, AWV, BKF								
1.8 T	Petrol	132	11/01-06/05	AWP, BNU						9.6329 C10		

Engine	Information	A10	A20	A40	A50	A70	C10 - C30	C20	E01
All engines							9.8120 C30		4.9585
All engines	x 4, ELDOR, Housing Colour:Black, COIL ON PLUG, incl. spark plug connector						9.6326 C10		
Eng. CJKA	x 4, ELDOR, Housing Colour:Black, COIL ON PLUG, incl. spark plug connector						9.6326 C10		
Eng. DRNB	x 4, HITACHI, COIL ON PLUG, incl. spark plug connector						9.6536 C10		
All engines	x 4, ELDOR, Housing Colour:Black, COIL ON PLUG, incl. spark plug connector						9.6326 C10		
All engines	x 6, COIL ON PLUG						9.6334 C10		
All engines	x 6, COIL ON PLUG						9.6334 C10		
All engines	x 6, COIL ON PLUG						9.6334 C10		
All engines	x 4, COIL ON PLUG, incl. spark plug connector						9.6374 C10		
All engines							9.8120 C30		4.9585
All engines							9.8120 C30		4.9585
Eng. AGU, APH, AVC, AWU, AWV, BKF	01/05/00 ->, x 4, ch. 1C1400001 ->, COIL ON PLUG, incl. spark plug connector, x 4, COIL ON PLUG, incl. spark plug connector						9.6329 C10		
Eng. BKF	Qty: 4						9.6329 C10		
Eng. AGU, APH, AVC, AWU, AWV	->year 01/04/00, ->ch. 1CY499999, x 4, COIL ON PLUG, incl. spark plug connector						9.6345 C10		
Eng. 0D19TCIE2, AVC, AWV								9.4076	
All engines	x 4, COIL ON PLUG, incl. spark plug connector						9.6329 C10		

A10	CONDENSER	A20	CONTACT SET	A40	DISTRIBUTOR CAP	A50	ROTOR	A70	PICK-UP
C10	COIL	C20	IGNITION MODULE	C30	ELECTRONIC IGNITION KIT	E01	IGNITION CABLE SET		

The present application list is a brief version. For the detailed information about the possibility of installation on a specific vehicle, please refer to our web-catalogue http://catalogo.facet.eu/

Vehicle	alim.	kW	Date	Engine	FUNCTIONS ON THE VEHICLE A10	A20	A40	A50	A70	C10 - C30	C20	E01
2.0	Petrol	85	01/98-10/10	ENGINE AEG, APK, AQY, AZG, AZJ, BDC, BEJ, BER, BEV, BGD, BHP, CBPA								
Eng. AEG, APK, AQY, BER										9.8120 C30		
Eng. AQY										9.8120 C30		
Eng. AZG, AZJ, BDC, BEJ, BER, BEV, BGD, BHP			->year 30/06/05									4.7223
Eng. AEG, APK, AQY, BER, BHP, CBPA			01/07/05 ->									4.9585
2.3 V5	Petrol	125	10/00-09/10	ENGINE AQN								
All engines			x 5, COIL ON PLUG							9.6335 C10		
2.5	Petrol	110	07/05-09/10	ENGINE BPR, BPS								
All engines			->ch. 1C8518695, ch. 1C8518696 ->, ch. 1Y7418899 ->, ch. 1Y8418407 ->, ->ch. 1Y8418406, x 5, COIL ON PLUG, ELDOR, x 5, COIL ON PLUG, Housing Colour:Black, COIL ON PLUG, incl. spark plug connector						9.6326 C10		
3.2 RSI 4motion	Petrol	165	04/00-05/01	ENGINE AXJ								
All engines			x 6, COIL ON PLUG							9.6335 C10		
PASSAT												
1.4 TSi BlueMotion	Petrol	90	08/10-12/14	ENGINE CAXA								
All engines			x 4, COIL ON PLUG, incl. spark plug connector							9.6374 C10		
1.8 TFSi	Petrol	118	08/10-12/14	ENGINE CDAA								
All engines			x 4, ELDOR, Housing Colour:Black, COIL ON PLUG, incl. spark plug connector							9.6326 C10		
2.0 TFSI	Petrol	155	11/10-12/14	ENGINE CCZB								
All engines			x 4, ELDOR, Housing Colour:Black, COIL ON PLUG, incl. spark plug connector							9.6326 C10		
PASSAT CC												
1.4 TSI MultiFuel	Petrol/ Ethanol	118	01/11-01/12	ENGINE CKMA								
All engines			x 4, COIL ON PLUG, incl. spark plug connector							9.6374 C10		
1.8 TSI	Petrol	112	11/08-05/10	ENGINE CDAB, CGYA								
All engines			x 4, ELDOR, Housing Colour:Black, COIL ON PLUG, incl. spark plug connector							9.6326 C10		
1.8 TSI	Petrol	118	06/08-01/12	ENGINE BZB, CDAA								
All engines			x 4, ELDOR, Housing Colour:Black, COIL ON PLUG, incl. spark plug connector							9.6326 C10		
2.0 TFSI	Petrol	147	06/08-01/12	ENGINE CAWB, CBFA, CCTA, CCZA								
Eng. CAWB, CBFA, CCZA			x 4, ELDOR, Housing Colour:Black, COIL ON PLUG, incl. spark plug connector							9.6326 C10		
Eng. CCTA			Qty: 4							9.6326 C10		
2.0 TSI	Petrol	155	11/10-01/12	ENGINE CCZB								
All engines			x 4, ELDOR, Housing Colour:Black, COIL ON PLUG, incl. spark plug connector							9.6326 C10		

A10	CONDENSER	A20	CONTACT SET	A40	DISTRIBUTOR CAP	A50	ROTOR	A70	PICK-UP
C10	COIL	C20	IGNITION MODULE	C30	ELECTRONIC IGNITION KIT	E01	IGNITION CABLE SET		

The present application list is a brief version. For the detailed information about the possibility of installation on a specific vehicle, please refer to our web-catalogue http://catalogo.facet.eu/

Vehicle	alim.	kW	Date	Engine	FUNCTIONS ON THE VEHICLE: A10	A20	A40	A50	A70	C10 - C30	C20	E01

PASSAT II

Vehicle	alim.	kW	Date	ENGINE
1.3	Petrol	44	08/80-07/86	79SU16

Engine	Information	A10	A20	A40	A50	A70	C10 - C30		C20	E01
All engines	version Bosch			2.7479PHT	3.7556RS					
All engines							9.6032	C10	9.4004	

Vehicle	alim.	kW	Date	ENGINE
1.6	Petrol	55	08/80-03/88	DT

Engine	Information	A10	A20	A40	A50	A70	C10 - C30		C20	E01
All engines	version Bosch, ->year 31/12/84			2.7479PHT						
All engines	version Bosch, 01/01/85 ->			2.7494PHT						
All engines	version Ducellier, 01/01/85 ->			2.7668PHT						
All engines	version Bosch				3.7555RS					
All engines	version Ducellier				3.7699RS					
All engines	01/01/85 ->						9.6025	C10		
All engines	->year 31/12/84						9.6032	C10		
All engines									9.4004	

Vehicle	alim.	kW	Date	ENGINE
1.8	Petrol	66	01/83-03/88	DS

Engine	Information	A10	A20	A40	A50	A70	C10 - C30		C20	E01
All engines	version Bosch			2.7494PHT	3.7555RS					
All engines	version Ducellier			2.7668PHT	3.7699RS					
All engines							9.6025	C10	9.4004	

Vehicle	alim.	kW	Date	ENGINE
1.8 Syncro	Petrol	66	01/86-03/88	DS

Engine	Information	A10	A20	A40	A50	A70	C10 - C30		C20	E01
All engines	version Bosch			2.7494PHT	3.7555RS					
All engines	version Ducellier			2.7668PHT	3.7699RS					
All engines							9.6025	C10	9.4004	

Vehicle	alim.	kW	Date	ENGINE
1.9	Petrol	85	01/81-07/83	WN

Engine	Information	A10	A20	A40	A50	A70	C10 - C30		C20	E01
All engines	version Bosch			2.7493PHT	3.7559RS					
All engines							9.6032	C10	9.4004	

Vehicle	alim.	kW	Date	ENGINE
2.0	Petrol	85	08/83-03/88	JS

Engine	Information	A10	A20	A40	A50	A70	C10 - C30		C20	E01
All engines	version Bosch			2.7530/1PHT	3.7555RS, 3.7573/16RS					
All engines	version Bosch, 01/01/88 ->					8.2719				
All engines							9.6025	C10	9.4004	

Vehicle	alim.	kW	Date	ENGINE
2.0 Syncro	Petrol	85	05/84-03/88	JS

Engine	Information	A10	A20	A40	A50	A70	C10 - C30		C20	E01
All engines	version Bosch			2.7530/1PHT	3.7555RS, 3.7573/16RS					
All engines	version Bosch, 01/01/88 ->					8.2719				
All engines							9.6025	C10	9.4004	

Vehicle	alim.	kW	Date	ENGINE
2.2	Petrol	85	01/85-03/88	KX

Engine	Information	A10	A20	A40	A50	A70	C10 - C30		C20	E01
All engines	version Bosch			2.7493PHT	3.7555RS					
All engines							9.6032	C10	9.4004	

PASSAT III

Vehicle	alim.	kW	Date	ENGINE
1.6	Petrol	55	04/88-07/92	1F, ABN, EZ

Engine	Information	A10	A20	A40	A50	A70	C10 - C30		C20	E01
Eng. 1F, EZ	version Bosch, ->ch. 31-M-280 000			2.7494PHT						
All engines	version Bosch, ch. 31-M-280 001 ->			2.7530/36PHT						
All engines	version Bosch				3.7555RS					
Eng. 1F, EZ	version Bosch					8.2719				
Eng. 1F, EZ	ch. 31-L-000 001 ->, ->ch. 31-M-240 000						9.6025	C10		
Eng. 1F, EZ	->ch. 31-K-400 000						9.6026	C10		
Eng. 1F, EZ	ch. 31-M-240 001 ->						9.6059	C10		

A10	CONDENSER	A20	CONTACT SET	A40	DISTRIBUTOR CAP	A50	ROTOR	A70	PICK-UP
C10	COIL	C20	IGNITION MODULE	C30	ELECTRONIC IGNITION KIT	E01	IGNITION CABLE SET		

The present application list is a brief version. For the detailed information about the possibility of installation on a specific vehicle, please refer to our web-catalogue http://catalogo.facet.eu/

Vehicle	alim.	kW	Date	Engine	FUNCTIONS ON THE VEHICLE A10	A20	A40	A50	A70	C10 - C30	C20	E01

PASSAT III

				ENGINE
1.6	Petrol	55	04/88-07/92	1F, ABN, EZ

Engine	Information	A10	A20	A40	A50	A70	C10 - C30	C20	E01
All engines	pole nr. 3						9.8114 C30		
All engines	pole nr. 6						9.8116 C30		
Eng. 1F, EZ	->ch. 31-M-240 000							9.4007	
All engines									4.8725

				ENGINE
1.6	Petrol	74	07/94-08/96	AEK, AFT

Engine	Information	A10	A20	A40	A50	A70	C10 - C30	C20	E01
All engines	version Bosch			2.7530/36PHT	3.7573/21RS				
Eng. AEK	version Ducellier			2.7668PHT	3.7699RS				
All engines							9.8114 C30		
Eng. AEK									4.9551
Eng. AFT									4.9932

				ENGINE
1.8	Petrol	102	08/91-09/93	KR

Engine	Information	A10	A20	A40	A50	A70	C10 - C30	C20	E01
All engines	version Bosch			2.7530/36PHT	3.7573/21RS	8.2723			
All engines	ch. 31-L-000 001 ->						9.6025 C10		
All engines	->ch. 31-K-400 000						9.6026 C10		
All engines								9.4007	

				ENGINE
1.8	Petrol	55	08/90-05/97	AAM

Engine	Information	A10	A20	A40	A50	A70	C10 - C30	C20	E01
All engines	version Bosch			2.7530/36PHT	3.7573/21RS				
All engines	version Ducellier			2.7668PHT	3.7699RS				
All engines	pole nr. 3						9.8114 C30		
All engines	pole nr. 6						9.8116 C30		
All engines	->year 30/09/93								4.8725
All engines	01/10/93 ->								4.8965

				ENGINE
1.8	Petrol	66	02/88-05/97	ABS, ADZ, RP

Engine	Information	A10	A20	A40	A50	A70	C10 - C30	C20	E01
All engines	version Bosch			2.7530/36PHT					
Eng. ABS, ADZ	version Ducellier			2.7668PHT	3.7699RS				
Eng. RP	version Bosch, ->ch. 31-L-400 000				3.7555RS				
All engines	version Bosch, ch. 31-L-400 001 ->				3.7573/21RS				
Eng. RP	version Bosch					8.2719			
Eng. RP							9.6025 C10		
All engines	pole nr. 3						9.8114 C30		
Eng. RP	pole nr. 6						9.8116 C30		
Eng. ABS, RP	->year 30/09/93								4.8725
Eng. ABS, ADZ	01/10/93 ->								4.8965

				ENGINE
1.8	Petrol	79	04/88-07/93	PF

Engine	Information	A10	A20	A40	A50	A70	C10 - C30	C20	E01
All engines	version Bosch, ch. 31-L-160 001 ->			2.7494PHT					
All engines	version Bosch, ->ch. 31-L-160 000			2.7530/36PHT					
All engines	version Bosch				3.7573/21RS				
All engines							9.6025 C10	9.4007	4.8725

				ENGINE
1.8	Petrol	82	04/88-07/92	PB

Engine	Information	A10	A20	A40	A50	A70	C10 - C30	C20	E01
All engines	version Bosch, ch. 31-L-160 001 ->			2.7494PHT					
All engines	version Bosch, ->ch. 31-L-160 000			2.7530/36PHT					
All engines	version Bosch				3.7573/21RS				
All engines							9.6025 C10	9.4007	4.8725

				ENGINE
1.8 16V	Petrol	100	04/88-12/89	KR

Engine	Information	A10	A20	A40	A50	A70	C10 - C30	C20	E01
All engines	version Bosch			2.7530/36PHT	3.7573/21RS	8.2723			

A10	CONDENSER	A20	CONTACT SET	A40	DISTRIBUTOR CAP	A50	ROTOR	A70	PICK-UP
C10	COIL	C20	IGNITION MODULE	C30	ELECTRONIC IGNITION KIT	E01	IGNITION CABLE SET		

The present application list is a brief version. For the detailed information about the possibility of installation on a specific vehicle, please refer to our web-catalogue http://catalogo.facet.eu/

Vehicle	alim.	kW	Date	Engine	FUNCTIONS ON THE VEHICLE A10	A20	A40	A50	A70	C10 - C30	C20	E01
1.8 16V	Petrol	100	04/88-12/89	KR								

Engine	Information	A10	A20	A40	A50	A70	C10 - C30		C20	E01
All engines	ch. 31-L-000 001 ->						9.6025	C10		
All engines	->ch. 31-K-400 000						9.6026	C10		
All engines									9.4007	

Vehicle	alim.	kW	Date	Engine
1.8 G60 Syncro	Petrol	118	08/88-05/97	PG

Engine	Information	A10	A20	A40	A50	A70	C10 - C30		C20	E01
All engines							9.6025	C10		4.8725

Vehicle	alim.	kW	Date	Engine
1.8 GL	Petrol	102	08/91-09/93	KR

Engine	Information	A10	A20	A40	A50	A70	C10 - C30		C20	E01
All engines	version Bosch			2.7530/36PHT	3.7573/21RS	8.2723				
All engines	ch. 31-L-000 001 ->						9.6025	C10		
All engines	->ch. 31-K-400 000						9.6026	C10		
All engines									9.4007	

Vehicle	alim.	kW	Date	Engine
2.0	Petrol	79	03/95-08/96	AEP

Engine	Information	A10	A20	A40	A50	A70	C10 - C30		C20	E01
All engines	version Bosch			2.7530/36PHT	3.7573/21RS					
All engines							9.8114	C30		4.8965

Vehicle	alim.	kW	Date	Engine
2.0	Petrol	85	02/90-05/97	2E, ADY, AGG

Engine	Information	A10	A20	A40	A50	A70	C10 - C30		C20	E01
Eng. 2E	version Bosch, ->ch. 31-M-280 000			2.7494PHT						
All engines	version Bosch, ch. 31-M-280 001 ->			2.7530/36PHT						
All engines	version Bosch				3.7573/21RS					
Eng. 2E							9.6059	C10		
All engines							9.8114	C30		
Eng. 2E	->year 30/09/93									4.8725
All engines	01/10/93 ->									4.8965

Vehicle	alim.	kW	Date	Engine
2.0 16V	Petrol	100	08/88-09/93	7TZ220XS560

Engine	Information	A10	A20	A40	A50	A70	C10 - C30		C20	E01
All engines	version Bosch			2.7530/36PHT	3.7573/21RS					

Vehicle	alim.	kW	Date	Engine
2.0 16V	Petrol	110	01/94-05/97	ABF

Engine	Information	A10	A20	A40	A50	A70	C10 - C30		C20	E01
All engines	version Bosch			2.7530/33PHT	3.7573/21RS					
All engines							9.8114	C30		

Vehicle	alim.	kW	Date	Engine
2.0 Syncro	Petrol	85	03/90-12/96	2E, ADY, AGG

Engine	Information	A10	A20	A40	A50	A70	C10 - C30		C20	E01
Eng. 2E	version Bosch, ->ch. 31-M-280 000			2.7494PHT						
All engines	version Bosch, ch. 31-M-280 001 ->			2.7530/36PHT						
All engines	version Bosch				3.7573/21RS					
All engines							9.8114	C30		
Eng. 2E	->year 30/09/93									4.8725
All engines	01/10/93 ->									4.8965

Vehicle	alim.	kW	Date	Engine
2.0i	Petrol	78	08/92-12/96	ACX

Engine	Information	A10	A20	A40	A50	A70	C10 - C30		C20	E01
All engines	version Bosch			2.7530/36PHT	3.7573/21RS					
All engines							9.8114	C30		4.8725

Vehicle	alim.	kW	Date	Engine
2.8 VR6	Petrol	128	06/91-05/97	AAA

Engine	Information	A10	A20	A40	A50	A70	C10 - C30		C20	E01
All engines	->year 31/07/93, version Bosch			2.7530/3PHT						
All engines	->ch. 31-N-240 000, version Bosch				3.7573/48RS					
All engines	ch. 31-N-240 001 ->, version Bosch				3.7573/49RS					
All engines	->ch. 31-P-136 398						9.6169	C10		

A10	CONDENSER	A20	CONTACT SET	A40	DISTRIBUTOR CAP	A50	ROTOR	A70	PICK-UP
C10	COIL	C20	IGNITION MODULE	C30	ELECTRONIC IGNITION KIT	E01	IGNITION CABLE SET		

The present application list is a brief version. For the detailed information about the possibility of installation on a specific vehicle, please refer to our web-catalogue http://catalogo.facet.eu/

Vehicle	alim.	kW	Date	Engine	FUNCTIONS ON THE VEHICLE A10	A20	A40	A50	A70	C10 - C30	C20	E01

PASSAT IV

				ENGINE
1.6	Petrol	74	10/96-11/00	ADP, AHL, ANA, ARM

Engine	Information	A10	A20	A40	A50	A70	C10 - C30		C20	E01
Eng. ADP	version Bosch			2.7530/36PHT	3.7573/21RS	8.2723				
Eng. ADP	version Ducellier			2.7668PHT	3.7699RS					
Eng. AHL, ANA, ARM							9.8120	C30		4.9585
Eng. ADP										4.9353

				ENGINE
1.6	Petrol	75	11/00-05/05	ALZ

Engine	Information	A10	A20	A40	A50	A70	C10 - C30		C20	E01
All engines							9.8120	C30		4.9585

				ENGINE
1.8	Petrol	85	01/97-11/00	AFY

Engine	Information	A10	A20	A40	A50	A70	C10 - C30		C20	E01
All engines										4.9491

				ENGINE
1.8	Petrol	92	10/96-03/05	ADR, APT, ARG

Engine	Information	A10	A20	A40	A50	A70	C10 - C30		C20	E01
All engines										4.9491

				ENGINE
1.8 [CHN]	Petrol	110	06/01->	AWL

Engine	Information	A10	A20	A40	A50	A70	C10 - C30		C20	E01
All engines	Qty: 4						9.6329	C10		

				ENGINE
1.8 [CHN]	Petrol	92	03/00-12/03	ANQ

Engine	Information	A10	A20	A40	A50	A70	C10 - C30		C20	E01
All engines	Qty: 4						9.6345	C10		

				ENGINE
1.8 4motion	Petrol	125	03/01-05/05	AWM

Engine	Information	A10	A20	A40	A50	A70	C10 - C30		C20	E01
All engines	Qty: 4						9.6329	C10		
All engines	x 4, COIL ON PLUG, incl. spark plug connector						9.6329	C10		

				ENGINE
1.8 Syncro/4motion	Petrol	92	12/96-11/00	ADR, APT, ARG

Engine	Information	A10	A20	A40	A50	A70	C10 - C30		C20	E01
All engines										4.9491

				ENGINE
1.8 T	Petrol	110	10/96-11/00	AEB, ANB, APU

Engine	Information	A10	A20	A40	A50	A70	C10 - C30		C20	E01
All engines	x 4, COIL ON PLUG						9.6254S	C10		
All engines	ch. 3B-W-045 001 ->								9.4072	
Eng. AEB	->ch. 3B-W-045 000								9.4076	

				ENGINE
1.8 T	Petrol	125	02/01-11/05	AWM

Engine	Information	A10	A20	A40	A50	A70	C10 - C30		C20	E01
All engines	x 4, COIL ON PLUG, incl. spark plug connector						9.6329	C10		

				ENGINE
1.8 T 20V	Petrol	110	11/00-05/05	AWL, AWT

Engine	Information	A10	A20	A40	A50	A70	C10 - C30		C20	E01
Eng. AWL	Qty: 4						9.6329	C10		
Eng. AWT	x 4, COIL ON PLUG, incl. spark plug connector						9.6329	C10		

				ENGINE
1.8 T 4motion	Petrol	125	11/03-05/05	AWM

Engine	Information	A10	A20	A40	A50	A70	C10 - C30		C20	E01
All engines	x 4, COIL ON PLUG, incl. spark plug connector						9.6329	C10		

				ENGINE
1.8 T Syncro	Petrol	110	11/96-08/00	AEB

Engine	Information	A10	A20	A40	A50	A70	C10 - C30		C20	E01
All engines	incl. spark plug connector, Qty: 4						9.6254	C10		
All engines	without spark plug connector, Qty: 4						9.6254S	C10		

A10	CONDENSER	A20	CONTACT SET	A40	DISTRIBUTOR CAP	A50	ROTOR	A70	PICK-UP
C10	COIL	C20	IGNITION MODULE	C30	ELECTRONIC IGNITION KIT	E01	IGNITION CABLE SET		

The present application list is a brief version. For the detailed information about the possibility of installation on a specific vehicle, please refer to our web-catalogue http://catalogo.facet.eu/

Vehicle	alim.	kW	Date	Engine	FUNCTIONS ON THE VEHICLE A10	A20	A40	A50	A70	C10 - C30	C20	E01
1.8 T Syncro	Petrol	110	11/96-08/00	**AEB**								
Engine	Information											
All engines	ch. 3B-W-045 001 ->										9.4072	
All engines	->ch. 3B-W-045 000										9.4076	
2.0	Petrol	85	11/00-05/05	**AZM, BFF**								
Engine	Information											
Eng. AZM										9.8120 C30		
Eng. BFF										9.8120 C30		
All engines												4.9585
2.0	Petrol	96	11/01-05/05	**ALT**								
Engine	Information											
All engines	x 4, COIL ON PLUG, incl. spark plug connector									9.6329 C10		
2.0 [CHN]	Petrol	85	06/03->	**BFF**								
Engine	Information											
All engines										9.8120 C30		4.9585
2.0 4motion	Petrol	85	11/00-05/05	**AZM**								
Engine	Information											
All engines										9.8120 C30		4.9585
2.3 V5	Petrol	125	11/00-05/05	**AZX**								
Engine	Information											
All engines	x 1, D.I.S.									9.6337 C10		
2.3 V5 4motion	Petrol	125	11/00-05/05	**AZX**								
Engine	Information											
All engines	x 1, D.I.S.									9.6337 C10		
2.3 VR5	Petrol	110	10/96-11/00	**AGZ**								
Engine	Information											
All engines											9.4074	
2.3 VR5	Petrol	125	11/00-05/05	**AZX**								
Engine	Information											
All engines	x 1, D.I.S.									9.6337 C10		
2.3 VR5 4motion	Petrol	125	11/00-05/05	**AZX**								
Engine	Information											
All engines	x 1, D.I.S.									9.6337 C10		
2.3 VR5 Syncro/4motion	Petrol	110	10/97-11/00	**AGZ**								
Engine	Information											
All engines											9.4074	
PASSAT V												
1.4 TSI	Petrol	118	11/12-12/14	**CTHD**								
Engine	Information											
All engines	x 4, COIL ON PLUG, incl. spark plug connector									9.6374 C10		
1.4 TSI	Petrol	90	05/07-12/14	**CAXA**								
Engine	Information											
All engines	x 4, COIL ON PLUG, incl. spark plug connector									9.6374 C10		

A10	CONDENSER	**A20**	CONTACT SET	**A40**	DISTRIBUTOR CAP	**A50**	ROTOR	**A70**	PICK-UP
C10	COIL	**C20**	IGNITION MODULE	**C30**	ELECTRONIC IGNITION KIT	**E01**	IGNITION CABLE SET		

The present application list is a brief version. For the detailed information about the possibility of installation on a specific vehicle, please refer to our web-catalogue http://catalogo.facet.eu/

Vehicle	alim.	kW	Date	Engine	FUNCTIONS ON THE VEHICLE A10	A20	A40	A50	A70	C10 - C30	C20	E01
1.4 TSI EcoFuel	Petrol/ Com-pressed Natural Gas (CNG)	110	01/09-12/14	**CDGA**								

Engine	Information	A10	A20	A40	A50	A70	C10 - C30		C20	E01
All engines	x 4, COIL ON PLUG, incl. spark plug connector						9.6374	C10		

1.4 TSI MultiFuel	Petrol/ Ethanol	118	11/10-12/14	CKMA

Engine	Information	A10	A20	A40	A50	A70	C10 - C30		C20	E01
All engines	x 4, COIL ON PLUG, incl. spark plug connector						9.6374	C10		

1.6	Petrol	75	05/05-11/10	BSE, BSF

Engine	Information	A10	A20	A40	A50	A70	C10 - C30		C20	E01
All engines							9.8120	C30		4.9585

1.6 FSI	Petrol	85	03/05-06/08	BLF

Engine	Information	A10	A20	A40	A50	A70	C10 - C30		C20	E01
All engines	x 4, COIL ON PLUG, incl. spark plug connector						9.6374	C10		

1.8 TSI	Petrol	112	11/09-12/14	CDAB, CGYA

Engine	Information	A10	A20	A40	A50	A70	C10 - C30		C20	E01
All engines	x 4, ELDOR, Housing Colour:Black, COIL ON PLUG, incl. spark plug connector						9.6326	C10		

1.8 TSI	Petrol	118	05/07-12/14	BZB, CDAA

Engine	Information	A10	A20	A40	A50	A70	C10 - C30		C20	E01
All engines	x 4, ELDOR, Housing Colour:Black, COIL ON PLUG, incl. spark plug connector						9.6326	C10		

1.8 TSI	Petrol	125	06/13->	CPKA, CPRA

Engine	Information	A10	A20	A40	A50	A70	C10 - C30		C20	E01
All engines	Qty: 4, version NAR						9.6536	C10		

2.0 FSI	Petrol	110	03/05-11/10	BLR, BLY, BVY, BVZ

Engine	Information	A10	A20	A40	A50	A70	C10 - C30		C20	E01
All engines	x 4, ELDOR, Housing Colour:Black, COIL ON PLUG, incl. spark plug connector						9.6326	C10		

2.0 FSI	Petrol	125	08/07-11/10	CCTB

Engine	Information	A10	A20	A40	A50	A70	C10 - C30		C20	E01
All engines	Qty: 4						9.6326	C10		
All engines	x 4, ELDOR, Housing Colour:Black, COIL ON PLUG, incl. spark plug connector						9.6326	C10		

2.0 FSI 4motion	Petrol	110	09/05-11/10	BLX, BLY, BVX

Engine	Information	A10	A20	A40	A50	A70	C10 - C30		C20	E01
All engines	x 4, ELDOR, Housing Colour:Black, COIL ON PLUG, incl. spark plug connector						9.6326	C10		

2.0 TFSI	Petrol	147	07/05-11/10	AXX, BPY, BWA, CAWB

Engine	Information	A10	A20	A40	A50	A70	C10 - C30		C20	E01
All engines	x 4, ELDOR, Housing Colour:Black, COIL ON PLUG, incl. spark plug connector						9.6326	C10		

2.0 TSI	Petrol	155	11/10-12/15	CCZB

Engine	Information	A10	A20	A40	A50	A70	C10 - C30		C20	E01
All engines	x 4, ELDOR, Housing Colour:Black, COIL ON PLUG, incl. spark plug connector						9.6326	C10		

2.0 TSI 4motion	Petrol	155	01/12-12/14	CCZB

Engine	Information	A10	A20	A40	A50	A70	C10 - C30		C20	E01
All engines	x 4, ELDOR, Housing Colour:Black, COIL ON PLUG, incl. spark plug connector						9.6326	C10		

A10	CONDENSER	A20	CONTACT SET	A40	DISTRIBUTOR CAP	A50	ROTOR	A70	PICK-UP
C10	COIL	C20	IGNITION MODULE	C30	ELECTRONIC IGNITION KIT	E01	IGNITION CABLE SET		

The present application list is a brief version. For the detailed information about the possibility of installation on a specific vehicle, please refer to our web-catalogue http://catalogo.facet.eu/

Vehicle	alim.	kW	Date	Engine	FUNCTIONS ON THE VEHICLE A10	A20	A40	A50	A70	C10 - C30	C20	E01
2.5 SRE	Petrol	125	01/11->	ENGINE: CBTA, CBUA, CCCA								
Engine: All engines	Information: Qty: 5									9.6326 C10		
3.2 FSI 4motion	Petrol	184	11/05-11/10	ENGINE: AXZ								
Engine: All engines	Information: 01/05/07 ->, ->year 01/04/08, ->ch. 3C8270000, x 6, COIL ON PLUG, incl. spark plug connector									9.6334 C10		
3.6 FSI	Petrol	206	06/05-11/10	ENGINE: BLV								
Engine: All engines	Information: ->ch. 3C-8-270 000, Qty: 6									9.6334 C10		
3.6 FSI 4motion	Petrol	206	09/05-11/10	ENGINE: BLV								
Engine: All engines	Information: ->ch. 3C-8-270 000, Qty: 6									9.6334 C10		
3.6 R36 4motion	Petrol	220	04/07-11/10	ENGINE: BWS								
Engine: All engines	Information: ->year 01/04/08, ->ch. 3C8270000, x 6, COIL ON PLUG, x 6, COIL ON PLUG, incl. spark plug connector, incl. spark plug connector									9.6334 C10		
PASSAT VI												
1.4 GTE Hybrid	Petrol/ Electric	115	06/15->	ENGINE: CUKC, DGEB								
Engine: All engines	Information: x 4, BERU, ELDOR, COIL ON PLUG, incl. spark plug connector, Number of pins:4, incl. spark plug connector									9.6499 C10		
1.4 TSI	Petrol	110	11/14->	ENGINE: CZDA, CZEA								
Engine: All engines	Information: x 4, BERU, ELDOR, HITACHI, COIL ON PLUG, incl. spark plug connector, Number of pins:4, incl. spark plug connector									9.6499 C10		
1.4 TSI	Petrol	92	11/14->	ENGINE: CZCA								
Engine: All engines	Information: x 4, BERU, ELDOR, COIL ON PLUG, incl. spark plug connector, Number of pins:4, incl. spark plug connector									9.6499 C10		
1.4 TSI 4motion	Petrol	110	02/15->	ENGINE: CZEA								
Engine: All engines	Information: x 4, BERU, ELDOR, COIL ON PLUG, incl. spark plug connector, Number of pins:4, incl. spark plug connector									9.6499 C10		
1.8 TSI	Petrol	132	02/15->	ENGINE: CJSA, CJSC								
Engine: All engines	Information: x 4, HITACHI, COIL ON PLUG, incl. spark plug connector									9.6536 C10		
2.0 TSI	Petrol	140	11/18->	ENGINE: CZPB, DKZA, DRFA								
Engine: All engines	Information: x 4, HITACHI, COIL ON PLUG, incl. spark plug connector									9.6536 C10		
2.0 TSI	Petrol	162	08/14->	ENGINE: CXDA								
Engine: All engines	Information: x 4, BERU, COIL ON PLUG, incl. spark plug connector									9.6536 C10		
PHAETON												
3.2 V6	Petrol	177	04/02-05/05	ENGINE: AYT, BKL								
Engine: All engines	Information: x 6, COIL ON PLUG									9.6334 C10		

A10	CONDENSER	**A20**	CONTACT SET	**A40**	DISTRIBUTOR CAP	**A50**	ROTOR	**A70**	PICK-UP
C10	COIL	**C20**	IGNITION MODULE	**C30**	ELECTRONIC IGNITION KIT	**E01**	IGNITION CABLE SET		

The present application list is a brief version. For the detailed information about the possibility of installation on a specific vehicle, please refer to our web-catalogue http://catalogo.facet.eu/

Vehicle	alim.	kW	Date	Engine	FUNCTIONS ON THE VEHICLE: A10	A20	A40	A50	A70	C10 - C30	C20	E01
3.2 V6 4motion	Petrol	177	02/04-11/08	ENGINE: BKL, BRK						9.6334 C10		
4.2 V8 4motion	Petrol	246	05/03-03/16	ENGINE: BGH, BGJ						9.6325 C10		

Engine	Information	A10	A20	A40	A50	A70	C10 - C30	C20	E01
All engines	x 6, COIL ON PLUG						9.6334 C10		
All engines	x 8, COIL ON PLUG						9.6325 C10		

POLO II

Vehicle	alim.	kW	Date	Engine
1.0	Petrol	29	10/81-10/86	GL
1.0	Petrol	33	01/85-09/94	AAK, AAU, HZ
1.0 Cat	Petrol	33	08/89-09/94	AAK, AAU, ACM
1.1	Petrol	37	10/81-09/89	HB
1.3	Petrol	37	08/83-07/85	HW

Engine	Information	A10	A20	A40	A50	A70	C10 - C30	C20	E01
All engines	version Bosch	0.0179/96	1.2549HDVS		3.7573/14RS				
All engines	version Bosch, ->ch. 86-E-150 000			2.7479PHT					
All engines	version Bosch, ch. 86-E-150 001 ->			2.7494PHT					
All engines	version Bosch, +catalytic converter				3.7556RS				
All engines	ch. ..-E-150 001 ->, ->ch. 80-K-140 000								4.8493
Eng. AAU, HZ	version Bosch, ->ch. 80-M-100 000			2.7494PHT					
Eng. AAU, HZ	version Bosch, ch. 80-M-100 001 ->			2.7530/36PHT					
Eng. AAK, HZ	version Bosch				3.7556RS				
Eng. AAU	version Bosch				3.7573/21RS	8.2723			
Eng. AAK, HZ	version Bosch, ->ch. 80-M-100 000					8.2693			
Eng. HZ	version Bosch, ch. 80-M-100 001 ->					8.2734			
Eng. AAK, HZ	ch. ..-G-000 001 ->, ->ch. 80-H-220 000, ch. 80-L-000 001 ->, ->year 30/09/90						9.6025 C10		
Eng. HZ	ch. 80-J-000 001 ->, ->ch. 80-K-220 000						9.6026 C10		
Eng. AAU, HZ	01/10/90 ->, pole nr. 3						9.8114 C30		
Eng. HZ	01/10/90 ->, pole nr. 6						9.8116 C30		
Eng. HZ	->ch. ..-H-060 000							9.4004	
Eng. AAK, HZ	ch. ..-H-060 001 ->							9.4007	
Eng. AAK, HZ	ch. ..-E-150 001 ->, ->ch. 80-K-140 000								4.8493
Eng. AAU, HZ	ch. 80-P-320 001 ->								4.9364
Eng. AAU, HZ	01/10/90 ->, ->ch. 80-P-320 000								4.9518
Eng. AAK, AAU	version Bosch, ->ch. 80-M-100 000			2.7494PHT					
Eng. AAU, ACM	version Bosch, ch. 80-M-100 001 ->			2.7530/36PHT					
Eng. AAK, ACM	version Bosch				3.7556RS				
Eng. AAU	version Bosch				3.7573/21RS	8.2723			
Eng. AAK	version Bosch					8.2693			
Eng. ACM	version Bosch					8.2734			
Eng. AAK							9.6025 C10	9.4007	
Eng. AAU, ACM	pole nr. 3						9.8114 C30		
Eng. ACM	pole nr. 6						9.8116 C30		
Eng. AAK	ch. ..-E-150 001 ->, ->ch. 80-K-140 000								4.8493
Eng. AAU, ACM	ch. 80-P-320 001 ->								4.9364
Eng. AAU, ACM	->ch. 80-P-320 000								4.9518
All engines	version Bosch	0.0179/95	1.2549HDVS		3.7526RS				
All engines	version Bosch, ->ch. 86-E-150 000			2.7479PHT					
All engines	version Bosch, ch. 86-E-150 001 ->			2.7494PHT					
All engines	version Ducellier				3.7689RS				
All engines	->ch. 80-K-140 000, ch. ..-E-150 001 ->								4.8493
All engines	version Bosch	0.0179/95	1.2549HDVS	2.7479PHT	3.7573/14RS				
All engines	ch. ..-E-150 001 ->, ->ch. 80-K-140 000								4.8493

A10	CONDENSER	A20	CONTACT SET	A40	DISTRIBUTOR CAP	A50	ROTOR	A70	PICK-UP
C10	COIL	C20	IGNITION MODULE	C30	ELECTRONIC IGNITION KIT	E01	IGNITION CABLE SET		

The present application list is a brief version. For the detailed information about the possibility of installation on a specific vehicle, please refer to our web-catalogue http://catalogo.facet.eu/

Vehicle	alim.	kW	Date	Engine	FUNCTIONS ON THE VEHICLE A10	A20	A40	A50	A70	C10 - C30	C20	E01

ENGINE				
1.3	Petrol	40	08/83-07/94	AAV, HK, MH

Engine	Information	A10	A20	A40	A50	A70	C10 - C30		C20	E01
Eng. HK	version Bosch	0.0179/95	1.2549HDVS		3.7573/14RS					
Eng. HK	version Bosch, ->ch. 86-E-150 000			2.7479PHT						
All engines	version Bosch, ch. 86-E-150 001 ->, ->ch. 80-M-100 000			2.7494PHT						
Eng. AAV	version Bosch, ch. 80-M-100 001 ->			2.7530/36PHT						
Eng. MH	version Bosch				3.7556RS	8.2693				
Eng. AAV	version Bosch				3.7573/21RS	8.2723				
Eng. AAV							9.8114	C30		
Eng. MH	->ch. ..-H-060 000								9.4004	
Eng. MH	ch. ..-H-060 001 ->								9.4007	
Eng. HK, MH	ch. ..-E-150 001 ->, ->ch. 80-K-140 000									4.8493
Eng. AAV	ch. 80-P-320 001 ->									4.9364
Eng. AAV	->ch. 80-P-320 000									4.9518

ENGINE				
1.3	Petrol	43	08/82-07/88	GT, HJ

Engine	Information	A10	A20	A40	A50	A70	C10 - C30		C20	E01
All engines	version Bosch	0.0179/95	1.2549HDVS		3.7526RS					
All engines	version Bosch, ->ch. 86-E-150 000			2.7479PHT						
All engines	version Bosch, ch. 86-E-150 001 ->			2.7494PHT						
All engines	ch. ..-E-150 001 ->, ->ch. 80-K-140 000									4.8493

ENGINE				
1.3	Petrol	44	10/81-07/83	HH

Engine	Information	A10	A20	A40	A50	A70	C10 - C30		C20	E01
All engines	version Bosch	0.0179/95	1.2549HDVS	2.7479PHT	3.7526RS					
All engines	version Ducellier				3.7689RS					
All engines	ch. ..-E-150 001 ->, ->ch. 80-K-140 000									4.8493

ENGINE				
1.3	Petrol	55	09/82-09/89	GK

Engine	Information	A10	A20	A40	A50	A70	C10 - C30		C20	E01
All engines	version Bosch, ->ch. 86-E-150 000			2.7479PHT						
All engines	version Bosch, ch. 86-E-150 001 ->			2.7494PHT						
All engines	version Bosch, ->eng. GK012 822				3.7556RS					
All engines	version Bosch, eng. type GK012 823 ->				3.7573/21RS					
All engines	version Bosch					8.2723				
All engines	ch. ..-E-150 001 ->, ->ch. 80-H-220 000						9.6025	C10		
All engines	ch. 80-J-000 001 ->, ->ch. 80-K-220 000						9.6026	C10		
All engines	->ch. ..-E-150 000						9.6032	C10		
All engines	ch. ..-E-150 001 ->, ->ch. 80-K-140 000									4.8493

ENGINE				
1.3	Petrol	56	10/90-08/94	3F

Engine	Information	A10	A20	A40	A50	A70	C10 - C30		C20	E01
All engines	version Bosch, ->ch. 80-M-100 000			2.7494PHT						
All engines	version Bosch, ch. 80-M-100 001 ->			2.7530/36PHT						
All engines	version Bosch				3.7573/21RS					
All engines	version Bosch, 01/10/90 ->					8.2733				
All engines	->year 30/09/90						9.6025	C10	9.4007	
All engines	01/10/90 ->						9.8114	C30		
All engines	ch. 80-P-320 001 ->									4.9364
All engines	01/10/90 ->, ->ch. 80-P-320 000									4.9518

ENGINE				
1.3	Petrol	57	03/91-09/94	3F

Engine	Information	A10	A20	A40	A50	A70	C10 - C30		C20	E01
All engines	version Bosch, ->ch. 80-M-100 000			2.7494PHT						
All engines	version Bosch, ch. 80-M-100 001 ->			2.7530/36PHT						
All engines	version Bosch				3.7573/21RS					
All engines	version Bosch, 01/10/90 ->					8.2733				
All engines	->year 30/09/90						9.6025	C10	9.4007	
All engines	01/10/90 ->						9.8114	C30		
All engines	ch. 80-P-320 001 ->									4.9364
All engines	01/10/90 ->, ->ch. 80-P-320 000									4.9518

A10	CONDENSER	A20	CONTACT SET	A40	DISTRIBUTOR CAP	A50	ROTOR	A70	PICK-UP
C10	COIL	C20	IGNITION MODULE	C30	ELECTRONIC IGNITION KIT	E01	IGNITION CABLE SET		

The present application list is a brief version. For the detailed information about the possibility of installation on a specific vehicle, please refer to our web-catalogue http://catalogo.facet.eu/

Vehicle	alim.	kW	Date	Engine	FUNCTIONS ON THE VEHICLE A10	A20	A40	A50	A70	C10 - C30	C20	E01
1.3 Cat	Petrol	40	07/87-09/94	2G, AAV, MH, NZ								

Engine	Information	A10	A20	A40	A50	A70	C10 - C30	C20	E01
All engines	version Bosch, ->ch. 80-M-100 000			2.7494PHT					
Eng. 2G, AAV	version Bosch, ch. 80-M-100 001 ->			2.7530/36PHT					
Eng. 2G, MH, NZ	version Bosch				3.7556RS				
Eng. AAV	version Bosch				3.7573/21RS	8.2723			
Eng. 2G, MH, NZ	version Bosch, ->ch. 80-M-100 000					8.2693			
Eng. 2G	version Bosch, ch. 80-M-100 001 ->					8.2734			
Eng. 2G, MH, NZ	ch. ..-G-000 001 ->, ->ch. 80-H-220 000, ch. 80-L-000 001 ->, ->year 30/09/90						9.6025 C10		
Eng. 2G, MH, NZ	ch. 80-J-000 001 ->, ->ch. 80-K-220 000						9.6026 C10		
All engines	01/10/90 ->, pole nr. 3						9.8114 C30		
Eng. 2G, MH, NZ	01/10/90 ->, pole nr. 6						9.8116 C30		
Eng. MH, NZ	->ch. ..-H-060 000							9.4004	
Eng. 2G, MH, NZ	ch. ..-H-060 001 ->, ->year 30/09/90							9.4007	
Eng. 2G, MH, NZ	ch. ..-E-150 001 ->, ->ch. 80-K-140 000								4.8493
All engines	ch. 80-P-320 001 ->								4.9364
All engines	01/10/90 ->, ->ch. 80-P-320 000								4.9518

1.3 Cat	Petrol	55	10/89-09/94	3F

Engine	Information	A10	A20	A40	A50	A70	C10 - C30	C20	E01
All engines	version Bosch, ->ch. 80-M-100 000			2.7494PHT					
All engines	version Bosch, ch. 80-M-100 001 ->			2.7530/36PHT					
All engines	version Bosch				3.7573/21RS				
All engines	version Bosch, 01/10/90 ->					8.2733			
All engines	->year 30/09/90						9.6025 C10	9.4007	
All engines	01/10/90 ->						9.8114 C30		
All engines	ch. 80-P-320 001 ->								4.9364
All engines	01/10/90 ->, ->ch. 80-P-320 000								4.9518

1.3 G40	Petrol	83	08/90-09/94	PY

Engine	Information	A10	A20	A40	A50	A70	C10 - C30	C20	E01
All engines	version Bosch, ->ch. 80-M-100 000			2.7494PHT					
All engines	version Bosch, ch. 80-M-100 001 ->			2.7530/36PHT					
All engines	version Bosch				3.7573/21RS	8.2733			
All engines							9.8114 C30		
All engines	ch. 80-P-320 001 ->								4.9364
All engines	->ch. 80-P-320 000								4.9518

1.3 G40	Petrol	85	01/87-08/90	PY

Engine	Information	A10	A20	A40	A50	A70	C10 - C30	C20	E01
All engines	version Bosch			2.7494PHT	3.7573/21RS	8.2733			
All engines							9.6025 C10	9.4007	
All engines	->ch. 80-K-140 000, ch. ..-E-150 001 ->								4.8493

POLO III

1.0	Petrol	33	10/94-12/99	AEV

Engine	Information	A10	A20	A40	A50	A70	C10 - C30	C20	E01
All engines							9.8114 C30		

1.0	Petrol	37	05/99-05/02	AER, ALD, ALL, AUC

Engine	Information	A10	A20	A40	A50	A70	C10 - C30	C20	E01
All engines							9.8114 C30		
Eng. ALD, AUC							9.8120 C30		4.9601

1.4	Petrol	40	12/98-09/01	AEX, AKP, ANX

Engine	Information	A10	A20	A40	A50	A70	C10 - C30	C20	E01
Eng. ANX	version Bosch			2.7494PHT	3.7573/21RS	8.2723			
Eng. ANX	version Marelli			2.8216PHT	3.8257RS				
Eng. AEX, ANX							9.8114 C30		
Eng. AKP							9.8120 C30		4.9601
Eng. ANX									4.9640

A10	CONDENSER	A20	CONTACT SET	A40	DISTRIBUTOR CAP	A50	ROTOR	A70	PICK-UP
C10	COIL	C20	IGNITION MODULE	C30	ELECTRONIC IGNITION KIT	E01	IGNITION CABLE SET		

The present application list is a brief version. For the detailed information about the possibility of installation on a specific vehicle, please refer to our web-catalogue http://catalogo.facet.eu/

Vehicle	alim.	kW	Date	Engine	FUNCTIONS ON THE VEHICLE A10	A20	A40	A50	A70	C10 - C30	C20	E01
1.4	Petrol	44	05/97-09/01	AEX, AKK, AKV, ANW, APQ, AUD								
Eng. AEX, AKV, APQ	version Bosch					2.7494PHT	3.7573/21RS	8.2723				
Eng. AEX, AKV, APQ	version Marelli					2.8216PHT	3.8257RS					
Eng. AEX, AKV, APQ									9.8114	C30		
Eng. APQ									9.8114	C30		
Eng. AKK, ANW, AUD									9.8120	C30		4.9601
Eng. AEX, AKV, APQ	->ch. 6N-V-300 000											4.9640
Eng. AEX	ch. 6N-W-000 001 ->											4.9641
1.4	Petrol	55	06/00-09/01	AUA								
All engines									9.8120	C30		
1.4 16V	Petrol	55	10/99-09/01	AHW, APE, AUA								
All engines									9.8120	C30		4.9575
1.4 16V	Petrol	74	10/99-09/01	AFH, AFK, AUB								
Eng. AFH									9.8114	C30		
Eng. AFK, AUB									9.8120	C30		4.9575
1.6	Petrol	55	09/94-09/01	AEA, AEE, ALM								
All engines	version Bosch					2.7494PHT	3.7573/21RS	8.2723				
All engines	version Marelli					2.8216PHT	3.8257RS					
Eng. AEE, ALM									9.8114	C30		4.9640
Eng. AEA									9.8114	C30		
1.6	Petrol	65	05/96-09/01	AKL								
All engines									9.8120	C30		
1.6	Petrol	74	05/97-09/01	AEH, AFT, AKL, APF, AUR								
Eng. AFT	version Bosch					2.7530/36PHT	3.7573/21RS	8.2723				
Eng. AFT									9.8114	C30		4.9932
Eng. AEH, AKL, APF, AUR									9.8120	C30		
Eng. AEH, AKL												4.9484
Eng. APF, AUR												4.9585
Eng. AFT	+automatic transmission											4.9933
1.6 16V GTI	Petrol	92	10/99-09/01	ARC, AVY								
All engines									9.8120	C30		4.9575
100 1.4 16V	Petrol	74	04/96-10/99	AFH, AFK, AUB								
Eng. AFH	version Bosch					2.7494PHT	3.7573/21RS	8.2723				
Eng. AFH	version Marelli					2.8216PHT	3.8257RS					
Eng. AFH									9.8114	C30		4.9580
Eng. AFK, AUB									9.8120	C30		
100 1.6	Petrol	74	12/95-09/01	AEH, AFT, AKL, APF, AUR								
Eng. AFT	version Bosch					2.7530/36PHT	3.7573/21RS	8.2723				
Eng. AFT									9.8114	C30		4.9932
Eng. AEH, AKL, APF, AUR									9.8120	C30		
Eng. AEH, AKL												4.9484

A10	CONDENSER	A20	CONTACT SET	A40	DISTRIBUTOR CAP	A50	ROTOR	A70	PICK-UP
C10	COIL	C20	IGNITION MODULE	C30	ELECTRONIC IGNITION KIT	E01	IGNITION CABLE SET		

The present application list is a brief version. For the detailed information about the possibility of installation on a specific vehicle, please refer to our web-catalogue http://catalogo.facet.eu/

Vehicle	alim.	kW	Date	Engine	FUNCTIONS ON THE VEHICLE A10	A20	A40	A50	A70	C10 - C30	C20	E01
100 1.6	Petrol	74	12/95-09/01	**AEH, AFT, AKL, APF, AUR**								
Eng. APF, AUR												4.9585
Eng. AFT				+automatic transmission								4.9933
120 1.6 16V GTI	Petrol	88	09/98-10/99	**AJV**								
All engines										9.8120 C30		4.9575
2.0	Petrol	85	08/99-09/01	**ADC**								
All engines				version Bosch			2.7530/36PHT	3.7573/21RS				
All engines										9.8114 C30		
All engines				->ch. 6K-Y-502 794								4.9551
45 1.0	Petrol	33	10/94-09/96	**AEV**								
All engines				version Bosch			2.7494PHT	3.7573/21RS	8.2723			
All engines										9.8114 C30		4.9364
50 1.0	Petrol	37	09/96-10/99	**AER, ALD, ALL, AUC**								
Eng. AER, ALL				version Bosch			2.7494PHT	3.7573/21RS	8.2723			
Eng. AER, ALL				version Marelli			2.8216PHT	3.8257RS				
All engines										9.8114 C30		
Eng. ALD, AUC										9.8120 C30		
Eng. AER				->ch. 6N-V-300 000								4.9364
Eng. AER, ALL				ch. 6N-W-000 001 ->								4.9641
54 1.4	Petrol	40	01/98-08/99	**ANX**								
All engines				version Bosch			2.7494PHT	3.7573/21RS	8.2723			
All engines				version Marelli			2.8216PHT	3.8257RS				
All engines										9.8114 C30		4.9640
55 1.3	Petrol	40	10/94-04/97	**ADX**								
All engines				version Bosch			2.7494PHT	3.7573/21RS	8.2723			
All engines				version Marelli			2.8216PHT	3.8257RS				
All engines										9.8114 C30		4.9364
55 1.4	Petrol	40	08/95-10/99	**AEX, AKP, ANX**								
Eng. AEX				version Bosch			2.7494PHT	3.7573/21RS	8.2723			
Eng. AEX				version Marelli			2.8216PHT	3.8257RS				
Eng. AEX, ANX										9.8114 C30		
Eng. AKP										9.8120 C30		
Eng. AEX				->ch. 6N-V-300 000								4.9640
Eng. AEX				ch. 6N-W-000 001 ->								4.9641
60 1.4	Petrol	44	07/95-09/01	**AEX, AKK, AKV, ANW, APQ, AUD**								
Eng. AEX, AKV, APQ				version Bosch			2.7494PHT	3.7573/21RS	8.2723			
Eng. AEX, AKV, APQ				version Marelli			2.8216PHT	3.8257RS				
Eng. AEX, AKV, APQ										9.8114 C30		
Eng. AKK, ANW, AUD										9.8120 C30		4.9601
Eng. AEX, AKV, APQ				->ch. 6N-V-300 000								4.9640
Eng. AEX, AKV				ch. 6N-W-000 001 ->								4.9641

A10	CONDENSER	**A20**	CONTACT SET	**A40**	DISTRIBUTOR CAP	**A50**	ROTOR	**A70**	PICK-UP		
C10	COIL	**C20**	IGNITION MODULE	**C30**	ELECTRONIC IGNITION KIT	**E01**	IGNITION CABLE SET				

The present application list is a brief version. For the detailed information about the possibility of installation on a specific vehicle, please refer to our web-catalogue http://catalogo.facet.eu/

Vehicle	alim.	kW	Date	Engine	FUNCTIONS ON THE VEHICLE							
					A10	A20	A40	A50	A70	C10 - C30	C20	E01
75 1.4 16V	Petrol	55	10/99-09/01	**APE, AUA**								
All engines										9.8120 C30		4.9575
75 1.6	Petrol	55	10/94-09/01	**1F, AEA, AEE, AHS, ALM**								
Eng. AEA, AEE, AHS, ALM	version Bosch						2.7494PHT		8.2723			
Eng. 1F	version Bosch						2.7530/36PHT					
Eng. 1F	version Ducellier						2.7668PHT	3.7699RS				
Eng. AEA, AEE, AHS, ALM	version Marelli						2.8216PHT	3.8257RS				
All engines	version Bosch							3.7573/21RS				
All engines										9.8114 C30		
Eng. 1F												4.8965
Eng. AEE, ALM	->ch. 6N-V-300 000											4.9640
Eng. AEE, AHS	ch. 6N-W-000 001 ->											4.9641
75 1.6 4motion	Petrol	55	08/95-10/99	**AEA**								
All engines	version Bosch						2.7494PHT	3.7573/21RS	8.2723			
All engines	version Marelli						2.8216PHT	3.8257RS				
90 1.8	Petrol	66	01/97-09/01	**ADD**								
All engines	version Bosch						2.7530/36PHT	3.7573/21RS				
All engines										9.8114 C30		4.9549
POLO IV												
1.0	Petrol	37	08/96-12/01	**AER**								
All engines	version Bosch						2.7494PHT	3.7573/21RS	8.2723			
All engines	version Marelli						2.8216PHT	3.8257RS				
All engines										9.8114 C30		
All engines	->ch. 6N-V-300 000											4.9364
All engines	ch. 6N-W-000 001 ->											4.9641
1.0	Petrol	58	02/03-10/03	**ARA**								
All engines												4.9575
1.2	Petrol	40	01/02-05/07	**AWY, BMD**								
All engines	x 3, COIL ON PLUG, incl. spark plug connector									9.6331 C10		
1.2	Petrol	44	05/07-11/09	**BBM**								
All engines	x 3, COIL ON PLUG, incl. spark plug connector									9.6331 C10		
1.2 12V	Petrol	47	10/01-07/07	**AZQ, BME**								
All engines	x 3, COIL ON PLUG, incl. spark plug connector									9.6374 C10		
1.2 12V	Petrol	51	05/07-11/09	**BZG**								
All engines	x 3, COIL ON PLUG, incl. spark plug connector									9.6374 C10		
1.4	Petrol	55	11/02-04/12	**BBY, BKY**								
All engines	x 4, COIL ON PLUG, incl. spark plug connector									9.6374 C10		

A10	CONDENSER	**A20**	CONTACT SET	**A40**	DISTRIBUTOR CAP	**A50**	ROTOR	**A70**	PICK-UP
C10	COIL	**C20**	IGNITION MODULE	**C30**	ELECTRONIC IGNITION KIT	**E01**	IGNITION CABLE SET		

The present application list is a brief version. For the detailed information about the possibility of installation on a specific vehicle, please refer to our web-catalogue http://catalogo.facet.eu/

Vehicle	alim.	kW	Date	Engine	FUNCTIONS ON THE VEHICLE							
					A10	A20	A40	A50	A70	C10 - C30	C20	E01
1.4	Petrol	61	08/02-08/10	ENGINE BLM								
Engine: All engines	Information:									9.8120 C30		4.9723
1.4	Petrol	63	12/03-05/05	ENGINE BLM								
Engine: All engines	Information:									9.8120 C30		4.9723
1.4	Petrol	74	11/03-06/05	ENGINE BBZ								
Engine: All engines	Information: x 4, COIL ON PLUG, incl. spark plug connector									9.6374 C10		
1.4 16V	Petrol	55	10/01-05/08	ENGINE AUA, BBY, BKY								
Engine: Eng. BBY, BKY	Information: x 4, COIL ON PLUG, incl. spark plug connector									9.6374 C10		
Engine: Eng. AUA	Information:									9.8120 C30		4.9575
1.4 16V	Petrol	59	05/06-11/09	ENGINE BUD								
Engine: All engines	Information: x 4, COIL ON PLUG, incl. spark plug connector									9.6374 C10		
1.4 16V	Petrol	74	10/01-05/08	ENGINE AUB, BBZ								
Engine: All engines	Information: x 4, COIL ON PLUG, incl. spark plug connector									9.6374 C10		
1.4 BiFuel	Petrol/ Liquified Petro-leum Gas (LPG)	60	05/06-11/09	ENGINE BUD								
Engine: All engines	Information: x 4, COIL ON PLUG, incl. spark plug connector									9.6374 C10		
1.4 FSI	Petrol	63	02/02-07/06	ENGINE AXU								
Engine: All engines	Information: x 4, COIL ON PLUG, incl. spark plug connector									9.6374 C10		
1.6	Petrol	74	08/02->	ENGINE BAH, BPA								
Engine: All engines	Information:									9.8120 C30		4.9723
Engine: Eng. BAH	Information:									9.8120 C30		
1.6 16V	Petrol	77	05/06-11/09	ENGINE BTS								
Engine: All engines	Information: x 4, COIL ON PLUG, incl. spark plug connector									9.6374 C10		
1.6 Flex	Petrol/ Ethanol	76	12/04-10/14	ENGINE BPA								
Engine: All engines	Information:									9.8120 C30		4.9723
1.6 Total Flex	Petrol/ Ethanol	74	10/04-06/06	ENGINE BPA								
Engine: All engines	Information:									9.8120 C30		4.9723
1.8 GTI	Petrol	110	09/05-11/09	ENGINE BJX								
Engine: All engines	Information: x 4, COIL ON PLUG, incl. spark plug connector									9.6329 C10		

A10	CONDENSER	A20	CONTACT SET	A40	DISTRIBUTOR CAP	A50	ROTOR	A70	PICK-UP
C10	COIL	C20	IGNITION MODULE	C30	ELECTRONIC IGNITION KIT	E01	IGNITION CABLE SET		

The present application list is a brief version. For the detailed information about the possibility of installation on a specific vehicle, please refer to our web-catalogue http://catalogo.facet.eu/

Vehicle	alim.	kW	Date	Engine	FUNCTIONS ON THE VEHICLE							
					A10	A20	A40	A50	A70	C10 - C30	C20	E01
1.8 GTi Cup Edition	Petrol	132	05/06-11/09	BBU								
Engine: All engines — Information: x 4, COIL ON PLUG, incl. spark plug connector										9.6329 C10		
2.0	Petrol	85	09/02->	BBX								
Engine: All engines										9.8120 C30		4.9585
POLO V												
1.0	Petrol	44	01/14->	CHYA								
Engine: All engines — Information: x 3, BERU, ELDOR, COIL ON PLUG, incl. spark plug connector, Number of pins:4, incl. spark plug connector										9.6499 C10		
1.0	Petrol	55	01/14->	CHYB								
Engine: All engines — Information: x 3, BERU, ELDOR, COIL ON PLUG, incl. spark plug connector, Number of pins:4, incl. spark plug connector										9.6499 C10		
1.0 TSI	Petrol	70	11/14->	CHZB								
Engine: All engines — Information: x 3, BERU, ELDOR, COIL ON PLUG, incl. spark plug connector, Number of pins:4, incl. spark plug connector										9.6499 C10		
1.0 TSI	Petrol	81	11/14->	CHZC								
Engine: All engines — Information: x 3, BERU, ELDOR, COIL ON PLUG, incl. spark plug connector, Number of pins:4, incl. spark plug connector										9.6499 C10		
1.2	Petrol	44	03/09->	CGPB								
Engine: All engines — Information: x 3, COIL ON PLUG, incl. spark plug connector										9.6374 C10		
1.2	Petrol	51	06/09->	CGPA								
Engine: All engines — Information: x 3, COIL ON PLUG, incl. spark plug connector										9.6374 C10		
1.2 [IND]	Petrol	55	08/11->	CJLA								
Engine: All engines — Information: Qty: 3										9.6374 C10		
1.2 BlueMotion	Petrol	51	03/09-05/14	CGPA								
Engine: All engines — Information: x 3, COIL ON PLUG, incl. spark plug connector										9.6374 C10		
1.2 TSI	Petrol	66	05/11->	CBZC, CJZC								
Engine: Eng. CJZC — Information: x 4, BERU, ELDOR, COIL ON PLUG, incl. spark plug connector, Number of pins:4, incl. spark plug connector										9.6499 C10		
Engine: Eng. CBZC										9.8120 C30		4.7248
1.2 TSI	Petrol	77	11/09->	CBZB								
Engine: All engines										9.8120 C30		4.7248
1.2 TSI	Petrol	81	01/14->	CJZD								
Engine: All engines — Information: x 4, BERU, ELDOR, COIL ON PLUG, incl. spark plug connector, Number of pins:4, incl. spark plug connector										9.6499 C10		
1.2 TSI 16V	Petrol	66	02/14-10/17	CJZC								
Engine: All engines — Information: x 4, BERU, ELDOR, COIL ON PLUG, incl. spark plug connector, Number of pins:4, incl. spark plug connector										9.6499 C10		

A10	CONDENSER	A20	CONTACT SET	A40	DISTRIBUTOR CAP	A50	ROTOR	A70	PICK-UP
C10	COIL	C20	IGNITION MODULE	C30	ELECTRONIC IGNITION KIT	E01	IGNITION CABLE SET		

The present application list is a brief version. For the detailed information about the possibility of installation on a specific vehicle, please refer to our web-catalogue http://catalogo.facet.eu/

Vehicle	alim.	kW	Date	Engine	FUNCTIONS ON THE VEHICLE							
					A10	A20	A40	A50	A70	C10 - C30	C20	E01
1.2 TSi BlueMotion	Petrol	77	11/09-05/14	ENGINE **CBZB**								
All engines										9.8120 C30		
1.4	Petrol	63	03/09-05/14	ENGINE **CDDA, CGGB, CLPA**								
Eng. CDDA				Qty: 4						9.6374 C10		
Eng. CGGB, CLPA				x 4, COIL ON PLUG, incl. spark plug connector						9.6374 C10		
1.4 BiFuel	Petrol/ Liquified Petro-leum Gas (LPG)	60	03/10-01/11	ENGINE **CMAA**								
All engines				x 4, COIL ON PLUG, incl. spark plug connector						9.6374 C10		
1.4 GTi	Petrol	132	05/10->	ENGINE **CAVE, CTHE**								
All engines				x 4, COIL ON PLUG, incl. spark plug connector						9.6374 C10		
1.4 TSI	Petrol	103	10/12-05/14	ENGINE **CPTA**								
All engines				x 4, BERU, ELDOR, COIL ON PLUG, incl. spark plug connector, Number of pins:4, incl. spark plug connector						9.6499 C10		
1.4 TSI	Petrol	110	05/14->	ENGINE **CZEA**								
All engines				x 4, BERU, ELDOR, COIL ON PLUG, incl. spark plug connector, Number of pins:4, incl. spark plug connector						9.6499 C10		
1.4 TSi	Petrol	92	05/16->	ENGINE **CZCA**								
All engines				x 4, BERU, ELDOR, COIL ON PLUG, incl. spark plug connector, Number of pins:4, incl. spark plug connector						9.6499 C10		
1.4 TSI [RUS]	Petrol	92	05/14->	ENGINE **CZCA**								
All engines				Qty: 4						9.6499 C10		
1.6	Petrol	63	05/10->	ENGINE **CFNB**								
All engines				Qty: 4						9.6374 C10		
All engines				x 4, COIL ON PLUG, incl. spark plug connector						9.6374 C10		
1.6	Petrol	66	07/14->	ENGINE **CWVB**								
All engines				x 4, BERU, ELDOR, COIL ON PLUG, incl. spark plug connector, Number of pins:4, incl. spark plug connector						9.6499 C10		
1.6	Petrol	77	01/10->	ENGINE **CFNA, CLSA**								
All engines				x 4, COIL ON PLUG, x 4, COIL ON PLUG, incl. spark plug connector, incl. spark plug connector						9.6374 C10		
Eng. CLSA				Qty: 4						9.6374 C10		
1.6	Petrol	81	07/14->	ENGINE **CWVA**								
All engines				x 4, BERU, ELDOR, COIL ON PLUG, incl. spark plug connector, Number of pins:4, incl. spark plug connector						9.6499 C10		

A10	CONDENSER	**A20**	CONTACT SET	**A40**	DISTRIBUTOR CAP	**A50**	ROTOR	**A70**	PICK-UP
C10	COIL	**C20**	IGNITION MODULE	**C30**	ELECTRONIC IGNITION KIT	**E01**	IGNITION CABLE SET		

The present application list is a brief version. For the detailed information about the possibility of installation on a specific vehicle, please refer to our web-catalogue http://catalogo.facet.eu/

Vehicle	alim.	kW	Date	Engine	FUNCTIONS ON THE VEHICLE A10	A20	A40	A50	A70	C10 - C30	C20	E01
1.6 BiFuel	Petrol/ Liquified Petro-leum Gas (LPG)	60	01/11-05/14	**CNKA**								

Engine	Information	A10	A20	A40	A50	A70	C10 - C30		C20	E01
All engines	x 4, COIL ON PLUG, incl. spark plug connector						9.6374	C10		

1.8 GTI	Petrol	141	11/14->	**DAJA, DAJB**

Engine	Information	A10	A20	A40	A50	A70	C10 - C30		C20	E01
All engines	x 4, HITACHI, COIL ON PLUG, incl. spark plug connector						9.6536	C10		

2.0 R WRC	Petrol	162	08/13-05/14	**CDLJ**

Engine	Information	A10	A20	A40	A50	A70	C10 - C30		C20	E01
All engines	x 4, ELDOR, Housing Colour:Black, COIL ON PLUG, incl. spark plug connector						9.6326	C10		

POLO VI

1.0	Petrol	48	08/17-02/20	**CHYC, DFNB**

Engine	Information	A10	A20	A40	A50	A70	C10 - C30		C20	E01
All engines	x 3, BERU, ELDOR, HITACHI, COIL ON PLUG, incl. spark plug connector, Number of pins:4, incl. spark plug connector						9.6499	C10		

1.0	Petrol	55	06/17-08/21	**CHYB**

Engine	Information	A10	A20	A40	A50	A70	C10 - C30		C20	E01
All engines	x 3, x 4, BERU, ELDOR, HITACHI, COIL ON PLUG, incl. spark plug connector, Number of pins:4, incl. spark plug connector						9.6499	C10		

1.0 TGI	Petrol/ Com-pressed Natural Gas (CNG)	66	09/17->	**DBYA**

Engine	Information	A10	A20	A40	A50	A70	C10 - C30		C20	E01
All engines	x 3, BERU, ELDOR, COIL ON PLUG, incl. spark plug connec-tor, Number of pins:4, incl. spark plug connector						9.6499	C10		

1.0 TSI	Petrol	70	06/17->	**CHZL, DKLA, DLAC**

Engine	Information	A10	A20	A40	A50	A70	C10 - C30		C20	E01
All engines	x 3, BERU, ELDOR, HITACHI, COIL ON PLUG, incl. spark plug connector, Number of pins:4, incl. spark plug connector						9.6499	C10		

1.0 TSI	Petrol	81	07/20->	**DLAA**

Engine	Information	A10	A20	A40	A50	A70	C10 - C30		C20	E01
All engines	x 3, BERU, ELDOR, HITACHI, COIL ON PLUG, incl. spark plug connector, Number of pins:4, incl. spark plug connector						9.6499	C10		

1.0 TSI	Petrol	85	09/17->	**CHZJ, DKJA, DKRF**

Engine	Information	A10	A20	A40	A50	A70	C10 - C30		C20	E01
All engines	x 3, BERU, ELDOR, COIL ON PLUG, incl. spark plug connec-tor, Number of pins:4, incl. spark plug connector						9.6499	C10		

2.0 GTI	Petrol	147	11/17->	**CZPC, DKZC**

Engine	Information	A10	A20	A40	A50	A70	C10 - C30		C20	E01
All engines	x 4, HITACHI, COIL ON PLUG, incl. spark plug connector						9.6536	C10		

SANTANA

1.6	Petrol	55	08/81-12/84	**DT**

Engine	Information	A10	A20	A40	A50	A70	C10 - C30		C20	E01
All engines	version Bosch			2.7494PHT	3.7555RS	8.2731				
All engines							9.6025	C10	9.4004	

1.8	Petrol	66	01/83-12/84	**DS**

Engine	Information	A10	A20	A40	A50	A70	C10 - C30		C20	E01
All engines	version Bosch			2.7494PHT	3.7555RS	8.2731				

A10	CONDENSER	**A20**	CONTACT SET	**A40**	DISTRIBUTOR CAP	**A50**	ROTOR	**A70**	PICK-UP
C10	COIL	**C20**	IGNITION MODULE	**C30**	ELECTRONIC IGNITION KIT	**E01**	IGNITION CABLE SET		

The present application list is a brief version. For the detailed information about the possibility of installation on a specific vehicle, please refer to our web-catalogue http://catalogo.facet.eu/

Vehicle	alim.	kW	Date	Engine	FUNCTIONS ON THE VEHICLE A10	A20	A40	A50	A70	C10 - C30	C20	E01
1.8	Petrol	66	01/83-12/84	DS								

Engine	Information	A10	A20	A40	A50	A70	C10 - C30	C20	E01
All engines							9.6025 C10	9.4004	

1.9	Petrol	85	08/81-07/83	WN

Engine	Information	A10	A20	A40	A50	A70	C10 - C30	C20	E01
All engines	version Bosch			2.7493PHT	3.7573/16RS				
All engines							9.6032 C10	9.4004	

2.0	Petrol	85	08/83-12/84	JS

Engine	Information	A10	A20	A40	A50	A70	C10 - C30	C20	E01
All engines	version Bosch			2.7530/1PHT	3.7573/16RS				
All engines	version Bosch, 01/01/88 ->					8.2719			
All engines							9.6025 C10	9.4004	

SCIROCCO I

1.1	Petrol	37	04/74-07/79	FA

Engine	Information	A10	A20	A40	A50	A70	C10 - C30	C20	E01
All engines	version Bosch	0.0179/95	1.2534HDVS	2.7479PHT	3.7573/21RS				
All engines	version Ducellier				3.7689RS				
All engines									4.8727

1.3	Petrol	44	08/79-07/80	GF

Engine	Information	A10	A20	A40	A50	A70	C10 - C30	C20	E01
All engines	version Bosch	0.0179/95	1.2549HDVS	2.7479PHT	3.7573/14RS				
All engines									4.8727

1.5	Petrol	51	08/77-07/80	JB

Engine	Information	A10	A20	A40	A50	A70	C10 - C30	C20	E01
All engines	version Bosch	0.0179/96	1.2534HDVS	2.7479PHT	3.7555RS				
All engines									4.8727

SCIROCCO II

1.3	Petrol	40	08/83-07/84	HK

Engine	Information	A10	A20	A40	A50	A70	C10 - C30	C20	E01
All engines	version Bosch	0.0179/95	1.2549HDVS		3.7573/14RS				
All engines	version Bosch, ->ch. 53-E-046 000			2.7479PHT					
All engines	version Bosch, ch. 53-E-046 001 ->			2.7494PHT					
All engines	ch. 53-E-046 001 ->								4.8493
All engines	->ch. 53-E-046 000								4.8727

1.3	Petrol	44	08/80-12/83	GF

Engine	Information	A10	A20	A40	A50	A70	C10 - C30	C20	E01
All engines	version Bosch			2.7479PHT	3.7556RS				
All engines							9.6032 C10	9.4004	

1.6	Petrol	51	08/83-07/84	EWA

Engine	Information	A10	A20	A40	A50	A70	C10 - C30	C20	E01
All engines	version Bosch			2.7530/36PHT	3.7555RS	8.2719			
All engines	version Ducellier			2.7668PHT	3.7699RS				
All engines	ch. 53-E-046 001 ->						9.6025 C10		4.8725
All engines	->ch. 53-E-046 000						9.6032 C10		4.8727

1.6	Petrol	53	08/83-07/90	HN, RE

Engine	Information	A10	A20	A40	A50	A70	C10 - C30	C20	E01
Eng. HN	version Bosch, ->eng. HN 005 000			2.7479PHT					
Eng. HN	version Bosch, eng. type HN 005 001 ->, ->eng. HN 007 000			2.7494PHT					
All engines	version Bosch, eng. type HN 007 001 ->			2.7530/36PHT					
Eng. RE	version Ducellier			2.7668PHT	3.7699RS				
All engines	version Bosch				3.7555RS	8.2719			

A10	CONDENSER	A20	CONTACT SET	A40	DISTRIBUTOR CAP	A50	ROTOR	A70	PICK-UP
C10	COIL	C20	IGNITION MODULE	C30	ELECTRONIC IGNITION KIT	E01	IGNITION CABLE SET		

The present application list is a brief version. For the detailed information about the possibility of installation on a specific vehicle, please refer to our web-catalogue http://catalogo.facet.eu/

Vehicle	alim.	kW	Date	Engine	FUNCTIONS ON THE VEHICLE A10	A20	A40	A50	A70	C10 - C30	C20	E01

ENGINE: HN, RE

1.6	Petrol	53	08/83-07/90

Engine	Information	A10	A20	A40	A50	A70	C10 - C30		C20	E01
All engines	ch. 53-E-046 001 ->, ->ch. 53-J-020 000, ch. 53-L-000 001 ->						9.6025	C10		
Eng. RE	ch. 53-K-000 001 ->, ->ch. 53-K-020 000						9.6026	C10		
Eng. HN	->ch. 53-E-046 000						9.6032	C10		4.8727
Eng. HN									9.4007	
All engines	ch. 53-E-046 001 ->									4.8725

ENGINE: EW

1.6	Petrol	55	01/83-12/89

Engine	Information	A10	A20	A40	A50	A70	C10 - C30		C20	E01
All engines	version Bosch, ->eng. EW 012 000			2.7479PHT						
All engines	version Bosch, eng. type EW 012 001 ->, ->eng. EW 035 000			2.7494PHT						
All engines	version Bosch, eng. type EW 035 001 ->			2.7530/36PHT						
All engines	version Ducellier			2.7668PHT	3.7699RS					
All engines	version Bosch				3.7555RS	8.2719				
All engines	ch. 53-E-046 001 ->, ->ch. 53-J-020 000, ch. 53-L-000 001 ->						9.6025	C10		
All engines	ch. 53-K-000 001 ->, ->ch. 53-K-020 000						9.6026	C10		
All engines	->ch. 53-E-046 000						9.6032	C10		4.8727
All engines									9.4007	
All engines	ch. 53-E-046 001 ->									4.8725

ENGINE: 1HyFAD

1.6	Petrol	63	08/80-04/84

Engine	Information	A10	A20	A40	A50	A70	C10 - C30		C20	E01
All engines	version Bosch	0.0179/96	1.2534HDVS	2.7479PHT	3.7527RS					

ENGINE: EX

1.8	Petrol	66	08/83-07/92

Engine	Information	A10	A20	A40	A50	A70	C10 - C30		C20	E01
All engines	version Bosch, ->eng. EX 015 000			2.7479PHT						
All engines	version Bosch, eng. type EX 015 001 ->, ->eng. EX 035 000			2.7494PHT						
All engines	version Bosch, eng. type EX 035 000 ->			2.7530/36PHT						
All engines	version Ducellier			2.7668PHT	3.7699RS					
All engines	version Bosch				3.7555RS	8.2719				
All engines	ch. 53-E-046 001 ->, ->ch. 53-J-020 000, ch. 53-L-000 001 ->						9.6025	C10		
All engines	ch. 53-K-000 001 ->, ->ch. 53-K-020 000						9.6026	C10		
All engines	->ch. 53-E-046 000						9.6032	C10		4.8727
All engines									9.4007	
All engines	ch. 53-E-046 001 ->									4.8725

ENGINE: JH

1.8	Petrol	70	11/85-07/92

Engine	Information	A10	A20	A40	A50	A70	C10 - C30		C20	E01
All engines	version Bosch, ->eng. JH 240 000			2.7479PHT						
All engines	version Bosch, eng. type JH 240 001 ->, ->eng. JH 280 000			2.7494PHT						
All engines	version Bosch, eng. type JH 280 001 ->			2.7530/36PHT						
All engines	version Bosch				3.7555RS	8.2719				
All engines	ch. 53-E-046 001 ->, ->ch. 53-J-020 000, ch. 53-L-000 001 ->						9.6025	C10		
All engines	ch. 53-K-000 001 ->, ->ch. 53-K-020 000						9.6026	C10		
All engines	->ch. 53-E-046 000						9.6032	C10		4.8727
All engines									9.4007	
All engines	ch. 53-E-046 001 ->									4.8725

ENGINE: DX, KT

1.8	Petrol	82	08/82-12/89

Engine	Information	A10	A20	A40	A50	A70	C10 - C30		C20	E01
Eng. DX	version Bosch, ->eng. DX 110 000			2.7479PHT						
All engines	version Bosch, eng. type DX 110 001 ->, ->eng. DX 119 000, ->eng. KT 004 600			2.7494PHT	3.7573/16RS					
All engines	version Bosch, eng. type DX 119 001 ->, eng. type KT 004 601 ->			2.7530/36PHT						
All engines	version Bosch, ->eng. DX 110 000, eng. type DX 119 001 ->, eng. type KT 004 601 ->				3.7555RS					
All engines	version Bosch					8.2719				
All engines	ch. 53-E-046 001 ->, ->ch. 53-J-020 000, ch. 53-L-000 001 ->						9.6025	C10		

A10	CONDENSER	A20	CONTACT SET	A40	DISTRIBUTOR CAP	A50	ROTOR	A70	PICK-UP
C10	COIL	C20	IGNITION MODULE	C30	ELECTRONIC IGNITION KIT	E01	IGNITION CABLE SET		

The present application list is a brief version. For the detailed information about the possibility of installation on a specific vehicle, please refer to our web-catalogue http://catalogo.facet.eu/

Vehicle	alim.	kW	Date	Engine	FUNCTIONS ON THE VEHICLE							
					A10	A20	A40	A50	A70	C10 - C30	C20	E01
1.8	Petrol	82	08/82-12/89	ENGINE: DX, KT								
All engines			ch. 53-K-000 001 ->, ->ch. 53-K-020 000							9.6026 C10		
All engines			->ch. 53-E-046 000							9.6032 C10		4.8727
All engines											9.4007	
All engines			ch. 53-E-046 001 ->									4.8725
1.8 16V	Petrol	102	10/85-07/89	ENGINE: KR								
All engines			version Bosch				2.7530/36PHT	3.7573/21RS	8.2723			
All engines			ch. 53-E-046 001 ->, ->ch. 53-J-020 000, ch. 53-L-000 001 ->							9.6025 C10		
All engines			ch. 53-K-000 001 ->, ->ch. 53-K-020 000							9.6026 C10		
All engines			->ch. 53-E-046 000							9.6032 C10		
All engines											9.4007	4.8737
1.8 16V	Petrol	95	03/86-07/92	ENGINE: PL								
All engines			version Bosch				2.7530/36PHT	3.7573/21RS	8.2723			
All engines			ch. 53-L-000 001 ->							9.6025 C10		
All engines			->ch. 53-K-020 000							9.6026 C10		
All engines											9.4007	4.8737
SCIROCCO III												
1.4 TSI	Petrol	110	07/15-11/17	ENGINE: CZDA								
All engines			x 4, BERU, ELDOR, COIL ON PLUG, incl. spark plug connector, Number of pins:4, incl. spark plug connector							9.6499 C10		
1.4 TSI	Petrol	118	05/08-11/17	ENGINE: CAVD, CNWA, CTHD, CTKA								
All engines			x 4, COIL ON PLUG, incl. spark plug connector							9.6374 C10		
1.4 TSi	Petrol	90	08/08-11/17	ENGINE: CAXA, CMSB								
All engines			x 4, COIL ON PLUG, incl. spark plug connector							9.6374 C10		
1.4 TSI	Petrol	92	11/13-11/17	ENGINE: CZCA								
All engines			x 4, BERU, ELDOR, COIL ON PLUG, incl. spark plug connector, Number of pins:4, incl. spark plug connector							9.6499 C10		
1.4 TSI	Petrol	96	07/15->	ENGINE: CZDC								
All engines			Qty: 4							9.6499 C10		
2.0 R	Petrol	188	11/09-11/17	ENGINE: CDLC								
All engines			x 4, ELDOR, Housing Colour:Black, COIL ON PLUG, incl. spark plug connector							9.6326 C10		
2.0 R	Petrol	195	11/09-11/17	ENGINE: CDLA								
All engines			x 4, ELDOR, Housing Colour:Black, COIL ON PLUG, incl. spark plug connector							9.6326 C10		
2.0 R	Petrol	206	05/14-11/17	ENGINE: CDLK								
All engines			x 4, ELDOR, Housing Colour:Black, COIL ON PLUG, incl. spark plug connector							9.6326 C10		

A10	CONDENSER	A20	CONTACT SET	A40	DISTRIBUTOR CAP	A50	ROTOR	A70	PICK-UP
C10	COIL	C20	IGNITION MODULE	C30	ELECTRONIC IGNITION KIT	E01	IGNITION CABLE SET		

The present application list is a brief version. For the detailed information about the possibility of installation on a specific vehicle, please refer to our web-catalogue http://catalogo.facet.eu/

Vehicle	alim.	kW	Date	Engine	FUNCTIONS ON THE VEHICLE A10	A20	A40	A50	A70	C10 - C30	C20	E01
2.0 TFSI	Petrol	147	05/08-11/09	**CAWB**								
All engines				x 4, ELDOR, Housing Colour:Black, COIL ON PLUG, incl. spark plug connector						9.6326 C10		
2.0 TFSi	Petrol	155	11/09-05/14	**CCZB**								
All engines				x 4, ELDOR, Housing Colour:Black, COIL ON PLUG, incl. spark plug connector						9.6326 C10		
2.0 TSI	Petrol	155	11/09-11/17	**CCZB**								
All engines				x 4, ELDOR, Housing Colour:Black, COIL ON PLUG, incl. spark plug connector						9.6326 C10		
SHARAN I												
1.8 T 20V	Petrol	110	09/97-03/10	**AJH, AWC**								
Eng. AJH				x 4, COIL ON PLUG						9.6254S C10		
Eng. AWC				x 4, COIL ON PLUG, incl. spark plug connector						9.6345 C10		
Eng. AJH											9.4076	
2.0	Petrol	85	09/95-03/10	**ADY, ATM**								
Eng. ADY				version Bosch			2.7530/36PHT	3.7573/21RS				
Eng. ADY										9.8114 C30		4.9667
Eng. ATM										9.8120 C30		4.9585
2.0 LPG	Petrol/ Liquified Petro-leum Gas (LPG)	85	04/06-03/10	**ATM**								
All engines										9.8120 C30		4.9585
2.8 V6 24V	Petrol	150	04/00-03/10	**AYL**								
All engines				x 6, COIL ON PLUG						9.6335 C10		
2.8 V6 24V 4motion	Petrol	150	04/00-03/10	**AYL**								
All engines				x 6, COIL ON PLUG						9.6335 C10		
2.8 VR6	Petrol	150	08/01-05/03	**AYL**								
All engines				x 6, COIL ON PLUG						9.6335 C10		
SHARAN II												
1.4 TSI	Petrol	110	05/10->	**CAVA, CTHA, CZDA, DJKA**								
Eng. CAVA, CTHA				x 4, COIL ON PLUG, x 4, COIL ON PLUG, incl. spark plug connector, incl. spark plug connector						9.6374 C10		
Eng. CZDA, DJKA				x 4, BERU, ELDOR, HITACHI, COIL ON PLUG, incl. spark plug connector, Number of pins:4, incl. spark plug connector						9.6499 C10		
1.8 TSI	Petrol	118	11/11->	**CDAA**								
All engines				Qty: 4						9.6326 C10		
2.0 TFSI	Petrol	147	12/10-11/15	**CCZA**								
All engines				x 4, ELDOR, Housing Colour:Black, COIL ON PLUG, incl. spark plug connector						9.6326 C10		

A10	CONDENSER	**A20**	CONTACT SET	**A40**	DISTRIBUTOR CAP	**A50**	ROTOR	**A70**	PICK-UP
C10	COIL	**C20**	IGNITION MODULE	**C30**	ELECTRONIC IGNITION KIT	**E01**	IGNITION CABLE SET		

The present application list is a brief version. For the detailed information about the possibility of installation on a specific vehicle, please refer to our web-catalogue http://catalogo.facet.eu/

Vehicle	alim.	kW	Date	Engine	FUNCTIONS ON THE VEHICLE							
					A10	A20	A40	A50	A70	C10 - C30	C20	E01
2.0 TSI	Petrol	147	12/10-11/15	ENGINE: CCZA								
All engines				x 4, ELDOR, Housing Colour:Black, COIL ON PLUG, incl. spark plug connector						9.6326 C10		
SPACEFOX / SPACE CROSS												
1.6	Petrol	74	03/06->	ENGINE: BAH, BLH								
All engines										9.8120 C30		4.9723
1.6 FSI	Petrol	74	03/06->	ENGINE: BPA, CCRA, CFZA								
All engines										9.8120 C30		4.9723
1.6 Total Flex	Flexfuel	74	03/06->	ENGINE: BPA, CCRA, CFZA								
All engines										9.8120 C30		4.9723
TAIGO												
1.0 TSI	Petrol	70	09/21->	ENGINE: DLAC								
All engines				x 4, ELDOR, HITACHI, COIL ON PLUG, incl. spark plug connector						9.6499 C10		
1.0 TSI	Petrol	81	09/21->	ENGINE: DLAA								
All engines				x 4, ELDOR, HITACHI, COIL ON PLUG, incl. spark plug connector						9.6499 C10		
TAOS												
1.4 TSI	Petrol	110	10/20->	ENGINE: DJKA								
All engines				x 4, ELDOR, HITACHI, COIL ON PLUG, incl. spark plug connector						9.6499 C10		
1.4 TSI 4motion	Petrol	110	05/21->	ENGINE: DJKA								
All engines				x 4, ELDOR, HITACHI, COIL ON PLUG, incl. spark plug connector						9.6499 C10		
1.6 MPI	Petrol	81	07/21->	ENGINE: DWYA								
All engines				x 4, ELDOR, HITACHI, COIL ON PLUG, incl. spark plug connector						9.6499 C10		
TARO												
1.8	Petrol	61	04/89-09/94	ENGINE: 2Y								
All engines				->ch. 7A-L9503 250, ->ch. 7A-LH003 500, version Denso		1.3511HDV	2.7614	3.7614				
All engines				ch. 7A-L9503 251 ->, ch. 7A-LH003 501 ->, version Denso			2.7613	3.7627				
2.2	Petrol	69	06/89-07/94	ENGINE: 4Y								
All engines				->ch. 7A-L9503 250, ->ch. 7A-LH003 500, version Denso		1.3511HDV	2.7614	3.7614				
All engines				ch. 7A-L9503 251 ->, ch. 7A-LH003 501 ->, version Denso			2.7613	3.7627				
2.2 4x4	Petrol	69	06/89-07/94	ENGINE: 4Y								
All engines				->ch. 7A-L9503 250, ->ch. 7A-LH003 500, version Denso		1.3511HDV	2.7614	3.7614				
All engines				ch. 7A-L9503 251 ->, ch. 7A-LH003 501 ->, version Denso			2.7613	3.7627				

A10	CONDENSER	A20	CONTACT SET	A40	DISTRIBUTOR CAP	A50	ROTOR	A70	PICK-UP
C10	COIL	C20	IGNITION MODULE	C30	ELECTRONIC IGNITION KIT	E01	IGNITION CABLE SET		

The present application list is a brief version. For the detailed information about the possibility of installation on a specific vehicle, please refer to our web-catalogue http://catalogo.facet.eu/

Vehicle	alim.	kW	Date	Engine	FUNCTIONS ON THE VEHICLE: A10	A20	A40	A50	A70	C10 - C30	C20	E01
2.4 i 4x4	Petrol	84	06/89-03/97	22R								

Engine	Information	A10	A20	A40	A50	A70	C10 - C30		C20	E01
All engines	->ch. 7A-N9510 000, version Denso			2.7599						
All engines	ch. 7A-P9500 001 ->, version Denso			2.7630/43						
All engines	ch. 7A-P9500 001 ->						9.6103	C10		

T-CROSS

Vehicle	alim.	kW	Date	Engine
1.0 TSi	Petrol	70	12/18->	CHZL, DKLA, DLAC

Engine	Information	A10	A20	A40	A50	A70	C10 - C30		C20	E01
All engines	x 3, BERU, ELDOR, HITACHI, COIL ON PLUG, incl. spark plug connector, Number of pins:4, incl. spark plug connector						9.6499	C10		

Vehicle	alim.	kW	Date	Engine
1.0 TSI	Petrol	81	06/20->	DLAA

Engine	Information	A10	A20	A40	A50	A70	C10 - C30		C20	E01
All engines	x 3, BERU, COIL ON PLUG, incl. spark plug connector						9.6499	C10		

Vehicle	alim.	kW	Date	Engine
1.0 TSi	Petrol	85	12/18->	DKJA, DKRF

Engine	Information	A10	A20	A40	A50	A70	C10 - C30		C20	E01
All engines	x 3, BERU, ELDOR, HITACHI, COIL ON PLUG, incl. spark plug connector, Number of pins:4, incl. spark plug connector						9.6499	C10		

TIGUAN I

Vehicle	alim.	kW	Date	Engine
1.4 [CHN]	Petrol	96	11/11->	CFBA.

Engine	Information	A10	A20	A40	A50	A70	C10 - C30		C20	E01
All engines	Qty: 4						9.6374	C10		

Vehicle	alim.	kW	Date	Engine
1.4 TSI	Petrol	110	05/08-07/18	BWK, CAVA, CZDA

Engine	Information	A10	A20	A40	A50	A70	C10 - C30		C20	E01
Eng. BWK	Qty: 4						9.6374	C10		
Eng. CAVA	x 4, COIL ON PLUG, incl. spark plug connector						9.6374	C10		
Eng. CZDA	x 4, BERU, ELDOR, COIL ON PLUG, incl. spark plug connector, Number of pins:4, incl. spark plug connector						9.6499	C10		

Vehicle	alim.	kW	Date	Engine
1.4 TSI	Petrol	118	05/11-07/18	CAVD, CTHD

Engine	Information	A10	A20	A40	A50	A70	C10 - C30		C20	E01
All engines	x 4, COIL ON PLUG, incl. spark plug connector						9.6374	C10		

Vehicle	alim.	kW	Date	Engine
1.4 TSI	Petrol	90	08/10-07/18	CAXA

Engine	Information	A10	A20	A40	A50	A70	C10 - C30		C20	E01
All engines	x 4, COIL ON PLUG, incl. spark plug connector						9.6374	C10		

Vehicle	alim.	kW	Date	Engine
1.4 TSI	Petrol	92	05/15-07/18	CZDB

Engine	Information	A10	A20	A40	A50	A70	C10 - C30		C20	E01
All engines	x 4, BERU, ELDOR, COIL ON PLUG, incl. spark plug connector, Number of pins:4, incl. spark plug connector						9.6499	C10		

Vehicle	alim.	kW	Date	Engine
1.4 TSI 4motion	Petrol	110	09/07-07/18	BWK, CAVA

Engine	Information	A10	A20	A40	A50	A70	C10 - C30		C20	E01
All engines	x 4, COIL ON PLUG, incl. spark plug connector						9.6374	C10		

Vehicle	alim.	kW	Date	Engine
1.4 TSI 4motion	Petrol	118	05/11-07/18	CAVD, CTHD

Engine	Information	A10	A20	A40	A50	A70	C10 - C30		C20	E01
All engines	x 4, COIL ON PLUG, incl. spark plug connector						9.6374	C10		

Vehicle	alim.	kW	Date	Engine
2.0 TFSI	Petrol	125	05/08->	CCTB

Engine	Information	A10	A20	A40	A50	A70	C10 - C30		C20	E01
All engines	Qty: 4						9.6326	C10		

Vehicle	alim.	kW	Date	Engine
2.0 TFSI	Petrol	147	11/07-07/18	CAWB, CCTA

Engine	Information	A10	A20	A40	A50	A70	C10 - C30		C20	E01
All engines	x 4, ELDOR, Housing Colour:Black, COIL ON PLUG, incl. spark plug connector						9.6326	C10		

A10	CONDENSER	A20	CONTACT SET	A40	DISTRIBUTOR CAP	A50	ROTOR	A70	PICK-UP
C10	COIL	C20	IGNITION MODULE	C30	ELECTRONIC IGNITION KIT	E01	IGNITION CABLE SET		

The present application list is a brief version. For the detailed information about the possibility of installation on a specific vehicle, please refer to our web-catalogue http://catalogo.facet.eu/

Vehicle	alim.	kW	Date	Engine	FUNCTIONS ON THE VEHICLE A10	A20	A40	A50	A70	C10 - C30	C20	E01
2.0 TFSI 4motion	Petrol	125	09/07-07/18	CAWA, CCTB, CCZC								
Engine: All engines — Information: x 4, ELDOR, Housing Colour:Black, COIL ON PLUG, incl. spark plug connector										9.6326 C10		
2.0 TFSI 4motion	Petrol	147	09/07-07/18	CAWB, CCTA, CCZA								
Engine: All engines — Information: x 4, ELDOR, Housing Colour:Black, COIL ON PLUG, incl. spark plug connector										9.6326 C10		
2.0 TSI 4motion	Petrol	125	11/09-05/11	CCZC								
Engine: All engines — Information: x 4, ELDOR, Housing Colour:Black, COIL ON PLUG, incl. spark plug connector										9.6326 C10		
2.0 TSI 4motion	Petrol	132	05/11-07/18	CCZD								
Engine: All engines — Information: x 4, ELDOR, Housing Colour:Black, COIL ON PLUG, incl. spark plug connector										9.6326 C10		
2.0 TSI 4motion	Petrol	147	11/09-05/11	CCZA								
Engine: All engines — Information: x 4, ELDOR, Housing Colour:Black, COIL ON PLUG, incl. spark plug connector										9.6326 C10		
2.0 TSI 4motion	Petrol	155	05/11-07/18	CCZB								
Engine: All engines — Information: x 4, ELDOR, Housing Colour:Black, COIL ON PLUG, incl. spark plug connector										9.6326 C10		
TIGUAN II												
1.4 TSI	Petrol	110	05/16->	CZDA, CZEA, DJVA								
Engine: All engines — Information: x 4, BERU, ELDOR, HITACHI, COIL ON PLUG, incl. spark plug connector, Number of pins:4, incl. spark plug connector										9.6499 C10		
1.4 TSI	Petrol	92	01/16->	CZCA, CZDB								
Engine: All engines — Information: x 4, BERU, ELDOR, HITACHI, COIL ON PLUG, incl. spark plug connector, Number of pins:4, incl. spark plug connector										9.6499 C10		
1.4 TSI 4motion	Petrol	110	05/16-07/18	CZDA, CZEA								
Engine: All engines — Information: x 4, BERU, ELDOR, HITACHI, COIL ON PLUG, incl. spark plug connector, Number of pins:4, incl. spark plug connector										9.6499 C10		
2.0 TSI	Petrol	137	04/17->	DGUA, DTEA								
Engine: All engines — Information: x 4, HITACHI, x 4, BERU, COIL ON PLUG, HITACHI, COIL ON PLUG, incl. spark plug connector, incl. spark plug connector										9.6536 C10		
2.0 TSI 4motion	Petrol	132	01/16->	CZPA, DGVA								
Engine: All engines — Information: x 4, HITACHI, x 4, BERU, COIL ON PLUG, HITACHI, COIL ON PLUG, incl. spark plug connector, incl. spark plug connector										9.6536 C10		
2.0 TSI 4motion	Petrol	137	04/17->	DGUA, DTEA								
Engine: All engines — Information: x 4, HITACHI, x 4, BERU, COIL ON PLUG, HITACHI, COIL ON PLUG, incl. spark plug connector, incl. spark plug connector										9.6536 C10		
2.0 TSI 4motion	Petrol	140	09/18->	DKZA, DNLA, DNNA								
Engine: All engines — Information: x 4, HITACHI, COIL ON PLUG, incl. spark plug connector										9.6536 C10		

A10	CONDENSER	A20	CONTACT SET	A40	DISTRIBUTOR CAP	A50	ROTOR	A70	PICK-UP
C10	COIL	C20	IGNITION MODULE	C30	ELECTRONIC IGNITION KIT	E01	IGNITION CABLE SET		

The present application list is a brief version. For the detailed information about the possibility of installation on a specific vehicle, please refer to our web-catalogue http://catalogo.facet.eu/

Vehicle	alim.	kW	Date	Engine	FUNCTIONS ON THE VEHICLE A10	A20	A40	A50	A70	C10 - C30	C20	E01
2.0 TSI 4motion	Petrol	162	07/17->	**CXDA, DNJA**						9.6536 C10		
All engines				x 4, BERU, HITACHI, COIL ON PLUG, incl. spark plug connector								
2.0 TSI 4motion	Petrol	180	09/20->	**DNPA**						9.6536 C10		
All engines				x 4, HITACHI, COIL ON PLUG, incl. spark plug connector								
2.0 TSI R 4motion	Petrol	235	11/20->	**DNFG**						9.6536 C10		
All engines				x 4, HITACHI, COIL ON PLUG, incl. spark plug connector								
TOUAREG I												
3.2 V6	Petrol	162	10/02-11/06	**AZZ, BAA, BKJ, BMV, BMX, BRJ**								
Eng. AZZ, BKJ, BMV, BMX, BRJ				->year 01/06/06, x 6, COIL ON PLUG						9.6334 C10		
Eng. BAA				Qty: 6						9.6334 C10		
3.2 V6	Petrol	177	11/04-11/06	**BKJ, BMV, BMX, BRJ**								
All engines				->year 01/05/05, ->ch. 7L5090000, x 6, COIL ON PLUG --- 01/06/05 ->, ch. 7L6000001 ->, x 6, COIL ON PLUG						9.6334 C10		
3.6 V6 FSI	Petrol	206	10/05-05/10	**BHL**								
All engines				Qty: 6						9.6334 C10		
4.2 V8	Petrol	228	12/02-11/06	**AXQ**								
All engines				->year 01/05/05, x 8, COIL ON PLUG						9.6325 C10		
All engines				01/06/05 ->, x 8, Colour:Red, COIL ON PLUG, incl. spark plug connector						9.6327 C10		
4.2 V8 FSI	Petrol	257	06/06-05/10	**BAR**								
All engines				x 8, ELDOR, Housing Colour:Black, COIL ON PLUG, incl. spark plug connector						9.6326 C10		
All engines				x 8, Colour:Red, COIL ON PLUG, incl. spark plug connector						9.6327 C10		
TOUAREG II												
2.0 TFSi 4motion	Petrol	183	05/18->	**CYRC**								
All engines				x 4, HITACHI, COIL ON PLUG, incl. spark plug connector						9.6536 C10		
3.0 TFSI	Petrol	235	01/15->	**CYJA**								
All engines				Qty: 6						9.6327 C10		
3.0 V6 TSI	Petrol	213	08/10-03/18	**CJTA**								
All engines				x 6, Colour:Red, COIL ON PLUG, incl. spark plug connector						9.6327 C10		
3.0 V6 TSI Hybrid	Petrol/ Electric	245	04/10-03/18	**CGEA, CGFA**								
All engines				x 6, Colour:Red, COIL ON PLUG, incl. spark plug connector						9.6327 C10		
4.2 V8 FSI	Petrol	265	01/11-03/18	**CGNA**								
All engines				x 8, Colour:Red, COIL ON PLUG, incl. spark plug connector						9.6327 C10		

A10	CONDENSER	**A20**	CONTACT SET	**A40**	DISTRIBUTOR CAP	**A50**	ROTOR	**A70**	PICK-UP
C10	COIL	**C20**	IGNITION MODULE	**C30**	ELECTRONIC IGNITION KIT	**E01**	IGNITION CABLE SET		

The present application list is a brief version. For the detailed information about the possibility of installation on a specific vehicle, please refer to our web-catalogue http://catalogo.facet.eu/

Vehicle	alim.	kW	Date	Engine	FUNCTIONS ON THE VEHICLE: A10	A20	A40	A50	A70	C10 - C30	C20	E01

TOURAN I

1.2 TSI	Petrol	77	05/10-05/15	ENGINE: CBZB

Engine	Information	A10	A20	A40	A50	A70	C10 - C30	C20	E01
All engines							9.8120 C30		4.7248

1.4 TSI	Petrol	103	02/06-05/15	ENGINE: BMY, CAVC, CTHC

Engine	Information	A10	A20	A40	A50	A70	C10 - C30	C20	E01
All engines	x 4, COIL ON PLUG, incl. spark plug connector						9.6374 C10		

1.4 TSI	Petrol	125	11/06-05/15	ENGINE: BLG, CAVB, CTHB

Engine	Information	A10	A20	A40	A50	A70	C10 - C30	C20	E01
All engines	x 4, COIL ON PLUG, incl. spark plug connector						9.6374 C10		

1.4 TSI EcoFuel	CNG	110	05/09-05/10	ENGINE: CDGA

Engine	Information	A10	A20	A40	A50	A70	C10 - C30	C20	E01
All engines	x 4, COIL ON PLUG, incl. spark plug connector						9.6374 C10		
All engines	x 4, COIL ON PLUG, incl. spark plug connector						9.6374 C10		

1.6	Petrol	75	07/03-05/10	ENGINE: BGU, BSE, BSF

Engine	Information	A10	A20	A40	A50	A70	C10 - C30	C20	E01
All engines							9.8120 C30		4.9585

1.6 BiFuel	Petrol/ Liquified Petroleum Gas (LPG)	75	11/06-05/10	ENGINE: BSF

Engine	Information	A10	A20	A40	A50	A70	C10 - C30	C20	E01
All engines							9.8120 C30		

1.6 FSI	Petrol	85	02/03-01/07	ENGINE: BAG, BLF, BLP

Engine	Information	A10	A20	A40	A50	A70	C10 - C30	C20	E01
All engines	x 4, COIL ON PLUG, incl. spark plug connector						9.6374 C10		
Eng. BLP	Qty: 4						9.6374 C10		

2.0 EcoFuel	CNG	80	02/06-05/09	ENGINE: BSX

Engine	Information	A10	A20	A40	A50	A70	C10 - C30	C20	E01
All engines									4.7223

2.0 FSI	Petrol	110	10/03-01/07	ENGINE: AXW, BLR, BLX, BLY, BVY, BVZ

Engine	Information	A10	A20	A40	A50	A70	C10 - C30	C20	E01
All engines	x 4, ELDOR, Housing Colour:Black, COIL ON PLUG, incl. spark plug connector						9.6326 C10		
Eng. AXW, BLX, BVY	Qty: 4						9.6326 C10		

2.0 FSI	Petrol	85	10/04-05/10	ENGINE: BJZ

Engine	Information	A10	A20	A40	A50	A70	C10 - C30	C20	E01
All engines							9.8120 C30		4.9585

2.0 TDI [CHN]	Petrol	88	04/09->	ENGINE: CGZA

Engine	Information	A10	A20	A40	A50	A70	C10 - C30	C20	E01
All engines							9.8120 C30		4.9585

FSI	Petrol	85	02/03-11/06	ENGINE: BAG, BLF, BLP

Engine	Information	A10	A20	A40	A50	A70	C10 - C30	C20	E01
All engines	x 4, COIL ON PLUG, incl. spark plug connector						9.6374 C10		

TOURAN II

1.0 TSI	Petrol	85	12/18->	ENGINE: DKRB

Engine	Information	A10	A20	A40	A50	A70	C10 - C30	C20	E01
All engines	x 3, BERU, ELDOR, COIL ON PLUG, incl. spark plug connector, Number of pins:4, incl. spark plug connector						9.6499 C10		

A10	CONDENSER	A20	CONTACT SET	A40	DISTRIBUTOR CAP	A50	ROTOR	A70	PICK-UP
C10	COIL	C20	IGNITION MODULE	C30	ELECTRONIC IGNITION KIT	E01	IGNITION CABLE SET		

The present application list is a brief version. For the detailed information about the possibility of installation on a specific vehicle, please refer to our web-catalogue http://catalogo.facet.eu/

Vehicle	alim.	kW	Date	Engine	FUNCTIONS ON THE VEHICLE							
					A10	A20	A40	A50	A70	C10 - C30	C20	E01
1.2 TSI	Petrol	81	05/15->	CYVB								
All engines				x 4, BERU, ELDOR, HITACHI, COIL ON PLUG, incl. spark plug connector, Number of pins:4, incl. spark plug connector						9.6499 C10		
1.4 TSI	Petrol	110	05/15->	CZDA								
All engines				x 4, BERU, ELDOR, HITACHI, COIL ON PLUG, incl. spark plug connector, Number of pins:4, incl. spark plug connector						9.6499 C10		
1.8 TSI	Petrol	132	11/15->	CJSA								
All engines				->year 01/09/18, x 4, HITACHI, COIL ON PLUG, incl. spark plug connector						9.6536 C10		
TRANSPORTER II												
2.0	Petrol	51	08/75-04/79	CJ, GD, GE								
All engines								3.7567RS				
TRANSPORTER III												
1.9	Petrol	44	08/82-07/92	DF								
All engines								3.7567RS			9.4007	4.7159
All engines				ch. 24-L-000 001 ->						9.6025 C10		
All engines				->ch. 24-K-175 000						9.6026 C10		
1.9	Petrol	57	08/82-07/92	DG								
All engines								3.7567RS			9.4007	4.7159
All engines				ch. 24-L-000 001 ->						9.6025 C10		
All engines				->ch. 24-K-175 000						9.6026 C10		
1.9 Syncro	Petrol	57	11/84-07/92	DG								
All engines								3.7567RS			9.4007	4.7159
All engines				ch. 24-L-000 001 ->						9.6025 C10		
All engines				->ch. 24-K-175 000						9.6026 C10		
2.1	Petrol	64	10/86-07/92	SR								
All engines										9.6025 C10	9.4007	
2.1	Petrol	70	08/85-07/92	MV								
All engines										9.6025 C10	9.4007	
2.1	Petrol	82	08/84-07/92	DJ								
All engines				ch. 24-L-000 001 ->						9.6025 C10		
All engines				->ch. 24-K-175 000						9.6026 C10		
All engines											9.4007	4.7159
2.1 Cat	Petrol	70	06/89-07/92	MV								
All engines										9.6025 C10	9.4007	
2.1 i	Petrol	68	07/89-07/92	SS								
All engines										9.6025 C10	9.4007	

A10	CONDENSER	A20	CONTACT SET	A40	DISTRIBUTOR CAP	A50	ROTOR	A70	PICK-UP
C10	COIL	C20	IGNITION MODULE	C30	ELECTRONIC IGNITION KIT	E01	IGNITION CABLE SET		

The present application list is a brief version. For the detailed information about the possibility of installation on a specific vehicle, please refer to our web-catalogue http://catalogo.facet.eu/

Vehicle	alim.	kW	Date	Engine	FUNCTIONS ON THE VEHICLE: A10	A20	A40	A50	A70	C10 - C30	C20	E01
2.1 Syncro	Petrol	64	10/86-07/92	SR						9.6025 C10	9.4007	
2.1 Syncro	Petrol	70	08/85-07/92	MV						9.6025 C10	9.4007	
2.1 Syncro	Petrol	82	01/86-07/92	DJ						9.6025 C10		
										9.6026 C10		
											9.4007	4.7159

TRANSPORTER IV

Vehicle	alim.	kW	Date	Engine	A10	A20	A40	A50	A70	C10 - C30	C20	E01
1.8	Petrol	49	12/90-07/92	5K7M 710			2.7530/36PHT	3.7555RS				
										9.8116 C30		
												4.9671
2.0	Petrol	62	07/90-04/03	AAC			2.7494PHT					
							2.7530/36PHT					
								3.7573/21RS				
										9.8114 C30		
												4.9671
2.5	Petrol	81	09/90-06/03	AAF, ACU, AEU			2.7530/1PHT	3.7573/21RS				
									8.2723			
										9.8114 C30		
2.5	Petrol	85	08/96-04/03	AET, APL, AVT			2.7530/1PHT	3.7573/21RS	8.2723			
										9.8114 C30		
2.5 Syncro	Petrol	81	08/92-04/03	AAF, ACU, AEU			2.7530/1PHT	3.7573/21RS				
									8.2723			
										9.8114 C30		
2.5 Syncro	Petrol	85	07/96-04/03	AET, APL, AVT			2.7530/1PHT	3.7573/21RS	8.2723			
										9.8114 C30		

TRANSPORTER V

Vehicle	alim.	kW	Date	Engine	A10	A20	A40	A50	A70	C10 - C30	C20	E01
2.0	Petrol	85	11/03-08/15	AXA						9.8120 C30		4.9585

A10	CONDENSER	A20	CONTACT SET	A40	DISTRIBUTOR CAP	A50	ROTOR	A70	PICK-UP
C10	COIL	C20	IGNITION MODULE	C30	ELECTRONIC IGNITION KIT	E01	IGNITION CABLE SET		

The present application list is a brief version. For the detailed information about the possibility of installation on a specific vehicle, please refer to our web-catalogue http://catalogo.facet.eu/

Vehicle	alim.	kW	Date	Engine	FUNCTIONS ON THE VEHICLE A10	A20	A40	A50	A70	C10 - C30	C20	E01
2.0 BiFuel	Petrol/ Compressed Natural Gas (CNG)	85	05/11-08/15	**AXA**								
Engine: All engines	Information:									9.8120 C30		
2.0 CNG	Petrol/ Compressed Natural Gas (CNG)	85	11/03-08/15	**AXACNG**								
Engine: All engines	Information:									9.8120 C30		
2.0 TSI	Petrol	110	07/12-08/15	**CJKB**								
Engine: All engines	Information: x 4, ELDOR, Housing Colour:Black, COIL ON PLUG, incl. spark plug connector									9.6326 C10		
2.0 TSI	Petrol	150	05/11-08/15	**CJKA**								
Engine: All engines	Information: x 4, ELDOR, Housing Colour:Black, COIL ON PLUG, incl. spark plug connector									9.6326 C10		
2.0 TSI 4motion	Petrol	150	07/11-08/15	**CJKA**								
Engine: All engines	Information: x 4, ELDOR, Housing Colour:Black, COIL ON PLUG, incl. spark plug connector									9.6326 C10		
3.2 4motion	Petrol	170	11/03-11/09	**BDL**								
Engine: All engines	Information: x 6, COIL ON PLUG									9.6334 C10		
3.2 4motion	Petrol	173	11/03-11/09	**BKK, CFLA**								
Engine: All engines	Information: x 6, COIL ON PLUG									9.6334 C10		
3.2 V6	Petrol	170	04/03-11/09	**BDL**								
Engine: All engines	Information: x 6, COIL ON PLUG									9.6334 C10		
3.2 V6	Petrol	173	08/03-11/09	**BKK, CFLA**								
Engine: All engines	Information: x 6, COIL ON PLUG									9.6334 C10		
Engine: Eng. BKK	Information: Qty: 6									9.6334 C10		
3.2 V6 4motion	Petrol	170	04/03-06/05	**BDL**								
Engine: All engines	Information: x 6, COIL ON PLUG									9.6334 C10		
3.2 V6 4motion	Petrol	173	11/03-12/09	**BKK, CFLA**								
Engine: All engines	Information: x 6, COIL ON PLUG									9.6334 C10		
TRANSPORTER VI												
2.0 TSI	Petrol	110	04/15-07/19	**CJKB**								
Engine: All engines	Information: x 4, ELDOR, Housing Colour:Black, COIL ON PLUG, incl. spark plug connector									9.6326 C10		

A10	CONDENSER	**A20**	CONTACT SET	**A40**	DISTRIBUTOR CAP	**A50**	ROTOR	**A70**	PICK-UP
C10	COIL	**C20**	IGNITION MODULE	**C30**	ELECTRONIC IGNITION KIT	**E01**	IGNITION CABLE SET		

The present application list is a brief version. For the detailed information about the possibility of installation on a specific vehicle, please refer to our web-catalogue http://catalogo.facet.eu/

Vehicle	alim.	kW	Date	Engine	FUNCTIONS ON THE VEHICLE							
					A10	A20	A40	A50	A70	C10 - C30	C20	E01

2.0 TSI	Petrol	150	04/15-07/19	ENGINE: CJKA

Engine	Information	A10	A20	A40	A50	A70	C10 - C30		C20	E01
All engines	x 4, ELDOR, Housing Colour:Black, COIL ON PLUG, incl. spark plug connector						9.6326	C10		

2.0 TSI 4motion	Petrol	150	06/15-07/19	ENGINE: CJKA

Engine	Information	A10	A20	A40	A50	A70	C10 - C30		C20	E01
All engines	x 4, ELDOR, Housing Colour:Black, COIL ON PLUG, incl. spark plug connector						9.6326	C10		

T-ROC

1.0 TSI	Petrol	81	09/20->	ENGINE: DLAA

Engine	Information	A10	A20	A40	A50	A70	C10 - C30		C20	E01
All engines	x 3, ELDOR, HITACHI, COIL ON PLUG, incl. spark plug connector, Number of pins:4, incl. spark plug connector						9.6499	C10		

1.0 TSI	Petrol	85	07/17-11/20	ENGINE: CHZJ, DKRF

Engine	Information	A10	A20	A40	A50	A70	C10 - C30		C20	E01
All engines	x 3, BERU, ELDOR, HITACHI, x 3, BERU, COIL ON PLUG, ELDOR, HITACHI, COIL ON PLUG, incl. spark plug connector, Number of pins:4, incl. spark plug connector, Number of pins:4, incl. spark plug connector						9.6499	C10		

2.0 R 4motion	Petrol	221	09/19->	ENGINE: DNFC, DNUE

Engine	Information	A10	A20	A40	A50	A70	C10 - C30		C20	E01
All engines	01/11/19 ->, x 4, HITACHI, COIL ON PLUG, incl. spark plug connector						9.6536	C10		

2.0 TSI 4motion	Petrol	140	07/17->	ENGINE: CZPB, DKZA, DNNA

Engine	Information	A10	A20	A40	A50	A70	C10 - C30		C20	E01
All engines	01/10/18 ->, x 4, HITACHI, COIL ON PLUG, incl. spark plug connector						9.6536	C10		

UP

1.0	Petrol	44	08/11->	ENGINE: CHYA, CHYE, DAFA

Engine	Information	A10	A20	A40	A50	A70	C10 - C30		C20	E01
All engines	x 3, BERU, ELDOR, HITACHI, COIL ON PLUG, incl. spark plug connector, Number of pins:4, incl. spark plug connector						9.6499	C10		
Eng. DAFA	Qty: 3						9.6499	C10		

1.0	Petrol	55	08/11-11/19	ENGINE: CHYB

Engine	Information	A10	A20	A40	A50	A70	C10 - C30		C20	E01
All engines	x 3, BERU, ELDOR, HITACHI, COIL ON PLUG, incl. spark plug connector, Number of pins:4, incl. spark plug connector						9.6499	C10		

1.0	Petrol	56	01/14->	ENGINE: --

Engine	Information	A10	A20	A40	A50	A70	C10 - C30		C20	E01
All engines	Qty: 3						9.6499	C10		

1.0 EcoFuel	Petrol/ Compressed Natural Gas (CNG)	50	11/12->	ENGINE: CPGA

Engine	Information	A10	A20	A40	A50	A70	C10 - C30		C20	E01
All engines	x 3, x 4, BERU, ELDOR, HITACHI, COIL ON PLUG, incl. spark plug connector, Number of pins:4, incl. spark plug connector						9.6499	C10		

1.0 GTI	Petrol	85	11/17->	ENGINE: DKRA

Engine	Information	A10	A20	A40	A50	A70	C10 - C30		C20	E01
All engines	x 3, BERU, ELDOR, HITACHI, COIL ON PLUG, incl. spark plug connector, Number of pins:4, incl. spark plug connector						9.6499	C10		

A10	CONDENSER	A20	CONTACT SET	A40	DISTRIBUTOR CAP	A50	ROTOR	A70	PICK-UP
C10	COIL	C20	IGNITION MODULE	C30	ELECTRONIC IGNITION KIT	E01	IGNITION CABLE SET		

The present application list is a brief version. For the detailed information about the possibility of installation on a specific vehicle, please refer to our web-catalogue http://catalogo.facet.eu/

Vehicle	alim.	kW	Date	Engine	FUNCTIONS ON THE VEHICLE							
					A10	A20	A40	A50	A70	C10 - C30	C20	E01

ENGINE				
1.0 TSI	Petrol	66	05/16-09/18	**CHZA, DKLC**

Engine	Information	A10	A20	A40	A50	A70	C10 - C30		C20	E01
All engines	x 3, x 4, BERU, ELDOR, HITACHI, COIL ON PLUG, incl. spark plug connector, Number of pins:4, incl. spark plug connector						9.6499	C10		

VENTO

ENGINE				
1.4	Petrol	40	11/91-09/98	**ABD, AEX**

Engine	Information	A10	A20	A40	A50	A70	C10 - C30		C20	E01
Eng. ABD	version Bosch			2.7494PHT	3.7573/21RS	8.2723				
All engines							9.8114	C30		
Eng. ABD										4.8493
Eng. AEX	01/06/96 ->									4.9640

ENGINE				
1.4	Petrol	44	11/91-09/98	**ABD, AEX, APQ**

Engine	Information	A10	A20	A40	A50	A70	C10 - C30		C20	E01
Eng. ABD	version Bosch			2.7494PHT	3.7573/21RS	8.2723				
All engines							9.8114	C30		
Eng. ABD										4.8493
Eng. AEX	01/06/96 ->									4.9640
Eng. APQ										4.9660

ENGINE				
1.6	Petrol	55	09/92-09/98	**ABU, AEA, AEE**

Engine	Information	A10	A20	A40	A50	A70	C10 - C30		C20	E01
Eng. ABU, AEA	version Bosch			2.7494PHT	3.7573/21RS					
Eng. AEA	version Bosch					8.2723				
All engines							9.8114	C30		
Eng. ABU	->ch. 1H-P-560 000									4.8736
Eng. ABU	ch. 1H-P-560 001 ->									4.9364
Eng. AEA										4.9549
Eng. AEE	01/06/96 ->									4.9609

ENGINE				
1.6	Petrol	74	10/94-02/99	**AEK, AFT, AKS**

Engine	Information	A10	A20	A40	A50	A70	C10 - C30		C20	E01
All engines	version Bosch			2.7530/36PHT	3.7573/21RS	8.2723				
Eng. AEK	version Ducellier			2.7668PHT	3.7699RS					
All engines							9.8114	C30		
Eng. AEK										4.9551
Eng. AFT	->year 31/05/96									4.9933
Eng. AFT, AKS	01/06/96 ->									4.9937

ENGINE				
1.8	Petrol	55	11/91-09/98	**AAM**

Engine	Information	A10	A20	A40	A50	A70	C10 - C30		C20	E01
All engines	version Bosch			2.7494PHT	3.7573/21RS					
All engines	version Ducellier			2.7668PHT	3.7699RS					
All engines							9.8114	C30		
All engines	->ch. 1H-R-990 000									4.8725
All engines	ch. 1H-S-000 001 ->									4.9549

ENGINE				
1.8	Petrol	66	11/91-02/99	**ABS, ADZ, ANP**

Engine	Information	A10	A20	A40	A50	A70	C10 - C30		C20	E01
Eng. ABS, ADZ	version Bosch			2.7494PHT	3.7573/21RS					
Eng. ABS, ADZ	version Ducellier			2.7668PHT	3.7699RS					
All engines							9.8114	C30		
Eng. ABS										4.8725
Eng. ADZ, ANP										4.9549

ENGINE				
2.0	Petrol	85	11/91-09/98	**2E, ADY, AGG, AKR**

Engine	Information	A10	A20	A40	A50	A70	C10 - C30		C20	E01
Eng. 2E, ADY	version Bosch			2.7494PHT	3.7573/21RS					
All engines							9.8114	C30		
Eng. AKR										4.8725
Eng. 2E										4.8965

A10	CONDENSER	**A20**	CONTACT SET	**A40**	DISTRIBUTOR CAP	**A50**	ROTOR	**A70**	PICK-UP
C10	COIL	**C20**	IGNITION MODULE	**C30**	ELECTRONIC IGNITION KIT	**E01**	IGNITION CABLE SET		

The present application list is a brief version. For the detailed information about the possibility of installation on a specific vehicle, please refer to our web-catalogue http://catalogo.facet.eu/

Vehicle	alim.	kW	Date	Engine	FUNCTIONS ON THE VEHICLE							
					A10	A20	A40	A50	A70	C10 - C30	C20	E01
2.0	Petrol	85	11/91-09/98	ENGINE 2E, ADY, AGG, AKR								
Eng. ADY, AGG												4.9549
2.0 GL	Petrol	79	05/96-12/97	ENGINE AEP								
All engines										9.8114 C30		4.9549
2.8 VR6	Petrol	120	08/95-04/96	ENGINE AAA								
All engines				->ch. 1H-PW480 000, ->ch. 1H-PB060 000, version Bosch			2.7530/3PHT					
All engines				->ch. 1H-NW300 000, ->ch. 1H-NB060 000, version Bosch				3.7573/48RS				
All engines				ch. 1H-NW300 001 ->, ->ch. 1H-PW480 000, ch. 1H-NB060 001 ->, ->ch. 1H-PB060 000, version Bosch				3.7573/49RS				
All engines				->ch. 1H-PW480 000						9.6169 C10		
2.8 VR6	Petrol	128	01/92-09/98	ENGINE AAA								
All engines				->ch. 1H-PW480 000, ->ch. 1H-PB060 000, version Bosch			2.7530/3PHT					
All engines				->ch. 1H-NW300 000, ->ch. 1H-NB060 000, version Bosch				3.7573/48RS				
All engines				ch. 1H-NW300 001 ->, ->ch. 1H-PW480 000, ch. 1H-NB060 001 ->, ->ch. 1H-PB060 000, version Bosch				3.7573/49RS				
All engines				->ch. 1H-PW480 000						9.6169 C10		

A10	CONDENSER	A20	CONTACT SET	A40	DISTRIBUTOR CAP	A50	ROTOR	A70	PICK-UP
C10	COIL	C20	IGNITION MODULE	C30	ELECTRONIC IGNITION KIT	E01	IGNITION CABLE SET		

The present application list is a brief version. For the detailed information about the possibility of installation on a specific vehicle, please refer to our web-catalogue http://catalogo.facet.eu/

Vehicle	alim.	kW	Date	Engine	FUNCTIONS ON THE VEHICLE							
					A10	A20	A40	A50	A70	C10 - C30	C20	E01
1300												
				ENGINE								
1.3	Petrol	43	01/68-10/71	--, 12 H								
Engine	Information				A10	A20	A40	A50	A70	C10 - C30	C20	E01
All engines							2.8075	3.8106				
				ENGINE								
1.3 TC	Petrol	48	10/71-10/73	--, 12 H								
Engine	Information				A10	A20	A40	A50	A70	C10 - C30	C20	E01
All engines							2.8075	3.8106				
16/60												
				ENGINE								
1.6	Petrol	46	01/61-12/71	--								
Engine	Information				A10	A20	A40	A50	A70	C10 - C30	C20	E01
All engines							2.8075	3.8106				
18/85												
				ENGINE								
1.8	Petrol	64	08/69-12/72	--, 18HL								
Engine	Information				A10	A20	A40	A50	A70	C10 - C30	C20	E01
All engines							2.8075	3.8106				
				ENGINE								
1.8 S	Petrol	71	01/70-12/72	--, 18HH								
Engine	Information				A10	A20	A40	A50	A70	C10 - C30	C20	E01
All engines							2.8075	3.8106				
HORNET												
				ENGINE								
1.0	Petrol	28	01/61-12/70	--, 99LFD								
Engine	Information				A10	A20	A40	A50	A70	C10 - C30	C20	E01
All engines						1.4683MHDV		3.8106				
SIX												
				ENGINE								
2.2	Petrol	82	01/72-10/75	--								
Engine	Information				A10	A20	A40	A50	A70	C10 - C30	C20	E01
All engines								3.8107				

A10	CONDENSER	**A20**	CONTACT SET	**A40**	DISTRIBUTOR CAP	**A50**	ROTOR	**A70**	PICK-UP
C10	COIL	**C20**	IGNITION MODULE	**C30**	ELECTRONIC IGNITION KIT	**E01**	IGNITION CABLE SET		

The present application list is a brief version. For the detailed information about the possibility of installation on a specific vehicle, please refer to our web-catalogue http://catalogo.facet.eu/

Vehicle	alim.	kW	Date	Engine	FUNCTIONS ON THE VEHICLE							
					A10	A20	A40	A50	A70	C10 - C30	C20	E01
311												
				ENGINE								
1.1	Petrol	41	04/83-04/91	128A4								
Engine	Information				A10	A20	A40	A50	A70	C10 - C30	C20	E01
All engines						1.2529HDV						
511												
				ENGINE								
1.1	Petrol	41	04/83-04/91	128A4								
Engine	Information				A10	A20	A40	A50	A70	C10 - C30	C20	E01
All engines						1.2529HDV						

A10	CONDENSER	**A20**	CONTACT SET	**A40**	DISTRIBUTOR CAP	**A50**	ROTOR	**A70**	PICK-UP
C10	COIL	**C20**	IGNITION MODULE	**C30**	ELECTRONIC IGNITION KIT	**E01**	IGNITION CABLE SET		

The present application list is a brief version. For the detailed information about the possibility of installation on a specific vehicle, please refer to our web-catalogue http://catalogo.facet.eu/

Vehicle	alim.	kW	Date	Engine	FUNCTIONS ON THE VEHICLE							
					A10	A20	A40	A50	A70	C10 - C30	C20	E01

101

				ENGINE
1.1	Petrol	37	12/75-01/80	128 A.000

Engine	Information	A10	A20	A40	A50	A70	C10 - C30		C20	E01
All engines			1.4940	2.8181	3.8236RS		9.6001D	C10		

				ENGINE
1.1	Petrol	40	06/73-01/90	128 A.000

Engine	Information	A10	A20	A40	A50	A70	C10 - C30		C20	E01
All engines	version Cajavec		1.2805/1	2.7535/1PHT	3.7575/1RS					
All engines							9.6001D	C10		

				ENGINE
1.1	Petrol	41	05/75-12/93	128 A.064

Engine	Information	A10	A20	A40	A50	A70	C10 - C30		C20	E01
All engines			1.4940	2.8181	3.8236RS		9.6001D	C10		

				ENGINE
1.1 Super	Petrol	47	07/79-09/81	128 AC5.000

Engine	Information	A10	A20	A40	A50	A70	C10 - C30		C20	E01
All engines			1.4940	2.8181	3.8236RS		9.6001D	C10		

YUGO

				ENGINE
0.9	Petrol	33	04/80-06/92	9A

Engine	Information	A10	A20	A40	A50	A70	C10 - C30		C20	E01
All engines	version Cajavec		1.2805/1	2.7535/1PHT	3.7575/1RS					
All engines	version Marelli		1.4940		3.8236RS					

A10	CONDENSER	A20	CONTACT SET	A40	DISTRIBUTOR CAP	A50	ROTOR	A70	PICK-UP
C10	COIL	C20	IGNITION MODULE	C30	ELECTRONIC IGNITION KIT	E01	IGNITION CABLE SET		

The present application list is a brief version. For the detailed information about the possibility of installation on a specific vehicle, please refer to our web-catalogue http://catalogo.facet.eu/

GLOSSARY OF FUNCTIONS ON THE VEHICLE

FA-IGN22Q1

·GLOSSARIO PER FUNZIONI SU VETTURA ·GLOSSAIRE DES FONCTIONS SUR LE VÉHICULE ·GLOSSAR NACH FUNKTION IM AUTO · GLOSARIO DE LAS FUNCIONES EN LOS VEHICULOS

#	ENGLISH	ITALIANO	FRANÇAIS	DEUTSCH	ESPAÑOL
A10	**CONDENSERS**	CONDENSATORI	CONDENSATEURS	KONDENSATOREN	CONDENSADORES
A20	**CONTACT SET**	COPPIA CONTATTI	RUPTEUR	KONTAKTSATZ	PLATINOS
A40	**DISTRIBUTOR CAP**	CALOTTA	TETE D'ALLUMEUR	VERTEILERKAPPE	TAPA DEL DISTRIBUIDOR
A50	**ROTOR**	DISTRIBUTORE	DISRUPTEUR	VERTEILERLÄUFER	ROTOR DEL DISTRIBUIDOR
A70	**PICK-UP**	IMPULSORE	CAPTEUR	IMPULSGEBER	CAPTADOR
C10	**COIL**	BOBINA	BOBINE	ZÜNDSPULE	BOBINA
C20	**IGNITION MODULE**	MODULO DI ACCENSIONE	MODULES D'ALLUMAGE	ZÜNDUNGSMODUL	MÓDULO DE ENCENDIDO
C30	**ELECTRONIC IGNITION KIT**	KIT ACCENSIONE ELETTRONICA	KIT POUR ALLUMAGE ELECTRONIQUE	ELEKTRONISCHE ZÜNDUNGSSATZ	JUEGO DE ENCENDIDO ELECTRÓNICO
E01	**IGNITION CABLE SET**	SERIE CAVI COMPLETA	JEU CABLES D'ALLUMAGE	ZÜNDKABELSATZ	JUEGO DE CABLES DE ENCENDIDO

PRODUCTS BY VEHICLE MANUFACTURER

-ELENCO PRODOTTI PER MARCA -PRODUITS PAR FABRICANT VEHICULE -LISTE DER PRODUKTE JE NACH FAHRZEUGMARKE -PRODUCTOS POR FABRICANTE DE VEHÍCULO

ABARTH

A50

ROTOR
- DISTRIBUTORE
- DISRUPTEUR
- VERTEILERLÄUFER
- ROTOR DEL DISTRIBUIDOR

3.8254RS

A70

PICK-UP
- IMPULSORE
- CAPTEUR
- IMPULSGEBER
- CAPTADOR

8.4961/1

C10

COIL
- BOBINA
- BOBINE
- ZÜNDSPULE
- BOBINA

9.6449

ACURA

A40

DISTRIBUTOR CAP
- CALOTTA
- TETE D'ALLUMEUR
- VERTEILERKAPPE
- TAPA DEL DISTRIBUIDOR

2.7968
2.7969
2.7984

A50

ROTOR
- DISTRIBUTORE
- DISRUPTEUR
- VERTEILERLÄUFER
- ROTOR DEL DISTRIBUIDOR

3.7956
3.7982
3.7995
3.7995, 3.7997RS

C10

COIL
- BOBINA
- BOBINE
- ZÜNDSPULE
- BOBINA

9.6112
9.6113
9.6114
9.6115

C20

IGNITION MODULE
- MODULO DI ACCENSIONE
- MODULES D'ALLUMAGE
- ZÜNDUNGSMODUL
- MÓDULO DE ENCENDIDO

9.4052

ALFA ROMEO

A10

CONDENSER
- CONDENSATORE
- CONDENSATEUR
- KONDENSATOR
- CONDENSADOR

0.0334
0.0617

A20

CONTACT SET
- COPPIA CONTATTI
- RUPTEUR
- KONTAKTSATZ
- PLATINOS

1.2529HDV
1.2534HDVS
1.2547

A40

DISTRIBUTOR CAP
- CALOTTA
- TETE D'ALLUMEUR
- VERTEILERKAPPE
- TAPA DEL DISTRIBUIDOR

2.7462
2.7476PHT
2.7479PHT
2.7481PHT
2.7530/6PHT
2.7649PHT
2.7654PHT
2.8215PHT

A50

ROTOR
- DISTRIBUTORE
- DISRUPTEUR
- VERTEILERLÄUFER
- ROTOR DEL DISTRIBUIDOR

3.7524RS
3.7525RS
3.7555RS
3.7561RS
3.7573/13RS
3.7573/19RS
3.7573/21RS
3.7573/23RS
3.8242RS
3.8251RS
3.8254RS
3.8255RS
3.8259

A70

PICK-UP
- IMPULSORE
- CAPTEUR
- IMPULSGEBER
- CAPTADOR

8.2653

C10

COIL
- BOBINA
- BOBINE
- ZÜNDSPULE
- BOBINA

9.6001D
9.6046
9.6068
9.6213
9.6286
9.6286K
9.6287
9.6287K
9.6297
9.6297K
9.6323
9.6342
9.6350
9.6449

C20

IGNITION MODULE
- MODULO DI ACCENSIONE
- MODULES D'ALLUMAGE
- ZÜNDUNGSMODUL
- MÓDULO DE ENCENDIDO

9.4005

E01

IGNITION CABLE SET
- SERIE CAVI COMPLETA
- JEU CABLES D'ALLUMAGE
- ZÜNDKABELSATZ
- JUEGO DE CABLES DE ENCENDIDO

4.7170
4.8623
4.8660
4.8666
4.8716
4.9607
4.9608

ALPINA

C10

COIL
- BOBINA
- BOBINE
- ZÜNDSPULE
- BOBINA

9.6375

ALPINE

A40

DISTRIBUTOR CAP
- CALOTTA
- TETE D'ALLUMEUR
- VERTEILERKAPPE
- TAPA DEL DISTRIBUIDOR

2.7530/6PHT

A50

ROTOR
- DISTRIBUTORE
- DISRUPTEUR
- VERTEILERLÄUFER
- ROTOR DEL DISTRIBUIDOR

3.7523RS
3.7573/19RS

C10

COIL
- BOBINA
- BOBINE
- ZÜNDSPULE
- BOBINA

9.6007

ASTON MARTIN

A20

CONTACT SET
- COPPIA CONTATTI
- RUPTEUR
- KONTAKTSATZ
- PLATINOS

1.4683MHDV

A50

ROTOR
- DISTRIBUTORE
- DISRUPTEUR
- VERTEILERLÄUFER
- ROTOR DEL DISTRIBUIDOR

3.8107

C10

COIL
- BOBINA
- BOBINE
- ZÜNDSPULE
- BOBINA

9.6437

AUDI

A20

CONTACT SET
- COPPIA CONTATTI
- RUPTEUR
- KONTAKTSATZ
- PLATINOS

1.2529HDV

A40

DISTRIBUTOR CAP
- CALOTTA
- TETE D'ALLUMEUR
- VERTEILERKAPPE
- TAPA DEL DISTRIBUIDOR

2.7479PHT
2.7493PHT
2.7494PHT
2.7529PHT
2.7530/18PHT
2.7530/1PHT
2.7530/36PHT
2.7668PHT

A50

ROTOR
- DISTRIBUTORE
- DISRUPTEUR
- VERTEILERLÄUFER
- ROTOR DEL DISTRIBUIDOR

3.7521RS
3.7555RS
3.7559RS
3.7573/16RS
3.7573/21RS
3.7699RS

A70

PICK-UP
- IMPULSORE
- CAPTEUR
- IMPULSGEBER
- CAPTADOR

8.2719
8.2723
8.2731

C10

COIL
- BOBINA
- BOBINE
- ZÜNDSPULE
- BOBINA

9.6025
9.6026
9.6027
9.6032
9.6254S
9.6322
9.6326
9.6327
9.6329
9.6333
9.6334
9.6336
9.6345
9.6374
9.6499
9.6536

PRODUCTS BY VEHICLE MANUFACTURER

-ELENCO PRODOTTI PER MARCA -PRODUITS PAR FABRICANT VEHICULE -LISTE DER PRODUKTE JE NACH FAHRZEUGMARKE -PRODUCTOS POR FABRICANTE DE VEHÍCULO

C20

IGNITION MODULE
- MODULO DI ACCENSIONE
- MODULES D'ALLUMAGE
- ZÜNDUNGSMODUL
- MÓDULO DE ENCENDIDO

9.4004
9.4007
9.4051
9.4072
9.4076

C30

ELECTRONIC IGNITION KIT
- KIT ACCENSIONE ELETTRONICA
- KIT POUR ALLUMAGE ELECTRONIQUE
- ELEKTRONISCHE ZÜNDUNGSSATZ
- JUEGO DE ENCENDIDO ELECTRÓNICO

9.8114
9.8120

E01

IGNITION CABLE SET
- SERIE CAVI COMPLETA
- JEU CABLES D'ALLUMAGE
- ZÜNDKABELSATZ
- JUEGO DE CABLES DE ENCENDIDO

4.7248
4.8768
4.9353
4.9356
4.9479
4.9484
4.9489
4.9491
4.9575
4.9585
4.9682

AUSTIN

A20

CONTACT SET
- COPPIA CONTATTI
- RUPTEUR
- KONTAKTSATZ
- PLATINOS

1.4683MHDV

A40

DISTRIBUTOR CAP
- CALOTTA
- TETE D'ALLUMEUR
- VERTEILERKAPPE
- TAPA DEL DISTRIBUIDOR

2.8075
2.8093PHT
2.8094PHT

A50

ROTOR
- DISTRIBUTORE
- DISRUPTEUR
- VERTEILERLÄUFER
- ROTOR DEL DISTRIBUIDOR

3.8106
3.8124RS
3.8125

AUSTIN-HEALEY

A50

ROTOR
- DISTRIBUTORE
- DISRUPTEUR
- VERTEILERLÄUFER
- ROTOR DEL DISTRIBUIDOR

3.8106
3.8107

BEDFORD

A50

ROTOR
- DISTRIBUTORE
- DISRUPTEUR
- VERTEILERLÄUFER
- ROTOR DEL DISTRIBUIDOR

3.7590

BENTLEY

C10

COIL
- BOBINA
- BOBINE
- ZÜNDSPULE
- BOBINA

9.6536

BMW

A20

CONTACT SET
- COPPIA CONTATTI
- RUPTEUR
- KONTAKTSATZ
- PLATINOS

1.2529HDV
1.2562

A40

DISTRIBUTOR CAP
- CALOTTA
- TETE D'ALLUMEUR
- VERTEILERKAPPE
- TAPA DEL DISTRIBUIDOR

2.7462
2.7481PHT
2.7494PHT
2.7521PHT
2.7530/17PHT
2.7530/8PHT

A50

ROTOR
- DISTRIBUTORE
- DISRUPTEUR
- VERTEILERLÄUFER
- ROTOR DEL DISTRIBUIDOR

3.7518RS
3.7555RS
3.7555RS,
3.7573/15RS
3.7560RS,
3.7573/12RS
3.7573/12RS
3.7573/15RS
3.7573/19RS

C10

COIL
- BOBINA
- BOBINE
- ZÜNDSPULE
- BOBINA

9.6012
9.6062S
9.6252
9.6312
9.6313
9.6375
9.6507
9.6532

C20

IGNITION MODULE
- MODULO DI ACCENSIONE
- MODULES D'ALLUMAGE
- ZÜNDUNGSMODUL
- MÓDULO DE ENCENDIDO

9.4005

E01

IGNITION CABLE SET
- SERIE CAVI COMPLETA
- JEU CABLES D'ALLUMAGE
- ZÜNDKABELSATZ
- JUEGO DE CABLES DE ENCENDIDO

4.7069
4.8572
4.8573
4.8578
4.8587
4.8597
4.8605
4.8900
4.9921

BOND

A40

DISTRIBUTOR CAP
- CALOTTA
- TETE D'ALLUMEUR
- VERTEILERKAPPE
- TAPA DEL DISTRIBUIDOR

2.8075

A50

ROTOR
- DISTRIBUTORE
- DISRUPTEUR
- VERTEILERLÄUFER
- ROTOR DEL DISTRIBUIDOR

3.7590, 3.8107
3.8106

BORGWARD

A50

ROTOR
- DISTRIBUTORE
- DISRUPTEUR
- VERTEILERLÄUFER
- ROTOR DEL DISTRIBUIDOR

3.7518RS

CHEVROLET

A40

DISTRIBUTOR CAP
- CALOTTA
- TETE D'ALLUMEUR
- VERTEILERKAPPE
- TAPA DEL DISTRIBUIDOR

2.8322/39
2.8322/72

A50

ROTOR
- DISTRIBUTORE
- DISRUPTEUR
- VERTEILERLÄUFER
- ROTOR DEL DISTRIBUIDOR

3.8331/31
3.8331/39

C10

COIL
- BOBINA
- BOBINE
- ZÜNDSPULE
- BOBINA

9.6119
9.6445
9.6447
9.6485

E01

IGNITION CABLE SET
- SERIE CAVI COMPLETA
- JEU CABLES D'ALLUMAGE
- ZÜNDKABELSATZ
- JUEGO DE CABLES DE ENCENDIDO

4.7006
4.7007
4.7247
4.7249
4.9509
4.9634
4.9677
4.9680
4.9730
4.9731

CHRYSLER

A40

DISTRIBUTOR CAP
- CALOTTA
- TETE D'ALLUMEUR
- VERTEILERKAPPE
- TAPA DEL DISTRIBUIDOR

2.8322/16
2.8322/61

A50

ROTOR
- DISTRIBUTORE
- DISRUPTEUR
- VERTEILERLÄUFER
- ROTOR DEL DISTRIBUIDOR

3.7579
3.8331/9

C10

COIL
- BOBINA
- BOBINE
- ZÜNDSPULE
- BOBINA

9.6317
9.6323
9.6449

E01

IGNITION CABLE SET
- SERIE CAVI COMPLETA
- JEU CABLES D'ALLUMAGE
- ZÜNDKABELSATZ
- JUEGO DE CABLES DE ENCENDIDO

4.9343
4.9345
4.9507
4.9508
4.9511
4.9511, 4.9764
4.9719
4.9990

PRODUCTS BY VEHICLE MANUFACTURER

-ELENCO PRODOTTI PER MARCA -PRODUITS PAR FABRICANT VEHICULE -LISTE DER PRODUKTE JE NACH FAHRZEUGMARKE -PRODUCTOS POR FABRICANTE DE VEHÍCULO

CITROËN

A10

CONDENSER
- CONDENSATORE
- CONDENSATEUR
- KONDENSATOR
- CONDENSADOR

0.0334

A20

CONTACT SET
- COPPIA CONTATTI
- RUPTEUR
- KONTAKTSATZ
- PLATINOS

1.3664

A40

DISTRIBUTOR CAP
- CALOTTA
- TETE D'ALLUMEUR
- VERTEILERKAPPE
- TAPA DEL DISTRIBUIDOR

2.7524PHT
2.7530/11PHT
2.7530/22PHT
2.7658PHT
2.7659PHT
2.7667PHT
2.7674PHT
2.7677PHT
2.7678PHT
2.7687

A50

ROTOR
- DISTRIBUTORE
- DISRUPTEUR
- VERTEILERLÄUFER
- ROTOR DEL DISTRIBUIDOR

3.7556RS
3.7561RS
3.7573/19RS
3.7683RS
3.7688
3.7691
3.7694
3.7702RS
3.7704
3.8260

A70

PICK-UP
- IMPULSORE
- CAPTEUR
- IMPULSGEBER
- CAPTADOR

8.3617
8.3619

C10

COIL
- BOBINA
- BOBINE
- ZÜNDSPULE
- BOBINA

9.6005
9.6006
9.6055
9.6068
9.6088
9.6089
9.6303
9.6305
9.6307
9.6308
9.6359
9.6361
9.6375
9.6376
9.6383
9.6397
9.6405
9.6409
9.6509
9.6520

C20

IGNITION MODULE
- MODULO DI ACCENSIONE
- MODULES D'ALLUMAGE
- ZÜNDUNGSMODUL
- MÓDULO DE ENCENDIDO

9.4005
9.4034

E01

IGNITION CABLE SET
- SERIE CAVI COMPLETA
- JEU CABLES D'ALLUMAGE
- ZÜNDKABELSATZ
- JUEGO DE CABLES DE ENCENDIDO

4.8491
4.8494
4.8655
4.8674
4.8747
4.9374
4.9376

CUPRA

C10

COIL
- BOBINA
- BOBINE
- ZÜNDSPULE
- BOBINA

9.6499
9.6536

DACIA

A10

CONDENSER
- CONDENSATORE
- CONDENSATEUR
- KONDENSATOR
- CONDENSADOR

0.0323

A20

CONTACT SET
- COPPIA CONTATTI
- RUPTEUR
- KONTAKTSATZ
- PLATINOS

1.3655
1.3691/1

A40

DISTRIBUTOR CAP
- CALOTTA
- TETE D'ALLUMEUR
- VERTEILERKAPPE
- TAPA DEL DISTRIBUIDOR

2.7649PHT
2.7654PHT

A50

ROTOR
- DISTRIBUTORE
- DISRUPTEUR
- VERTEILERLÄUFER
- ROTOR DEL DISTRIBUIDOR

3.7691

C10

COIL
- BOBINA
- BOBINE
- ZÜNDSPULE
- BOBINA

9.6001D
9.6332
9.6418
9.6452
9.6496
9.6513

E01

IGNITION CABLE SET
- SERIE CAVI COMPLETA
- JEU CABLES D'ALLUMAGE
- ZÜNDKABELSATZ
- JUEGO DE CABLES DE ENCENDIDO

4.7244
4.7246
4.7252
4.8511

DAEWOO

A40

DISTRIBUTOR CAP
- CALOTTA
- TETE D'ALLUMEUR
- VERTEILERKAPPE
- TAPA DEL DISTRIBUIDOR

2.7575PHT
2.8322/39
2.8322/72

A50

ROTOR
- DISTRIBUTORE
- DISRUPTEUR
- VERTEILERLÄUFER
- ROTOR DEL DISTRIBUIDOR

3.7598
3.8331/31
3.8331/39

C10

COIL
- BOBINA
- BOBINE
- ZÜNDSPULE
- BOBINA

9.6119
9.6216
9.6485

E01

IGNITION CABLE SET
- SERIE CAVI COMPLETA
- JEU CABLES D'ALLUMAGE
- ZÜNDKABELSATZ
- JUEGO DE CABLES DE ENCENDIDO

4.7006
4.7007
4.9433
4.9509
4.9634
4.9677
4.9680
4.9730
4.9731
4.9942

DAIHATSU

A20

CONTACT SET
- COPPIA CONTATTI
- RUPTEUR
- KONTAKTSATZ
- PLATINOS

1.3511HDV

A40

DISTRIBUTOR CAP
- CALOTTA
- TETE D'ALLUMEUR
- VERTEILERKAPPE
- TAPA DEL DISTRIBUIDOR

2.7594

A40

2.7628
2.7630/27
2.7630/28

A50

ROTOR
- DISTRIBUTORE
- DISRUPTEUR
- VERTEILERLÄUFER
- ROTOR DEL DISTRIBUIDOR

3.7614
3.7628
3.7629
3.7630

C10

COIL
- BOBINA
- BOBINE
- ZÜNDSPULE
- BOBINA

9.6152
9.6361
9.6437

E01

IGNITION CABLE SET
- SERIE CAVI COMPLETA
- JEU CABLES D'ALLUMAGE
- ZÜNDKABELSATZ
- JUEGO DE CABLES DE ENCENDIDO

4.9436
4.9732

DAIMLER

A50

ROTOR
- DISTRIBUTORE
- DISRUPTEUR
- VERTEILERLÄUFER
- ROTOR DEL DISTRIBUIDOR

3.8107

DS

C10

COIL
- BOBINA
- BOBINE
- ZÜNDSPULE
- BOBINA

9.6375
9.6509
9.6520

PRODUCTS BY VEHICLE MANUFACTURER

-ELENCO PRODOTTI PER MARCA -PRODUITS PAR FABRICANT VEHICULE -LISTE DER PRODUKTE JE NACH FAHRZEUGMARKE -PRODUCTOS POR FABRICANTE DE VEHÍCULO

FIAT

A10

CONDENSER
- CONDENSATORE
- CONDENSATEUR
- KONDENSATOR
- CONDENSADOR

0.0323
0.0334
0.0339
0.0617
0.0627
0.0628

A20

CONTACT SET
- COPPIA CONTATTI
- RUPTEUR
- KONTAKTSATZ
- PLATINOS

1.3655
1.3656
1.3656HDV
1.3691/1
1.3691/22
1.3691/5
1.3691/6
1.3720
1.4920
1.4932
1.4939
1.4940
1.4942
1.4946M
1.4949M
1.4950M

A40

DISTRIBUTOR CAP
- CALOTTA
- TETE D'ALLUMEUR
- VERTEILERKAPPE
- TAPA DEL DISTRIBUIDOR

2.7479PHT
2.7645
2.7649PHT
2.7654PHT
2.7658PHT
2.7659PHT
2.7680PHT
2.7687
2.7716
2.8159
2.8169
2.8181
2.8182
2.8186
2.8190
2.8193
2.8198PHT
2.8201PHT
2.8204PHT

A40

2.8209PHT
2.8214PHT
2.8215PHT

A50

ROTOR
- DISTRIBUTORE
- DISRUPTEUR
- VERTEILERLÄUFER
- ROTOR DEL DISTRIBUIDOR

3.7525RS
3.7561RS
3.7683RS
3.7691
3.7694
3.7696RS
3.7752
3.7752RS
3.8229
3.8236RS
3.8237
3.8237RS
3.8240
3.8241
3.8242RS
3.8247RS
3.8247RS, 3.8260
3.8254RS
3.8255RS
3.8257RS
3.8259
3.8260

A70

PICK-UP
- IMPULSORE
- CAPTEUR
- IMPULSGEBER
- CAPTADOR

8.2653
8.3619
8.4961/1
8.4976M
8.4977/1
8.4980M

C10

COIL
- BOBINA
- BOBINE
- ZÜNDSPULE
- BOBINA

9.6001D
9.6002
9.6003
9.6008
9.6046
9.6048
9.6058
9.6068
9.6088
9.6214
9.6245

C10

9.6284
9.6305
9.6308
9.6316
9.6323
9.6342
9.6350
9.6449
9.6470

C20

IGNITION MODULE
- MODULO DI ACCENSIONE
- MODULES D'ALLUMAGE
- ZÜNDUNGSMODUL
- MÓDULO DE ENCENDIDO

9.4005
9.4020
9.4029

C30

ELECTRONIC IGNITION KIT
- KIT ACCENSIONE ELETTRONICA
- KIT POUR ALLUMAGE ELECTRONIQUE
- ELEKTRONISCHE ZÜNDUNGSSATZ
- JUEGO DE ENCENDIDO ELECTRÓNICO

9.8003

E01

IGNITION CABLE SET
- SERIE CAVI COMPLETA
- JEU CABLES D'ALLUMAGE
- ZÜNDKABELSATZ
- JUEGO DE CABLES DE ENCENDIDO

4.7013
4.7170
4.8347
4.8351
4.8354
4.8386
4.8398
4.8429
4.8432
4.8456
4.8466
4.8494
4.8507
4.8613
4.8615
4.8616
4.8650
4.8655
4.8674
4.8692
4.8694
4.8700
4.8808
4.8815
4.8887
4.8888
4.8889
4.9363
4.9451

E01

4.9503
4.9504
4.9505
4.9527

FIAT (BR)

A40

DISTRIBUTOR CAP
- CALOTTA
- TETE D'ALLUMEUR
- VERTEILERKAPPE
- TAPA DEL DISTRIBUIDOR

2.8201PHT
2.8214PHT
2.8215PHT

A50

ROTOR
- DISTRIBUTORE
- DISRUPTEUR
- VERTEILERLÄUFER
- ROTOR DEL DISTRIBUIDOR

3.8255RS
3.8259
3.8260

A70

PICK-UP
- IMPULSORE
- CAPTEUR
- IMPULSGEBER
- CAPTADOR

8.4977/1

C10

COIL
- BOBINA
- BOBINE
- ZÜNDSPULE
- BOBINA

9.6046
9.6068
9.6214
9.6245
9.6284
9.6316

C30

ELECTRONIC IGNITION KIT
- KIT ACCENSIONE ELETTRONICA
- KIT POUR ALLUMAGE ELECTRONIQUE
- ELEKTRONISCHE ZÜNDUNGSSATZ
- JUEGO DE ENCENDIDO ELECTRÓNICO

9.8003

E01

IGNITION CABLE SET
- SERIE CAVI COMPLETA
- JEU CABLES D'ALLUMAGE
- ZÜNDKABELSATZ
- JUEGO DE CABLES DE ENCENDIDO

E01

4.8650
4.8655
4.9503
4.9505

FORD

A20

CONTACT SET
- COPPIA CONTATTI
- RUPTEUR
- KONTAKTSATZ
- PLATINOS

1.2521
1.2549HDVS
1.4143HDV
1.4144HDV
1.4683MHDV

A40

DISTRIBUTOR CAP
- CALOTTA
- TETE D'ALLUMEUR
- VERTEILERKAPPE
- TAPA DEL DISTRIBUIDOR

2.7462
2.7479PHT
2.7479PHT, 2.7509PHT
2.7481PHT
2.7509PHT
2.7530/23PHT
2.7530/5PHT
2.7783
2.7792PHT
2.7946
2.7989
2.8070
2.8070, 2.8075
2.8075
2.8083PHT
2.8096PHT
2.8198PHT
2.8201PHT
2.8322/21

A50

ROTOR
- DISTRIBUTORE
- DISRUPTEUR
- VERTEILERLÄUFER
- ROTOR DEL DISTRIBUIDOR

3.7512RS
3.7518RS
3.7525RS
3.7560RS
3.7560RS, 3.7561RS
3.7561RS
3.7573/12RS
3.7573/21RS

marketing@facet.it

PRODUCTS BY VEHICLE MANUFACTURER

-ELENCO PRODOTTI PER MARCA -PRODUITS PAR FABRICANT VEHICULE -LISTE DER PRODUKTE JE NACH FAHRZEUGMARKE -PRODUCTOS POR FABRICANTE DE VEHÍCULO

A50
3.7573/40RS
3.7885
3.7892
3.7894RS
3.7970
3.8002
3.8106
3.8107
3.8126RS
3.8257RS
3.8331/32
3.8331/37

A70
PICK-UP
- IMPULSORE
- CAPTEUR
- IMPULSGEBER
- CAPTADOR

8.2733

C10
COIL
- BOBINA
- BOBINE
- ZÜNDSPULE
- BOBINA

9.6035
9.6035, 9.6212
9.6069
9.6069, 9.6212
9.6070
9.6189
9.6199
9.6199, 9.6212
9.6199S
9.6212
9.6212, 9.6264
9.6264
9.6266S
9.6323
9.6335
9.6378
9.6380
9.6381
9.6432
9.6519
9.6523

E01
IGNITION CABLE SET
- SERIE CAVI COMPLETA
- JEU CABLES D'ALLUMAGE
- ZÜNDKABELSATZ
- JUEGO DE CABLES DE ENCENDIDO

4.7170
4.7208
4.7214
4.7242
4.8864
4.9007
4.9078
4.9145

E01
4.9281
4.9568
4.9619
4.9624
4.9625
4.9630
4.9639
4.9789
4.9976

FORD (BR)

C10
COIL
- BOBINA
- BOBINE
- ZÜNDSPULE
- BOBINA

9.6432

E01
IGNITION CABLE SET
- SERIE CAVI COMPLETA
- JEU CABLES D'ALLUMAGE
- ZÜNDKABELSATZ
- JUEGO DE CABLES DE ENCENDIDO

4.9691

FORD AUSTRALIA

A20
CONTACT SET
- COPPIA CONTATTI
- RUPTEUR
- KONTAKTSATZ
- PLATINOS

1.2534HDVS

A40
DISTRIBUTOR CAP
- CALOTTA
- TETE D'ALLUMEUR
- VERTEILERKAPPE
- TAPA DEL DISTRIBUIDOR

2.7479PHT
2.7530/14PHT
2.7977, 2.7992
2.8303/1
2.8303/1, 2.8322/18, 2.8322/9
2.8303/1, 2.8322/9
2.8322/31
2.8322/37, 2.8322/49
2.8322/50
2.8322/9

A50
ROTOR
- DISTRIBUTORE
- DISRUPTEUR
- VERTEILERLÄUFER
- ROTOR DEL DISTRIBUIDOR

3.7512RS
3.7573/31
3.7994, 3.8002
3.8323
3.8331/19
3.8331/32
3.8331/33, 3.8331/34

C10
COIL
- BOBINA
- BOBINE
- ZÜNDSPULE
- BOBINA

9.6070

FORD USA

A40
DISTRIBUTOR CAP
- CALOTTA
- TETE D'ALLUMEUR
- VERTEILERKAPPE
- TAPA DEL DISTRIBUIDOR

2.8322/37

A50
ROTOR
- DISTRIBUTORE
- DISRUPTEUR
- VERTEILERLÄUFER
- ROTOR DEL DISTRIBUIDOR

3.8331/33
3.8331/34

C10
COIL
- BOBINA
- BOBINE
- ZÜNDSPULE
- BOBINA

9.6070
9.6189

FSO

A10
CONDENSER
- CONDENSATORE
- CONDENSATEUR
- KONDENSATOR
- CONDENSADOR

0.0628

A20
CONTACT SET
- COPPIA CONTATTI
- RUPTEUR
- KONTAKTSATZ
- PLATINOS

1.4920
1.4927
1.4946M
1.4950M
1.7350

A40
DISTRIBUTOR CAP
- CALOTTA
- TETE D'ALLUMEUR
- VERTEILERKAPPE
- TAPA DEL DISTRIBUIDOR

2.8186

A50
ROTOR
- DISTRIBUTORE
- DISRUPTEUR
- VERTEILERLÄUFER
- ROTOR DEL DISTRIBUIDOR

3.8240

C10
COIL
- BOBINA
- BOBINE
- ZÜNDSPULE
- BOBINA

9.6001D

GINETTA

A50
ROTOR
- DISTRIBUTORE
- DISRUPTEUR
- VERTEILERLÄUFER
- ROTOR DEL DISTRIBUIDOR

3.8106

HOLDEN

A20
CONTACT SET
- COPPIA CONTATTI
- RUPTEUR
- KONTAKTSATZ
- PLATINOS

1.2534HDVS
1.3511HDV
1.4456HDV

A40
DISTRIBUTOR CAP
- CALOTTA
- TETE D'ALLUMEUR
- VERTEILERKAPPE
- TAPA DEL DISTRIBUIDOR

2.7480PHT
2.7512PHT
2.7530/26PHT
2.7530/27PHT
2.7575PHT
2.7592
2.7593
2.7630/24
2.7630/35
2.7630/37
2.7630/48
2.7903
2.7957
2.7960
2.8100PHT
2.8322/31
2.8322/32

A50
ROTOR
- DISTRIBUTORE
- DISRUPTEUR
- VERTEILERLÄUFER
- ROTOR DEL DISTRIBUIDOR

3.7556RS
3.7573/21RS
3.7573/27RS
3.7573/31
3.7598
3.7614
3.7627
3.7628
3.7629
3.7630
3.7952
3.7969
3.8128RS
3.8331/19
3.8331/8

C10
COIL
- BOBINA
- BOBINE
- ZÜNDSPULE
- BOBINA

9.6040
9.6097
9.6098
9.6099
9.6119
9.6172
9.6173

PRODUCTS BY VEHICLE MANUFACTURER

-ELENCO PRODOTTI PER MARCA -PRODUITS PAR FABRICANT VEHICULE -LISTE DER PRODUKTE JE NACH FAHRZEUGMARKE -PRODUCTOS POR FABRICANTE DE VEHÍCULO

C20

IGNITION MODULE
- MODULO DI ACCENSIONE
- MODULES D'ALLUMAGE
- ZÜNDUNGSMODUL
- MÓDULO DE ENCENDIDO

9.4036

E01

IGNITION CABLE SET
- SERIE CAVI COMPLETA
- JEU CABLES D'ALLUMAGE
- ZÜNDKABELSATZ
- JUEGO DE CABLES DE ENCENDIDO

4.7020
4.8688
4.8689
4.9209
4.9237
4.9562
4.9793
4.9947

HONDA

A40

DISTRIBUTOR CAP
- CALOTTA
- TETE D'ALLUMEUR
- VERTEILERKAPPE
- TAPA DEL DISTRIBUIDOR

2.7922
2.7960
2.7968
2.7969
2.7971
2.7976
2.7976, 2.7982
2.7982
2.7993
2.8106

A50

ROTOR
- DISTRIBUTORE
- DISRUPTEUR
- VERTEILERLÄUFER
- ROTOR DEL DISTRIBUIDOR

3.7956
3.7969
3.7981
3.7982
3.7992
3.7995
3.7995, 3.7998
3.7997RS
3.7998
3.8002

C10

COIL
- BOBINA
- BOBINE
- ZÜNDSPULE
- BOBINA

9.6068
9.6111
9.6112
9.6113
9.6114
9.6115
9.6116
9.6247
9.6357
9.6422
9.6427
9.6429
9.6429, 9.6508
9.6503
9.6508

C20

IGNITION MODULE
- MODULO DI ACCENSIONE
- MODULES D'ALLUMAGE
- ZÜNDUNGSMODUL
- MÓDULO DE ENCENDIDO

9.4052

E01

IGNITION CABLE SET
- SERIE CAVI COMPLETA
- JEU CABLES D'ALLUMAGE
- ZÜNDKABELSATZ
- JUEGO DE CABLES DE ENCENDIDO

4.9686
4.9699
4.9702
4.9709
4.9711

HYUNDAI

A20

CONTACT SET
- COPPIA CONTATTI
- RUPTEUR
- KONTAKTSATZ
- PLATINOS

1.5084

A40

DISTRIBUTOR CAP
- CALOTTA
- TETE D'ALLUMEUR
- VERTEILERKAPPE
- TAPA DEL DISTRIBUIDOR

2.7524PHT
2.8303/1
2.8322/16
2.8322/21
2.8322/70

A50

ROTOR
- DISTRIBUTORE
- DISRUPTEUR
- VERTEILERLÄUFER
- ROTOR DEL DISTRIBUIDOR

3.7573/21RS
3.8323
3.8331/38
3.8331/7
3.8331/9

A70

PICK-UP
- IMPULSORE
- CAPTEUR
- IMPULSGEBER
- CAPTADOR

8.2744

C10

COIL
- BOBINA
- BOBINE
- ZÜNDSPULE
- BOBINA

9.6294
9.6392
9.6395
9.6396
9.6443
9.6443, 9.6511
9.6456
9.6479
9.6480
9.6481
9.6482
9.6482, 9.6483
9.6482, 9.6484
9.6483
9.6484
9.6485
9.6486
9.6487
9.6511
9.6512
9.6514
9.6522
9.6538
9.6547

E01

IGNITION CABLE SET
- SERIE CAVI COMPLETA
- JEU CABLES D'ALLUMAGE
- ZÜNDKABELSATZ
- JUEGO DE CABLES DE ENCENDIDO

4.7111
4.7119
4.7120
4.7235
4.7236
4.7241
4.7255
4.9385

E01

4.9401

INFINITI

A40

DISTRIBUTOR CAP
- CALOTTA
- TETE D'ALLUMEUR
- VERTEILERKAPPE
- TAPA DEL DISTRIBUIDOR

2.7973
2.8322/51

A50

ROTOR
- DISTRIBUTORE
- DISRUPTEUR
- VERTEILERLÄUFER
- ROTOR DEL DISTRIBUIDOR

3.7985
3.8331/36

C10

COIL
- BOBINA
- BOBINE
- ZÜNDSPULE
- BOBINA

9.6433
9.6452
9.6526

INNOCENTI

A40

DISTRIBUTOR CAP
- CALOTTA
- TETE D'ALLUMEUR
- VERTEILERKAPPE
- TAPA DEL DISTRIBUIDOR

2.8201PHT
2.8204PHT
2.8214PHT
2.8215PHT

A50

ROTOR
- DISTRIBUTORE
- DISRUPTEUR
- VERTEILERLÄUFER
- ROTOR DEL DISTRIBUIDOR

3.8247RS, 3.8260
3.8259
3.8260

A70

PICK-UP
- IMPULSORE
- CAPTEUR
- IMPULSGEBER
- CAPTADOR

8.4976M
8.4977/1

C10

COIL
- BOBINA
- BOBINE
- ZÜNDSPULE
- BOBINA

9.6046
9.6048
9.6058
9.6088

C20

IGNITION MODULE
- MODULO DI ACCENSIONE
- MODULES D'ALLUMAGE
- ZÜNDUNGSMODUL
- MÓDULO DE ENCENDIDO

9.4020

E01

IGNITION CABLE SET
- SERIE CAVI COMPLETA
- JEU CABLES D'ALLUMAGE
- ZÜNDKABELSATZ
- JUEGO DE CABLES DE ENCENDIDO

4.8655

ISUZU

A40

DISTRIBUTOR CAP
- CALOTTA
- TETE D'ALLUMEUR
- VERTEILERKAPPE
- TAPA DEL DISTRIBUIDOR

2.7575PHT

A50

ROTOR
- DISTRIBUTORE
- DISRUPTEUR
- VERTEILERLÄUFER
- ROTOR DEL DISTRIBUIDOR

3.7598
3.7969

C10

COIL
- BOBINA
- BOBINE
- ZÜNDSPULE
- BOBINA

9.6119

PRODUCTS BY VEHICLE MANUFACTURER

-ELENCO PRODOTTI PER MARCA -PRODUITS PAR FABRICANT VEHICULE -LISTE DER PRODUKTE JE NACH FAHRZEUGMARKE -PRODUCTOS POR FABRICANTE DE VEHÍCULO

C20

IGNITION MODULE
- MODULO DI ACCENSIONE
- MODULES D'ALLUMAGE
- ZÜNDUNGSMODUL
- MÓDULO DE ENCENDIDO

9.4025

IVECO

C10

COIL
- BOBINA
- BOBINE
- ZÜNDSPULE
- BOBINA

9.6245
9.6342

JAGUAR

A20

CONTACT SET
- COPPIA CONTATTI
- RUPTEUR
- KONTAKTSATZ
- PLATINOS

1.4683MHDV

A40

DISTRIBUTOR CAP
- CALOTTA
- TETE D'ALLUMEUR
- VERTEILERKAPPE
- TAPA DEL DISTRIBUIDOR

2.8098PHT
2.8210PHT

A50

ROTOR
- DISTRIBUTORE
- DISRUPTEUR
- VERTEILERLÄUFER
- ROTOR DEL DISTRIBUIDOR

3.8107
3.8127RS
3.8258

C10

COIL
- BOBINA
- BOBINE
- ZÜNDSPULE
- BOBINA

9.6070

JEEP

A40

DISTRIBUTOR CAP
- CALOTTA
- TETE D'ALLUMEUR
- VERTEILERKAPPE
- TAPA DEL DISTRIBUIDOR

2.7793PHT

A50

ROTOR
- DISTRIBUTORE
- DISRUPTEUR
- VERTEILERLÄUFER
- ROTOR DEL DISTRIBUIDOR

3.7892

C10

COIL
- BOBINA
- BOBINE
- ZÜNDSPULE
- BOBINA

9.6007
9.6449

E01

IGNITION CABLE SET
- SERIE CAVI COMPLETA
- JEU CABLES D'ALLUMAGE
- ZÜNDKABELSATZ
- JUEGO DE CABLES DE ENCENDIDO

4.7181

JENSEN

A40

DISTRIBUTOR CAP
- CALOTTA
- TETE D'ALLUMEUR
- VERTEILERKAPPE
- TAPA DEL DISTRIBUIDOR

2.8075

A50

ROTOR
- DISTRIBUTORE
- DISRUPTEUR
- VERTEILERLÄUFER
- ROTOR DEL DISTRIBUIDOR

3.8106

KIA

A40

DISTRIBUTOR CAP
- CALOTTA
- TETE D'ALLUMEUR
- VERTEILERKAPPE
- TAPA DEL DISTRIBUIDOR

2.8322/21
2.8322/22

A50

ROTOR
- DISTRIBUTORE
- DISRUPTEUR
- VERTEILERLÄUFER
- ROTOR DEL DISTRIBUIDOR

3.8331/8

C10

COIL
- BOBINA
- BOBINE
- ZÜNDSPULE
- BOBINA

9.6068
9.6119
9.6392
9.6395
9.6443
9.6443, 9.6511
9.6456
9.6479
9.6480
9.6480, 9.6487
9.6481
9.6482
9.6484
9.6486
9.6487
9.6489
9.6511
9.6512
9.6514
9.6522
9.6538
9.6547

E01

IGNITION CABLE SET
- SERIE CAVI COMPLETA
- JEU CABLES D'ALLUMAGE
- ZÜNDKABELSATZ
- JUEGO DE CABLES DE ENCENDIDO

4.7111
4.7119
4.7235
4.7236
4.7239
4.7241
4.9385
4.9398
4.9401
4.9841
4.9851

LADA

A20

CONTACT SET
- COPPIA CONTATTI
- RUPTEUR
- KONTAKTSATZ
- PLATINOS

1.7270
1.7271

A40

DISTRIBUTOR CAP
- CALOTTA
- TETE D'ALLUMEUR
- VERTEILERKAPPE
- TAPA DEL DISTRIBUIDOR

2.8625
2.8627PHT

A50

ROTOR
- DISTRIBUTORE
- DISRUPTEUR
- VERTEILERLÄUFER
- ROTOR DEL DISTRIBUIDOR

3.8714RS
3.8716RS

C10

COIL
- BOBINA
- BOBINE
- ZÜNDSPULE
- BOBINA

9.6001D
9.6332
9.6496
9.6513

E01

IGNITION CABLE SET
- SERIE CAVI COMPLETA
- JEU CABLES D'ALLUMAGE
- ZÜNDKABELSATZ
- JUEGO DE CABLES DE ENCENDIDO

4.8511

LANCIA

A10

CONDENSER
- CONDENSATORE
- CONDENSATEUR
- KONDENSATOR
- CONDENSADOR

0.0323

A20

CONTACT SET
- COPPIA CONTATTI
- RUPTEUR
- KONTAKTSATZ
- PLATINOS

1.3691/1

A40

DISTRIBUTOR CAP
- CALOTTA
- TETE D'ALLUMEUR
- VERTEILERKAPPE
- TAPA DEL DISTRIBUIDOR

2.7479PHT
2.7530/6PHT
2.7658PHT
2.7680PHT
2.8193
2.8198PHT
2.8201PHT
2.8201PHT, 2.8204PHT
2.8204PHT
2.8209PHT
2.8214PHT
2.8215PHT

A50

ROTOR
- DISTRIBUTORE
- DISRUPTEUR
- VERTEILERLÄUFER
- ROTOR DEL DISTRIBUIDOR

3.7523RS
3.7525RS
3.7573/19RS
3.7683RS
3.7694
3.8247RS
3.8254RS
3.8255RS
3.8255RS, 3.8259
3.8257RS
3.8257RS, 3.8260
3.8259
3.8260

A70

PICK-UP
- IMPULSORE
- CAPTEUR
- IMPULSGEBER
- CAPTADOR

8.4961/1
8.4963/1
8.4976M
8.4977/1
8.4980M

C10

COIL
- BOBINA
- BOBINE
- ZÜNDSPULE
- BOBINA

9.6001D
9.6003
9.6008
9.6026
9.6046
9.6048
9.6058
9.6068

PRODUCTS BY VEHICLE MANUFACTURER

-ELENCO PRODOTTI PER MARCA -PRODUITS PAR FABRICANT VEHICULE -LISTE DER PRODUKTE JE NACH FAHRZEUGMARKE -PRODUCTOS POR FABRICANTE DE VEHÍCULO

C10
9.6088
9.6213
9.6214
9.6245
9.6284
9.6308
9.6323
9.6342
9.6449

C20
IGNITION MODULE
- MODULO DI ACCENSIONE
- MODULES D'ALLUMAGE
- ZÜNDUNGSMODUL
- MÓDULO DE ENCENDIDO

9.4020
9.4029

C30
ELECTRONIC IGNITION KIT
- KIT ACCENSIONE ELETTRONICA
- KIT POUR ALLUMAGE ELECTRONIQUE
- ELEKTRONISCHE ZÜNDUNGSSATZ
- JUEGO DE ENCENDIDO ELECTRÓNICO

9.8003

E01
IGNITION CABLE SET
- SERIE CAVI COMPLETA
- JEU CABLES D'ALLUMAGE
- ZÜNDKABELSATZ
- JUEGO DE CABLES DE ENCENDIDO

4.7170
4.8347
4.8354
4.8398
4.8456
4.8471
4.8616
4.8650
4.8655
4.8692
4.8694
4.8700
4.8888
4.8889
4.9363
4.9451
4.9503
4.9504
4.9505

LAND ROVER

A10
CONDENSER
- CONDENSATORE
- CONDENSATEUR
- KONDENSATOR
- CONDENSADOR

A10
0.0334

A20
CONTACT SET
- COPPIA CONTATTI
- RUPTEUR
- KONTAKTSATZ
- PLATINOS

1.4683MHDV
1.4689

A40
DISTRIBUTOR CAP
- CALOTTA
- TETE D'ALLUMEUR
- VERTEILERKAPPE
- TAPA DEL DISTRIBUIDOR

2.7654PHT
2.8070, 2.8075
2.8078
2.8091PHT
2.8093PHT

A50
ROTOR
- DISTRIBUTORE
- DISRUPTEUR
- VERTEILERLÄUFER
- ROTOR DEL DISTRIBUIDOR

3.7691
3.8106
3.8112
3.8121, 3.8122
3.8122
3.8129RS

C10
COIL
- BOBINA
- BOBINE
- ZÜNDSPULE
- BOBINA

9.6001D
9.6068
9.6252
9.6274
9.6313

E01
IGNITION CABLE SET
- SERIE CAVI COMPLETA
- JEU CABLES D'ALLUMAGE
- ZÜNDKABELSATZ
- JUEGO DE CABLES DE ENCENDIDO

4.7107
4.9889
4.9900

LEXUS

C10
COIL
- BOBINA
- BOBINE
- ZÜNDSPULE
- BOBINA

9.6102
9.6103
9.6358
9.6366
9.6436
9.6437
9.6438

LOTUS

A40
DISTRIBUTOR CAP
- CALOTTA
- TETE D'ALLUMEUR
- VERTEILERKAPPE
- TAPA DEL DISTRIBUIDOR

2.8075

MAN

A40
DISTRIBUTOR CAP
- CALOTTA
- TETE D'ALLUMEUR
- VERTEILERKAPPE
- TAPA DEL DISTRIBUIDOR

2.7481PHT
2.7481PHT, 2.7530/28PHT

C10
COIL
- BOBINA
- BOBINE
- ZÜNDSPULE
- BOBINA

9.6317

MARUTI

A20
CONTACT SET
- COPPIA CONTATTI
- RUPTEUR
- KONTAKTSATZ
- PLATINOS

1.3511HDV

A40
DISTRIBUTOR CAP
- CALOTTA
- TETE D'ALLUMEUR
- VERTEILERKAPPE
- TAPA DEL DISTRIBUIDOR

2.7607

A50
ROTOR
- DISTRIBUTORE
- DISRUPTEUR
- VERTEILERLÄUFER
- ROTOR DEL DISTRIBUIDOR

3.7630

MASERATI

A50
ROTOR
- DISTRIBUTORE
- DISRUPTEUR
- VERTEILERLÄUFER
- ROTOR DEL DISTRIBUIDOR

3.8254RS

MAZDA

A20
CONTACT SET
- COPPIA CONTATTI
- RUPTEUR
- KONTAKTSATZ
- PLATINOS

1.5084

A40
DISTRIBUTOR CAP
- CALOTTA
- TETE D'ALLUMEUR
- VERTEILERKAPPE
- TAPA DEL DISTRIBUIDOR

2.7977
2.7977, 2.7992
2.7988
2.7992
2.8303/1
2.8322/17
2.8322/18
2.8322/18, 2.8322/32
2.8322/21
2.8322/21, 2.8322/31
2.8322/22
2.8322/22, 2.8322/32
2.8322/25
2.8322/25, 2.8322/32
2.8322/31
2.8322/32
2.8322/37
2.8322/49
2.8322/50

A40
2.8322/54
2.8322/9

A50
ROTOR
- DISTRIBUTORE
- DISRUPTEUR
- VERTEILERLÄUFER
- ROTOR DEL DISTRIBUIDOR

3.7973
3.7994
3.7994, 3.8002
3.8002
3.8323
3.8331/13
3.8331/19
3.8331/19, 3.8331/8
3.8331/32
3.8331/32, 3.8331/37
3.8331/33
3.8331/34
3.8331/37
3.8331/8

C10
COIL
- BOBINA
- BOBINE
- ZÜNDSPULE
- BOBINA

9.6035
9.6035, 9.6212
9.6133
9.6189
9.6199
9.6199, 9.6212
9.6266S
9.6380
9.6381
9.6414
9.6416
9.6432
9.6527

C20
IGNITION MODULE
- MODULO DI ACCENSIONE
- MODULES D'ALLUMAGE
- ZÜNDUNGSMODUL
- MÓDULO DE ENCENDIDO

9.4073

E01
IGNITION CABLE SET
- SERIE CAVI COMPLETA
- JEU CABLES D'ALLUMAGE
- ZÜNDKABELSATZ
- JUEGO DE CABLES DE ENCENDIDO

4.7242
4.7245
4.8884
4.9231
4.9398

PRODUCTS BY VEHICLE MANUFACTURER

-ELENCO PRODOTTI PER MARCA -PRODUITS PAR FABRICANT VEHICULE -LISTE DER PRODUKTE JE NACH FAHRZEUGMARKE -PRODUCTOS POR FABRICANTE DE VEHÍCULO

E01

4.9729
4.9738
4.9739
4.9740
4.9741
4.9745
4.9760
4.9767

MERCEDES-BENZ

A20

CONTACT SET
- COPPIA CONTATTI
- RUPTEUR
- KONTAKTSATZ
- PLATINOS

1.2521
1.2521, 1.2529HDV
1.2529HDV
1.2529HDV, 1.2562
1.2534HDVS
1.2562

A40

DISTRIBUTOR CAP
- CALOTTA
- TETE D'ALLUMEUR
- VERTEILERKAPPE
- TAPA DEL DISTRIBUIDOR

2.7462
2.7479PHT
2.7490PHT
2.7492PHT
2.7508PHT
2.7523PHT
2.7530/4PHT
2.7530/7PHT
2.7530/9PHT

A50

ROTOR
- DISTRIBUTORE
- DISRUPTEUR
- VERTEILERLÄUFER
- ROTOR DEL DISTRIBUIDOR

3.7518RS
3.7521RS
3.7523RS
3.7524RS
3.7525RS
3.7534RS
3.7549RS
3.7555RS
3.7560RS
3.7573/21RS
3.7573/25RS
3.7573/26RS
3.7573/46RS

C10

COIL
- BOBINA
- BOBINE
- ZÜNDSPULE
- BOBINA

9.6001D
9.6078
9.6079
9.6080
9.6216
9.6216K
9.6217
9.6317
9.6317, 9.6387
9.6320
9.6387
9.6513
9.6526

E01

IGNITION CABLE SET
- SERIE CAVI COMPLETA
- JEU CABLES D'ALLUMAGE
- ZÜNDKABELSATZ
- JUEGO DE CABLES DE ENCENDIDO

4.7232
4.7234
4.9300
4.9305
4.9323
4.9649
4.9654
4.9657

MG

A20

CONTACT SET
- COPPIA CONTATTI
- RUPTEUR
- KONTAKTSATZ
- PLATINOS

1.4683MHDV

A40

DISTRIBUTOR CAP
- CALOTTA
- TETE D'ALLUMEUR
- VERTEILERKAPPE
- TAPA DEL DISTRIBUIDOR

2.8075
2.8093PHT

A50

ROTOR
- DISTRIBUTORE
- DISRUPTEUR
- VERTEILERLÄUFER
- ROTOR DEL DISTRIBUIDOR

3.8106
3.8107
3.8129RS

C10

COIL
- BOBINA
- BOBINE
- ZÜNDSPULE
- BOBINA

9.6274
9.6313

E01

IGNITION CABLE SET
- SERIE CAVI COMPLETA
- JEU CABLES D'ALLUMAGE
- ZÜNDKABELSATZ
- JUEGO DE CABLES DE ENCENDIDO

4.9888
4.9889

MINI

C10

COIL
- BOBINA
- BOBINE
- ZÜNDSPULE
- BOBINA

9.6375
9.6532

E01

IGNITION CABLE SET
- SERIE CAVI COMPLETA
- JEU CABLES D'ALLUMAGE
- ZÜNDKABELSATZ
- JUEGO DE CABLES DE ENCENDIDO

4.9719

MITSUBISHI

A20

CONTACT SET
- COPPIA CONTATTI
- RUPTEUR
- KONTAKTSATZ
- PLATINOS

1.5085

A40

DISTRIBUTOR CAP
- CALOTTA
- TETE D'ALLUMEUR
- VERTEILERKAPPE
- TAPA DEL DISTRIBUIDOR

2.7617
2.8303/1
2.8322/16
2.8322/31
2.8322/34
2.8322/34, 2.8322/58
2.8322/35
2.8322/38
2.8322/38, 2.8322/68

A40

2.8322/43
2.8322/47
2.8322/58
2.8322/68
2.8322/69

A50

ROTOR
- DISTRIBUTORE
- DISRUPTEUR
- VERTEILERLÄUFER
- ROTOR DEL DISTRIBUIDOR

3.7630
3.8323
3.8331/19
3.8331/31
3.8331/34
3.8331/36
3.8331/36, 3.8331/37
3.8331/37
3.8331/7
3.8331/9

C10

COIL
- BOBINA
- BOBINE
- ZÜNDSPULE
- BOBINA

9.6397
9.6403
9.6405

E01

IGNITION CABLE SET
- SERIE CAVI COMPLETA
- JEU CABLES D'ALLUMAGE
- ZÜNDKABELSATZ
- JUEGO DE CABLES DE ENCENDIDO

4.7251
4.9278
4.9344
4.9401
4.9753
4.9764
4.9882
4.9883

MORRIS

A20

CONTACT SET
- COPPIA CONTATTI
- RUPTEUR
- KONTAKTSATZ
- PLATINOS

1.4683MHDV

A40

DISTRIBUTOR CAP
- CALOTTA
- TETE D'ALLUMEUR
- VERTEILERKAPPE
- TAPA DEL DISTRIBUIDOR

2.8075

A50

ROTOR
- DISTRIBUTORE
- DISRUPTEUR
- VERTEILERLÄUFER
- ROTOR DEL DISTRIBUIDOR

3.8106

NISSAN

A10

CONDENSER
- CONDENSATORE
- CONDENSATEUR
- KONDENSATOR
- CONDENSADOR

0.0675/31

A20

CONTACT SET
- COPPIA CONTATTI
- RUPTEUR
- KONTAKTSATZ
- PLATINOS

1.4456HDV
1.5085

A40

DISTRIBUTOR CAP
- CALOTTA
- TETE D'ALLUMEUR
- VERTEILERKAPPE
- TAPA DEL DISTRIBUIDOR

2.7903
2.7940
2.7946
2.7957
2.7963
2.7973
2.7979
2.7989
2.8101PHT
2.8102
2.8103
2.8104
2.8104, 2.8105
2.8105
2.8303/1
2.8322/14
2.8322/20
2.8322/26
2.8322/36
2.8322/51
2.8322/52
2.8322/55

PRODUCTS BY VEHICLE MANUFACTURER

-ELENCO PRODOTTI PER MARCA -PRODUITS PAR FABRICANT VEHICULE -LISTE DER PRODUKTE JE NACH FAHRZEUGMARKE -PRODUCTOS POR FABRICANTE DE VEHÍCULO

A50

ROTOR
- DISTRIBUTORE
- DISRUPTEUR
- VERTEILERLÄUFER
- ROTOR DEL DISTRIBUIDOR

3.7952
3.7966
3.7970
3.7970, 3.7986
3.7970, 3.8002
3.7985
3.7986
3.8002
3.8130
3.8323
3.8330
3.8331/10
3.8331/18
3.8331/31
3.8331/36

C10

COIL
- BOBINA
- BOBINE
- ZÜNDSPULE
- BOBINA

9.6196
9.6319
9.6332
9.6389
9.6418
9.6433
9.6451
9.6452
9.6457
9.6496
9.6502
9.6513

E01

IGNITION CABLE SET
- SERIE CAVI COMPLETA
- JEU CABLES D'ALLUMAGE
- ZÜNDKABELSATZ
- JUEGO DE CABLES DE ENCENDIDO

4.7230
4.7244
4.7246
4.8608
4.8609
4.9399
4.9411
4.9658
4.9789

NSU

A50

ROTOR
- DISTRIBUTORE
- DISRUPTEUR
- VERTEILERLÄUFER
- ROTOR DEL DISTRIBUIDOR

3.7521RS

OPEL

A10

CONDENSER
- CONDENSATORE
- CONDENSATEUR
- KONDENSATOR
- CONDENSADOR

0.0179/112

A20

CONTACT SET
- COPPIA CONTATTI
- RUPTEUR
- KONTAKTSATZ
- PLATINOS

1.2529HDV
1.2534HDVS
1.2549HDVS
1.3455HDVS

A40

DISTRIBUTOR CAP
- CALOTTA
- TETE D'ALLUMEUR
- VERTEILERKAPPE
- TAPA DEL DISTRIBUIDOR

2.7462
2.7476PHT
2.7480PHT
2.7481PHT
2.7499
2.7530/10PHT
2.7530/19PHT
2.7530/21PHT
2.7530/26PHT
2.7530/27PHT
2.7530/28PHT
2.7566PHT
2.7573PHT
2.7574PHT
2.7593
2.7630/24
2.7684PHT
2.7960
2.8099PHT
2.8100PHT

A50

ROTOR
- DISTRIBUTORE
- DISRUPTEUR
- VERTEILERLÄUFER
- ROTOR DEL DISTRIBUIDOR

3.7512RS

A50

3.7526RS
3.7555RS
3.7556RS
3.7561RS
3.7567RS
3.7573/21RS
3.7573/27RS
3.7593
3.7593RS
3.7595RS
3.7596
3.7597
3.7600
3.7630
3.7703RS
3.7969
3.8128RS

A70

PICK-UP
- IMPULSORE
- CAPTEUR
- IMPULSGEBER
- CAPTADOR

8.3410
8.3411
8.4702

C10

COIL
- BOBINA
- BOBINE
- ZÜNDSPULE
- BOBINA

9.6009
9.6011
9.6040
9.6091
9.6092
9.6094
9.6119
9.6172
9.6173
9.6241
9.6289
9.6298
9.6299
9.6300
9.6332
9.6342
9.6350
9.6375
9.6407
9.6408
9.6445
9.6447
9.6509
9.6520
9.6531

C20

IGNITION MODULE
- MODULO DI ACCENSIONE
- MODULES D'ALLUMAGE
- ZÜNDUNGSMODUL
- MÓDULO DE ENCENDIDO

9.4004
9.4005
9.4025
9.4034
9.4036

E01

IGNITION CABLE SET
- SERIE CAVI COMPLETA
- JEU CABLES D'ALLUMAGE
- ZÜNDKABELSATZ
- JUEGO DE CABLES DE ENCENDIDO

4.7195
4.7199
4.8509
4.8513
4.8514
4.8527
4.8634
4.8688
4.8689
4.8956
4.9237
4.9506
4.9506, 4.9562
4.9529
4.9531
4.9559
4.9562
4.9904
4.9942
4.9947

PEUGEOT

A10

CONDENSER
- CONDENSATORE
- CONDENSATEUR
- KONDENSATOR
- CONDENSADOR

0.0323
0.0334

A20

CONTACT SET
- COPPIA CONTATTI
- RUPTEUR
- KONTAKTSATZ
- PLATINOS

1.2540
1.2540, 1.3691/11U
1.3655
1.3676
1.3691/11U
1.3691/2
1.3691/3

A20

1.3691/5
1.4946M

A40

DISTRIBUTOR CAP
- CALOTTA
- TETE D'ALLUMEUR
- VERTEILERKAPPE
- TAPA DEL DISTRIBUIDOR

2.7479PHT
2.7524PHT
2.7530/11PHT
2.7530/22PHT
2.7649PHT
2.7654PHT
2.7658PHT
2.7659PHT
2.7667PHT
2.7674PHT
2.7677PHT
2.7678PHT
2.7679PHT
2.8198PHT
2.8201PHT

A50

ROTOR
- DISTRIBUTORE
- DISRUPTEUR
- VERTEILERLÄUFER
- ROTOR DEL DISTRIBUIDOR

3.7514RS
3.7525RS
3.7526RS
3.7549RS
3.7555RS
3.7556RS
3.7561RS
3.7573/19RS
3.7688
3.7691
3.7694
3.7702RS
3.7704
3.8247RS
3.8260

A70

PICK-UP
- IMPULSORE
- CAPTEUR
- IMPULSGEBER
- CAPTADOR

8.2653
8.2659
8.3617
8.3619
8.4978M

PRODUCTS BY VEHICLE MANUFACTURER

-ELENCO PRODOTTI PER MARCA -PRODUITS PAR FABRICANT VEHICULE -LISTE DER PRODUKTE JE NACH FAHRZEUGMARKE -PRODUCTOS POR FABRICANTE DE VEHÍCULO

C10

COIL
- BOBINA
- BOBINE
- ZÜNDSPULE
- BOBINA

9.6001D
9.6005
9.6005, 9.6055
9.6006
9.6055
9.6068
9.6088
9.6089
9.6303
9.6305
9.6307
9.6308
9.6359
9.6361
9.6375
9.6376
9.6383
9.6397
9.6405
9.6409
9.6509
9.6520

C20

IGNITION MODULE
- MODULO DI ACCENSIONE
- MODULES D'ALLUMAGE
- ZÜNDUNGSMODUL
- MÓDULO DE ENCENDIDO

9.4005
9.4034

E01

IGNITION CABLE SET
- SERIE CAVI COMPLETA
- JEU CABLES D'ALLUMAGE
- ZÜNDKABELSATZ
- JUEGO DE CABLES DE ENCENDIDO

4.8491
4.8494
4.8655
4.8674
4.8747
4.8748
4.8780
4.8846
4.9025
4.9374

PIAGGIO

A50

ROTOR
- DISTRIBUTORE
- DISRUPTEUR
- VERTEILERLÄUFER
- ROTOR DEL DISTRIBUIDOR

3.7630

PORSCHE

A20

CONTACT SET
- COPPIA CONTATTI
- RUPTEUR
- KONTAKTSATZ
- PLATINOS

1.2547
1.2562

A40

DISTRIBUTOR CAP
- CALOTTA
- TETE D'ALLUMEUR
- VERTEILERKAPPE
- TAPA DEL DISTRIBUIDOR

2.7472PHT
2.7476PHT
2.7479PHT
2.7490PHT
2.7517PHT
2.7523PHT
2.7528PHT

A50

ROTOR
- DISTRIBUTORE
- DISRUPTEUR
- VERTEILERLÄUFER
- ROTOR DEL DISTRIBUIDOR

3.7518RS, 3.7521RS
3.7521RS
3.7525RS
3.7570RS
3.7573/13RS

C10

COIL
- BOBINA
- BOBINE
- ZÜNDSPULE
- BOBINA

9.6327
9.6334
9.6536

C20

IGNITION MODULE
- MODULO DI ACCENSIONE
- MODULES D'ALLUMAGE
- ZÜNDUNGSMODUL
- MÓDULO DE ENCENDIDO

9.4034

PUCH

A20

CONTACT SET
- COPPIA CONTATTI
- RUPTEUR
- KONTAKTSATZ
- PLATINOS

1.2534HDVS

A40

DISTRIBUTOR CAP
- CALOTTA
- TETE D'ALLUMEUR
- VERTEILERKAPPE
- TAPA DEL DISTRIBUIDOR

2.7492PHT
2.7508PHT
2.7523PHT
2.7530/4PHT
2.7530/7PHT

A50

ROTOR
- DISTRIBUTORE
- DISRUPTEUR
- VERTEILERLÄUFER
- ROTOR DEL DISTRIBUIDOR

3.7524RS
3.7534RS
3.7555RS
3.7560RS
3.7573/21RS
3.7573/25RS

C10

COIL
- BOBINA
- BOBINE
- ZÜNDSPULE
- BOBINA

9.6078
9.6080
9.6216
9.6216K
9.6317

E01

IGNITION CABLE SET
- SERIE CAVI COMPLETA
- JEU CABLES D'ALLUMAGE
- ZÜNDKABELSATZ
- JUEGO DE CABLES DE ENCENDIDO

4.9654
4.9657

RELIANT

A40

DISTRIBUTOR CAP
- CALOTTA
- TETE D'ALLUMEUR
- VERTEILERKAPPE
- TAPA DEL DISTRIBUIDOR

2.8075

A50

ROTOR
- DISTRIBUTORE
- DISRUPTEUR
- VERTEILERLÄUFER
- ROTOR DEL DISTRIBUIDOR

3.8106

RENAULT

A10

CONDENSER
- CONDENSATORE
- CONDENSATEUR
- KONDENSATOR
- CONDENSADOR

0.0323
0.0334
0.0397
0.0856

A20

CONTACT SET
- COPPIA CONTATTI
- RUPTEUR
- KONTAKTSATZ
- PLATINOS

1.2540
1.3655
1.3661
1.3686
1.3691/26
1.3724
1.3726
1.4948M
1.6854

A40

DISTRIBUTOR CAP
- CALOTTA
- TETE D'ALLUMEUR
- VERTEILERKAPPE
- TAPA DEL DISTRIBUIDOR

2.7494PHT
2.7530/30PHT
2.7530/6PHT
2.7641
2.7654PHT
2.7659PHT
2.7662PHT
2.7663PHT
2.7665PHT
2.7666PHT
2.7669PHT
2.7670
2.7672PHT
2.7673PHT
2.7679PHT
2.7681PHT
2.7682PHT
2.7683PHT
2.7685PHT
2.7686PHT

A40

2.7688
2.7691
2.7723PHT
2.8198PHT
2.8201PHT
2.8211PHT
2.8543

A50

ROTOR
- DISTRIBUTORE
- DISRUPTEUR
- VERTEILERLÄUFER
- ROTOR DEL DISTRIBUIDOR

3.7512RS
3.7514RS
3.7523RS
3.7573/19RS
3.7573/47RS
3.7681
3.7688
3.7691
3.7694
3.7697
3.7701
3.7758
3.8247RS
3.8259

C10

COIL
- BOBINA
- BOBINE
- ZÜNDSPULE
- BOBINA

9.6001D
9.6007
9.6096
9.6128
9.6175
9.6176
9.6255
9.6256
9.6265
9.6276
9.6278
9.6319
9.6332
9.6389
9.6418
9.6433
9.6451
9.6452
9.6496
9.6513

C30

ELECTRONIC IGNITION KIT
- KIT ACCENSIONE ELETTRONICA
- KIT POUR ALLUMAGE ELECTRONIQUE
- ELEKTRONISCHE ZÜNDUNGSSATZ
- JUEGO DE ENCENDIDO ELECTRÓNICO

9.8123

PRODUCTS BY VEHICLE MANUFACTURER

-ELENCO PRODOTTI PER MARCA -PRODUITS PAR FABRICANT VEHICULE -LISTE DER PRODUKTE JE NACH FAHRZEUGMARKE -PRODUCTOS POR FABRICANTE DE VEHÍCULO

E01

IGNITION CABLE SET
- SERIE CAVI COMPLETA
- JEU CABLES D'ALLUMAGE
- ZÜNDKABELSATZ
- JUEGO DE CABLES DE ENCENDIDO

4.7049
4.7061
4.7064
4.7229
4.7230
4.7244
4.7246
4.7252
4.8415
4.8539
4.8543
4.8801
4.8802
4.8839
4.8920
4.9332
4.9443
4.9446
4.9447
4.9492
4.9497
4.9499
4.9501
4.9681

RILEY

A40

DISTRIBUTOR CAP
- CALOTTA
- TETE D'ALLUMEUR
- VERTEILERKAPPE
- TAPA DEL DISTRIBUIDOR

2.8075

A50

ROTOR
- DISTRIBUTORE
- DISRUPTEUR
- VERTEILERLÄUFER
- ROTOR DEL DISTRIBUIDOR

3.8106

ROLLS-ROYCE

C10

COIL
- BOBINA
- BOBINE
- ZÜNDSPULE
- BOBINA

9.6375

ROVER

A20

CONTACT SET
- COPPIA CONTATTI
- RUPTEUR
- KONTAKTSATZ
- PLATINOS

1.4683MHDV

A40

DISTRIBUTOR CAP
- CALOTTA
- TETE D'ALLUMEUR
- VERTEILERKAPPE
- TAPA DEL DISTRIBUIDOR

2.7922
2.7968
2.7969
2.7982
2.8075
2.8093PHT
2.8094PHT
2.8106

A50

ROTOR
- DISTRIBUTORE
- DISRUPTEUR
- VERTEILERLÄUFER
- ROTOR DEL DISTRIBUIDOR

3.7956
3.7982
3.7995
3.7998
3.8002
3.8106
3.8124RS
3.8125
3.8126RS
3.8129RS

C10

COIL
- BOBINA
- BOBINE
- ZÜNDSPULE
- BOBINA

9.6089
9.6111
9.6113
9.6114
9.6247
9.6274
9.6313

C20

IGNITION MODULE
- MODULO DI ACCENSIONE
- MODULES D'ALLUMAGE
- ZÜNDUNGSMODUL
- MÓDULO DE ENCENDIDO

9.4052

E01

IGNITION CABLE SET
- SERIE CAVI COMPLETA
- JEU CABLES D'ALLUMAGE
- ZÜNDKABELSATZ
- JUEGO DE CABLES DE ENCENDIDO

4.9711
4.9888
4.9889
4.9914

SAAB

A40

DISTRIBUTOR CAP
- CALOTTA
- TETE D'ALLUMEUR
- VERTEILERKAPPE
- TAPA DEL DISTRIBUIDOR

2.7479PHT
2.7524PHT

A50

ROTOR
- DISTRIBUTORE
- DISRUPTEUR
- VERTEILERLÄUFER
- ROTOR DEL DISTRIBUIDOR

3.7521RS
3.7526RS
3.7555RS
3.7573/21RS
3.7573/23RS

A70

PICK-UP
- IMPULSORE
- CAPTEUR
- IMPULSGEBER
- CAPTADOR

8.2693
8.2744

C10

COIL
- BOBINA
- BOBINE
- ZÜNDSPULE
- BOBINA

9.6092
9.6350
9.6408

C20

IGNITION MODULE
- MODULO DI ACCENSIONE
- MODULES D'ALLUMAGE
- ZÜNDUNGSMODUL
- MÓDULO DE ENCENDIDO

9.4004
9.4007
9.4034

E01

IGNITION CABLE SET
- SERIE CAVI COMPLETA
- JEU CABLES D'ALLUMAGE
- ZÜNDKABELSATZ
- JUEGO DE CABLES DE ENCENDIDO

4.9138
4.9140

SEAT

A10

CONDENSER
- CONDENSATORE
- CONDENSATEUR
- KONDENSATOR
- CONDENSADOR

0.0339
0.0617
0.0628

A20

CONTACT SET
- COPPIA CONTATTI
- RUPTEUR
- KONTAKTSATZ
- PLATINOS

1.3720
1.4932
1.4942
1.4946M

A40

DISTRIBUTOR CAP
- CALOTTA
- TETE D'ALLUMEUR
- VERTEILERKAPPE
- TAPA DEL DISTRIBUIDOR

2.7479PHT
2.7494PHT
2.7530/33PHT
2.7530/36PHT
2.7658PHT
2.7668PHT
2.7714
2.7716
2.7716, 2.7729
2.8176
2.8198PHT
2.8201PHT
2.8216PHT

A50

ROTOR
- DISTRIBUTORE
- DISRUPTEUR
- VERTEILERLÄUFER
- ROTOR DEL DISTRIBUIDOR

3.7555RS
3.7556RS
3.7573/21RS
3.7683RS
3.7691

A50

3.7699RS
3.7752
3.7752RS
3.8237
3.8242RS
3.8247RS
3.8254RS
3.8257RS

A70

PICK-UP
- IMPULSORE
- CAPTEUR
- IMPULSGEBER
- CAPTADOR

8.2659
8.2693
8.2723
8.2733
8.2734
8.4982

C10

COIL
- BOBINA
- BOBINE
- ZÜNDSPULE
- BOBINA

9.6001D
9.6025
9.6059
9.6096
9.6254S
9.6326
9.6329
9.6331
9.6334
9.6335
9.6345
9.6374
9.6499
9.6536

C20

IGNITION MODULE
- MODULO DI ACCENSIONE
- MODULES D'ALLUMAGE
- ZÜNDUNGSMODUL
- MÓDULO DE ENCENDIDO

9.4007
9.4074
9.4076

C30

ELECTRONIC IGNITION KIT
- KIT ACCENSIONE ELETTRONICA
- KIT POUR ALLUMAGE ELECTRONIQUE
- ELEKTRONISCHE ZÜNDUNGSSATZ
- JUEGO DE ENCENDIDO ELECTRÓNICO

9.8114
9.8116
9.8120

PRODUCTS BY VEHICLE MANUFACTURER

-ELENCO PRODOTTI PER MARCA -PRODUITS PAR FABRICANT VEHICULE -LISTE DER PRODUKTE JE NACH FAHRZEUGMARKE -PRODUCTOS POR FABRICANTE DE VEHÍCULO

E01

IGNITION CABLE SET
- SERIE CAVI COMPLETA
- JEU CABLES D'ALLUMAGE
- ZÜNDKABELSATZ
- JUEGO DE CABLES DE ENCENDIDO

4.7248
4.8612
4.8725
4.8736
4.8965
4.9364
4.9484
4.9489
4.9549
4.9569
4.9575
4.9585
4.9595
4.9601
4.9640
4.9641
4.9660
4.9667
4.9723
4.9932
4.9937

SKODA

A20

CONTACT SET
- COPPIA CONTATTI
- RUPTEUR
- KONTAKTSATZ
- PLATINOS

1.5945

A40

DISTRIBUTOR CAP
- CALOTTA
- TETE D'ALLUMEUR
- VERTEILERKAPPE
- TAPA DEL DISTRIBUIDOR

2.7494PHT
2.8216PHT
2.8342
2.8343

A50

ROTOR
- DISTRIBUTORE
- DISRUPTEUR
- VERTEILERLÄUFER
- ROTOR DEL DISTRIBUIDOR

3.7573/21RS
3.8257RS
3.8362RS
3.8362RS, 3.8363RS
3.8363RS

A70

PICK-UP
- IMPULSORE
- CAPTEUR
- IMPULSGEBER
- CAPTADOR

8.2723

C10

COIL
- BOBINA
- BOBINE
- ZÜNDSPULE
- BOBINA

9.6254S
9.6326
9.6329
9.6331
9.6345
9.6374
9.6499
9.6536

C20

IGNITION MODULE
- MODULO DI ACCENSIONE
- MODULES D'ALLUMAGE
- ZÜNDUNGSMODUL
- MÓDULO DE ENCENDIDO

9.4076

C30

ELECTRONIC IGNITION KIT
- KIT ACCENSIONE ELETTRONICA
- KIT POUR ALLUMAGE ELECTRONIQUE
- ELEKTRONISCHE ZÜNDUNGSSATZ
- JUEGO DE ENCENDIDO ELECTRÓNICO

9.8114
9.8120

E01

IGNITION CABLE SET
- SERIE CAVI COMPLETA
- JEU CABLES D'ALLUMAGE
- ZÜNDKABELSATZ
- JUEGO DE CABLES DE ENCENDIDO

4.7223
4.7248
4.9373
4.9479
4.9484
4.9489
4.9569
4.9575
4.9585
4.9609

SMART

C10

COIL
- BOBINA
- BOBINE
- ZÜNDSPULE
- BOBINA

9.6314
9.6403
9.6513

E01

IGNITION CABLE SET
- SERIE CAVI COMPLETA
- JEU CABLES D'ALLUMAGE
- ZÜNDKABELSATZ
- JUEGO DE CABLES DE ENCENDIDO

4.9643

SSANGYONG

C10

COIL
- BOBINA
- BOBINE
- ZÜNDSPULE
- BOBINA

9.6216

SUBARU

A40

DISTRIBUTOR CAP
- CALOTTA
- TETE D'ALLUMEUR
- VERTEILERKAPPE
- TAPA DEL DISTRIBUIDOR

2.7623
2.7630/29
2.7941
2.7946
2.7948
2.7975
2.8322/45

A50

ROTOR
- DISTRIBUTORE
- DISRUPTEUR
- VERTEILERLÄUFER
- ROTOR DEL DISTRIBUIDOR

3.7614
3.7628
3.7629
3.7973
3.7993
3.8331/19

C10

COIL
- BOBINA
- BOBINE
- ZÜNDSPULE
- BOBINA

9.6165
9.6166
9.6437
9.6470

E01

IGNITION CABLE SET
- SERIE CAVI COMPLETA
- JEU CABLES D'ALLUMAGE
- ZÜNDKABELSATZ
- JUEGO DE CABLES DE ENCENDIDO

4.7100
4.7106
4.9813
4.9817
4.9819
4.9835
4.9887

SUZUKI

A20

CONTACT SET
- COPPIA CONTATTI
- RUPTEUR
- KONTAKTSATZ
- PLATINOS

1.3511HDV

A40

DISTRIBUTOR CAP
- CALOTTA
- TETE D'ALLUMEUR
- VERTEILERKAPPE
- TAPA DEL DISTRIBUIDOR

2.7593
2.7607
2.7623
2.7630/15
2.7630/26
2.7946
2.8322/32
2.8322/40
2.8322/44

A50

ROTOR
- DISTRIBUTORE
- DISRUPTEUR
- VERTEILERLÄUFER
- ROTOR DEL DISTRIBUIDOR

3.7614
3.7628
3.7630
3.7634
3.7636
3.7973

A50

3.8331/31
3.8331/36
3.8331/8

C10

COIL
- BOBINA
- BOBINE
- ZÜNDSPULE
- BOBINA

9.6101
9.6435
9.6470
9.6491
9.6521

E01

IGNITION CABLE SET
- SERIE CAVI COMPLETA
- JEU CABLES D'ALLUMAGE
- ZÜNDKABELSATZ
- JUEGO DE CABLES DE ENCENDIDO

4.7004
4.7005
4.7013
4.7020
4.7028
4.7231
4.9413
4.9415, 4.9417
4.9434

TALBOT

A10

CONDENSER
- CONDENSATORE
- CONDENSATEUR
- KONDENSATOR
- CONDENSADOR

0.0334

A20

CONTACT SET
- COPPIA CONTATTI
- RUPTEUR
- KONTAKTSATZ
- PLATINOS

1.3691/11U
1.3691/3

A40

DISTRIBUTOR CAP
- CALOTTA
- TETE D'ALLUMEUR
- VERTEILERKAPPE
- TAPA DEL DISTRIBUIDOR

2.7479PHT
2.7654PHT
2.7658PHT
2.8075

PRODUCTS BY VEHICLE MANUFACTURER

-ELENCO PRODOTTI PER MARCA -PRODUITS PAR FABRICANT VEHICULE -LISTE DER PRODUKTE JE NACH FAHRZEUGMARKE -PRODUCTOS POR FABRICANTE DE VEHÍCULO

A50

ROTOR
- DISTRIBUTORE
- DISRUPTEUR
- VERTEILERLÄUFER
- ROTOR DEL DISTRIBUIDOR

3.7525RS
3.7549RS
3.7561RS
3.7590, 3.8106
3.7688
3.7691
3.7694

A70

PICK-UP
- IMPULSORE
- CAPTEUR
- IMPULSGEBER
- CAPTADOR

8.2653

C10

COIL
- BOBINA
- BOBINE
- ZÜNDSPULE
- BOBINA

9.6001D

TOYOTA

A40

DISTRIBUTOR CAP
- CALOTTA
- TETE D'ALLUMEUR
- VERTEILERKAPPE
- TAPA DEL DISTRIBUIDOR

2.7494PHT
2.7599
2.7613
2.7613, 2.7614
2.7614
2.7619
2.7622
2.7622, 2.7630/48
2.7630/10
2.7630/18
2.7630/21
2.7630/22
2.7630/32
2.7630/35
2.7630/37
2.7630/42
2.7630/43
2.7630/45
2.7630/48

A50

ROTOR
- DISTRIBUTORE
- DISRUPTEUR
- VERTEILERLÄUFER
- ROTOR DEL DISTRIBUIDOR

3.7514RS
3.7573/21RS
3.7614
3.7627
3.7629
3.7629, 3.7636
3.7630
3.7636

C10

COIL
- BOBINA
- BOBINE
- ZÜNDSPULE
- BOBINA

9.6097
9.6098
9.6098, 9.6099
9.6098, 9.6185S
9.6099
9.6099, 9.6185S
9.6102
9.6103
9.6185S
9.6222
9.6358
9.6358, 9.6366
9.6359
9.6361
9.6366
9.6436
9.6437
9.6438
9.6509
9.6532
9.6545

E01

IGNITION CABLE SET
- SERIE CAVI COMPLETA
- JEU CABLES D'ALLUMAGE
- ZÜNDKABELSATZ
- JUEGO DE CABLES DE ENCENDIDO

4.9209
4.9209, 4.9879
4.9393
4.9435
4.9792
4.9793
4.9823
4.9856
4.9879
4.9880

TRIUMPH

A20

CONTACT SET
- COPPIA CONTATTI
- RUPTEUR
- KONTAKTSATZ
- PLATINOS

1.4683MHDV

A40

DISTRIBUTOR CAP
- CALOTTA
- TETE D'ALLUMEUR
- VERTEILERKAPPE
- TAPA DEL DISTRIBUIDOR

2.8075

A50

ROTOR
- DISTRIBUTORE
- DISRUPTEUR
- VERTEILERLÄUFER
- ROTOR DEL DISTRIBUIDOR

3.7590
3.7590, 3.8107
3.8106
3.8107

TVR

A50

ROTOR
- DISTRIBUTORE
- DISRUPTEUR
- VERTEILERLÄUFER
- ROTOR DEL DISTRIBUIDOR

3.8106
3.8107

VAUXHALL

A40

DISTRIBUTOR CAP
- CALOTTA
- TETE D'ALLUMEUR
- VERTEILERKAPPE
- TAPA DEL DISTRIBUIDOR

2.7530/10PHT
2.7530/19PHT
2.7530/21PHT
2.7530/26PHT
2.7530/27PHT
2.7573PHT
2.7684PHT
2.8100PHT

A50

ROTOR
- DISTRIBUTORE
- DISRUPTEUR
- VERTEILERLÄUFER
- ROTOR DEL DISTRIBUIDOR

3.7556RS
3.7573/21RS
3.7573/27RS
3.7590
3.7600
3.7703RS
3.8128RS

A70

PICK-UP
- IMPULSORE
- CAPTEUR
- IMPULSGEBER
- CAPTADOR

8.3410
8.4702

C10

COIL
- BOBINA
- BOBINE
- ZÜNDSPULE
- BOBINA

9.6040
9.6091
9.6092
9.6094
9.6172
9.6173
9.6241
9.6289
9.6298
9.6299
9.6300
9.6332
9.6342
9.6350
9.6375
9.6407
9.6408
9.6445
9.6447
9.6509
9.6520
9.6531

C20

IGNITION MODULE
- MODULO DI ACCENSIONE
- MODULES D'ALLUMAGE
- ZÜNDUNGSMODUL
- MÓDULO DE ENCENDIDO

9.4005
9.4025
9.4036

E01

IGNITION CABLE SET
- SERIE CAVI COMPLETA
- JEU CABLES D'ALLUMAGE
- ZÜNDKABELSATZ
- JUEGO DE CABLES DE ENCENDIDO

4.7195
4.7199

E01

4.8514
4.8527
4.8634
4.8688
4.8689
4.9237
4.9506
4.9506, 4.9562
4.9529
4.9531
4.9559
4.9562
4.9904
4.9947

VOLKSWAGEN (BR)

A40

DISTRIBUTOR CAP
- CALOTTA
- TETE D'ALLUMEUR
- VERTEILERKAPPE
- TAPA DEL DISTRIBUIDOR

2.7494PHT

A50

ROTOR
- DISTRIBUTORE
- DISRUPTEUR
- VERTEILERLÄUFER
- ROTOR DEL DISTRIBUIDOR

3.7555RS
3.7573/21RS

A70

PICK-UP
- IMPULSORE
- CAPTEUR
- IMPULSGEBER
- CAPTADOR

8.2660
8.2733

C10

COIL
- BOBINA
- BOBINE
- ZÜNDSPULE
- BOBINA

9.6068
9.6254
9.6254S
9.6374

C30

ELECTRONIC IGNITION KIT
- KIT ACCENSIONE ELETTRONICA
- KIT POUR ALLUMAGE ELECTRONIQUE
- ELEKTRONISCHE ZÜNDUNGSSATZ
- JUEGO DE ENCENDIDO ELECTRÓNICO

9.8114

PRODUCTS BY VEHICLE MANUFACTURER

-ELENCO PRODOTTI PER MARCA -PRODUITS PAR FABRICANT VEHICULE -LISTE DER PRODUKTE JE NACH FAHRZEUGMARKE -PRODUCTOS POR FABRICANTE DE VEHÍCULO

C30
9.8120

E01
IGNITION CABLE SET
- SERIE CAVI COMPLETA
- JEU CABLES D'ALLUMAGE
- ZÜNDKABELSATZ
- JUEGO DE CABLES DE ENCENDIDO

4.9484
4.9585
4.9723

VOLVO

A20
CONTACT SET
- COPPIA CONTATTI
- RUPTEUR
- KONTAKTSATZ
- PLATINOS

1.2521
1.2521, 1.2547
1.2534HDVS
1.2547
1.2549HDVS

A40
DISTRIBUTOR CAP
- CALOTTA
- TETE D'ALLUMEUR
- VERTEILERKAPPE
- TAPA DEL DISTRIBUIDOR

2.7462
2.7476PHT
2.7479PHT
2.7527PHT
2.7530/30PHT
2.7530/6PHT
2.7659PHT
2.7662PHT
2.7663PHT
2.7669PHT
2.7671PHT

A50
ROTOR
- DISTRIBUTORE
- DISRUPTEUR
- VERTEILERLÄUFER
- ROTOR DEL DISTRIBUIDOR

3.7523RS
3.7525RS
3.7555RS
3.7567RS
3.7573/18RS
3.7573/19RS
3.7573/21RS
3.7573/22RS
3.7573/47RS
3.7593RS
3.7696RS

A50
3.7697

A70
PICK-UP
- IMPULSORE
- CAPTEUR
- IMPULSGEBER
- CAPTADOR

8.2653
8.2722

C10
COIL
- BOBINA
- BOBINE
- ZÜNDSPULE
- BOBINA

9.6007
9.6255
9.6256
9.6348
9.6378
9.6380
9.6381
9.6432

C30
ELECTRONIC IGNITION KIT
- KIT ACCENSIONE ELETTRONICA
- KIT POUR ALLUMAGE ELECTRONIQUE
- ELEKTRONISCHE ZÜNDUNGSSATZ
- JUEGO DE ENCENDIDO ELECTRÓNICO

9.8123

E01
IGNITION CABLE SET
- SERIE CAVI COMPLETA
- JEU CABLES D'ALLUMAGE
- ZÜNDKABELSATZ
- JUEGO DE CABLES DE ENCENDIDO

4.7059
4.7061
4.7064
4.7242
4.8372
4.8415
4.8417
4.9332

VW

A10
CONDENSER
- CONDENSATORE
- CONDENSATEUR
- KONDENSATOR
- CONDENSADOR

0.0179/95
0.0179/95, 0.0179/96
0.0179/96

A20
CONTACT SET
- COPPIA CONTATTI
- RUPTEUR
- KONTAKTSATZ
- PLATINOS

1.2532HDV
1.2532HDV, 1.2540
1.2534HDVS
1.2540
1.2549HDVS
1.3511HDV

A40
DISTRIBUTOR CAP
- CALOTTA
- TETE D'ALLUMEUR
- VERTEILERKAPPE
- TAPA DEL DISTRIBUIDOR

2.7462
2.7479PHT
2.7493PHT
2.7494PHT
2.7530/1PHT
2.7530/33PHT
2.7530/36PHT
2.7530/3PHT
2.7599
2.7613
2.7614
2.7630/43
2.7668PHT
2.8216PHT

A50
ROTOR
- DISTRIBUTORE
- DISRUPTEUR
- VERTEILERLÄUFER
- ROTOR DEL DISTRIBUIDOR

3.7514RS
3.7514RS, 3.7521RS
3.7518RS
3.7521RS
3.7525RS
3.7526RS
3.7527RS
3.7555RS
3.7555RS,
3.7573/16RS
3.7556RS
3.7559RS
3.7567RS
3.7573/14RS
3.7573/16RS
3.7573/17RS
3.7573/21RS
3.7573/48RS
3.7573/49RS
3.7614
3.7627
3.7689RS
3.7699RS
3.8257RS

A70
PICK-UP
- IMPULSORE
- CAPTEUR
- IMPULSGEBER
- CAPTADOR

8.2659
8.2693
8.2719
8.2723
8.2731
8.2733
8.2734
8.4982

C10
COIL
- BOBINA
- BOBINE
- ZÜNDSPULE
- BOBINA

9.6025
9.6025, 9.6026
9.6026
9.6032
9.6059
9.6103
9.6169
9.6216
9.6254
9.6254S
9.6325
9.6326
9.6327
9.6329
9.6331
9.6334
9.6335
9.6337
9.6345
9.6374
9.6499
9.6536

C20
IGNITION MODULE
- MODULO DI ACCENSIONE
- MODULES D'ALLUMAGE
- ZÜNDUNGSMODUL
- MÓDULO DE ENCENDIDO

9.4004
9.4007
9.4072
9.4074
9.4076

C30
ELECTRONIC IGNITION KIT
- KIT ACCENSIONE ELETTRONICA
- KIT POUR ALLUMAGE ELECTRONIQUE
- ELEKTRONISCHE ZÜNDUNGSSATZ
- JUEGO DE ENCENDIDO ELECTRÓNICO

9.8114
9.8116
9.8120

E01
IGNITION CABLE SET
- SERIE CAVI COMPLETA
- JEU CABLES D'ALLUMAGE
- ZÜNDKABELSATZ
- JUEGO DE CABLES DE ENCENDIDO

4.7159
4.7223
4.7248
4.8493
4.8725
4.8727
4.8736
4.8737
4.8965
4.9353
4.9364
4.9479
4.9484
4.9489
4.9491
4.9518
4.9549
4.9551
4.9575
4.9580
4.9585
4.9595
4.9601
4.9609
4.9640
4.9641
4.9660
4.9667
4.9671
4.9723
4.9932
4.9933
4.9937

WOLSELEY

A20
CONTACT SET
- COPPIA CONTATTI
- RUPTEUR
- KONTAKTSATZ
- PLATINOS

1.4683MHDV

A40
DISTRIBUTOR CAP
- CALOTTA
- TETE D'ALLUMEUR
- VERTEILERKAPPE
- TAPA DEL DISTRIBUIDOR

2.8075

PRODUCTS BY VEHICLE MANUFACTURER

-ELENCO PRODOTTI PER MARCA -PRODUITS PAR FABRICANT VEHICULE -LISTE DER PRODUKTE JE NACH FAHRZEUGMARKE -PRODUCTOS POR FABRICANTE DE VEHÍCULO

A50

ROTOR
- DISTRIBUTORE
- DISRUPTEUR
- VERTEILERLÄUFER
- ROTOR DEL DISTRIBUIDOR

3.8106
3.8107

YUGO

A20

CONTACT SET
- COPPIA CONTATTI
- RUPTEUR
- KONTAKTSATZ
- PLATINOS

1.2529HDV

ZASTAVA

A20

CONTACT SET
- COPPIA CONTATTI
- RUPTEUR
- KONTAKTSATZ
- PLATINOS

1.2805/1
1.4940

A40

DISTRIBUTOR CAP
- CALOTTA
- TETE D'ALLUMEUR
- VERTEILERKAPPE
- TAPA DEL DISTRIBUIDOR

2.7535/1PHT
2.8181

A50

ROTOR
- DISTRIBUTORE
- DISRUPTEUR
- VERTEILERLÄUFER
- ROTOR DEL DISTRIBUIDOR

3.7575/1RS
3.8236RS

C10

COIL
- BOBINA
- BOBINE
- ZÜNDSPULE
- BOBINA

9.6001D

APPLICATION LIST GLOSSARY

FA-IGN22Q1

•GLOSSARIO GUIDA APPLICAZIONI •GLOSSAIRE LISTE D'APPLICATIONS •GLOSSAR DER VERWENDUNGSLISTE •GLOSARIO LISTA APLICACIONES

#	ENGLISH	ITALIANO	FRANÇAIS	DEUTSCH	ESPAÑOL
->ch.: xxx	Vehicle Identification Number to: xxx	N° telaio fino a: xxx	Nº de châssis jusqu'à: xxx	Fahrgestellnummer bis: xxx	nº de chasis hasta: xxx
->eng.: xxx	Engine Number to: xxx	N° motore fino a: xxx	N° de moteur à: xxx	Motornummer bis: xxx	nº de motor hasta: xxx
->prod. nr.: xxx	Production number to: xxx	N° produzione fino a: xxx	Nº de production jusqu'à: xxx	Produktionsnummer bis: xxx	nº de producción hasta: xxx
->VET.: xxx	VET Number to: xxx	N° VET fino a: xxx	Numéro VET jusqu'à: xxx	VET-Nummer bis: xxx	nº VET hasta: xxx
->year: xxx	Construction year to: xxx	Anno fino a: xxx	Année jusqu'à: xxx	Baujahr bis: xxx	año construcción hasta: xxx
3 Speed	Number of Gears: 3 Speed	N° marce: 3 marce	Nombre de vitesses: 3 vitesses	Ganganzahl: 3-Gang	Número de marchas: 3 velocidades
4 Speed	Number of Gears: 4 Speed	N° marce: 4 marce	Nombre de vitesses: 4 vitesses	Ganganzahl: 4-Gang	Número de marchas: 4 velocidades
5 Speed	Number of Gears: 5 Speed	N° marce: 5 marce	Nombre de vitesses: 5 vitesses	Ganganzahl: 5-Gang	Número de marchas: 5 velocidades
6 Speed	Number of Gears: 6 Speed	N° marce: 6 marce	Nombre de vitesses: 6 vitesses	Ganganzahl: 6-Gang	Número de marchas: 6 velocidades
96 EEC	Emission Standard: 96 EEC	Norma sui gas di scarico: 96 EEC	Norme concernant les gaz d'échappement: 96 EEC	Abgasnorm: 96 EEC	Norma de emisiones: 96 EEC
Black	Housing Colour: xxx	Colore alloggiamento: xxx	Couleur du carter: xxx	Gehäusefarbe: xxx	Color de carcasa: xxx
Blue	Housing Colour: xxx	Colore alloggiamento: xxx	Couleur du carter: xxx	Gehäusefarbe: xxx	Color de carcasa: xxx
Brown	Housing Colour: xxx	Colore alloggiamento: xxx	Couleur du carter: xxx	Gehäusefarbe: xxx	Color de carcasa: xxx
ch.: xxx	Vehicle Identification Number: xxx	N° telaio: xxx	Nº de châssis: xxx	Fahrgestellnummer: xxx	Nº de chasis: xxx
ch.: xxx->	Vehicle Identification Number from: xxx	N° telaio da: xxx	Nº de châssis à partir de: xxx	Fahrgestellnummer ab: xxx	nº de chasis desde: xxx
Chrome / Black	Housing Colour: xxx	Colore alloggiamento: xxx	Couleur du carter: xxx	Gehäusefarbe: xxx	Color de carcasa: xxx
COL: xxx	Colour: xxx	Colore: xxx	Couleur: xxx	Farbe: xxx	Color: xxx
cyl. num.: xxx	Number of Cylinders: xxx	N° cilindri: xxx	Nombre de cylindres: xxx	Zylinderanzahl: xxx	Número de cilindros: xxx
Dia: xxxmm	Diameter [mm]: xxx	Diametro [mm]: xxx	Diamètre [mm]: xxx	Durchmesser [mm]: xxx	Diámetro [mm]: xxx
distr. num.: xxx	Distributor Number: xxx	N° distributore accensione: xxx	Numéro de distributeur: xxx	Zündverteilernummer: xxx	Número de distribuidor de encendido: xxx
DOHC	Camshaft: DOHC	Albero a camme: DOHC	Arbre à cames: DOHC	Nockenwelle: DOHC	Árbol de levas: DOHC
electronic carburettor	Fuel Mixture Formation: Electronic Carburettor	Preparazione carburante: Carburatore elettronico	Préparation de carburant: Carburateur électronique	Kraftstoffaufbereitung: Elektronischer Vergaser	Preparación del combustible: Carburador electrónico
eng. type: xxx->	Engine Number from: xxx	N° motore da: xxx	N° de moteur de: xxx	Motornummer ab: xxx	nº de motor desde: xxx
eng.: xxx	Engine Code: xxx	Codice motore: xxx	Code moteur: xxx	Motorcode: xxx	Código de motor: xxx
-eng.: xxx	not for engine code: xxx	non per codice motore: xxx	pas pour code moteur: xxx	nicht für Motorcode: xxx	no para código de motor: xxx
euro 1	Emission Standard: Euro 1	Norma sui gas di scarico: Euro 1	Norme concernant les gaz d'échappement: Euro 1	Abgasnorm: Euro 1	Norma de emisiones: Euro 1
euro 2	Emission Standard: Euro 2	Norma sui gas di scarico: Euro 2	Norme concernant les gaz d'échappement: Euro 2	Abgasnorm: Euro 2	Norma de emisiones: Euro 2
euro 3	Emission Standard: Euro 3	Norma sui gas di scarico: Euro 3	Norme concernant les gaz d'échappement: Euro 3	Abgasnorm: Euro 3	Norma de emisiones: Euro 3
euro 3 (D3)	Emission Standard: Euro 3 (D3)	Norma sui gas di scarico: Euro 3 (D3)	Norme concernant les gaz d'échappement: Euro 3 (D3)	Abgasnorm: Euro 3 (D3)	Norma de emisiones: Euro 3
euro 4 (D4)	Emission Standard: Euro 4 (D4)	Norma sui gas di scarico: Euro 4 (D4)	Norme concernant les gaz d'échappement: Euro 4 (D4)	Abgasnorm: Euro 4 (D4)	Norma de emisiones: Euro 4
euro 5	Emission Standard: Euro 5	Norma sui gas di scarico: Euro 5	Norme concernant les gaz d'échappement: Euro 5	Abgasnorm: Euro 5	Norma de emisiones: Euro 5
euro 6	Emission Standard: Euro 6	Norma sui gas di scarico: Euro 6	Norme concernant les gaz d'échappement: Euro 6	Abgasnorm: Euro 6	Norma de emisiones: Euro 6
euro1/euro2	Emission Standard: Euro1/ Euro2	Norma sui gas di scarico: Euro1/Euro2	Norme concernant les gaz d'échappement: Euro1/Euro2	Abgasnorm: Euro1/Euro2	Norma de emisiones: Euro1/Euro2
euro2/euro3	Emission Standard: Euro2/ Euro3	Norma sui gas di scarico: Euro2/Euro3	Norme concernant les gaz d'échappement: Euro2/Euro3	Abgasnorm: Euro2/Euro3	Norma de emisiones: Euro2/Euro3
euro3/euro4	Emission Standard: Euro3/ Euro4	Norma sui gas di scarico: Euro3/Euro4	Norme concernant les gaz d'échappement: Euro3/Euro4	Abgasnorm: Euro3/Euro4	Norma de emisiones: Euro3/Euro4
euro4/euro5	Emission Standard: Euro4/ Euro5	Norma sui gas di scarico: Euro4/Euro5	Norme concernant les gaz d'échappement: euro4 euro5	Abgasnorm: Euro4/Euro5	Norma de emisiones: Euro 4/Euro 5

APPLICATION LIST GLOSSARY

FA-IGN22Q1

•GLOSSARIO GUIDA APPLICAZIONI •GLOSSAIRE LISTE D'APPLICATIONS •GLOSSAR DER VERWENDUNGSLISTE •GLOSARIO LISTA APLICACIONES

#	ENGLISH	ITALIANO	FRANÇAIS	DEUTSCH	ESPAÑOL
euro5/euro6	Emission Standard: Euro5/ Euro6	Norma sui gas di scarico: Euro5/Euro6	Norme concernant les gaz d'échappement: Euro5/Euro6	Abgasnorm: Euro5/Euro6	Norma de emisiones: Euro5/Euro6
ext. thread: xxxmm	External Thread [mm]: xxx	Filetto esterno [mm]: xxx	Filetage extérieur [mm]: xxx	Außengewinde [mm]: xxx	Rosca exterior [mm]: xxx
for 1st gear	Number of Gears: for 1st gear	N° marce: per 1ª marcia	Nombre de vitesses: pour 1re vitesse	Ganganzahl: für 1. Gang	Número de marchas: para primera marcha
for emission-controlled vehicles	for emission-controlled vehicles: xxx	per veicoli sveleniti gas scarico: xxx	pour véhicules à emissions de gaz limitées: xxx	für abgasentgiftete Fahrzeuge: xxx	para vehículos con decontaminación de gases: xxx
for individual equip-ment ID: xxx	for individual equipment ID: xxx	per ID-equipaggiamento individuale: xxx	pour ID d'équipement individuel: xxx	für Individualausstattungs-ID: xxx	para ID equiüpamiento individual: xxx
for manuf. exhaust norm: xxx	for manufacturer exhaust norm: xxx	per norma sui gas di scarico-Costruttore: xxx	pour norme des gaz d'échappementdes fabricants: xxx	für Hersteller-Abgasnorm: xxx	para norma de emisión/ fabricante: xxx
FOR MODEL: xxx	for model year: xxx	per anno d. modello: xxx	pour année: xxx	für Modelljahr: xxx	para modelo (año): xxx
FOR: xxx	Country-spec. model: xxx	Modello p. paesi: xxx	Type de pays: xxx	Länderausführung: xxx	Modelo por país: xxx
FP: after soot particu-late filter	Fitting Position: after soot particulate filter	Lato montaggio: dopo il/ al Filtro antiparticolato	Côté d'assemblage: après filtre à particules	Einbauseite: nach Rußpartikelfilter	Lado de montaje: con filtro de partículas
FP: Air Filter Housing	Fitting Position: Air Filter Housing	Lato montaggio: Carter filtro aria	Côté d'assemblage: Boîtier de filtre à air	Einbauseite: Luftfiltergehäuse	Lado de montaje: Caja filtro de aire
FP: before soot particu-late filter	Fitting Position: before soot particulate filter	Lato montaggio: davanti al filtro antiparticolato	Côté d'assemblage: devant le filtre à particules	Einbauseite: vor Rußpartikelfilter	Lado de montaje: antes de filtro de partículos
FP: Behind exhaust turbo charger	Fitting Position: Behind exhaust turbo charger	Lato montaggio: a valle del turbocompressore	Côté d'assemblage: derrière turbocompresseur	Einbauseite: nach Abgasturbolader	Lado de montaje: al turbocompresor de gases de escape
FP: Boot	Fitting Position: Boot	Lato montaggio: Bagagliaio	Côté d'assemblage: Coffre à bagages	Einbauseite: Kofferraum	Lado de montaje: Maletero
FP: Brake Booster	Fitting Position: Brake Booster	Lato montaggio: Servofreno	Côté d'assemblage: Servofrein	Einbauseite: Bremskraftverstärker	Lado de montaje: Servofrenos
FP: Centre	Fitting Position: Centre	Lato montaggio: centro	Côté d'assemblage: centre	Einbauseite: mitte	Lado de montaje: centro
FP: Compressor Side	Fitting Position: Compressor Side	Lato montaggio: Lato compressore	Côté d'assemblage: Côté compresseur	Einbauseite: Verdichterseite	Lado de montaje: compresor
FP: Cylinder Head	Fitting Position: Cylinder Head	Lato montaggio: Testa a cilindro	Côté d'assemblage: Culasse de cylindre	Einbauseite: Zylinderkopf	Lado de montaje: Cabeza cilíndrica
FP: Elbow at exhaust manifold	Fitting Position: Elbow at exhaust manifold	Lato montaggio: Curva al collettore per scarico	Côté d'assemblage: Tube coudé au collecteur d'échappement	Einbauseite: Rohrkrümmer an Abgaskrümmer	Lado de montaje: codo en colector de escape
FP: End Silencer	Fitting Position: End Silencer	Lato montaggio: Silenziatore posteriore	Côté d'assemblage: Silencieux arrière	Einbauseite: Endschalldämpfer	Lado de montaje: Silenciador posterior
FP: Engine Side	Fitting Position: Engine Side	Lato montaggio: Lato motore	Côté d'assemblage: du côté moteur	Einbauseite: motorseitig	Lado de montaje: motor
FP: Exhaust Manifold	Fitting Position: Exhaust Manifold	Lato montaggio: Collettore gas scarico	Côté d'assemblage: Collecteur des gaz d'échappement	Einbauseite: Abgaskrümmer	Lado de montaje: Colector de escape
FP: Exhaust Pipe at exh. Turbocharger	Fitting Position: Exhaust Pipe at exhaust turbocharger	Lato montaggio: Condotto gas scarico a Turbocompressore a gas scarico	Côté d'assemblage: Tuyau d'échappement au turbocompresseur	Einbauseite: Abgasrohr an Abgasturbolader	Lado de montaje: Colector de escape en turbocompresor
FP: Exhaust Pipe on silencer	Fitting Position: Exhaust Pipe on silencer	Lato montaggio: Tubo gas scarico alla marmitta	Côté d'assemblage: Tuyau d'échappement au silencieux	Einbauseite: Abgasrohr an Schalldämpfer	Lado de montaje: Tubo de escape en silenciador
FP: Fan side	Fitting Position: Fan side	Lato montaggio: lato ventola	Côté d'assemblage: du côté du ventilateur	Einbauseite: lüfterseitig	Lado de montaje: del lado del ventilador
FP: Flywheel side	Fitting Position: Flywheel side	Lato montaggio: lato disco del volano	Côté d'assemblage: du côté du volant moteur	Einbauseite: schwungscheibenseitig	Lado de montaje: del lado del volante
FP: Front	Fitting Position: Front	Lato montaggio: anteriore	Côté d'assemblage: avant	Einbauseite: vorne	Lado de montaje: delante
FP: Front and Rear	Fitting Position: Front and Rear	Lato montaggio: anteriore e posteriore	Côté d'assemblage: avant et arrière	Einbauseite: vorne und hinten	Lado de montaje: delante y detrás
FP: Front Axle Left	Fitting Position: Front Axle Left	Lato montaggio: Assale anteriore Sx	Côté d'assemblage: Essieu avant gauche	Einbauseite: Vorderachse links	Lado de montaje: Eje delantero, izquierda
FP: Front Axle left and right	Fitting Position: Front Axle left and right	Lato montaggio: Assale anteriore bilaterale	Côté d'assemblage: des deux côtés de l'essieu avant	Einbauseite: Vorderachse beidseitig	Lado de montaje: eje delantero, ambos lados
FP: Front Axle Right	Fitting Position: Front Axle Right	Lato montaggio: Assale anteriore Dx	Côté d'assemblage: Essieu avant droit	Einbauseite: Vorderachse rechts	Lado de montaje: Eje delantero, derecha
FP: Fuel Line	Fitting Position: Fuel Line	Lato montaggio: Condotto carburante	Côté d'assemblage: Tube d'alimentation	Einbauseite: Kraftstoffleitung	Lado de montaje: Tubería de combustible

marketing@facet.it

APPLICATION LIST GLOSSARY

•GLOSSARIO GUIDA APPLICAZIONI •GLOSSAIRE LISTE D'APPLICATIONS •GLOSSAR DER VERWENDUNGSLISTE •GLOSARIO LISTA APLICACIONES

#	ENGLISH	ITALIANO	FRANÇAIS	DEUTSCH	ESPAÑOL
FP: In front of exhaust turbocharger	Fitting Position: in front of exhaust turbocharger	Lato montaggio: davanti a turbocompressore	Côté d'assemblage: devant le turbocompresseur à gaz d'échappement	Einbauseite: vor Abgasturbolader	Lado de montaje: de turbocompresor escape
FP: In front of the catalyst	Fitting Position: in front of the catalyst	Lato montaggio: davanti al catalizzatore	Côté d'assemblage: devant le catalyseur	Einbauseite: vor Katalysator	Lado de montaje: delante del catalizador
FP: In front of the radiator	Fitting Position: in front of the radiator	Lato montaggio: davanti al radiatore	Côté d'assemblage: devant le radiateur	Einbauseite: vor dem Kühler	Lado de montaje: delante del radiador
FP: In fuel tank	Fitting Position: in fuel tank	Lato montaggio: nel serbatoio carburante	Côté d'assemblage: dans le réservoir de carburant	Einbauseite: im Kraftstoffbehälter	Lado de montaje: incl. depósito combustible
FP: in transm.housing	Fitting Position: in transmission housing	Lato montaggio: nella scatola del cambio	Côté d'assemblage: dans la boîte de transmission	Einbauseite: im Getriebegehäuse	Lado de montaje: en cárter de transmisión
FP: Inlet	Fitting Position: Inlet	Lato montaggio: Entrata	Côté d'assemblage: Entrée	Einbauseite: Eingang	Lado de montaje: Entrada
FP: Inner	Fitting Position: inner	Lato montaggio: interno	Côté d'assemblage: intérieur	Einbauseite: innen	Lado de montaje: interior
FP: Intake Manifold	Fitting Position: Intake Manifold	Lato montaggio: Collettore d'aspirazione	Côté d'assemblage: Collecteur d'admission	Einbauseite: Ansaugkrümmer	Lado de montaje: Colector de admisión
FP: Intake Side	Fitting Position: Intake Side	Lato montaggio: Lato aspirazione	Côté d'assemblage: Côté d'admission	Einbauseite: Einlassseite	Lado de montaje: Lado de admisión
FP: Intercooler	Fitting Position: Intercooler	Lato montaggio: Intercooler	Côté d'assemblage: Intercooler, échangeur	Einbauseite: Ladeluftkühler	Lado de montaje: Refrigerador de aire de sobrealimentación
FP: Left	Fitting Position: Left	Lato montaggio: Sx	Côté d'assemblage: gauche	Einbauseite: links	Lado de montaje: izquierda
FP: Left and right	Fitting Position: Left and right	Lato montaggio: bilaterale	Côté d'assemblage: côté conducteur + passager av.	Einbauseite: beidseitig	Lado de montaje: ambos lados
FP: Left Front	Fitting Position: Left Front	Lato montaggio: anteriore Sx	Côté d'assemblage: avant gauche	Einbauseite: vorne links	Lado de montaje: Delante, izquierda
FP: Left Front	Fitting Position: Left	Lato montaggio: Sx	Côté d'assemblage: gauche	Einbauseite: links	Lado de montaje: izquierda
FP: Left Rear	Fitting Position: Left Rear	Lato montaggio: posteriore Sx	Côté d'assemblage: arrière gauche	Einbauseite: hinten links	Lado de montaje: Atrás izquierda
FP: Lower	Fitting Position: Lower	Lato montaggio: inferiore	Côté d'assemblage: inférieur	Einbauseite: unten	Lado de montaje: debajo
FP: Middle Silencer	Fitting Position: Middle Silencer	Lato montaggio: Silenziatore centrale	Côté d'assemblage: Pot de détente	Einbauseite: Mittelschalldämpfer	Lado de montaje: silenciador del medio
FP: Outer	Fitting Position: Outer	Lato montaggio: Esterno	Côté d'assemblage: extérieur	Einbauseite: außen	Lado de montaje: exterior
FP: Outlet	Fitting Position: Outlet	Lato montaggio: Uscita	Côté d'assemblage: Sortie	Einbauseite: Ausgang	Lado de montaje: Salida
FP: Outlet Side	Fitting Position: Exhaust Side	Lato montaggio: Lato scarico	Côté d'assemblage: Côté d'échappement	Einbauseite: Auslassseite	Lado de montaje: Lado de escape
FP: Particulate Filter	Fitting Position: Particulate Filter	Lato montaggio: Filtro particellare	Côté d'assemblage: Filtre à particules	Einbauseite: Partikelfilter	Lado de montaje: Filtro de partículas
FP: Pipe at EGR valve	Fitting Position: Pipe at EGR valve	Lato montaggio: Condotto a valvola-EGR	Côté d'assemblage: Ligne à la valve EGR	Einbauseite: Leitung an AGR-Ventil	Lado de montaje: Tubo en válvula EGR
FP: Post-catalyst	Fitting Position: Post-catalyst	Lato montaggio: al Catalizzatore	Côté d'assemblage: après catalyseur	Einbauseite: nach Katalysator	Lado de montaje: después de catalizador
FP: Rear	Fitting Position: Rear	Lato montaggio: posteriore	Côté d'assemblage: arrière	Einbauseite: hinten	Lado de montaje: posterior
FP: Rear Axle	Fitting Position: Rear Axle	Lato montaggio: Assale posteriore	Côté d'assemblage: Essieu arrière	Einbauseite: Hinterachse	Lado de montaje: Eje trasero
FP: Rear Axle Left	Fitting Position: Rear Axle Left	Lato montaggio: Assale posteriore Sx	Côté d'assemblage: Essieu arrière gauche	Einbauseite: Hinterachse links	Lado de montaje: Eje trasero izquierda
FP: Rear Axle left and right	Fitting Position: Rear Axle left and right	Lato montaggio: Assale post. bilaterale	Côté d'assemblage: des deux côtés du pont arrière	Einbauseite: Hinterachse beidseitig	Lado de montaje: eje trasero ambos lados
FP: Rear Axle Right	Fitting Position: Rear Axle Right	Lato montaggio: Assale posteriore Dx	Côté d'assemblage: Essieu arrière droit	Einbauseite: Hinterachse rechts	Lado de montaje: Eje trasero, derecha
FP: right	Fitting Position: Right	Lato montaggio: Dx	Côté d'assemblage: droite	Einbauseite: rechts	Lado de montaje: derecha
FP: Right front	Fitting Position: Right Front	Lato montaggio: anteriore Dx	Côté d'assemblage: avant droite	Einbauseite: vorne rechts	Lado de montaje: Delante, derecha
FP: Right Rear	Fitting Position: Right Rear	Lato montaggio: posteriore Dx	Côté d'assemblage: arrière droite	Einbauseite: hinten rechts	Lado de montaje: Atrás derecha
FP: Throttle Housing	Fitting Position: Throttle Housing	Lato montaggio: Sede valvola a farfalla	Côté d'assemblage: Boîtier papillon	Einbauseite: Drosselklappengehäuse	Lado de montaje: Caja mariposa
FP: to cylinder 3	Fitting Position: to cylinder 3	Lato montaggio: al cilindro 3	Côté d'assemblage: au cylindre 3	Einbauseite: zum Zylinder 3	Lado de montaje: al cilindro 3
FP: to cylinder 4	Fitting Position: to cylinder 4	Lato montaggio: al cilindro 4	Côté d'assemblage: au cylindre 4	Einbauseite: zum Zylinder 4	Lado de montaje: al cilindro 4

APPLICATION LIST GLOSSARY

FA-IGN22Q1

•GLOSSARIO GUIDA APPLICAZIONI •GLOSSAIRE LISTE D'APPLICATIONS •GLOSSAR DER VERWENDUNGSLISTE •GLOSARIO LISTA APLICACIONES

#	ENGLISH	ITALIANO	FRANÇAIS	DEUTSCH	ESPAÑOL
FP: Transmission End	**Fitting Position: Transmission End**	Lato montaggio: sul lato del cambio	Côté d'assemblage: du côté boîte de vitesses	Einbauseite: getriebeseitig	Lado de montaje: lado de engranaje
FP: Turbine Inlet	**Fitting Position: Turbine Inlet**	Lato montaggio: Entrata turbina	Côté d'assemblage: Entrée de turbine	Einbauseite: Turbineneingang	Lado de montaje: Entrada turbina
FP: Upper	**Fitting Position: Upper**	Lato montaggio: Superiore	Côté d'assemblage: supérieur	Einbauseite: oben	Lado de montaje: arriba
FP: Water Pump	**Fitting Position: Water Pump**	Lato montaggio: Pompa acqua	Côté d'assemblage: Pompe à eau	Einbauseite: Wasserpumpe	Lado de montaje: bomba de agua
fuel formation: carburettor	**Fuel Mixture Formation: Carburettor**	Preparazione carburante: Carburatore	Préparation de carburant: Carburateur	Kraftstoffaufbereitung: Vergaser	Preparación del combustible: Carburador
fuel formation: direct injection	**Fuel Mixture Formation: Direct Injection**	Preparazione carburante: Iniezione diretta	Préparation de carburant: Injection directe	Kraftstoffaufbereitung: Direkteinspritzung	Preparación del combustible: Inyección directa
fuel formation: motronic	**Fuel Mixture Formation: Motronic**	Preparazione carburante: Motronic	Préparation de carburant: Motronic	Kraftstoffaufbereitung: Motronic	Preparación del combustible: Motronic
Green	**Housing Colour: xxx**	Colore alloggiamento: xxx	Couleur du carter: xxx	Gehäusefarbe: xxx	Color de carcasa: xxx
Grey	**Housing Colour: xxx**	Colore alloggiamento: xxx	Couleur du carter: xxx	Gehäusefarbe: xxx	Color de carcasa: xxx
info: xxx	**Technical Information Number: xxx**	N° informazione tecnica: xxx	Numéro d'information technique: xxx	Technische Informationsnummer: xxx	Nº de información técnica: xxx
interference suppressed	**Interference suppressed: xxx**	schermato/a: xxx	déparasité: xxx	entstört: xxx	con supresión de interferencias: xxx
L: xxxmm	**Length [mm]: xxx**	Lunghezza [mm]: xxx	Longueur [mm]: xxx	Länge [mm]: xxx	Longitud [mm]: xxx
L3	**Emission Standard: L3**	Norma sui gas di scarico: L3	Norme concernant les gaz d'échappement: L3	Abgasnorm: L3	Norma de emisiones: L3
L4	**Emission Standard: L4**	Norma sui gas di scarico: L 4	Norme concernant les gaz d'échappement: L4	Abgasnorm: L4	Norma de emisiones: L4
MADE BY: xxx	**Vehicle Production Country: xxx**	Paese produzione veicolo: xxx	Pays constructeur du véhicule: xxx	Fahrzeugproduktionsland: xxx	País producción vehículo: xxx
MODEL FROM: xxx	**Model year from: xxx**	Anno modello da: xxx	Année à partir de: xxx	Modelljahr ab: xxx	año modelo desde: xxx
MODEL TO: xxx	**Model year to: xxx**	Anno modello fino a: xxx	Année jusqu'à: xxx	Modelljahr bis: xxx	año modelo hasta: xxx
-model: xxx	**not for code: xxx**	non per modello: xxx	pas pour le modèle: xxx	nicht für Baumuster: xxx	no apto para el tipo: xxx
Multi Point Injection (MPI)	**Injection System: Multi Point Injection (MPI)**	Sistema iniezione: MPI (Multipoint)	Système d'injection: MPI (MultiPoint)	Einspritzsystem: MPI (MultiPoint)	Sistema de inyección: MPI (MultiPoint)
NOT FOR: xxx	**not for country-spec. model: xxx**	non per versione per paese: xxx	pas pour version-pays: xxx	nicht für Länderausführung: xxx	no para modelo país: xxx
NOT MADE BY: xxx	**not for vehicle production country: xxx**	non per paese produzione veicolo: xxx	pas pour pays constructeur du véhicule: xxx	nicht für Fahrzeugproduktionsland: xxx	no para país producción vehículos: xxx
oe: xxx	**for OE number: xxx**	per N° OE: xxx	pour numéro OE: xxx	für OE-Nummer: xxx	para OE N°: xxx
Orange	**Housing Colour: xxx**	Colore alloggiamento: xxx	Couleur du carter: xxx	Gehäusefarbe: xxx	Color de carcasa: xxx
org.: xxx->	**for organisation number from: xxx**	per numero organizzazione da: xxx	pour numéro d'organisation à partir de: xxx	für Organisationsnummer ab: xxx	para números de organización desde: xxx
petrol injection	**Fuel Mixture Formation: Petrol Injection**	Preparazione carburante: Iniezione benzina	Préparation de carburant: Injection d'essence	Kraftstoffaufbereitung: Benzineinspritzung	Preparación del combustible: Inyección de gasolina
pole nr.: xxx	**Number of Poles: xxx**	N° poli: xxx	Nombres de pôles: xxx	Pol-Anzahl: xxx	Número de polos: xxx
prod. nr.: xxx->	**Production number from: xxx**	N° produzione da: xxx	Nº de production à partir de: xxx	Produktionsnummer ab: xxx	nº de producción desde: xxx
production date ->: xxx	**Production date to: xxx**	Data di produzione fino a: xxx	Date de production jusqu'à: xxx	Produktionsdatum bis: xxx	fecha de producción hasta: xxx
production date: xxx->	**Production date from: xxx**	Data di produzione da: xxx	Date de production à partir de: xxx	Produktionsdatum ab: xxx	fecha de producción desde: xxx
Qty: xxx	**Quantity: xxx**	Quantità: xxx	Quantité: xxx	Menge: xxx	Cantidad: xxx
Red	**Housing Colour: xxx**	Colore alloggiamento: xxx	Couleur du carter: xxx	Gehäusefarbe: xxx	Color de carcasa: xxx
resist.: xxxohm	**Resistance [Ohm]: xxx**	Resistenza [Ohm]: xxx	Résistance [ohm]: xxx	Widerstand [Ohm]: xxx	Resistencia [Ohm]: xxx
RPM to: xxx[1/min]	**RPM to [1/min]: xxx**	N° giri fino a [1/min.]: xxx	Régime mot. jusqu'à [1/min]: xxx	Drehzahl bis [1/min]: xxx	vel. giro hasta [1/min]: xxx
SA: xxx	**for SA code: xxx**	per codice SA: xxx	pour SA code: xxx	für SA Code: xxx	para código SA: xxx
-SA: xxx	**not for SA code: xxx**	non per codice SA: xxx	pas pour SA code: xxx	nicht für SA Code: xxx	no para código SA: xxx
SOHC/OHC	**Camshaft: SOHC/OHC**	Albero a camme: SOHC/OHC	Arbre à cames: SOHC/OHC	Nockenwelle: SOHC/OHC	Árbol de levas: SOHC/OHC
t.tnr.: xxx	**Transmission Type: xxx**	Tipo di trasmissione: xxx	Type de boîte de vitesses: xxx	Getriebetyp: xxx	Tipo de caja de cambios: xxx

marketing@facet.it

APPLICATION LIST GLOSSARY

FA-IGN22Q1

•GLOSSARIO GUIDA APPLICAZIONI •GLOSSAIRE LISTE D'APPLICATIONS •GLOSSAR DER VERWENDUNGSLISTE •GLOSARIO LISTA APLICACIONES

#	ENGLISH	ITALIANO	FRANÇAIS	DEUTSCH	ESPAÑOL
-transm. type: xxx	**not for transmission type: xxx**	non per tipo di trasmissione: xxx	pas pour type de transmission: xxx	nicht für Getriebetyp: xxx	no para tipo de transmisión: xxx
version: xxx	**Version: xxx**	Versione: xxx	Version: xxx	Version: xxx	Versión: xxx
VET.: xxx->	**VET Number from: xxx**	N° VET da: xxx	Numéro VET à partir de: xxx	VET-Nummer ab: xxx	nº VET desde: xxx
White	**Housing Colour: xxx**	Colore alloggiamento: xxx	Couleur du carter: xxx	Gehäusefarbe: xxx	Color de carcasa: xxx
xxx->	**Construction year from: xxx**	Anno da: xxx	Année à partir de: xxx	Baujahr ab: xxx	año construcción desde: xxx
xxxkW	**Power [kW]: xxx**	Potenza [KW]: xxx	Puissance [kW]: xxx	Leistung [kW]: xxx	Potencia [kW]: xxx
Yellow	**Housing Colour: xxx**	Colore alloggiamento: xxx	Couleur du carter: xxx	Gehäusefarbe: xxx	Color de carcasa: xxx

ILLUSTRATED SECTION

FA-IGN22Q1

-PARTE FIGURATA -PARTIE ILLUSTRÉE -BILDTEIL -PARTE ILUSTRADA

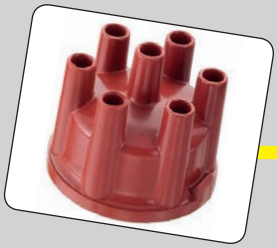

CONDENSERS

·CONDENSATORI ·CONDENSATEURS ·KONDENSATOREN ·CONDENSADORES

(A) P/NRS. - NOTES

- CODICI - NOTE
- RÉFS. - NOTES
- ARTIKEL-NR. - ANMERKUNGEN
- CODIGOS - NOTAS

0.0179/96 — 1

CONDENSERS

Adatt./Suitable: **BOSCH**

BOSCH
1 237 330 310

GENERAL MOTORS
93 150 082

VW
060 905 295

03 **Supplied until depletion**
- Fornibile fino ad esaurimento delle scorte
- Fourni jusqu'à épuisement du stock
- Lieferbar solange vorrat reicht
- Suministrado hasta el stock termina

(B) PICTURE + TECHNICAL INFO

- FOTO + INFORMAZIONE TECNICA
- ILLUSTRATION + INFORMATION TÉCHNIQUE
- BILD + TECHNISCHE INFO
- FOTO + INFORMACIÓN TÉCNICA

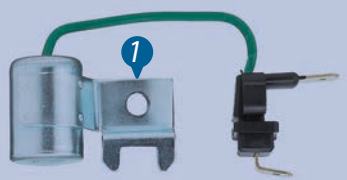

Ø=mm	h=mm	µF
18	25	0,23

(C) APPLICATION LIST

- GUIDA APPLICAZIONI
- LISTE D'APPLICATIONS
- ANWENDUNGSTABELLE
- LISTA DE APLICACIONES

VW		
CADDY I 1.5	JB	08/82 ⇨ 07/83
CADDY I 1.6	EW, HN	01/83 ⇨ 07/92
DERBY 1.0	GL	10/81 ⇨ 12/84
GOLF II 1.0	GN	11/83 ⇨ 08/85
GOLF II 1.6	EZ	08/83 ⇨ 07/92
GOLF II 1.6 [CHE] [SWE]	HM	08/83 ⇨ 07/85
JETTA II 1.6	EZ, HM	12/83 ⇨ 07/92
POLO II 1.0	GL	10/81 ⇨ 10/86
SCIROCCO I 1.5	JB	08/77 ⇨ 07/80
SCIROCCO II 1.6	FR, FR	08/80 ⇨ 04/84

(A)

1 **# FACET**

2 **OEM P/NRS.**
·CODICI ORIGINALI
·RÉFS. D'ORIGINE
·ORIGINALTEILE-NR.
·CODIGOS ORIGINALES

3 **PACKAGING SIZE**
·FORMATO CONFEZIONE
·FORMAT DU CONDITIONNEMENT
·ABPACKENSGROESSE
·TAMAÑO DEL ENVASE

4 **NOTE**
·NOTE
·NOTES
·BERMERKUNGEN
·NOTAS

(B)

1 **PICTURE**
·FOTO
·PHOTO
·BILD
·FOTO

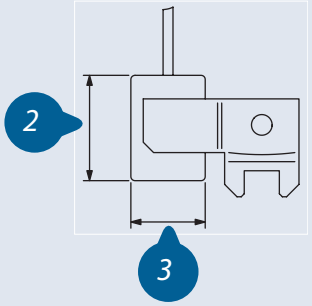

4 **CAPACITY**
·CAPACITÀ
·CAPACITÉ
·CAPAZITÄT
·CAPACIDAD

FACET 0.0130 — 1

CONDENSERS

Adatt./Suitable: ***BOSCH***

BOSCH
1 237 330 035
1 237 330 036
1 237 330 039
2 207 330 011

VW
411 963 073

[03] **Supplied until depletion**
- Fornibile fino ad esaurimento delle scorte
- Fourni jusqu'à épuisement du stock
- Lieferbar solange vorrat reicht
- Suministrado hasta el stock termina

Ø=mm	h=mm	µF
18	21	0,18

FACET 0.0179/80 — 1

CONDENSERS

Adatt./Suitable: ***BOSCH***

BOSCH
2 207 330 041
2 207 330 050

[00] **Eliminated on 01-03-2022. Please verify the availability through our local distributors**
- Eliminato il 01-03-2022. Verificare la disponibilità presso i nostri distributori
- Eliminé le 01-03-2022. Verifier la disponibilité auprès de nos distributeurs sur place
- Am 01-03-2022 gestrichen. Evtl. Verfügbarkeit bitte bei unseren Händlern prüfen
- Eliminado en fecha 01-03-2022. Verificar la disponibilidad a través de nuestros distribuidores locales

Ø=mm	h=mm	µF
18	21	0,18

FACET 0.0179/95 — 1

CONDENSERS

Adatt./Suitable: ***BOSCH***

BOSCH
1 237 330 316

GENERAL MOTORS
93 150 083

SAAB
93 51 743

VW
052 905 295

[00] **Eliminated on 07-04-2021. Please verify the availability through our local distributors**
- Eliminato il 07-04-2021. Verificare la disponibilità presso i nostri distributori
- Eliminé le 07-04-2021. Verifier la disponibilité auprès de nos distributeurs sur place
- Am 07-04-2021 gestrichen. Evtl. Verfügbarkeit bitte bei unseren Händlern prüfen
- Eliminado en fecha 07-04-2021. Verificar la disponibilidad a través de nuestros distribuidores locales

Ø=mm	h=mm	µF
18	25	0,23

VW		
POLO II 1.1	HB	10/81 ⇨ 09/89
POLO II 1.3	GT, HH, HJ, HK, HW	10/81 ⇨ 07/88
JETTA II 1.3	GT, HK	01/84 ⇨ 06/87
DERBY 1.1	HB	02/77 ⇨ 09/81
DERBY 1.3	HH	02/77 ⇨ 09/81
GOLF I 1.3	HK	08/83 ⇨ 07/86
GOLF II 1.0	GN	11/83 ⇨ 08/85
GOLF II 1.3	GT, HK	08/83 ⇨ 06/87
SCIROCCO I 1.1	FA	04/74 ⇨ 07/79
SCIROCCO I 1.3	GF	08/79 ⇨ 07/80
SCIROCCO II 1.3	HK	08/83 ⇨ 07/84

FACET 0.0179/96 — 1

CONDENSERS

Adatt./Suitable: ***BOSCH***

BOSCH
1 237 330 310

GENERAL MOTORS
93 150 082

VW
060 905 295

[03] **Supplied until depletion**
- Fornibile fino ad esaurimento delle scorte
- Fourni jusqu'à épuisement du stock
- Lieferbar solange vorrat reicht
- Suministrado hasta el stock termina

Ø=mm	h=mm	µF
18	25	0,23

VW		
POLO II 1.0	GL	10/81 ⇨ 10/86
JETTA II 1.6	EZ, HM	12/83 ⇨ 07/92
CADDY I 1.5	JB	08/82 ⇨ 07/83
CADDY I 1.6	EW, HN	01/83 ⇨ 07/92
DERBY 1.0	GL	10/81 ⇨ 12/84

VW		
GOLF II 1.0	GN	11/83 ⇨ 08/85
GOLF II 1.6	EZ	08/83 ⇨ 07/92
GOLF II 1.6 [CHE] [SWE]	HM	08/83 ⇨ 07/85
SCIROCCO I 1.5	JB	08/77 ⇨ 07/80
SCIROCCO II 1.6	1HyFAD	08/80 ⇨ 04/84

FACET 0.0179/112 — 1

CONDENSERS

Adatt./Suitable: ***BOSCH***

BOSCH
1 237 330 307
1 237 330 340
1 237 330 353

GENERAL MOTORS
90 009 490
90 114 106
93 150 118
93 150 586

OPEL
12 12 253
12 12 259
12 12 260
90009490

[03] **Supplied until depletion**
- Fornibile fino ad esaurimento delle scorte
- Fourni jusqu'à épuisement du stock
- Lieferbar solange vorrat reicht
- Suministrado hasta el stock termina

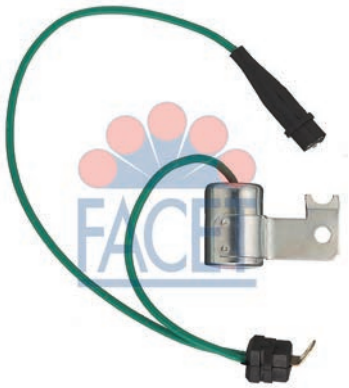

Ø=mm	h=mm	µF
18	25	0,23

OPEL		
CORSA A 1.0	10S	09/82 ⇨ 03/93
CORSA A 1.2	12N, 12NC	09/82 ⇨ 08/90
CORSA A 1.2 N	12NC	01/85 ⇨ 10/87
KADETT B 1.1	11N	08/71 ⇨ 08/73
KADETT D 1.0	10N	09/79 ⇨ 08/82
KADETT E 1.2	12SC	09/84 ⇨ 07/86

FACET 0.0179/157

1

CONDENSERS

Adatt./Suitable: ***BOSCH***

BOSCH
1 237 330 348
VW
036 905 295 B

[03] **Supplied until depletion**
- Fornibile fino ad esaurimento delle scorte
- Fourni jusqu'à épuisement du stock
- Lieferbar solange vorrat reicht
- Suministrado hasta el stock termina

Ø=mm	h=mm	µF
18	25	0,23

FACET 0.0323

1

CONDENSERS

Adatt./Suitable: ***DUCELLIER***

ALFA ROMEO
116 55 05 011 03/04
BOSCH
1 237 330 801
1 237 330 803
DUCELLIER
1203
FIAT
9934266
GENERAL MOTORS
3 474 600
LANCIA
9934266
Motorcraft
EDC 62
EDC 173
PEUGEOT
5948 05
5948 06
RENAULT
08 53 712 500
77 01 022 130
VOLVO
3102885
31028855
3277441
32774416

[00] **Eliminated on 10-12-2021. Please verify the availability through our local distributors**
- Eliminato il 10-12-2021. Verificare la disponibilità presso i nostri distributori
- Eliminé le 10-12-2021. Verifier la disponibilité auprès de nos distributeurs sur place
- Am 10-12-2021 gestrichen. Evtl. Verfügbarkeit bitte bei unseren Händlern prüfen
- Eliminado en fecha 10-12-2021. Verificar la disponibilidad a través de nuestros distribuidores locales

Ø=mm	h=mm	µF
17	38,5	0,23

DACIA		
1210 1.2	--	01/69 ⇨
1310 1.3	810-02/-99	05/83 ⇨ 07/04
1410 1.4	--	01/69 ⇨
ARO 10	--	01/72 ⇨ 12/80

FIAT		
127 0.9	100GL.048	06/71 ⇨ 05/83
128 1.1	128A.000	03/69 ⇨ 12/84
131 1.3 Mirafiori	131A6.000	10/74 ⇨ 09/81
132 1.6	132C.000	05/77 ⇨ 09/82
242 1.6	124B3.000	10/75 ⇨ 07/82
FIORINO I 900	100GL.000	10/77 ⇨ 10/86
LANCIA		
A 112 0.9 Junior	A112A5.000	03/81 ⇨ 06/86
PEUGEOT		
504 1.8 Injection	KF5, KF6	07/68 ⇨ 02/71
RENAULT		
4 0.8	80001, 800705	09/71 ⇨ 12/88
5 1.3	810719, 810726	09/76 ⇨ 09/84
20 2.0	829700, 829701, 829702, 829703, 829.01	10/77 ⇨ 12/83

FACET 0.0334

1

CONDENSERS

Adatt./Suitable: ***DUCELLIER***

ALFA ROMEO
700 299
60748381
9950152
BOSCH
1 237 330 805
1 237 330 806
DUCELLIER
609 504
FIAT
9937715
GENERAL MOTORS
7 992 353
7 992 359
93 150 117
93 150 124
PEUGEOT
5948 11
5948 17
5948 27
RENAULT
77 01 018 729
77 01 020 079
ROVER
GSC113
RTC6620

[00] **Eliminated on 31-08-2021. Please verify the availability through our local distributors**
- Eliminato il 31-08-2021. Verificare la disponibilità presso i nostri distributori
- Eliminé le 31-08-2021. Verifier la disponibilité auprès de nos distributeurs sur place
- Am 31-08-2021 gestrichen. Evtl. Verfügbarkeit bitte bei unseren Händlern prüfen
- Eliminado en fecha 31-08-2021. Verificar la disponibilidad a través de nuestros distribuidores locales

[03] **Supplied until depletion**
- Fornibile fino ad esaurimento delle scorte
- Fourni jusqu'à épuisement du stock
- Lieferbar solange vorrat reicht
- Suministrado hasta el stock termina

Ø=mm	h=mm	µF
17	38,5	0,23

ALFA ROMEO		
ALFASUD 1.2	AR30102	06/72 ⇨ 09/84
CITROËN		
AXEL 11	G11/631	01/84 ⇨ 03/91
CX I 2400	M23-623	08/76 ⇨ 06/80
FIAT		
DUCATO I 1.8	169B	01/82 ⇨ 12/88
LAND ROVER		
90 2.5 4x4	17H	09/85 ⇨ 08/90
110/127 2.5 4x4	17H	10/85 ⇨ 07/90
DEFENDER 2.25	--	01/87 ⇨
PEUGEOT		
104 0.9	108(XV5)	10/79 ⇨ 10/83
305 1.5	117(XR5S)	05/80 ⇨ 09/82
505 1.8	105(XM7), 105C(XM7A)	06/81 ⇨ 10/86
J9 1.6	XC7P	03/80 ⇨ 06/87
RENAULT		
5 1.4 Alpine A5	840725	09/77 ⇨ 09/81
14 1.4	150	09/79 ⇨ 06/83

ROVER		
MINI 1.0	--	01/85 ⇨
MINI 1.3	--	01/85 ⇨
TALBOT		
SAMBA 1.1	XW7	01/81 ⇨ 06/86

FACET 0.0339

1

CONDENSERS

Adatt./Suitable: ***DUCELLIER***

DUCELLIER
450 005
FIAT
9936734
9938166
GENERAL MOTORS
93 150 455
SEAT
000 389 973 1
000 993 673 4
SE 141914.007C

[00] **Eliminated on 02-08-2021. Please verify the availability through our local distributors**
- Eliminato il 02-08-2021. Verificare la disponibilità presso i nostri distributori
- Eliminé le 02-08-2021. Verifier la disponibilité auprès de nos distributeurs sur place
- Am 02-08-2021 gestrichen. Evtl. Verfügbarkeit bitte bei unseren Händlern prüfen
- Eliminado en fecha 02-08-2021. Verificar la disponibilidad a través de nuestros distribuidores locales

Ø=mm	h=mm	µF
17	38,5	0,23

FIAT		
PANDA I 750	141B.000	01/86 ⇨ 01/95
PANDA I 800	100GL6.000	02/81 ⇨ 12/85
PANDA I 900	100GL3.000	10/80 ⇨ 06/94
PANDA I 900 CL	146A.048	01/86 ⇨ 04/91
REGATA 1.1 60 , 60 L	138B.000	10/83 ⇨ 08/86
REGATA 1.6	149A.000	10/84 ⇨ 06/89
REGATA 70 1.3	138B2.000, 149A3.000	09/83 ⇨ 07/89
REGATA 85 1.6	149A.000	10/83 ⇨ 06/90
RITMO I 1.1	146A4.048	04/85 ⇨ 12/87
RITMO I 1.3	149A3.000	11/83 ⇨ 08/85
RITMO II 75 1.5	138A2.000	09/85 ⇨ 12/88
UNO 45 0.9	146A.000, 146A1.000	03/83 ⇨ 07/96
UNO 45 0.9 Trend	146A.048	09/89 ⇨ 09/92
UNO 60 1.1 SX	--	01/83 ⇨ 12/85
SEAT		
FURA 0.9	100GL3000	01/82 ⇨ 06/86
IBIZA I 0.9	146A000	08/86 ⇨ 05/93
PANDA 34 850	--	01/80 ⇨ 12/83
PANDA 35 850	--	01/80 ⇨ 12/83

FACET 0.0397

1

CONDENSERS

Adatt./Suitable: ***FEMSA***

BOSCH
9 232 337 354
9 232 337 354 706
FEMSA
10249-43
RENAULT
77 02 124 317

[03] **Supplied until depletion**
- Fornibile fino ad esaurimento delle scorte
- Fourni jusqu'à épuisement du stock
- Lieferbar solange vorrat reicht
- Suministrado hasta el stock termina

Ø=mm	h=mm	µF
18	31,5	0,25

RENAULT		
4 0.8	80001	09/71 ⇨ 12/88

FACET 0.0617

1

CONDENSERS

Adatt./Suitable: ***MARELLI***

ALFA ROMEO
701 707
116 55 05 011 01/09
60730444
60749285
BOSCH
1 237 330 828
FIAT
9928245
GENERAL MOTORS
93 150 084
MAGNETI MARELLI
CE 22 B
CE 22 C
CE 39 A
CE 39 G
SEAT
000 389 806 0
NG1 811 683 1

[03] **Supplied until depletion**
- Fornibile fino ad esaurimento delle scorte
- Fourni jusqu'à épuisement du stock
- Lieferbar solange vorrat reicht
- Suministrado hasta el stock termina

Ø=mm	h=mm	µF
18	25	0,25

ALFA ROMEO		
ALFASUD 1.2	AR30102	06/72 ⇨ 09/84
ALFETTA 1.8	AR01608X	07/74 ⇨ 04/82
GIULIETTA I 1.3	AR01644	10/77 ⇨ 06/83
FIAT		
127 0.9	100GL.048	06/71 ⇨ 05/83
127 1.0	127A.000	01/77 ⇨ 12/86
131 1.3 Mirafiori	131A6.000	10/74 ⇨ 09/81

FIAT		
132 1.6	132C.000	05/77 ⇨ 09/82
ARGENTA 1600	132D.000	04/81 ⇨ 12/85
ARGENTA 1600 i.e	132D.000	04/81 ⇨ 12/85
FIORINO I 1.0	127A.000	01/80 ⇨ 12/87
FIORINO I 1050	127A.000	01/80 ⇨ 12/87
FIORINO I 900	100GL.000	10/77 ⇨ 10/86
PANDA I 800	100GL6.000	02/81 ⇨ 12/85
PANDA I 950	A112B1.054	09/82 ⇨ 08/83
PANDA I 950 4x4	A112B1.054	09/83 ⇨ 12/86
SEAT		
FURA 0.9	100GL3000	01/82 ⇨ 06/86
PANDA 34 850	--	01/80 ⇨ 12/83
PANDA 35 850	--	01/80 ⇨ 12/83

FACET 0.0627

1

CONDENSERS

Adatt./Suitable: ***MARELLI***

FIAT
9938268
MAGNETI MARELLI
CE 39 P

[03] **Supplied until depletion**
- Fornibile fino ad esaurimento delle scorte
- Fourni jusqu'à épuisement du stock
- Lieferbar solange vorrat reicht
- Suministrado hasta el stock termina

Ø=mm	h=mm	µF
18	25	0,25

FIAT		
REGATA 1.6	149A.000	10/84 ⇨ 06/89
REGATA 70 1.3	138B2.000, 149A3.000	09/83 ⇨ 07/89
REGATA 85 1.6	149A.000	10/83 ⇨ 06/90
UNO 60 1.1 SX	--	01/83 ⇨ 12/85

FACET 0.0628

1

CONDENSERS

Adatt./Suitable: ***MARELLI***

FIAT
9938269
MAGNETI MARELLI
CE 39 R
SEAT
SE 141914.007A

[03] **Supplied until depletion**
- Fornibile fino ad esaurimento delle scorte
- Fourni jusqu'à épuisement du stock
- Lieferbar solange vorrat reicht
- Suministrado hasta el stock termina

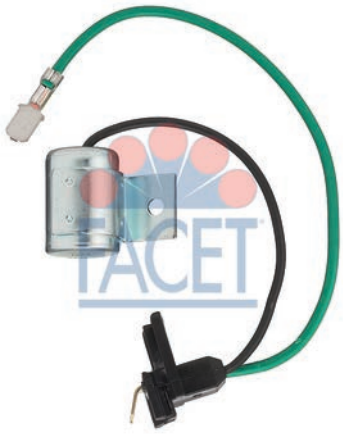

Ø=mm	h=mm	µF
18	25	0,25

FIAT		
126 700	126A2.000, 126A2.048	09/87 ⇨ 06/96
PANDA I 750	141B.000	01/86 ⇨ 01/95
PANDA I 900	100GL3.000	10/80 ⇨ 06/94
PANDA I 900 CL	146A.048	01/86 ⇨ 12/92
UNO 45 0.9	146A.000, 146A1.000	03/83 ⇨ 07/96
UNO 45 0.9 Trend	146A.048	09/89 ⇨ 09/92
FSO		
126P 0.6	126A1.048	07/77 ⇨ 12/91
SEAT		
IBIZA I 0.9	146A000	08/86 ⇨ 05/93
MARBELLA 0.9	09NCA	01/87 ⇨ 12/93
TERRA 0.9	09NCA	02/87 ⇨ 12/96

FACET 0.0675/31 — 1

CONDENSERS

Adatt./Suitable: ***MITSUBISHI***

BOSCH
F 005 X04 582
NISSAN
22102-01M11

[03] **Supplied until depletion**
- Fornibile fino ad esaurimento delle scorte
- Fourni jusqu'à épuisement du stock
- Lieferbar solange vorrat reicht
- Suministrado hasta el stock termina

Ø=mm	h=mm	µF
15	23	0,22

NISSAN		
VANETTE II 2.0	Z20S, Z20S	07/87 ⇨ 08/94

FACET 0.0856 — 1

CONDENSERS

Adatt./Suitable: ***SEV***

BOSCH
0 190 309 009
1 237 330 810
1 237 330 811
DAF
200889
GENERAL MOTORS
7 992 253
7 992 680
7 992 850
7 992 852
MAGIRUS-DEUTZ
1169097
MAN
90.80110-1111
MERCEDES-BENZ
A 001 154 43 06
A 001 154 48 06
PEUGEOT
5948 04
RENAULT
08 02 119 800
08 51 877 600
08 54 233 000
08 54 910 100
08 54 923 300
08 54 943 800
77 01 000 998
77 01 008 855
77 01 012 471
77 01 021 676

[00] **Eliminated on 10-12-2021. Please verify the availability through our local distributors**
- Eliminato il 10-12-2021. Verificare la disponibilità presso i nostri distributori
- Eliminé le 10-12-2021. Verifier la disponibilité auprès de nos distributeurs sur place
- Am 10-12-2021 gestrichen. Evtl. Verfügbarkeit bitte bei unseren Händlern prüfen
- Eliminado en fecha 10-12-2021. Verificar la disponibilidad a través de nuestros distribuidores locales

Ø=mm	h=mm	µF
17	38,5	0,23

RENAULT		
4 0.8	800705	10/83 ⇨ 10/88

CONTACT SETS

•COPPIE CONTATTI •RUPTEURS •KONTAKTSÄTZE •PLATINOS

(A) P/NRS. - NOTES

- CODICI - NOTE
- RÉFS. - NOTES
- ARTIKEL-NR. - ANMERKUNGEN
- CODIGOS - NOTAS

1.4940 — 1

CONTACT SETS

Adatt./Suitable: *MARELLI*

FIAT
8660
9919623
9919723

MAGNETI MARELLI
711 185 01
711 985 01

RENAULT
77 02 038 190

ZASTAVA
1335052

160 **Ventilated contact set:**
- Contatti ventilati:
- Rupteur en version ventilée:
- Belüfteter Kontaktsatz:
- Juego platinos ventilados:

1.4940HDV

(B) PICTURE + TECHNICAL INFO

- FOTO + INFORMAZIONE TECNICA
- ILLUSTRATION + INFORMATION TÉCHNIQUE
- BILD + TECHNISCHE INFO
- FOTO + INFORMACIÓN TÉCNICA

(C) APPLICATION LIST

- GUIDA APPLICAZIONI
- LISTE D'APPLICATIONS
- ANWENDUNGSTABELLE
- LISTA DE APLICACIONES

FIAT		
X 1/9 1.3	128AS.000	10/75 ⇨ 06/78
ZASTAVA		
101 1.1	128A.000, 128A.064	05/75 ⇨ 12/93
101 1.1 Super	128AC5.000	07/79 ⇨ 09/81
YUGO 0.9	9A, 9A	04/80 ⇨ 06/92

(A)

1 **# FACET**

2 **OEM P/NRS.**
·CODICI ORIGINALI
·RÉFS. D'ORIGINE
·ORIGINALTEILE-NR.
·CODIGOS ORIGINALES

3 **PACKAGING SIZE**
·FORMATO CONFEZIONE
·FORMAT DU CONDITIONNEMENT
·ABPACKENSGROESSE
·TAMAÑO DEL ENVASE

4 **NOTE**
·NOTE
·NOTES
·BEMERKUNGEN
·NOTAS

(B)

1 **PICTURE**
·FOTO
·PHOTO
·BILD
·FOTO

marketing@facet.it

FACET 1.1805

1

CONTACT SETS

Adatt./Suitable: *ACME*

ACME
1002
101.300
711.101.300

FACET 1.1806

1

CONTACT SETS

Adatt./Suitable: *ACME*

ACME
005.300
3186
711.005.300

FACET 1.2521

1

CONTACT SETS

Adatt./Suitable: *BOSCH*

BOSCH
1 237 013 008

FORD
1 151 630 2
5 441 16
G 516 302

GENERAL MOTORS
7 992 221

MERCEDES-BENZ
A 000 158 20 90

PORSCHE
616 602 226 00

VOLVO
238036
2380368
238859
2388593

[03] **Supplied until depletion**
- Fornibile fino ad esaurimento delle scorte
- Fourni jusqu'à épuisement du stock
- Lieferbar solange vorrat reicht
- Suministrado hasta el stock termina

FORD		
TAUNUS 12M 1.2	--	12/51 ⇨ 04/67
TAUNUS 12M 1.5	--	09/58 ⇨ 04/67
TAUNUS 12M 1.5 TS	--	12/62 ⇨ 04/67
TAUNUS 15M 1.5	--, TV15H	09/54 ⇨ 07/71
TAUNUS 15M 1.5 XL/RS	--, TV15H	01/68 ⇨ 06/71
TAUNUS 17M 1.5	--	09/60 ⇨ 10/68
TAUNUS 17M 1.7	--	08/57 ⇨ 04/74
TAUNUS 17M 1.7 S	--	09/60 ⇨ 01/65
TRANSIT I 1.5	--	06/58 ⇨ 08/65
TRANSIT I 1250 S-2 Klein-LKW	--	10/57 ⇨ 07/67
TRANSIT I K-40 1.5	--	04/55 ⇨ 04/67
MERCEDES-BENZ		
CLASSE S I 250 SE	M129.980	01/66 ⇨ 12/67
CLASSE SL III 300 SL	M103.982	09/85 ⇨ 08/89
COUPE 250 SE	M129.980, M129.981	01/65 ⇨ 12/67
COUPE 280 SE	M130.980, M130.984	01/67 ⇨ 12/71
HECKFLOSSE 200	M121.940	07/65 ⇨ 02/68
PAGODE 250 SL	M129.982	01/66 ⇨ 01/68
VOLVO		
140 1.8	B18A	08/66 ⇨ 07/68
140 1.8 S	B18A	08/66 ⇨ 07/68
P 121 1.8	B18, B18A	05/59 ⇨ 05/71
P 122 S AMAZON 1.8	B18	05/59 ⇨ 07/67
PV 544 1.8	B18A	08/61 ⇨ 07/67

FACET 1.2529HDV

1

CONTACT SETS

Adatt./Suitable: *BOSCH*

BOSCH
1 237 013 006

FIAT
9927624

MERCEDES-BENZ
A 000 158 07 90
A 000 158 18 90

OPEL
16 12 006
RP121202

VOLVO
233910
2339109

VW
SP 183
SP 184
111 998 053
111 998 055
181 998 053
892 031 090

ALFA ROMEO		
GIULIA 1300 Super	AR00530	01/74 ⇨ 12/78
GIULIA 1300 TI	--	04/69 ⇨ 07/75
AUDI		
90 SUPER 1.8	21, 8921	09/66 ⇨ 08/71
BMW		
1500-2000 1600	M10B16(16A)	04/64 ⇨ 04/68
1500-2000 1800	M118	08/63 ⇨ 09/69
1500-2000 1800 Ti	M118	10/63 ⇨ 04/68
1500-2000 2000 Ti / Tilux	18F209	01/66 ⇨ 07/72
1502-2002 1600 Ti	M10B16(16A)	09/67 ⇨ 11/69
1502-2002 2002	18F209	02/68 ⇨ 07/75
1502-2002 2002 Ti	18F209	06/68 ⇨ 04/72
1502-2002 2002 Tii	18F209	01/71 ⇨ 07/75
1600 GT 1.6	M10B16(16A)	10/67 ⇨ 05/69
2000 CS	18F209	10/65 ⇨ 06/70
MERCEDES-BENZ		
/8 230.6	M180.954	01/68 ⇨ 11/76
/8 250	M114.920	01/68 ⇨ 08/72
/8 250 C	M114.920	04/69 ⇨ 06/72
/8 250 CE	M114.980	04/69 ⇨ 04/72
/8 280	M110.921	06/72 ⇨ 11/76
/8 280 C	M110.921	06/72 ⇨ 02/77
CLASSE S I 280 S	M110.922	08/72 ⇨ 07/80
CLASSE SL I 190 SL	M121.921, M121.928	01/55 ⇨ 12/63
HECKFLOSSE 190 C	M121.924	04/61 ⇨ 08/65
HECKFLOSSE 200	M121.940	07/65 ⇨ 02/68
PONTON 190 b	M121.920	06/59 ⇨ 12/61
OPEL		
ADMIRAL 2.6 S	26S	04/64 ⇨ 09/65
YUGO		
311 1.1	128A4	04/83 ⇨ 04/91
511 1.1	128A4	04/83 ⇨ 04/91

FACET 1.2532HDV

1

CONTACT SETS

Adatt./Suitable: *BOSCH*

BOSCH
1 237 013 039

GENERAL MOTORS
7 992 222

VW
SP 186
111 998 059

[03] **Supplied until depletion**
- Fornibile fino ad esaurimento delle scorte
- Fourni jusqu'à épuisement du stock
- Lieferbar solange vorrat reicht
- Suministrado hasta el stock termina

VW		
1500,1600 1.5	K	04/61 ⇨ 07/73
1500,1600 1.5 S	--	08/63 ⇨ 07/65
1500,1600 1.6 TL	T	08/65 ⇨ 07/73
KAEFER 1500 1.5	4SC20M150Q6	08/66 ⇨ 11/73

FACET 1.2534HDVS

1

CONTACT SETS

Adatt./Suitable: ***BOSCH***

ALFA ROMEO
700 220
140 20 05 011 00/01
60739126

BMW
12 11 1 243 843
12 11 1 267 391
12 11 1 267 393
12 11 1 354 502
12 11 1 359 705
12 11 1 359 873
12 11 1 360 648
12 11 1 361 760
12 11 8 730 024

BOSCH
1 237 013 044
9 232 081 044

DAF
163791
509890

FIAT
7073052
82305235

FORD
4 641 63
77HF-12107-AA

MERCEDES-BENZ
0001582890
0001583790
A 000 158 23 90
A 000 158 24 90
A 000 158 40 90
A 607 158 00 90

OPEL
12 16 011
16 12 011
16 12 385
RP 1 212 007

PEUGEOT
5927 50

PORSCHE
177 860 820 20
616 602 223 00

RENAULT
77 02 037 711

SAAB
78 66 353

SEAT
NG9 810 442 9

TOYOTA
19145-40010C

VOLVO
1306169
13061692
241664
2416642
243460
245664
2456642

VW
059 998 015
059 998 051
059 998 051 B
073 998 051
111 998 295
311 998 063
311 998 063 1

ALFA ROMEO		
ALFASUD 1.2	AR30102	06/72 ⇨ 09/84
ALFETTA 1.8	AR01608X	07/74 ⇨ 04/82
GIULIETTA I 1.3	AR01644	10/77 ⇨ 06/83
FIAT (BR)		
147 1.1	--	01/76 ⇨ 12/81
PREMIO	--	01/85 ⇨ 12/88
UNO 1.05	1.05	01/85 ⇨ 12/87
UNO 1.3	1.3	01/85 ⇨ 12/91
UNO 1.3 Furgoneta	1.3	01/85 ⇨ 12/91
UNO CS 1.3	1.3	01/85 ⇨ 12/91
FORD AUSTRALIA		
CORTINA 2.0	--	06/77 ⇨ 08/82
ESCORT 2.0	--	01/77 ⇨ 12/81
ESCORT 2.0 RS	--	01/77 ⇨ 12/81
HOLDEN		
COMMODORE 1.9	--	09/78 ⇨ 04/86
MERCEDES-BENZ		
CLASSE G I 230 G	M115.973	03/79 ⇨ 07/93
CLASSE G I 280 GE	M110.994	11/79 ⇨ 08/89
OPEL		
ASCONA C 1.3 N	13N	09/81 ⇨ 08/86
CORSA A 1.0	10S	09/82 ⇨ 03/93
CORSA A 1.2	12N, 12NC	09/82 ⇨ 08/90
CORSA A 1.2 N	12NC	01/85 ⇨ 10/87
KADETT B 1.1	11N	08/71 ⇨ 08/73
KADETT D 1.0	10N	09/79 ⇨ 08/82
KADETT E 1.2	12SC	09/84 ⇨ 07/86
MANTA B 1.3 N	13N	03/79 ⇨ 12/80
MANTA B 1.6 S	16S	09/75 ⇨ 12/81
MANTA B 1.9 N	19N	08/76 ⇨ 12/81
MANTA B 2.0	20N	08/77 ⇨ 12/80
PUCH		
G-MODELL 280 GE	M110.994	01/86 ⇨ 12/91
VOLKSWAGEN (BR)		
VWB 1.5	--	01/75 ⇨ 12/82
VOLVO		
240 1.8	B17A	11/78 ⇨ 07/85
VW		
JETTA II 1.6	EZ, HM	12/83 ⇨ 07/92
CADDY I 1.5	JB	08/82 ⇨ 07/83
CADDY I 1.6	EW, HN	01/83 ⇨ 07/92
GOLF II 1.6	EZ	08/83 ⇨ 07/92
GOLF II 1.6 [CHE] [SWE]	HM	08/83 ⇨ 07/85
LT I 2.4	DL	12/82 ⇨ 07/92
LT I 2.4 4WD	DL	12/82 ⇨ 07/92
LT I 2.4 i	1E	08/89 ⇨ 06/96
SCIROCCO I 1.1	FA	04/74 ⇨ 07/79
SCIROCCO I 1.5	JB	08/77 ⇨ 07/80
SCIROCCO II 1.6	1HyFAD	08/80 ⇨ 04/84

FACET 1.2540

1

CONTACT SETS

Adatt./Suitable: ***BOSCH***

BOSCH
1 237 013 057

GENERAL MOTORS
7 992 226
7 992 645

PEUGEOT
5927 30

RENAULT
77 01 200 876

VW
111 998 063

00 Eliminated on 28-09-2020. Please verify the availability through our local distributors

- Eliminato il 28-09-2020. Verificare la disponibilità presso i nostri distributori
- Eliminé le 28-09-2020. Verifier la disponibilité auprès de nos distributeurs sur place
- Am 28-09-2020 gestrichen. Evtl. Verfügbarkeit bitte bei unseren Händlern prüfen
- Eliminado en fecha 28-09-2020. Verificar la disponibilidad a través de nuestros distribuidores locales

PEUGEOT		
404 1.6	XC6	04/63 ⇨ 12/71
504 1.8	XM7	01/71 ⇨ 07/86
504 2.0	106(XN1)	03/71 ⇨ 07/86
504 2.0 TI	107(XN2)	01/71 ⇨ 06/83
505 1.8	105(XM7)	06/81 ⇨ 10/85
505 2.0	--, 106(XN1)	11/80 ⇨ 11/87
RENAULT		
4 1.1	688712, C1E714, C1E719	06/78 ⇨ 06/90
5 1.0	689710	01/72 ⇨ 12/85
5 1.3	810725, 810726	09/75 ⇨ 09/84
5 1.4	847725, C2J713	01/82 ⇨ 12/85
5 1.4 Automatik	847712	06/82 ⇨ 09/84
12 1.3	810.02, 810.05, 810.06, 810-02/97	10/69 ⇨ 08/80
12 1.3 TS	810.05, 810.06	08/72 ⇨ 08/80
18 1.4	847720, 847722	04/78 ⇨ 07/86
VW		
1500,1600 1.5 L	K	07/68 ⇨ 07/73
1500,1600 1.6 L	P	07/64 ⇨ 07/73
KAEFER 1.2	M51	01/54 ⇨ 07/65
KAEFER 1200 1.2	D	01/60 ⇨ 12/85
KAEFER 1300 1.3	AB, E, F	01/65 ⇨ 01/73
KAEFER 1302 1.2	D	08/69 ⇨ 08/72
KAEFER 1302 1.3	AB, AC	08/70 ⇨ 07/75
KAEFER 1302 1.6	AD, AE, AF, AH, AK	01/70 ⇨ 07/74
KAEFER 1302,1303 1.6	AD	07/70 ⇨ 06/79
VW		
KAEFER 1303 1.3	AB, AR	08/72 ⇨ 07/75
KAEFER 1303 1.6	AD, AE, AH, AK	08/70 ⇨ 12/79
KAEFER 1303 LS, S 1.6	AD, AJ, AS	08/72 ⇨ 12/79
KAEFER 1500 1.5	4SC20M150Q6	01/66 ⇨ 12/70
KAEFER 1500 1.6	AD	07/70 ⇨ 01/73

FACET 1.2547

1

CONTACT SETS

Adatt./Suitable: ***BOSCH***

BOSCH
1 237 013 000

FORD
1 154 411 5
G 509 193

GENERAL MOTORS
7 992 219
7 992 658

OPEL
16 12 005
RP121201

PORSCHE
616 602 226 02
901 602 960 03

VOLVO
240149
2401495

VW
SP 181
111 998 051

00 Eliminated on 26-10-2021. Please verify the availability through our local distributors

- Eliminato il 26-10-2021. Verificare la disponibilità presso i nostri distributori
- Eliminé le 26-10-2021. Verifier la disponibilité auprès de nos distributeurs sur place
- Am 26-10-2021 gestrichen. Evtl. Verfügbarkeit bitte bei unseren Händlern prüfen
- Eliminado en fecha 26-10-2021. Verificar la disponibilidad a través de nuestros distribuidores locales

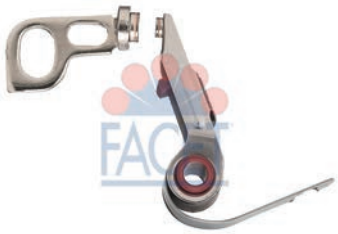

ALFA ROMEO		
1750-2000 1.7	AR10525	04/68 ⇨ 11/71
1750-2000 1750	AR00548	03/68 ⇨ 10/72
GIULIA 1600 Super	AR00526	06/64 ⇨ 08/69
GT 1.8	AR10525	04/68 ⇨ 11/71
GT 1300 Junior	AR00530	01/66 ⇨ 12/77
GT V 1750	AR00548	01/67 ⇨ 12/72
SPIDER I 1.7	AR10525	04/68 ⇨ 11/71
SPIDER I 1300	AR00530	01/68 ⇨ 12/77
SPIDER I 1600	AR00526, AR00536, AR01600	03/66 ⇨ 12/68
SPIDER I 1750	AR00548	01/67 ⇨ 12/71
PORSCHE		
356 A 1600	--	01/55 ⇨ 12/59
356 A 1600 GS Carrera	--	01/55 ⇨ 12/61
356 A 1600 S	616.15	01/55 ⇨ 12/59
356 A 1600 Super	616.15	01/55 ⇨ 12/59
356 B 1600	--	09/59 ⇨ 08/63
356 B 1600 Super 75	616.15	01/59 ⇨ 12/63
356 B 1600 Super 90	--	01/59 ⇨ 12/63
356 C 1600	616.15	01/63 ⇨ 12/65
356 C 1600 SC	--	01/63 ⇨ 12/65
911 I 2.0 L	--	08/67 ⇨ 11/68
911 I 2.0 S	901.02, 901.08, 901.10	07/66 ⇨ 02/72
912 1.6	616.36, 616.39, 616.40	01/65 ⇨ 02/70
VOLVO		
140 1.8 S	B18B	08/66 ⇨ 01/72
P 122 S AMAZON 1.8	B18, B18D	08/61 ⇨ 05/71
P 1800 1.8	--, B18A	04/62 ⇨ 05/70
P 1800 1.8 S	--	04/62 ⇨ 05/70
P 2200 1.8	B18A, B18B, B18D	09/64 ⇨ 08/67

FACET 1.2549HDVS

1

CONTACT SETS

Adatt./Suitable: ***BOSCH***

BMW
12 11 1 267 394
12 11 1 354 584
12 11 1 356 919

BOSCH
1 237 013 052

FIAT
00009049
38326146
638326146
82289883
AXE2055

FORD
0 464 163
0 548 495
1 154 849 5
1 568 737
1 584 304
1 584 305
5 018 844
5 019 831
5 484 95
6 138 918
77BF-12107-AA
77BF-12171-AA

MAN
51.26310-0003

MERCEDES-BENZ
0001582790
A 000 158 22 90
A 000 158 31 90

OPEL
16 12 433

PEUGEOT
5927 65

PORSCHE
901 602 960 00

RENAULT
77 01 012 533

SAAB
83 55 919
93 59 597

VOLVO
241652
2416527

VW
036 998 051
036 998 051 A
036 998 051 C
036 998 051 D
052 998 051
052 998 051 D

FORD		
ESCORT III 1.1	GSE	08/83 ⇨ 12/85
FIESTA I 0.9	TKA, TKW, TLA	05/76 ⇨ 08/83
FIESTA I 1.1	GLA, GLW	05/76 ⇨ 08/83
FIESTA II 1.1	GLC, GSF	09/83 ⇨ 02/89
TRANSIT II 1.6	LAC, LAT	09/85 ⇨ 09/92
TRANSIT II 2.0	NAT, NAV, NAW	09/85 ⇨ 09/92
TRANSIT II 2.0 L	NAW, NAX	10/85 ⇨ 03/91
INNOCENTI		
MINI 120	--	01/75 ⇨ 12/83
NISSAN		
200 B [AUS]	--	01/78 ⇨ 12/81
OPEL		
KADETT D 1.3 S	13S	08/79 ⇨ 08/84
VOLVO		
240 2.0	0JX4G20A6L	08/74 ⇨ 07/76
VW		
POLO II 1.0	GL	10/81 ⇨ 10/86
POLO II 1.1	HB	10/81 ⇨ 09/89
POLO II 1.3	GT, HH, HJ, HK, HW	10/81 ⇨ 07/88
JETTA II 1.3	GT, HK	01/84 ⇨ 06/87
DERBY 1.0	GL	10/81 ⇨ 12/84
DERBY 1.1	HB	02/77 ⇨ 09/81
DERBY 1.3	HH	02/77 ⇨ 09/81
GOLF I 1.3	HK	08/83 ⇨ 07/86
GOLF II 1.0	GN	11/83 ⇨ 08/85
GOLF II 1.3	GT, HK	08/83 ⇨ 06/87
SCIROCCO I 1.3	GF	08/79 ⇨ 07/80
SCIROCCO II 1.3	HK	08/83 ⇨ 07/84

FACET 1.2560

1

CONTACT SETS

Adatt./Suitable: ***BOSCH***

BOSCH
1 217 013 001

[03] **Supplied until depletion**
- Fornibile fino ad esaurimento delle scorte
- Fourni jusqu'à épuisement du stock
- Lieferbar solange vorrat reicht
- Suministrado hasta el stock termina

FACET 1.2562

1

CONTACT SETS

Adatt./Suitable: ***BOSCH***

BMW
12 11 1 267 392
12 11 1 271 687
12 11 1 355 624

BOSCH
1 237 013 075

GENERAL MOTORS
7 992 344

MERCEDES-BENZ
A 000 158 28 90
A 000 158 35 90
A 000 158 37 90
A 000 158 39 90

VOLVO
243801
2438018

VW
058 998 051
058 998 051 A
058 998 051 B

[03] **Supplied until depletion**
- Fornibile fino ad esaurimento delle scorte
- Fourni jusqu'à épuisement du stock
- Lieferbar solange vorrat reicht
- Suministrado hasta el stock termina

BMW		
3 I 320 i	18F209	06/75 ⇨ 08/82
2500-3.3 3.0 S	M30B30	05/71 ⇨ 04/77
MERCEDES-BENZ		
/8 280	M110.921	06/72 ⇨ 11/76
/8 280 C	M110.921	06/72 ⇨ 02/77
/8 280 CE	M110.981	06/72 ⇨ 01/77
/8 280 E	M110.981	06/72 ⇨ 11/76
PORSCHE		
911 I 2.7	911.41, 911.43, 911.46, 911.48, 911.81, 911.82, 911.84, 911.85, 911.86, 911.89, 911.90, 911.92, 911.94, 911.97, 911.99	09/73 ⇨ 06/77
911 I 2.7 S	911.42, 911.47, 911.93, 911.98	08/73 ⇨ 01/76
911 I 2.7 S Carrera	911.42, 911.47, 911.93, 911.98	08/73 ⇨ 01/76
911 I 2.7 SC Carrera RS	911.83	08/72 ⇨ 01/79

FACET 1.2564

1

CONTACT SETS

Adatt./Suitable: ***BOSCH***

BOSCH
1 217 013 009

[00] **Eliminated on 06-07-2021. Please verify the availability through our local distributors**
- Eliminato il 06-07-2021. Verificare la disponibilità presso i nostri distributori
- Eliminé le 06-07-2021. Verifier la disponibilité auprès de nos distributeurs sur place
- Am 06-07-2021 gestrichen. Evtl. Verfügbarkeit bitte bei unseren Händlern prüfen
- Eliminado en fecha 06-07-2021. Verificar la disponibilidad a través de nuestros distribuidores locales

FACET 1.2568

1

CONTACT SETS

Adatt./Suitable: ***BOSCH***

BOSCH
1 217 013 021

FACET 1.2571

1

CONTACT SETS

Adatt./Suitable: ***BOSCH***

MOTO GUZZI
77 900 507 97

[03] **Supplied until depletion**
- Fornibile fino ad esaurimento delle scorte
- Fourni jusqu'à épuisement du stock
- Lieferbar solange vorrat reicht
- Suministrado hasta el stock termina

FACET 1.2583

1

CONTACT SETS

Adatt./Suitable: ***BOSCH***

BOSCH
1 217 013 020

[03] **Supplied until depletion**
- Fornibile fino ad esaurimento delle scorte
- Fourni jusqu'à épuisement du stock
- Lieferbar solange vorrat reicht
- Suministrado hasta el stock termina

FACET 1.2805/1

1

CONTACT SETS

Adatt./Suitable: ***CAJAVEC***

CAJAVEC
5247810

ZASTAVA
46600861

ZASTAVA		
101 1.1	128A.000	06/73 ⇨ 01/90
YUGO 0.9	9A	04/80 ⇨ 06/92

FACET 1.3246

1

CONTACT SETS

Adatt./Suitable: ***DANSI***

MOTO GUZZI
19 709 620

FACET 1.3455HDVS

1

CONTACT SETS

Adatt./Suitable: ***DELCO REMY***

DELCO REMY
3 470 026

GENERAL MOTORS
03 470 026
3 470 026
90 010 696

OPEL
12 12 154
16 12 229
RP 1 212 154

VOLVO
3277840
32778409

[03] **Supplied until depletion**
- Fornibile fino ad esaurimento delle scorte
- Fourni jusqu'à épuisement du stock
- Lieferbar solange vorrat reicht
- Suministrado hasta el stock termina

OPEL		
CORSA A 1.0	10S	09/82 ⇨ 03/93
KADETT B 1.1	11N	08/71 ⇨ 08/73
KADETT D 1.0	10N	09/79 ⇨ 08/82
KADETT E 1.2	12SC	09/84 ⇨ 07/86

FACET 1.3511HDV

1

CONTACT SETS

Adatt./Suitable: ***DENSO***

DAIHATSU
02935-00200
19145-26060-000
19145-87203-000
19145-87206-000
19145-87701
19145-87701-000
99329-35902

FIAT
553221203
6553202203
6553221203

HOLDEN
3314074010

SUZUKI
33140-74010
33140-74010-000

TOYOTA
04191-41010
19145-26060
19145-38011
19145-40010
19145-41010
19145-41020
19145-41030
19145-87701

VW
J19 145 260 60

[*F] **Available contact set only-not plate**
- Fornibile solo contatto, no piastra
- Disponible rupteur seul, pas le plateau
- Erhältlich nur unterbrecher, nicht die platte
- Disponible el platino solo, no la plancha

DAIHATSU		
850 0.8	--	07/86 ⇨ 12/89
1000 1.0	CB10	07/86 ⇨ 12/89
CHARADE III 1.0	CB23, CB22	03/87 ⇨ 02/93
FEROZA 1.6i	--	01/84 ⇨ 12/89
HIJET I 1.0	CB	06/86 ⇨ 12/89
HOLDEN		
SCURRY_NB 1.0	F10A	10/85 ⇨ 05/86
INNOCENTI		
500 L; LS	--	⇨ 12/86
SMALL 990	--	07/90 ⇨ 12/92
MARUTI		
800 0.8	F8B	01/91 ⇨ 12/06
SUZUKI		
ALTO I 0.8	F8A, F8B	06/82 ⇨ 08/84
SJ410 1.0	F10A	09/81 ⇨ 07/91
SUPER CARRY 1.0	F10A	10/85 ⇨ 03/99

VW		
TARO 1.8	2Y	04/89 ⇨ 09/94
TARO 2.2	4Y	06/89 ⇨ 07/94
TARO 2.2 4x4	4Y	06/89 ⇨ 07/94

FACET 1.3522HDV

1

CONTACT SETS

Adatt./Suitable: ***DENSO***

DAIHATSU
19103-87204-000
19145-87204-000
19145-87205-000

FIAT
6553206203

GENERAL MOTORS
93 150 904
94 208 408

ISUZU
8-94208403-0
8-94208408-0

SUBARU
39146-4302
39146-4312

TOYOTA
19145-10020
19145-14010
98989-01161

[03] **Supplied until depletion**
- Fornibile fino ad esaurimento delle scorte
- Fourni jusqu'à épuisement du stock
- Lieferbar solange vorrat reicht
- Suministrado hasta el stock termina

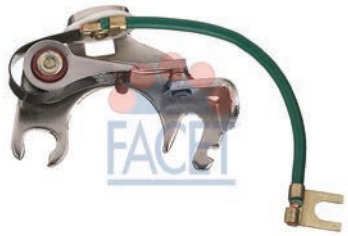

INNOCENTI		
SMALL 500	--	07/90 ⇨ 12/92
SUBARU		
L-SERIES 1.3	--	01/87 ⇨ 12/91
M60 600	--	01/88 ⇨ 12/89
M70 700	--	01/88 ⇨ 12/89

FACET 1.3655

1

CONTACT SETS

Adatt./Suitable: ***DUCELLIER***

ALFA ROMEO
116 55 05 011 03/02
60730445

CHRYSLER
83 300 134

CITROËN
54 524 22G
DM 211-17

DUCELLIER
71 133
608 012
618 701

FIAT
9916118

PEUGEOT
5927 09

RENAULT
08 54 137 800

VOLVO
3100134
31001340
3267443
32674434

DACIA		
1210 1.2	--	01/69 ⇨
1310 1.3	810-02/-99	05/83 ⇨ 07/04
1410 1.4	--	01/69 ⇨
FIAT		
242 1.6	124B3.000	10/75 ⇨ 07/82

PEUGEOT		
504 1.8 Injection	KF5, KF6	07/68 ⇨ 02/71
RENAULT		
4 0.8	800705	10/83 ⇨ 10/88

FACET 1.3656

1

CONTACT SETS

Adatt./Suitable: ***DUCELLIER***

CITROËN
54 463 39M
DUCELLIER
71 129
FIAT
9919038
9919040
9921039
GENERAL MOTORS
7 992 668
LEYLAND
GCS160
RENAULT
08 54 954 600

[00] **Eliminated on 15-01-2020. Please verify the availability through our local distributors**

- Eliminato il 15-01-2020. Verificare la disponibilità presso i nostri distributori
- Eliminé le 15-01-2020. Verifier la disponibilité auprès de nos distributeurs sur place
- Am 15-01-2020 gestrichen. Evtl. Verfügbarkeit bitte bei unseren Händlern prüfen
- Eliminado en fecha 15-01-2020. Verificar la disponibilidad a través de nuestros distribuidores locales

FIAT		
124 1200	124A.000	07/66 ⇨ 10/73
124 1400 Special	124B2.000	12/68 ⇨ 12/72
124 1600 Special T	132AC.000	01/73 ⇨ 07/75
850 0.8	100G.000	07/64 ⇨ 10/72

FACET 1.3656HDV

1

CONTACT SETS

Adatt./Suitable: ***DUCELLIER***

[00] **Eliminated on 15-01-2020. Please verify the availability through our local distributors**

- Eliminato il 15-01-2020. Verificare la disponibilità presso i nostri distributori
- Eliminé le 15-01-2020. Verifier la disponibilité auprès de nos distributeurs sur place
- Am 15-01-2020 gestrichen. Evtl. Verfügbarkeit bitte bei unseren Händlern prüfen
- Eliminado en fecha 15-01-2020. Verificar la disponibilidad a través de nuestros distribuidores locales

FIAT		
128 1.1	128A.000	03/69 ⇨ 12/84
131 1.3 Mirafiori	131A6.000	10/74 ⇨ 09/81
132 1.6	132C.000	05/77 ⇨ 09/82

FIAT		
FIORINO I 900	100GL.000	10/77 ⇨ 10/86

FACET 1.3661

1

CONTACT SETS

Adatt./Suitable: ***DUCELLIER***

DUCELLIER
71 974
GENERAL MOTORS
7 992 228
RENAULT
08 54 725 600

[03] **Supplied until depletion**

- Fornibile fino ad esaurimento delle scorte
- Fourni jusqu'à épuisement du stock
- Lieferbar solange vorrat reicht
- Suministrado hasta el stock termina

RENAULT		
4 0.8	80001	09/71 ⇨ 12/88
5 1.3	810719	06/79 ⇨ 09/84

FACET 1.3664

1

CONTACT SETS

Adatt./Suitable: ***DUCELLIER***

CITROËN
54 747 41
AZ 211-17
DUCELLIER
23 263

CITROËN		
2 CV 6	A06/635, A06/664	02/70 ⇨ 10/85
ACADIANE 6	M28(AM2)	08/78 ⇨ 10/88
DYANE 4	A79/1(AYA2)	04/68 ⇨ 07/75
MEHARI 0.6	M28/1(AK2)	05/68 ⇨ 10/79

FACET 1.3667

1

CONTACT SETS

Adatt./Suitable: ***DUCELLIER***

DUCELLIER
608 640

[00] **Eliminated on 18-02-2022. Please verify the availability through our local distributors**

- Eliminato il 18-02-2022. Verificare la disponibilità presso i nostri distributori
- Eliminé le 18-02-2022. Verifier la disponibilité auprès de nos distributeurs sur place
- Am 18-02-2022 gestrichen. Evtl. Verfügbarkeit bitte bei unseren Händlern prüfen
- Eliminado en fecha 18-02-2022. Verificar la disponibilidad a través de nuestros distribuidores locales

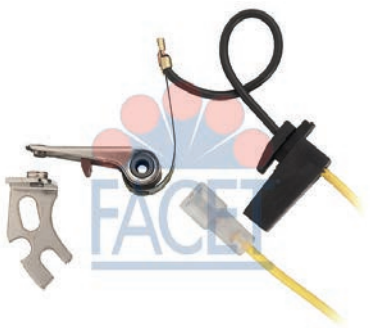

L = mm
700

FACET 1.3676 — 1

CONTACT SETS

Adatt./Suitable: ***DUCELLIER***

CITROËN
79 015 927 44
DUCELLIER
618 015
GENERAL MOTORS
7 992 346
PEUGEOT
5927 43
5927 44

[00] **Eliminated on 18-02-2022. Please verify the availability through our local distributors**

- Eliminato il 18-02-2022. Verificare la disponibilità presso i nostri distributori
- Eliminé le 18-02-2022. Verifier la disponibilité auprès de nos distributeurs sur place
- Am 18-02-2022 gestrichen. Evtl. Verfügbarkeit bitte bei unseren Händlern prüfen
- Eliminado en fecha 18-02-2022. Verificar la disponibilidad a través de nuestros distribuidores locales

L = mm
260

PEUGEOT		
104 0.9	108(XV3), 108(XV5)	10/72 ⇨ 10/83
104 1.1	109(XW3)	07/76 ⇨ 06/83

FACET 1.3686 — 1

CONTACT SETS

Adatt./Suitable: ***DUCELLIER***

CHRYSLER
83 300 133
CITROËN
95 534 913
DUCELLIER
582 018
GENERAL MOTORS
93 150 077
RENAULT
77 01 200 739

[03] **Supplied until depletion**

- Fornibile fino ad esaurimento delle scorte
- Fourni jusqu'à épuisement du stock
- Lieferbar solange vorrat reicht
- Suministrado hasta el stock termina

RENAULT		
5 1.3	810726	09/76 ⇨ 09/79
20 2.0	829700, 829701, 829702, 829703, 829.01	10/77 ⇨ 12/83

FACET 1.3691/1 — 1

CONTACT SETS

Adatt./Suitable: ***DUCELLIER***

DUCELLIER
618 642
618 765
FIAT
9935150

[03] **Supplied until depletion**

- Fornibile fino ad esaurimento delle scorte
- Fourni jusqu'à épuisement du stock
- Lieferbar solange vorrat reicht
- Suministrado hasta el stock termina

DACIA		
ARO 10	--	01/72 ⇨ 12/80
FIAT		
127 0.9	100GL.048	06/71 ⇨ 05/83
LANCIA		
A 112 0.9 Junior	A112A5.000	03/81 ⇨ 06/86

FACET 1.3691/2 — 1

CONTACT SETS

Adatt./Suitable: ***DUCELLIER***

DUCELLIER
582 130
PEUGEOT
5927 73

[00] **Eliminated on 14-04-2020. Please verify the availability through our local distributors**

- Eliminato il 14-04-2020. Verificare la disponibilità presso i nostri distributori
- Eliminé le 14-04-2020. Verifier la disponibilité auprès de nos distributeurs sur place
- Am 14-04-2020 gestrichen. Evtl. Verfügbarkeit bitte bei unseren Händlern prüfen
- Eliminado en fecha 14-04-2020. Verificar la disponibilidad a través de nuestros distribuidores locales

L = mm
240

PEUGEOT		
305 1.5	117(XR5S)	05/80 ⇨ 09/82

FACET 1.3691/3 — 1

CONTACT SETS

Adatt./Suitable: ***DUCELLIER***

CITROËN
79 015 927 83
DUCELLIER
582 133
PEUGEOT
5927 83
5927 96

[00] **Eliminated on 22-02-2021. Please verify the availability through our local distributors**

- Eliminato il 22-02-2021. Verificare la disponibilità presso i nostri distributori
- Eliminé le 22-02-2021. Verifier la disponibilité auprès de nos distributeurs sur place
- Am 22-02-2021 gestrichen. Evtl. Verfügbarkeit bitte bei unseren Händlern prüfen
- Eliminado en fecha 22-02-2021. Verificar la disponibilidad a través de nuestros distribuidores locales

L = mm
250

PEUGEOT		
104 0.9	108(XV5)	10/79 ⇨ 10/83
TALBOT		
SAMBA 1.1	XW7	01/81 ⇨ 06/86

FACET 1.3691/5

1

CONTACT SETS

Adatt./Suitable: ***DUCELLIER***

DUCELLIER
582 156
FIAT
9937709
PEUGEOT
5927 92

[03] **Supplied until depletion**
- Fornibile fino ad esaurimento delle scorte
- Fourni jusqu'à épuisement du stock
- Lieferbar solange vorrat reicht
- Suministrado hasta el stock termina

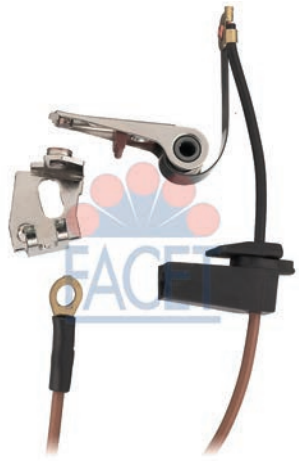

L = mm
650

FIAT		
DUCATO I 1.8	169B	01/82 ⇨ 12/88
PEUGEOT		
505 1.8	105(XM7)	06/81 ⇨ 10/85
J9 1.6	XC7P	03/80 ⇨ 06/87

FACET 1.3691/6

1

CONTACT SETS

Adatt./Suitable: ***DUCELLIER***

DUCELLIER
582 186
582 191
582 199
FIAT
9936677

[03] **Supplied until depletion**
- Fornibile fino ad esaurimento delle scorte
- Fourni jusqu'à épuisement du stock
- Lieferbar solange vorrat reicht
- Suministrado hasta el stock termina

L = mm
200

FIAT		
PANDA I 800	100GL6.000	02/81 ⇨ 12/85
RITMO I 1.3	149A3.000	11/83 ⇨ 08/85
RITMO II 75 1.5	138A2.000	09/85 ⇨ 12/88
SEAT		
PANDA 34 850	--	01/80 ⇨ 12/83
PANDA 35 850	--	01/80 ⇨ 12/83

FACET 1.3691/11U

1

CONTACT SETS

Adatt./Suitable: ***DUCELLIER***

DUCELLIER
608 514

[00] **Eliminated on 18-02-2022. Please verify the availability through our local distributors**
- Eliminato il 18-02-2022. Verificare la disponibilità presso i nostri distributori
- Eliminé le 18-02-2022. Verifier la disponibilité auprès de nos distributeurs sur place
- Am 18-02-2022 gestrichen. Evtl. Verfügbarkeit bitte bei unseren Händlern prüfen
- Eliminado en fecha 18-02-2022. Verificar la disponibilidad a través de nuestros distribuidores locales

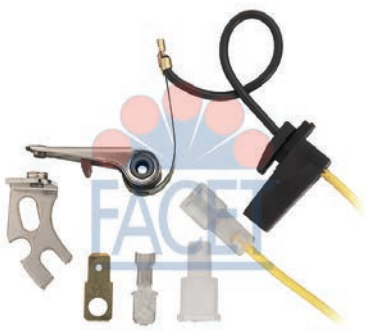

PEUGEOT		
204 1.1	XK, XK4, XK5	10/65 ⇨ 07/77
204 1.1 Grand Luxe	XK4	05/69 ⇨ 10/77
PEUGEOT		
504 1.8	XM7	01/71 ⇨ 07/86
TALBOT		
MATRA BAGHEERA 1.3	3G4	01/74 ⇨ 03/78

FACET 1.3691/12U

1

CONTACT SETS

Adatt./Suitable: ***DUCELLIER***

DUCELLIER
608 719
PEUGEOT
5927 35

[00] **Eliminated on 22-02-2021. Please verify the availability through our local distributors**
- Eliminato il 22-02-2021. Verificare la disponibilità presso i nostri distributori
- Eliminé le 22-02-2021. Verifier la disponibilité auprès de nos distributeurs sur place
- Am 22-02-2021 gestrichen. Evtl. Verfügbarkeit bitte bei unseren Händlern prüfen
- Eliminado en fecha 22-02-2021. Verificar la disponibilidad a través de nuestros distribuidores locales

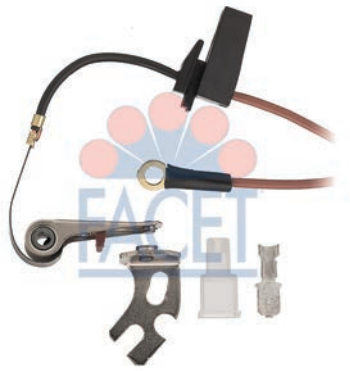

FACET 1.3691/22

1

CONTACT SETS

Adatt./Suitable: ***DUCELLIER***

DUCELLIER
582 309
FIAT
9938573

L = mm
215

FIAT		
PANDA I 750	141B.000	01/86 ⇨ 01/95
PANDA I 900	100GL3.000	10/80 ⇨ 06/94
PANDA I 900 CL	146A.048	01/86 ⇨ 04/91
UNO 45 0.9	146A.000, 146A1.000	03/83 ⇨ 07/96
UNO 45 0.9 Trend	146A.048	09/89 ⇨ 09/92

FACET 1.3691/26 — 3

CONTACT SETS

Adatt./Suitable: ***DUCELLIER***

DUCELLIER
582 482 *P
2 590 166 *P

RENAULT
77 01 031 149 *P
77 01 032 418 *P

*P **Kit Condenser - Contact set**
- Kit Condensatore - Contatto
- Kit Condensateur - Rupteur
- Bausatz Kondensator - unterbrecher
- Juego Condensador - Platino

03 **Supplied until depletion**
- Fornibile fino ad esaurimento delle scorte
- Fourni jusqu'à épuisement du stock
- Lieferbar solange vorrat reicht
- Suministrado hasta el stock termina

Ø = mm	h = mm	µF
17	38,5	0,23

RENAULT		
9 1.1	C1E715	09/81 ⇨ 05/87
9 1.2	C1G700, C1G710	09/85 ⇨ 12/88
11 1.1	C1E715, C1E720	03/83 ⇨ 06/86
11 1.2	C1G700, C1G710	10/84 ⇨ 12/88
19 I 1.4	C1J	01/89 ⇨ 12/92
CLIO I 1.1	C1E700	01/91 ⇨ 09/98
EXPRESS 955	C1C	01/85 ⇨ 10/90

FACET 1.3691/27 — 3

CONTACT SETS

Adatt./Suitable: ***DUCELLIER***

RENAULT
77 01 031 411 *P

*P **Kit Condenser - Contact set**
- Kit Condensatore - Contatto
- Kit Condensateur - Rupteur
- Bausatz Kondensator - unterbrecher
- Juego Condensador - Platino

03 **Supplied until depletion**
- Fornibile fino ad esaurimento delle scorte
- Fourni jusqu'à épuisement du stock
- Lieferbar solange vorrat reicht
- Suministrado hasta el stock termina

Ø = mm	h = mm	µF
17	38,5	0,23

RENAULT		
EXPRESS 1.1	C1E	01/85 ⇨ 10/90

FACET 1.3720 — 1

CONTACT SETS

Adatt./Suitable: ***FEMSA***

FEMSA
23373- 1

FIAT
9936823

SEAT
NG0 020 010 6
SE 127914.006A

FIAT		
127 0.9	100GL.048	06/71 ⇨ 05/83
131 1.3 Mirafiori	131A6.000	10/74 ⇨ 09/81
132 1.6	132C.000	05/77 ⇨ 09/82
PANDA I 800	100GL6.000	02/81 ⇨ 12/85

SEAT		
FURA 0.9	100GL3000	01/82 ⇨ 06/86
MARBELLA 0.8	5K9K718	08/86 ⇨ 12/93
PANDA 34 850	--	01/80 ⇨ 12/83
PANDA 35 850	--	01/80 ⇨ 12/83

FACET 1.3724 — 1

CONTACT SETS

Adatt./Suitable: ***FEMSA***

FEMSA
33924- 2

LAND ROVER
00000A00071

RENAULT
77 02 124 314

00 **Eliminated on 12-04-2021. Please verify the availability through our local distributors**
- Eliminato il 12-04-2021. Verificare la disponibilità presso i nostri distributori
- Eliminé le 12-04-2021. Verifier la disponibilité auprès de nos distributeurs sur place
- Am 12-04-2021 gestrichen. Evtl. Verfügbarkeit bitte bei unseren Händlern prüfen
- Eliminado en fecha 12-04-2021. Verificar la disponibilidad a través de nuestros distribuidores locales

RENAULT		
4 0.8	80001	09/71 ⇨ 12/88

FACET 1.3726 — 1

CONTACT SETS

Adatt./Suitable: ***FEMSA***

FEMSA
33924- 4

RENAULT
77 02 163 081

03 **Supplied until depletion**
- Fornibile fino ad esaurimento delle scorte
- Fourni jusqu'à épuisement du stock
- Lieferbar solange vorrat reicht
- Suministrado hasta el stock termina

RENAULT		
4 1.1	688712	02/78 ⇨ 06/90
9 1.2	C1G700, C1G710	09/85 ⇨ 12/88
11 1.2	C1G700, C1G710	10/84 ⇨ 12/88
11 1.7	F2N700	10/83 ⇨ 12/87
EXPRESS 1.1	C1E	01/85 ⇨ 10/90
EXPRESS 955	C1C	01/85 ⇨ 10/90

FACET 1.4143HDV

1

CONTACT SETS

Adatt./Suitable: ***FORD***

FORD
1 458 944
681F-12107-AA
C3DF-12171-A
C3DZ-12171-A
C5AZ-12171-A
C6AH-12171-A

Motorcraft
EDP 1

[03] **Supplied until depletion**
- Fornibile fino ad esaurimento delle scorte
- Fourni jusqu'à épuisement du stock
- Lieferbar solange vorrat reicht
- Suministrado hasta el stock termina

FORD		
CORTINA 1300	KL13H	10/70 ⇨ 03/72
FIESTA I 0.9	TKA, TKW, TLA	05/76 ⇨ 08/83
FIESTA I 1.3	J3E	08/77 ⇨ 08/83

FACET 1.4144HDV

1

CONTACT SETS

Adatt./Suitable: ***FORD***

FORD
1 458 945
5 027 482
6 234 60
682F-12107-AA
920X-12107-BA
C6CH-12171-A

GENERAL MOTORS
7 992 202

Motorcraft
EDP 2

[03] **Supplied until depletion**
- Fornibile fino ad esaurimento delle scorte
- Fourni jusqu'à épuisement du stock
- Lieferbar solange vorrat reicht
- Suministrado hasta el stock termina

FORD		
TAUNUS 1.6	LCJ	07/79 ⇨ 07/82
TRANSIT I 1.6	4RB	11/77 ⇨ 10/86
TRANSIT I 2.0	4RC	11/77 ⇨ 07/82

FACET 1.4456HDV

1

CONTACT SETS

Adatt./Suitable:

BOSCH
1 987 231 004
1 987 231 904
F 005 X04 543

DAIHATSU
19145-87301

FORD
A720-X12171-EA
A730-X12171-BA

GENERAL MOTORS
7 992 340
94 022 297

HITACHI
4461-13301
44613330
4461-3330 A
4461-4330 AY
44A5-13301
44A513301Z
44AZ-13301

HOLDEN
GH203

HONDA
30105-590-075
30105-634-005
30105-634-0051
30105-657-005
30105-679-005
33105-590-075

ISUZU
2-23115-15
8-23115-14
8-23115-15
9-40222-97
9-82311515-0
9-82311518-0

Motorcraft
ADP 5007

NISSAN
22145-18005
22145-71301
22145-78506
22145-U6001
22145-U6002

SUBARU
49146-7011
89146-4111
89146-4821

[03] **Supplied until depletion**
- Fornibile fino ad esaurimento delle scorte
- Fourni jusqu'à épuisement du stock
- Lieferbar solange vorrat reicht
- Suministrado hasta el stock termina

HOLDEN		
ASTRA_LB 1.5	E15	08/84 ⇨ 01/86
NISSAN		
PATROL III 2.8	L28	07/80 ⇨ 08/88
SUBARU		
L-SERIES 1.3	--	01/79 ⇨ 12/87

FACET 1.4593

1

CONTACT SETS

Adatt./Suitable: ***LOMBARDINI***

FACET 1.4683MHDV

1

CONTACT SETS

Adatt./Suitable: ***LUCAS***

FIAT
31322118
631322118

FORD
EOTA 12 160
EOTA 12 162 C
EOTA 12 199 C

LAND ROVER
269987
RTC3270
RTC3313
RTC3881

Motorcraft
ADP 1

ASTON MARTIN		
DB6 4.0	--, AJ6	10/64 ⇨ 12/70
AUSTIN		
1000-SERIES 1100	--	01/70 ⇨ 12/74
1000-SERIES 1300	--	01/70 ⇨ 12/74
1000-SERIES 1300 GT	--	01/70 ⇨ 12/74
ALLEGRO 1.3	12H	05/73 ⇨ 03/82
ALLEGRO 1.5 Super	14H	05/73 ⇨ 03/82
MAXI 1500	--, 14H	04/69 ⇨ 07/80
MAXI 1750	17H	04/69 ⇨ 10/80
MAXI 1750 HL	--, 17LA	10/72 ⇨ 10/80
MINI 1000	99H	10/67 ⇨ 09/84
MINI 1275 GT	12H	10/69 ⇨ 08/80
FORD		
CORTINA 1200	--	10/62 ⇨ 09/66
CORTINA 1500	--	10/62 ⇨ 09/66
CORTINA GT	--	10/62 ⇨ 09/66
JAGUAR		
E-TYPE 4.2	XK4.2(82-87)	05/64 ⇨ 09/70
II 240	--	09/59 ⇨ 10/69
II 340	--	09/55 ⇨ 10/70
LAND ROVER		
88/109 2.3 4x4	10H, 11H	09/61 ⇨ 12/86
MG		
MAGNETTE 1.6	--	03/61 ⇨ 09/68
MGB 1.8	--	05/62 ⇨ 12/80
MGB GT 1.8	--, 18G	07/65 ⇨ 11/80
MORRIS		
MARINA 1.8	--	04/71 ⇨ 12/79
MARINA 1.8 TC	--	04/71 ⇨ 09/75
MARINA 1300	--	04/71 ⇨ 06/80
MARINA 1800	--	04/71 ⇨ 12/75
MARINA 1800 TC	--	04/71 ⇨ 12/75
ROVER		
2000-3500 2200	--	10/73 ⇨ 05/76
A60 CAMBRIDGE 1.7	--	01/62 ⇨ 10/69
TRIUMPH		
HERALD 1200	--, AJM	01/61 ⇨ 10/67
TR 6 2.5	CF1	01/72 ⇨ 12/76
WOLSELEY		
HORNET 1.0	--, 99LFD	01/61 ⇨ 12/70

FACET 1.4689

1

CONTACT SETS

Adatt./Suitable: ***LUCAS***

FORD
6 087 381
81SF-12171-CA
JAGUAR
JLM 9522
LAND ROVER
RTC3282
RTC5946
RTC5947
RTC6627
RENAULT
77 01 025 238
ROVER
GCS124
RTC6627

[00] **Eliminated on 28-07-2021. Please verify the availability through our local distributors**

- Eliminato il 28-07-2021. Verificare la disponibilità presso i nostri distributori
- Eliminé le 28-07-2021. Verifier la disponibilité auprès de nos distributeurs sur place
- Am 28-07-2021 gestrichen. Evtl. Verfügbarkeit bitte bei unseren Händlern prüfen
- Eliminado en fecha 28-07-2021. Verificar la disponibilidad a través de nuestros distribuidores locales

[221] **Replaces old code ..."HDV"**

- Sostituisce vecchio codice ..."HDV"
- Remplace l'ancien modèle ..."HDV"
- Ersetzt alten Artikel ..."HDV"
- Sustituye el precedente modelo ..."HDV"

JAGUAR		
XJ 3.4 Series 3	--	01/86 ⇨ 12/94
LAND ROVER		
90 2.5 4x4	17H	09/85 ⇨ 08/90
110/127 2.5 4x4	17H	10/85 ⇨ 07/90
DEFENDER 2.25	--	01/87 ⇨
DEFENDER 2.5 90, 110	--	08/90 ⇨ 09/01
ROVER		
MINI 1.0	--	01/85 ⇨

FACET 1.4896

1

CONTACT SETS

Adatt./Suitable: ***MARELLI***

MAGNETI MARELLI
718 098 01

[03] **Supplied until depletion**

- Fornibile fino ad esaurimento delle scorte
- Fourni jusqu'à épuisement du stock
- Lieferbar solange vorrat reicht
- Suministrado hasta el stock termina

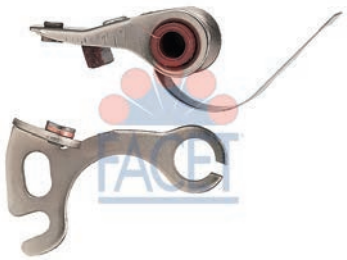

FACET 1.4920

1

CONTACT SETS

Adatt./Suitable: ***MARELLI***

FIAT
9903324
9909413
9911552
MAGNETI MARELLI
710 067 01
MOTO GUZZI
12 715 445
SEATT
007083.06

FIAT		
126 600	126A.000	09/72 ⇨ 06/77
500 0.5	110F.000, 120.000	01/60 ⇨ 12/75
500 0.6	111A000	08/68 ⇨ 01/76
600 0.6	--	03/55 ⇨ 05/61
PANDA I 650	141A.000	01/82 ⇨ 07/04
FSO		
126P 0.6	--	09/72 ⇨ 07/77

FACET 1.4923

1

CONTACT SETS

Adatt./Suitable: ***MARELLI***

FIAT
2194051
9911554
GENERAL MOTORS
7 992 318
MAGNETI MARELLI
701 184 01
710 070 01

[03] **Supplied until depletion**

- Fornibile fino ad esaurimento delle scorte
- Fourni jusqu'à épuisement du stock
- Lieferbar solange vorrat reicht
- Suministrado hasta el stock termina

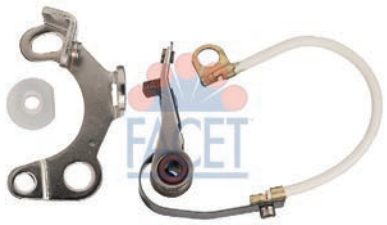

FACET 1.4926

1

CONTACT SETS

Adatt./Suitable: ***MARELLI***

MAGNETI MARELLI
718 097 01

[00] **Eliminated on 12-01-2021. Please verify the availability through our local distributors**

- Eliminato il 12-01-2021. Verificare la disponibilità presso i nostri distributori
- Eliminé le 12-01-2021. Verifier la disponibilité auprès de nos distributeurs sur place
- Am 12-01-2021 gestrichen. Evtl. Verfügbarkeit bitte bei unseren Händlern prüfen
- Eliminado en fecha 12-01-2021. Verificar la disponibilidad a través de nuestros distribuidores locales

FACET 1.4927

1

CONTACT SETS

Adatt./Suitable: ***MARELLI***

ALFA ROMEO
105 02 05 011 00/03
60710643
FIAT
82205020
9911453
9912921
9912922
SEATT
102541.06

FSO		
POLONEZ I 1.5	AA	10/77 ⇨ 08/88

FACET 1.4932

1

CONTACT SETS

Adatt./Suitable: ***MARELLI***

FIAT
9913862
MAGNETI MARELLI
710 650 01
711 985 02
PEUGEOT
00 600 665 00
PORSCHE
901 602 932 00
RENAULT
08 57 113 600
77 02 001 761
SEAT
000 389 117 3
121461.06
NG1 214 610 6
SE 141914.006B
TALBOT
0060 06 6500

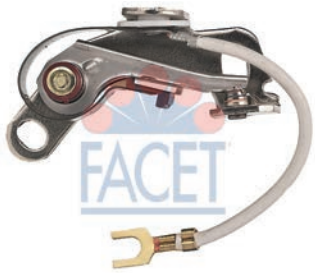

FIAT		
124 1200	124A.000	07/66 ⇨ 10/73
124 1400 Special	124B2.000	12/68 ⇨ 12/72
124 1600 Special T	132AC.000	01/73 ⇨ 07/75
850 0.8	100G.000	07/64 ⇨ 10/72
SEAT		
IBIZA I 0.9	146A000	08/86 ⇨ 05/93
MARBELLA 0.9	09NCA	01/87 ⇨ 12/93
PANDA 0.9	100GL3000	10/80 ⇨ 12/86
PANDA 45	--	01/82 ⇨ 12/85
TERRA 0.9	09NCA	02/87 ⇨ 12/96

FACET 1.4939

1

CONTACT SETS

Adatt./Suitable: ***MARELLI***

ALFA ROMEO
105 48 05 011 04/03
116 34 05 011 00/03
60714274
60727364
FIAT
3895010
7980793
82272761
8661
9919346
9920036
9925257
9929182
MOTO GUZZI
14 715 429
SEAT
233731.06
NG1 116 013 1
NG2 337 310 6

FIAT		
127 0.9	100GL.000	09/71 ⇨ 12/84
131 1.3 Mirafiori	131A6.000	10/74 ⇨ 09/81
132 1.6	132C.000	05/77 ⇨ 09/82
242 1.6	124B3.000	10/75 ⇨ 07/82
DUCATO I 1.8	169B	01/82 ⇨ 12/88
ARGENTA 1600	132D.000	04/81 ⇨ 12/85
ARGENTA 1600 i.e	132D.000	04/81 ⇨ 12/85

MOTO GUZZI (I)		
850 LeMans III	--	01/76 ⇨
850 T3 California	--	01/76 ⇨
850 T3,T4	--	01/76 ⇨
1000 SP	--	01/76 ⇨
V1000 Californiall	--	01/76 ⇨
V1000 Convert	--	01/76 ⇨
V1000 G5	--	01/76 ⇨

FACET 1.4940

1

CONTACT SETS

Adatt./Suitable: ***MARELLI***

FIAT
8660
9919623
9919723
MAGNETI MARELLI
711 185 01
711 985 01
RENAULT
77 02 038 190
ZASTAVA
1335052

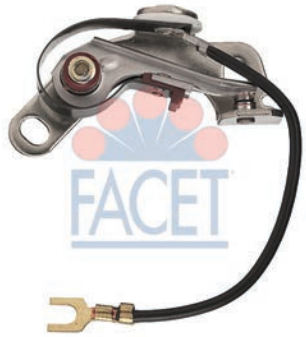

FIAT		
X 1/9 1.3	128AS.000	10/75 ⇨ 06/78
ZASTAVA		
101 1.1	128A.000, 128A.064	05/75 ⇨ 12/93
101 1.1 Super	128AC5.000	07/79 ⇨ 09/81
YUGO 0.9	9A	04/80 ⇨ 06/92

FACET 1.4940HDV

1

CONTACT SETS

Adatt./Suitable: ***MARELLI***

00 **Eliminated on 20-09-2019. Please verify the availability through our local distributors**

- Eliminato il 20-09-2019. Verificare la disponibilità presso i nostri distributori
- Eliminé le 20-09-2019. Verifier la disponibilité auprès de nos distributeurs sur place
- Am 20-09-2019 gestrichen. Evtl. Verfügbarkeit bitte bei unseren Händlern prüfen
- Eliminado en fecha 20-09-2019. Verificar la disponibilidad a través de nuestros distribuidores locales

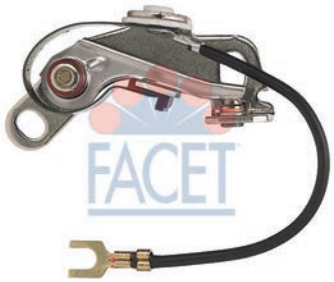

FACET 1.4942

1

CONTACT SETS

Adatt./Suitable: ***MARELLI***

CITROËN
54 862 21M
FIAT
9928255
9929188
MAGNETI MARELLI
711 975 01
711 975 02
SEAT
000 992 918 8
NG1 975 023 1
SE 127914.006B

FIAT		
127 0.9	100GL.048	06/71 ⇨ 05/83
127 1.0	127A.000	01/77 ⇨ 12/86
128 1.1	128A.000	03/69 ⇨ 12/84
131 1.3 Mirafiori	131A6.000	10/74 ⇨ 09/81
132 1.6	132C.000	05/77 ⇨ 09/82
ARGENTA 1600	132D.000	04/81 ⇨ 12/85
ARGENTA 1600 i.e	132D.000	04/81 ⇨ 12/85
FIORINO I 1.0	127A.000	01/80 ⇨ 12/87
FIORINO I 1050	127A.000	01/80 ⇨ 12/87
FIORINO I 900	100GL.000	10/77 ⇨ 10/86
PANDA I 800	100GL6.000	02/81 ⇨ 12/85
PANDA I 950	A112B1.054	09/82 ⇨ 08/83
PANDA I 950 4x4	A112B1.054	09/83 ⇨ 12/86
SEAT		
FURA 0.9	100GL3000	01/82 ⇨ 06/86
MARBELLA 0.8	5K9K718	08/86 ⇨ 12/93
PANDA 34 850	--	01/80 ⇨ 12/83
PANDA 35 850	--	01/80 ⇨ 12/83

FACET 1.4943

1

CONTACT SETS

Adatt./Suitable: ***MARELLI***

MAGNETI MARELLI
711 476 01
MOTO GUZZI
14 715 430

MOTO GUZZI (I)		
850 LeMans III	--	01/76 ⇨
850 T3 California	--	01/76 ⇨
850 T3,T4	--	01/76 ⇨
1000 SP	--	01/76 ⇨
V1000 Californiall	--	01/76 ⇨
V1000 Convert	--	01/76 ⇨
V1000 G5	--	01/76 ⇨

FACET 1.4946M — 3,5

CONTACT SETS

Adatt./Suitable: ***MARELLI***

FIAT
9938276

MAGNETI MARELLI
071277902010
712 478 02
712 779 02
712 779 03

PEUGEOT
5945 10

SEAT
SE 141914.006A

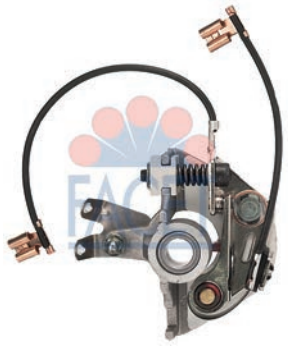

FIAT		
PANDA I 750	141B.000	01/86 ⇨ 01/95
PANDA I 900	100GL3.000	10/80 ⇨ 06/94
PANDA I 900 CL	146A.048	01/86 ⇨ 12/92
REGATA 1.1 60 , 60 L	138B.000	10/83 ⇨ 08/86
REGATA 1.6	149A.000	10/84 ⇨ 06/89
REGATA 70 1.3	138B2.000, 149A3.000	09/83 ⇨ 07/89
REGATA 85 1.6	149A.000	10/83 ⇨ 06/90
RITMO I 1.1	146A4.048	04/85 ⇨ 12/87
UNO 45 0.9	146A.000, 146A1.000	03/83 ⇨ 07/96
UNO 45 0.9 Trend	146A.048	09/89 ⇨ 09/92
UNO 60 1.1 SX	--	01/83 ⇨ 12/85
FSO		
126P 0.6	126A1.048	07/77 ⇨ 12/91
PEUGEOT		
305 1.5	117(XR5S)	05/80 ⇨ 09/82
SEAT		
IBIZA I 0.9	146A000	08/86 ⇨ 05/93
MARBELLA 0.9	09NCA	01/87 ⇨ 12/93
TERRA 0.9	09NCA	02/87 ⇨ 12/96

FACET 1.4948M — 3,5

CONTACT SETS

Adatt./Suitable: ***MARELLI***

MAGNETI MARELLI
071293402010
712 934 02

RENAULT
77 01 031 989

RENAULT		
11 1.7	F2N700	10/83 ⇨ 12/87

FACET 1.4949 — 1

CONTACT SETS

Adatt./Suitable: ***MARELLI***

[00] **Eliminated on 27-01-2021. Please verify the availability through our local distributors**
- Eliminato il 27-01-2021. Verificare la disponibilità presso i nostri distributori
- Eliminé le 27-01-2021. Verifier la disponibilité auprès de nos distributeurs sur place
- Am 27-01-2021 gestrichen. Evtl. Verfügbarkeit bitte bei unseren Händlern prüfen
- Eliminado en fecha 27-01-2021. Verificar la disponibilidad a través de nuestros distributidores locales

[111] **Paired article numbers**
- N° articolo appaiato
- Numéro d'article en paire
- paarige Artikelnummer
- Referencia artículo par

1.4949M

FACET 1.4949M — 3,5

CONTACT SETS

Adatt./Suitable: ***MARELLI***

FIAT
9940569

MAGNETI MARELLI
071277905010
712 779 05

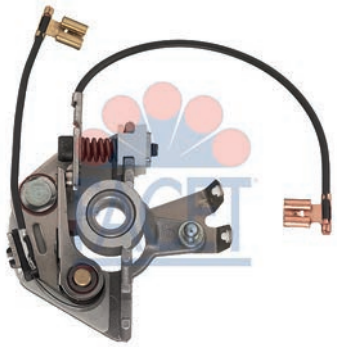

FIAT		
PANDA I 1000	156A2.000	12/93 ⇨
PANDA I 1000 CLX	156A2.000	05/91 ⇨ 12/94
PANDA I 1000 Fire	156A2.000	05/86 ⇨ 04/91
PANDA I 750	156A4.000	01/86 ⇨ 10/03

FACET 1.4950M — 1

CONTACT SETS

Adatt./Suitable: ***MARELLI***

FIAT
9909412

[03] **Supplied until depletion**
- Fornibile fino ad esaurimento delle scorte
- Fourni jusqu'à épuisement du stock
- Lieferbar solange vorrat reicht
- Suministrado hasta el stock termina

FIAT		
126 650	126A1.048	07/77 ⇨ 09/87
FSO		
126P 0.6	126A1.048	07/77 ⇨ 12/91

FACET 1.5084 — 1

CONTACT SETS

Adatt./Suitable: ***MITSUBISHI***

GENERAL MOTORS
93 150 421
93 150 584

HYUNDAI
27135-11000

MAZDA
0494-24-314
3763-24-314
3823-24-314
3879-24-314

MITSUBISHI
MD607101

SUBARU
22107-KA080
22136-KA050 *F

[*F] **Available contact set only-not plate**
- Fornibile solo contatto, no piastra
- Disponible rupteur seul, pas le plateau
- Erhältlich nur unterbrecher, nicht die platte
- Disponible el platino solo, no la plancha

[03] **Supplied until depletion**
- Fornibile fino ad esaurimento delle scorte
- Fourni jusqu'à épuisement du stock
- Lieferbar solange vorrat reicht
- Suministrado hasta el stock termina

FORD AUSTRALIA		
COURIER 1.8	--	01/79 ⇨ 12/84
COURIER 2.0	--	01/79 ⇨
HYUNDAI		
STELLAR 1.4	4G33	10/83 ⇨ 08/86
STELLAR 1.6	G32B	10/83 ⇨ 12/91
MAZDA		
929 I 2.0	MA	05/79 ⇨ 07/86
SUBARU		
J-SERIES 1.0	--	01/87 ⇨ 12/91

FACET 1.5085

1

CONTACT SETS

Adatt./Suitable: ***MITSUBISHI***

NISSAN
22145-73415
22145-89900
22145-89901
22145-89905

[03] **Supplied until depletion**
- Fornibile fino ad esaurimento delle scorte
- Fourni jusqu'à épuisement du stock
- Lieferbar solange vorrat reicht
- Suministrado hasta el stock termina

MITSUBISHI		
COLT I 1.2 GL	4G11	12/78 ⇨ 01/84
CORDIA 1.8 [USA]	G62B	01/82 ⇨ 12/84
CORDIA 1.8 Turbo [USA]	G62B	01/82 ⇨ 12/84
PAJERO I 2.6	4G54	01/83 ⇨ 11/90
PAJERO I 2.6 4WD	4G54	01/83 ⇨ 05/91
SHOGUN I 2.6 4x4	4G54	01/84 ⇨ 02/91
NISSAN		
URVAN III 2.0	Z20	05/87 ⇨ 05/97
VANETTE II 1.5	A15	04/87 ⇨ 11/94
VANETTE II 2.0	Z20S	07/87 ⇨ 08/94

FACET 1.5945

1

CONTACT SETS

Adatt./Suitable: ***PAL***

SKODA
113 911 401

[03] **Supplied until depletion**
- Fornibile fino ad esaurimento delle scorte
- Fourni jusqu'à épuisement du stock
- Lieferbar solange vorrat reicht
- Suministrado hasta el stock termina

SKODA		
105,120 1.0	33*	08/76 ⇨ 12/89
105,120 1.0 105 S, L	742.10	08/76 ⇨ 12/90
105,120 1.0 105 S, L, GL	742.10	08/76 ⇨ 08/83
105,120 1.0 105 S, L, LS	742.10	10/83 ⇨ 12/90
105,120 1.2	37*, 55*	08/76 ⇨ 12/89
105,120 1.2 120 GLS	742.12X	02/83 ⇨ 12/90
105,120 1.2 120 L	742.12, 742.12X	08/76 ⇨ 12/90
105,120 1.2 120 LS	742.12X	08/76 ⇨ 12/90
130 1.3	43*	01/84 ⇨ 12/88
135 1.3	43*	01/87 ⇨ 12/89
136 1.3	46*	01/87 ⇨ 12/89

FACET 1.6854

1

CONTACT SETS

Adatt./Suitable: ***SEV***

GENERAL MOTORS
7 992 234

RENAULT
08 54 921 500
77 01 003 813
77 01 008 141

SEV-MARCHAL
S 406

[03] **Supplied until depletion**
- Fornibile fino ad esaurimento delle scorte
- Fourni jusqu'à épuisement du stock
- Lieferbar solange vorrat reicht
- Suministrado hasta el stock termina

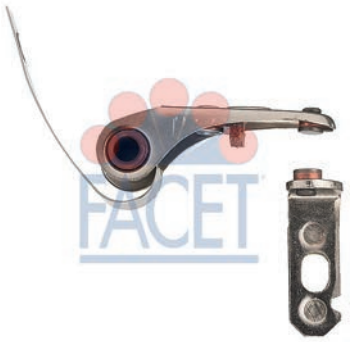

RENAULT		
4 0.8	800705	10/83 ⇨ 10/88

FACET 1.7270

1

CONTACT SETS

Adatt./Suitable: ***U.D.S.S.R.***

LADA
21010-3706800-10
2101-3706800-10

[03] **Supplied until depletion**
- Fornibile fino ad esaurimento delle scorte
- Fourni jusqu'à épuisement du stock
- Lieferbar solange vorrat reicht
- Suministrado hasta el stock termina

LADA		
LADA 1.2	--	01/80 ⇨
LADA 1.3	--	01/80 ⇨
LADA 1.5	--	01/80 ⇨
NIVA I 1600	BA32121	12/76 ⇨ 12/93
RIVA 1.5	--	01/85 ⇨
RIVA 1.6	--	01/85 ⇨

FACET 1.7271

1

CONTACT SETS

Adatt./Suitable: ***U.D.S.S.R.***

FIAT
9918269

LADA
2101-3706800

LADA		
LADA 1.2	--	01/80 ⇨
LADA 1.3	--	01/80 ⇨
LADA 1.5	--	01/80 ⇨
NIVA I 1600	BA32121, BA32121	12/76 ⇨ 12/93

FACET 1.7350

1

CONTACT SETS

Adatt./Suitable: ***ZELMOT***

FIAT
9942108

[03] **Supplied until depletion**
- Fornibile fino ad esaurimento delle scorte
- Fourni jusqu'à épuisement du stock
- Lieferbar solange vorrat reicht
- Suministrado hasta el stock termina

FSO		
126P 0.6	126A1.048	07/77 ⇨ 12/91

DISTRIBUTOR CAPS

•CALOTTE •TETES D'ALLUMEUR •VERTEILERKAPPEN •TAPAS DEL DISTRIBUIDOR

(A) P/NRS. - NOTES

- CODICI - NOTE
- RÉFS. - NOTES
- ARTIKEL-NR. - ANMERKUNGEN
- CODIGOS - NOTAS

2.7530/4PHT — 05

DISTRIBUTOR CAPS

Adatt./Suitable: ***BOSCH***

BOSCH
1 235 522 380 *A
1 235 522 381
MERCEDES-BENZ
A 000 158 48 02
A 000 158 49 02 *A

*A **without cover**
- senza copertura
- sans revêtement
- ohne Abdeckung
- sin cubierta

210 **interference Suppression 1kOhm**
- schermato/a, 1 kOhm
- Antiparasitage, 1kOhm
- entstört, 1 kOhm
- supresión de interferencias, 1 kOhm

(B) PICTURE + TECHNICAL INFO

- FOTO + INFORMAZIONE TECNICA
- ILLUSTRATION + INFORMATION TÉCHNIQUE
- BILD + TECHNISCHE INFO
- FOTO + INFORMACIÓN TÉCNICA

(C) APPLICATION LIST

- GUIDA APPLICAZIONI
- LISTE D'APPLICATIONS
- ANWENDUNGSTABELLE
- LISTA DE APLICACIONES

MERCEDES-BENZ		
190 2.3	M102.985	09/87 ⇨ 09/88
190 2.3 E	M102.985	10/82 ⇨ 09/88
190 E 1.8	M102.910, M102.919	04/90 ⇨ 12/93
190 E 2.0	M102.962	10/82 ⇨ 08/93
190 E 2.3	M102.985	09/86 ⇨ 08/93
190 E 2.3-16	M102.983	04/84 ⇨ 08/88
190 E 2.5-16	M102.990, M102.991	09/88 ⇨ 08/93
190 E Evolution II 2.5	M102.992	05/90 ⇨ 08/93
CLASSE G I 230 GE	M102.998	05/87 ⇨ 08/92
CLASSE G II 200 GE	M102.965	01/90 ⇨ 07/93
CLASSE G II 230 G	M102.958	04/92 ⇨
CLASSE G II 230 GE	M102.979, M102.989, M102.996, M102.997, M102.998	09/89 ⇨
COUPE 200 CE	M102.963	09/89 ⇨ 06/93
COUPE 230 CE	M102.982	03/87 ⇨ 12/92
COUPE 230 CE Cat	M102.982	06/89 ⇨ 12/92

(A)

1 **# FACET**

2 **OEM P/NRS.**
·CODICI ORIGINALI
·RÉFS. D'ORIGINE
·ORIGINALTEILE-NR.
·CODIGOS ORIGINALES

3 **PACKAGING SIZE**
·FORMATO CONFEZIONE
·FORMAT DU CONDITIONNEMENT
·ABPACKENSGROESSE
·TAMAÑO DEL ENVASE

4 **NOTE**
·NOTE
·NOTES
·BERMERKUNGEN
·NOTAS

(B)

1 **PICTURE**
·FOTO
·PHOTO
·BILD
·FOTO

marketing@facet.it

FACET 2.7462 — 04

DISTRIBUTOR CAPS

Adatt./Suitable: ***BOSCH***

ALFA ROMEO
130 85 50 06/07

BMW
12 11 1 271 656
12 11 1 354 499
12 11 1 354 999
12 11 8 630 146
12 11 8 730 055

BOSCH
1 235 522 107
1 235 522 134
1 235 522 157

MERCEDES-BENZ
A 000 158 06 02

OPEL
12 12 128
12 12 147

PORSCHE
616 602 215 00

VOLVO
233260
2332609
241655
870690
8706905

VW
111 905 207 B

ALFA ROMEO		
GT 1300 Junior	AR00530	01/66 ⇨ 12/77
BMW		
5 I 518	M10B18(184VB)	07/74 ⇨ 05/81
1502-2002 1602	M10B16A	04/71 ⇨ 07/75
FORD		
TAUNUS 17M 1.5	--	09/64 ⇨ 10/68
MERCEDES-BENZ		
CLASSE SL I 190 SL	M121.921, M121.928	01/55 ⇨ 12/63
OPEL		
GT 1.1	11SR	09/68 ⇨ 12/70
VOLVO		
P 122 S AMAZON 1.8	B18D	02/67 ⇨ 05/71
VW		
KAEFER 1.2	M51	01/54 ⇨ 07/65

FACET 2.7472PHT — 04

DISTRIBUTOR CAPS

Adatt./Suitable: ***BOSCH***

BMW
12 11 1 351 446
12 11 1 353 117
12 11 1 354 501

BOSCH
1 235 522 051

DAF
163793
232634

FORD
0 710 256
1 144 700 2
1 171 025 6
1 171 026 8

MERCEDES-BENZ
10001585302
A 000 158 07 02
A 000 158 16 02
A 000 158 25 02
A 000 158 53 02

OPEL
12 12 131
12 12 135
12 12 138

PORSCHE
901 602 901 00
901 602 963 00

VOLVO
241669
2416691

PORSCHE		
911 I 2.0 L	901.01, 901.05	01/67 ⇨ 12/68

FACET 2.7476PHT — 04

DISTRIBUTOR CAPS

Adatt./Suitable: ***BOSCH***

ALFA ROMEO
105 48 05 011 06/01
60714282

BOSCH
1 235 522 050
1 235 522 058
1 235 522 059

FORD
0 710 255
1 171 025 5

MERCEDES-BENZ
A 000 158 24 02

OPEL
12 11 253
12 12 136
12 12 137

PORSCHE
616 602 215 02

VOLVO
241653
2416535
243632
2436327

VW
059 905 207
111 905 207 D
892 031 048

ALFA ROMEO		
GT 1300 Junior	AR00530	01/66 ⇨ 12/77
GT 1600	AR00526S	03/63 ⇨ 12/66

ALFA ROMEO		
GT A 1600	AR10538	01/65 ⇨ 12/70
OPEL		
GT 1.1	11SR	09/68 ⇨ 12/70
GT 1.9	19S	09/68 ⇨ 08/73
PORSCHE		
356 A 1600 S	616.15	01/55 ⇨ 12/59
356 A 1600 Super	616.15	01/55 ⇨ 12/59
912 1.6	616.36, 616.39, 616.40	01/65 ⇨ 02/70
VOLVO		
P 121 1.6	B16A	05/59 ⇨ 09/66
P 121 1.8	B18, B18A	05/59 ⇨ 05/71
P 121 2.0	0JX4G20A6L	11/68 ⇨ 05/71
P 122 S AMAZON 1.6	B16	05/59 ⇨ 09/66
P 122 S AMAZON 1.8	B18, B18D	05/59 ⇨ 05/71
P 122 S AMAZON 2.0	B20B	11/68 ⇨ 05/71
P 210 DUETT 1.8	B18A	08/61 ⇨ 07/67
PV 544 1.6	B16A, B16B	08/61 ⇨ 07/67
PV 544 1.8	B18A, B18D	08/61 ⇨ 07/67

FACET 2.7479PHT — 04

DISTRIBUTOR CAPS

Adatt./Suitable: ***BOSCH***

ALFA ROMEO
700 216
705 410
105 48 05 011 08/02
116 55 05 011 00/02
165 55 05 011 00/02
60714284
60801306
82305237
96586846

BMW
12 11 1 354 449
12 11 1 359 874
12 11 1 363 191
12 11 1 363 291
12 11 1 363 423

BOSCH
1 235 522 056
1 235 522 183

DAF
744626

FIAT
7080442
82301920
82305237
82348987
82361894
9934652
9936014

FORD
0 710 254
1 144 706 9
1 171 025 4
1 523 817
3 240 336
72HF-12106-AA
DIFZ-12106-A

MERCEDES-BENZ
A 000 158 18 02
A 000 158 28 02

OPEL
12 12 143

PEUGEOT
5941 27

RENAULT
77 01 012 536
77 01 029 263
77 02 038 122

SEAT
000 398 066 5
SE 021914.001A

VOLVO
243797
2437978
546279

VW
043 905 207
049 905 207
058 905 207
113 905 207 A
113 905 207 B
113 905 207 C

ZASTAVA
46600193
5248175

ALFA ROMEO		
33 I 1.2	AR30585	06/83 ⇨ 12/89

ALFA ROMEO		
33 I 1.3	AR30168, AR30586, AR30587	06/83 ⇨ 12/89
33 I 1.3 i.e.	AR30168	05/83 ⇨ 12/89
33 I 1.4	AR30587	01/84 ⇨ 12/88
33 I 1.5	AR30588	07/86 ⇨ 12/89
33 I 1.5 4x4	AR30508, AR30588	07/86 ⇨ 12/89
33 I 1.5 QV	AR30146, AR30508, AR30588	06/84 ⇨ 12/89
33 I 1.7	AR30550	01/86 ⇨ 06/90
33 I 1.7 i.e.	AR30558	09/88 ⇨ 12/89
33 I 1.7 i.e. 4x4	AR30558	09/88 ⇨ 12/89
33 I 1.7 QV	AR30550	03/88 ⇨ 12/89
33 II 1.2	AR30743	01/90 ⇨ 08/91
33 II 1.3	AR30732	09/91 ⇨ 10/94
33 II 1.4 4x4	AR30755	07/90 ⇨ 12/92
33 II 1.4 i.e.	AR30755	06/91 ⇨ 09/94
33 II 1.4 i.e. 4x4	AR30755	07/90 ⇨ 09/94
33 II 1.5	AR30734	01/90 ⇨ 04/93
33 II 1.5 i.e	AR30751	01/90 ⇨ 09/94
33 II 1.5 i.e.	AR30750	07/90 ⇨ 08/91
33 II 1.7 16V	AR30746, AR30747	01/90 ⇨ 09/94
33 II 1.7 16V 4x4	AR30746, AR30747	01/90 ⇨ 09/94
33 II 1.7 i.e.	AR30736, AR30737	01/90 ⇨ 09/94
33 II 1.7 i.e. 4x4	AR30736, AR30737	01/90 ⇨ 09/94
75 1.6	AR06100	05/85 ⇨ 09/89
75 1.6 Cat	AR61101	05/89 ⇨ 02/92
75 1.8	AR06168, AR06202, AR61102, AR61201	09/85 ⇨ 02/92
75 1.8 i.e.	61202	08/89 ⇨ 02/92
75 1.8 i.e. Turbo America	61203	02/86 ⇨ 01/90
75 1.8 Turbo	AR06134	09/86 ⇨ 02/92
75 2.0 T.S Cat	AR06224	05/85 ⇨ 02/92
75 2.0 T.S.	AR06166, AR06224	01/87 ⇨ 02/92
90 1.8	AR06202	10/84 ⇨ 07/87
90 2.0 i.e.	AR06210	10/84 ⇨ 07/87
164 2.0 T.S.	AR06416, AR06420	06/87 ⇨ 09/92
164 2.0 Twin Spark	AR06420	06/87 ⇨ 09/92
ALFASUD 1.2	AR30102	06/72 ⇨ 09/84
ALFASUD 1.5 ti	AR30128	05/80 ⇨ 06/84
ALFETTA 1.6	AR01600	01/75 ⇨ 12/84
ALFETTA 1.8	AR01608, AR01608X	07/74 ⇨ 12/84
GIULIETTA I 1.3	AR01644	10/77 ⇨ 06/83
GIULIETTA I 1.6	AR01600	10/77 ⇨ 04/85
GIULIETTA I 1.8	AR01678	04/79 ⇨ 04/85
GIULIETTA I 2.0	AR01655	06/80 ⇨ 04/85
SPIDER I 1600	AR00526, AR01563	03/76 ⇨ 12/93
SPIDER I 2.0i [CAN]	AR01588	09/90 ⇨ 10/93
SPIDER I 2.0i [USA]	AR01588	09/90 ⇨ 10/93
SPIDER I 2.0i Veloce [CAN]	AR01588	09/90 ⇨ 10/93
SPIDER I 2.0i Veloce [USA]	AR01588	09/90 ⇨ 10/93
SPIDER I 2000	AR01544, AR01588, AR01590	01/77 ⇨ 12/93

AUDI		
80 II 1.6	WV	08/78 ⇨ 07/86
100 III 1.8	DR	08/82 ⇨ 12/87

FIAT		
132 2.0	132C2.000	01/76 ⇨ 06/81
DUCATO I 1.8	169B	01/82 ⇨ 12/88
ARGENTA 2000	132D1.000	06/78 ⇨ 12/85

FIAT (BR)		
147 1.1	--	01/82 ⇨ 12/84
PREMIO	--	01/85 ⇨ 12/88
PREMIO 1.3	--	01/85 ⇨
UNO 1.3	1.3	01/85 ⇨ 12/91
UNO 1.5	1.5	01/91 ⇨ 12/93
UNO CS 1.3	1.3	01/85 ⇨ 12/91
UNO CS 1.5	1.5	01/91 ⇨ 12/93
UNO CS 1.5 Furgoneta	1.5	01/91 ⇨ 12/93
UNO MILLE 1.0	1.0	01/91 ⇨ 04/93

FORD		
CAPRI III 1.3	J1E	01/78 ⇨ 06/85
ESCORT III 1.1	GSE	08/83 ⇨ 12/85
ESCORT III 1.4 i	F6B, F6D, FUC	02/86 ⇨ 07/90
ESCORT IV 1.4	F6B, F6D, FUA, FUC	01/86 ⇨ 07/90
ESCORT IV 1.6 Turbo RS	LNB	01/86 ⇨ 07/90
ESCORT IV 1.6 XR3i	LR2, LRB	01/86 ⇨ 07/90
FIESTA I 0.9	TKA, TKW, TLA	05/76 ⇨ 08/83
FIESTA I 1.1	GLA, GLW	05/76 ⇨ 08/83
FIESTA I 1.6 XR2	L3E	08/81 ⇨ 08/83
FIESTA II 1.1	GLC, GSF, GSH	09/83 ⇨ 02/89
FIESTA II 1.3	JPC	09/83 ⇨ 09/89
FIESTA II 1.4	FUB, FUD	10/85 ⇨ 11/89
FIESTA III 1.4	F6E	03/89 ⇨ 12/95
GRANADA 1.7	TV17LC	08/77 ⇨ 05/82
GRANADA 2.0	NEP	08/79 ⇨ 08/85
SIERRA I 2.0	NET, NR2, NRD, NYT	08/82 ⇨ 12/86
SIERRA I 2.0 i	NR2	03/85 ⇨ 12/86
ORION I 1.3	JPA	11/86 ⇨ 07/88
ORION I 1.4	FUA, FUC	12/85 ⇨ 07/90

FORD		
ORION I 1.4 Cat	F6B, F6D	02/87 ⇨ 07/90
ORION I 1.6 i	LRB	03/86 ⇨ 07/90
SCORPIO I 1.8	REC	04/85 ⇨ 02/92
SCORPIO I 2.0	TL20H-NE4, TL20H-NER	10/84 ⇨ 02/90
SCORPIO I 2.0 i	NRA, NRI	04/85 ⇨ 02/92
SIERRA II 2.0	N8C, NES	01/87 ⇨ 02/93
TRANSIT I 1.6	4RB	11/77 ⇨ 10/86
TRANSIT I 2.0	4RC	11/77 ⇨ 07/82
TRANSIT II 1.6	LAC, LAT	09/85 ⇨ 09/92
TRANSIT II 2.0	N6TS, NAT, NAV, NAW, NBA, NCA	09/85 ⇨ 09/94
TRANSIT II 2.0 Cat	N6T	11/85 ⇨ 09/92
TRANSIT II 2.0 EFI	--	08/91 ⇨ 08/94
TRANSIT II 2.0 i	NCA	09/91 ⇨ 07/94
TRANSIT II 2.0 L	NAW, NAX	10/85 ⇨ 03/91

FORD AUSTRALIA		
CORTINA 2.0	--	06/77 ⇨ 08/82
ESCORT 2.0	--	01/77 ⇨ 12/81
ESCORT 2.0 RS	--	01/77 ⇨ 12/81

LANCIA		
BETA 1600	828B.000	08/73 ⇨ 07/82

MERCEDES-BENZ		
O 309	M115.952	01/68 ⇨ 02/89

PEUGEOT		
505 2.0	106E(XN1A)	09/85 ⇨ 09/95
505 2.0 TI, STI	829(ZEJ)	08/79 ⇨ 10/86
505 2.1 i	XN9T	01/83 ⇨ 12/88
505 2.2	851(ZDJ), 851X(ZDJL)	05/81 ⇨ 12/93
505 2.2 GTI	851B(ZDJL)	08/83 ⇨ 12/93

PORSCHE		
924 2.0 Turbo	M31.03	06/80 ⇨ 10/86

SAAB		
90 2.0	B20I	08/84 ⇨ 08/87
900 I 2.0 -16	5B6304GS, B202XI	01/86 ⇨ 06/94
900 I 2.0 c	B201XC	09/79 ⇨ 12/88
900 I 2.0 i	0TLE4G15, B201XI	11/80 ⇨ 08/90
900 I 2.0 S Turbo-16	B202S	07/91 ⇨ 06/94
900 I 2.0 Turbo	B201XL	01/86 ⇨ 12/91
900 I 2.0 Turbo-16	B202L, B202XL	11/85 ⇨ 06/94
900 I 2.0 Turbo-16 S	B202XL	01/84 ⇨ 06/94
900 I 2.0 Turbo-16 S Cat	B202XL	01/89 ⇨ 12/93
900 I 2.1 -16	B212I	08/90 ⇨ 06/94
9000 2.0 -16	5B6304GS, B202XI	12/85 ⇨ 01/93
9000 2.0 -16 CS	5B6304GS	01/89 ⇨ 12/98
9000 2.0 -16 Turbo	B202XL	09/84 ⇨ 08/93
9000 2.0 -16 Turbo CD	B202XL	09/88 ⇨ 08/93
9000 2.3 -16 CD	B234I	08/89 ⇨ 12/98
9000 2.3 -16 CS	B234I	09/89 ⇨ 12/98

SEAT		
CORDOBA I 1.6 i	ALM	02/93 ⇨ 12/02
IBIZA I 1.2	021A1000	11/84 ⇨ 12/93
IBIZA I 1.2 i	021C.1000	01/89 ⇨ 05/93
IBIZA I 1.5 i	021B.2000	10/86 ⇨ 05/93
MALAGA 1.2	021A1000	05/85 ⇨ 12/93
MALAGA 1.5	021A2000	05/85 ⇨ 12/93
MALAGA 1.5 i	021B.2000	01/87 ⇨ 12/93

TALBOT		
1307-1510 Simca 1307 1.3	--	07/75 ⇨ 01/80
SIMCA 1309	--	01/78 ⇨ 12/86
SOLARA 1.3	2M102.979	02/80 ⇨ 07/86
TAGORA 2.1	5N2	06/80 ⇨ 12/83

VOLVO		
240 1.8	B17A	11/78 ⇨ 07/85
240 2.0	0JX4G20A6L, B19ET, B200E, B200F, B200K	08/74 ⇨ 12/93
240 2.1 Turbo	B21ET, B21FT	08/80 ⇨ 07/85
240 2.3	B230A, B230E, B230F, B230FD, B230FX, B230K	08/83 ⇨ 08/93
240 2.3 Cat	B230F	08/91 ⇨ 07/92
240 2.3 i Cat	B230F	08/86 ⇨ 07/93
340-360 2.0	B200E, B200EA, B200F, B200K	08/84 ⇨ 07/90
740 2.3	B230A	08/84 ⇨ 07/86
760 2.3 Turbo	B23ET, B23FT	08/82 ⇨ 07/84

VW		
PASSAT II 1.3	79SU16	08/80 ⇨ 07/86
PASSAT II 1.6	DT	08/80 ⇨ 03/88
POLO II 1.0	GL	10/81 ⇨ 10/86
POLO II 1.1	HB	10/81 ⇨ 09/89
POLO II 1.3	GK, GT, HH, HJ, HK, HW	10/81 ⇨ 09/89
JETTA II 1.3	GT, HK	01/84 ⇨ 06/87
JETTA II 1.6	HM	12/83 ⇨ 07/88
JETTA II 1.8	EV, GU	01/84 ⇨ 10/91
JETTA II 1.8 Syncro	GU	08/87 ⇨ 12/88
CADDY I 1.5	JB	08/82 ⇨ 07/83
CADDY I 1.6	EW, HN	01/83 ⇨ 07/92
DERBY 1.0	GL	10/81 ⇨ 12/84
DERBY 1.1	HB	02/77 ⇨ 09/81
DERBY 1.3	HH	02/77 ⇨ 09/81

VW		
GOLF I 1.3	HK	08/83 ⇨ 07/86
GOLF I 1.6	EW, HN	08/83 ⇨ 04/92
GOLF I 1.8	DX, EX, JH	08/82 ⇨ 04/93
GOLF II 1.0	GN	11/83 ⇨ 08/85
GOLF II 1.3	GT, HK	08/83 ⇨ 06/87
GOLF II 1.6 [CHE] [SWE]	HM	08/83 ⇨ 07/85
GOLF II 1.8	GU	08/84 ⇨ 10/91
GOLF II 1.8 GTI	EV	08/83 ⇨ 10/91
QUANTUM 1.7	--	01/85 ⇨ 12/87
SCIROCCO I 1.1	FA	04/74 ⇨ 07/79
SCIROCCO I 1.3	GF	08/79 ⇨ 07/80
SCIROCCO I 1.5	JB	08/77 ⇨ 07/80
SCIROCCO II 1.3	GF, HK	08/80 ⇨ 07/84
SCIROCCO II 1.6	1HyFAD, EW, HN	08/80 ⇨ 12/89
SCIROCCO II 1.8	DX, EX, JH	08/82 ⇨ 07/92

ZASTAVA		
YUGO 45 [USA]	--	01/86 ⇨

FACET **2.7480PHT** 04

DISTRIBUTOR CAPS

Adatt./Suitable: ***BOSCH***

BOSCH
1 235 522 196
1 235 522 409 *A

OPEL
03469033
12 11 252
12 11 265
12 11 267 *A

***A Available distributor cap only not screen**

- Fornita solo calotta, no copertura
- Disponible seulement la tete et non pas le couvrcle
- Erhältlich nur die kappe, nicht die haube
- Disponible solo la tapa, no la copertura

HOLDEN		
CAMIRA 1.6	16JH	08/82 ⇨ 02/86
CAMIRA 1.8 MPFi	6TZ204XS85K01	11/84 ⇨ 01/86
CAMIRA 1.8 SPFi	6TZ204XS85K01	02/86 ⇨ 03/87

OPEL		
ASCONA C 1.3 N	13N	09/81 ⇨ 08/86
ASCONA C 1.6	16N	09/81 ⇨ 08/88
ASCONA C 1.6 S	16SH	09/81 ⇨ 08/86
ASCONA C 1.8 E	C18NE	01/85 ⇨ 08/86
ASCONA C 1.8 i	18E	09/82 ⇨ 08/86
CORSA A 1.0	10S	09/82 ⇨ 03/93
CORSA A 1.2	12N, 12NC, E12GV	09/82 ⇨ 08/90
CORSA A 1.2 N	12NC, E12GV	01/85 ⇨ 10/87
CORSA A 1.6 GSI	E16SE	05/88 ⇨ 03/92
KADETT B 1.1	11N	08/71 ⇨ 08/73
KADETT D 1.0	10N	09/79 ⇨ 08/82
KADETT E 1.2	12SC	09/84 ⇨ 07/86
KADETT E 1.6 S	16S	09/84 ⇨ 08/86
KADETT E 1.8 E	C18NE	10/85 ⇨ 08/86
KADETT E 1.8 GSI	18E	09/84 ⇨ 08/86
KADETT E 1.8 i	18E, C18NE, C18NT	08/84 ⇨ 09/92
MANTA B 1.3 N	13N	03/79 ⇨ 12/80
MANTA B 1.3 S	13S	08/81 ⇨ 08/86
MANTA B 1.6 S	16S	09/75 ⇨ 12/81
MANTA B 1.9 N	19N	08/76 ⇨ 12/81
MANTA B 2.0	20N	08/77 ⇨ 12/80
OMEGA A 2.4 i	C24NE	09/88 ⇨ 03/94
VECTRA A 1.4 S	14NV	04/88 ⇨ 06/92

FACET 2.7481PHT — 05

DISTRIBUTOR CAPS

Adatt./Suitable: ***BOSCH***

ALFA ROMEO
119 00 05 011 04/02
60735405

BMW
12 11 1 271 657
12 11 1 355 626
12 11 1 359 706
12 11 1 363 292
12 11 1 363 422

BOSCH
1 235 522 040
1 235 522 362 *A

DAF
698594

FORD
1 523 785
1 583 458
72TF-12106-AA
78TF-12106-AA

MAN
51.26310-0001

MERCEDES-BENZ
A 000 158 22 02
A 000 158 50 02

OPEL
12 11 250
12 12 141

PORSCHE
930 602 904 00
930 602 908 00

VOLVO
243658
2436582
243803
2438034

VW
073 905 207

*A **Available distributor cap only not screen**
- Fornita solo calotta, no copertura
- Disponible seulement la tete et non pas le couvrcle
- Erhältlich nur die kappe, nicht die haube
- Disponible solo la tapa, no la copertura

ALFA ROMEO		
6 2.0	AR01932	07/81 ⇨ 12/86
75 2.5 V6	AR01646, AR01648, AR01911	05/85 ⇨ 08/86
75 3.0 V6	AR06120, AR61503	01/87 ⇨ 02/92
75 3.0 V6 Cat	AR06124	01/87 ⇨ 02/92
90 2.5 i.e. V6	AR01646	10/84 ⇨ 07/87
BMW		
5 II 525 i	M30B25(256EA)	06/81 ⇨ 12/87
5 II 528 i	M30B28(286EA)	06/81 ⇨ 12/87
6 I 628 CSi	M30B28	09/79 ⇨ 08/87
7 I 728	M30B28	05/77 ⇨ 08/79
7 I 728 i	M30B28	09/77 ⇨ 08/86
7 I 730	M30B30	05/77 ⇨ 08/79
FORD		
TRANSIT II 2.9 i	BRT	01/91 ⇨ 09/94
MAN		
E2000	E2866DF01	05/00 ⇨
F2000	E2866DF01	03/00 ⇨
NG	E2866DUH01	01/95 ⇨ 07/99
NL	E2866DUH01, E2866DUH02	05/93 ⇨ 07/99
OPEL		
OMEGA A 3.0	30NE, C30LE, C30NE	03/87 ⇨ 03/94
OMEGA A 3.0 Cat	C30NE	03/87 ⇨ 03/94
SENATOR B 2.5 i	25NE	09/90 ⇨ 09/93
SENATOR B 3.0	30NE, C30LE	09/87 ⇨ 09/93
SENATOR B 3.0 i Cat	C30NE	01/88 ⇨ 09/93

FACET 2.7490PHT — 07

DISTRIBUTOR CAPS

Adatt./Suitable: ***BOSCH***

BOSCH
0 290 004 500 *A
0 290 004 502 *A
1 235 522 208

MERCEDES-BENZ
A 000 158 34 02 *A
A 000 158 42 02 *A

PORSCHE
928 602 902 00 *A

*A **Available distributor cap only not screen**
- Fornita solo calotta, no copertura
- Disponible seulement la tete et non pas le couvrcle
- Erhältlich nur die kappe, nicht die haube
- Disponible solo la tapa, no la copertura

[210] **interference Suppression 1kOhm**
- schermato/a, 1 kOhm
- Antiparasitage, 1kOhm
- entstört, 1 kOhm
- supresión de interferencias, 1 kOhm

MERCEDES-BENZ		
CLASSE S II 380 SE, SEL	M116.961, M116.963	09/80 ⇨ 08/85
CLASSE S II 380 SEC	M116.963	10/81 ⇨ 07/85
CLASSE S II 500 SE, SEL	M117.961, M117.963	12/79 ⇨ 08/85
CLASSE S II 500 SEC	M117.963	08/80 ⇨ 08/85
CLASSE SL III 380 SL	M116.960, M116.962	09/80 ⇨ 08/85
PORSCHE		
928 4.7 S	M28.11, M28.12	09/79 ⇨ 07/83

FACET 2.7492PHT — 07

DISTRIBUTOR CAPS

Adatt./Suitable: ***BOSCH***

BOSCH
0 290 004 501 *A
0 290 004 503
1 235 522 074
1 235 522 323

MERCEDES-BENZ
A 000 158 27 02
A 000 158 36 02 *A
A 000 158 41 02 *A

*A **Available distributor cap only not screen**
- Fornita solo calotta, no copertura
- Disponible seulement la tete et non pas le couvrcle
- Erhältlich nur die kappe, nicht die haube
- Disponible solo la tapa, no la copertura

[210] **interference Suppression 1kOhm**
- schermato/a, 1 kOhm
- Antiparasitage, 1kOhm
- entstört, 1 kOhm
- supresión de interferencias, 1 kOhm

MERCEDES-BENZ		
CLASSE G I 280 GE	M110.994	11/79 ⇨ 08/89
CLASSE G II 280 GE	M110.994	04/92 ⇨
CLASSE S II 280 S	M110.924	12/79 ⇨ 07/85
CLASSE SL III 280 SL	M110.986	06/76 ⇨ 09/81
CLASSE SL III 280 SLC	M110.986	06/76 ⇨ 09/81
TRE VOLUMI I 280 E	M110.984	02/76 ⇨ 11/85
PUCH		
G-MODELL 280 GE	M110.994	01/86 ⇨ 12/91

FACET 2.7493PHT — 04

DISTRIBUTOR CAPS

Adatt./Suitable: ***BOSCH***

AUDI
035 905 207 A

BOSCH
1 235 522 218

VW
035 905 207
035 905 207 A

[03] **Supplied until depletion**
- Fornibile fino ad esaurimento delle scorte
- Fourni jusqu'à épuisement du stock
- Lieferbar solange vorrat reicht
- Suministrado hasta el stock termina

AUDI		
100 III 1.9	WH	08/82 ⇨ 07/84
100 III 2.2	KZ	10/84 ⇨ 09/86
VW		
PASSAT II 1.9	WN	01/81 ⇨ 07/83
PASSAT II 2.2	KX	01/85 ⇨ 03/88
SANTANA 1.9	WN	08/81 ⇨ 07/83

FACET 2.7494PHT — 04

DISTRIBUTOR CAPS

Adatt./Suitable: ***BOSCH***

AUDI
027 905 207
030 905 207

BMW
12 11 1 326 765
12 11 1 706 122

BOSCH
1 235 522 213

SEAT
026 905 207 2
030 905 207

TOYOTA
19101-02020

VW
026 905 207 2
027 905 207
030 905 207
055 905 207
281 905 207
325 905 207 2

AUDI		
80 II 1.3	EP	09/78 ⇨ 07/86
80 II 1.6	DT, JU, WV	08/78 ⇨ 03/87
80 II 1.8	DS, JN	01/83 ⇨ 08/86
80 II 1.8 CC quattro	JN, JV	08/84 ⇨ 08/86
80 II 1.8 GTE	DZ	10/84 ⇨ 08/86
80 IV 2.0 E quattro	ABK	09/91 ⇨ 12/94
90 I 1.8	JN	06/84 ⇨ 03/87
100 IV 2.0 E quattro	AAD	12/90 ⇨ 07/92
BMW		
3 II 316	M10B18(184VC), M10B18(184VD)	09/83 ⇨ 06/88
3 II 316 i	M10B18(184KA)	08/87 ⇨ 08/88
3 II 318 i	M10B18(184EA), M10B18(184KA)	09/82 ⇨ 08/88
3 I 315	M10B16(164VB)	03/81 ⇨ 03/84
5 II 518	M10B18(184VC), M10B18(184VD)	06/81 ⇨ 09/84
5 II 518 i	M10B18(184EB)	05/81 ⇨ 12/87
5 I 518	M10B18(184VB)	07/74 ⇨ 05/81
RENAULT		
FUEGO 1.6 [USA] R1368	A7L752	01/82 ⇨ 12/84

SEAT		
AROSA 1.0	AER, ALL	05/97 ⇨ 06/04
AROSA 1.4	AEX, AKV, APQ	05/97 ⇨ 06/04
CORDOBA I 1.0 16V	AST, AVZ	05/00 ⇨ 10/02
CORDOBA I 1.0 i	AER	09/96 ⇨ 10/02
CORDOBA I 1.4	ANX	12/97 ⇨ 04/99
CORDOBA I 1.4 i	ABD, AEX, AKV, APQ	06/94 ⇨ 12/02
CORDOBA I 1.4 i 16V	AFH	09/96 ⇨ 10/02
CORDOBA I 1.6 i	1F, ABU, AEE, AFT	02/93 ⇨ 06/99
CORDOBA I 1.8 i	ABS, ACC, ADZ	02/93 ⇨ 09/02
CORDOBA I 1.8 i 16V	148D	10/93 ⇨ 08/96
CORDOBA I 2.0 i	2E	02/93 ⇨ 06/99
IBIZA II 1.0	AAU	03/93 ⇨ 09/96
IBIZA II 1.0 i	AER	09/96 ⇨ 02/02
IBIZA II 1.3 i	AAV	03/93 ⇨ 08/99
IBIZA II 1.4	ANX	12/97 ⇨ 04/99
IBIZA II 1.4 i	ABD, AEX, AKV, APQ	09/93 ⇨ 02/02
IBIZA II 1.4 i 16V	AFH	06/97 ⇨ 02/02
IBIZA II 1.6 i	1F, ABU, AEE, AFT, ALM	03/93 ⇨ 06/99
IBIZA II 1.8 i	ABS, ACC, ADZ	03/93 ⇨ 08/99
IBIZA II 1.8 i 16V	148D	11/93 ⇨ 08/96
IBIZA II 2.0 i	2E, AGG	03/93 ⇨ 08/99
INCA 1.4 i	AEX, AKV, APQ	11/95 ⇨ 06/03
INCA 1.6 i	1F, AEE	11/95 ⇨ 05/98
TOLEDO I 1.6 i	1F, ABN, EZ	05/91 ⇨ 03/99
TOLEDO I 1.8 16V	KR, PL	05/91 ⇨ 03/99
TOLEDO I 1.8 GT	KR	05/91 ⇨ 11/92
TOLEDO I 1.8 i	ABS, RP	05/91 ⇨ 12/96
TOLEDO I 2.0 i	2E	05/91 ⇨ 03/99
SKODA		
FELICIA 1.6	6A16XHT	06/97 ⇨ 04/02
FELICIA 1.6 GLX	6A16XHT	08/95 ⇨ 03/98
FELICIA 1.6 LX	6A16XHT	08/95 ⇨ 03/98
OCTAVIA I 1.6	6A16XHT	09/96 ⇨ 09/04
TOYOTA		
AVENSIS I 1.6	4A-FE	09/97 ⇨ 10/00
CARINA E 1.6	4A-FE	04/92 ⇨ 09/97
CARINA E 1.6 16V	4A-FE	12/94 ⇨ 09/97
CARINA E 1.6 GLI	4A-FE	04/92 ⇨ 09/97
CARINA E 1.6 i	4A-FE	02/95 ⇨ 09/97
VOLKSWAGEN (BR)		
APOLLO 1.8	424, 599	06/90 ⇨ 11/92
CADDY 1.6i	MY4	11/98 ⇨
GOL 1.0i	510	11/96 ⇨
GOL 1.0i 16v	511	09/97 ⇨
GOL 1.6	504, 505	09/94 ⇨ 01/97
GOL 1.6i	540, 541	10/96 ⇨
GOL 1.8	521, 522	04/94 ⇨ 01/97
GOL 1.8i	542, 543	10/96 ⇨
GOL 2.0i	528, 529, 546, 547	09/94 ⇨
LOGUS 1.6	504, 505	10/94 ⇨ 12/96
LOGUS 1.8	524, 525, 599	12/92 ⇨ 12/96
LOGUS 2.0	653	11/93 ⇨ 05/94
LOGUS 2.0i	526, 527	05/94 ⇨ 12/96
PARATI 1.0i 16v	511	09/97 ⇨
PARATI 1.6	504, 505	08/95 ⇨ 01/97
PARATI 1.6i	540, 541	10/96 ⇨
PARATI 1.8	521, 522	08/95 ⇨ 01/97
PARATI 1.8i	542	10/96 ⇨
PARATI 2.0i	528, 529, 546, 547	08/95 ⇨
POINTER 1.8	524, 525, 599	11/93 ⇨ 12/96
POINTER 2.0	653	12/92 ⇨ 05/94
POINTER 2.0i	526, 527	05/94 ⇨ 12/96
POLO 1.6	MJ3, MY4	07/00 ⇨
POLO 1.8	MJ2, MY5, MY6	12/96 ⇨
SAVEIRO 1.6i	540, 541	10/96 ⇨
SAVEIRO 1.8i	542, 543	10/96 ⇨
SAVEIRO 2.0i	546, 547	10/96 ⇨
VW		
PASSAT II 1.6	DT	08/80 ⇨ 03/88
PASSAT II 1.8	DS	01/83 ⇨ 03/88
PASSAT II 1.8 Syncro	DS	01/86 ⇨ 03/88
POLO II 1.0	AAK, AAU, GL, HZ	10/81 ⇨ 09/94
POLO II 1.0 Cat	AAK, AAU	08/89 ⇨ 09/94
POLO II 1.1	HB	10/81 ⇨ 09/89
POLO II 1.3	3F, AAV, GK, GT, HJ, HK, MH	08/82 ⇨ 09/94
POLO II 1.3 Cat	2G, 3F, AAV, MH, NZ	07/87 ⇨ 09/94
POLO II 1.3 G40	PY	01/87 ⇨ 09/94
JETTA II 1.0	HZ	08/85 ⇨ 10/91
JETTA II 1.3	GT, HK, MH, NU	01/84 ⇨ 12/87
JETTA II 1.3 Cat	2G, MH, NZ	06/87 ⇨ 12/91
JETTA II 1.6	EZ, HM	12/83 ⇨ 07/92
JETTA II 1.8	EV, GU, GX, PB, RH, RV	01/84 ⇨ 10/91
JETTA II 1.8 Cat	GX, PF	01/87 ⇨ 10/91
JETTA II 1.8 G60	PG	04/90 ⇨ 07/91
JETTA II 1.8 Syncro	GU	08/87 ⇨ 12/88
JETTA II 1.8i GT	GZ	12/83 ⇨ 07/88
CADDY I 1.6	EW, HN	01/83 ⇨ 07/92
VW		
CADDY I 1.8	JH	08/85 ⇨ 07/92
CADDY II 1.4	AEX, AKV, APQ	11/95 ⇨ 06/03
CADDY II 1.6	AEE	06/96 ⇨ 12/00
CADDY II 60 1.4	AEX, APQ	11/95 ⇨ 01/04
CADDY II 75 1.6	AEE	11/95 ⇨ 09/00
DERBY 1.3	GK, HK	09/82 ⇨ 12/84
GOLF I 1.3	HK	08/83 ⇨ 07/86
GOLF I 1.6	EW, HN	08/83 ⇨ 04/92
GOLF I 1.8	2H, DX, EX, JH, KT	08/82 ⇨ 04/93
GOLF II 1.0	GN, HZ	11/83 ⇨ 10/91
GOLF II 1.3	GT, HK, MH, NU	08/83 ⇨ 12/87
GOLF II 1.3 Cat	2G, NZ	06/86 ⇨ 12/92
GOLF II 1.6	EZ	08/83 ⇨ 07/92
GOLF II 1.6 [CHE] [SWE]	HM	08/83 ⇨ 07/86
GOLF II 1.8	GU, GX, RH, RV	08/84 ⇨ 10/91
GOLF II 1.8 GTI	EV, PB	08/83 ⇨ 10/91
GOLF II 1.8 GTI Cat	PF	01/87 ⇨ 10/91
GOLF II 1.8 GTI G60	PG	04/90 ⇨ 07/91
GOLF II 1.8 GTI G60 Syncro	1H, PG	08/88 ⇨ 12/91
GOLF II 1.8 i Cat	GX	08/87 ⇨ 10/91
GOLF II 1.8 Syncro	GU, GX	02/86 ⇨ 07/91
GOLF II 1.8i GTI [CHE] [SWE]	GZ	01/84 ⇨ 07/86
GOLF III 1.4	ABD, AEX	10/91 ⇨ 04/99
GOLF III 1.6	ABU, AEA, AEE	09/92 ⇨ 08/97
LUPO 1.0	AER, ALL	09/98 ⇨ 07/05
POLO III 1.4	AEX, AKV, ANX, APQ	05/97 ⇨ 09/01
POLO III 1.6	AEA, AEE, ALM	09/94 ⇨ 09/01
POLO III 100 1.4 16V	AFH	04/96 ⇨ 10/99
POLO III 45 1.0	AEV	10/94 ⇨ 09/96
POLO III 50 1.0	AER, ALL	09/96 ⇨ 10/99
POLO III 54 1.4	ANX	01/98 ⇨ 08/99
POLO III 55 1.3	ADX	10/94 ⇨ 04/97
POLO III 55 1.4	AEX	08/95 ⇨ 10/99
POLO III 60 1.4	AEX, AKV, APQ	07/95 ⇨ 09/01
POLO III 75 1.6	AEA, AEE, AHS, ALM	10/94 ⇨ 09/01
POLO III 75 1.6 4motion	AEA	08/95 ⇨ 10/99
PASSAT III 1.6	1F, EZ	04/88 ⇨ 07/92
PASSAT III 1.8	PB, PF	04/88 ⇨ 07/93
PASSAT III 2.0	2E	02/90 ⇨ 05/97
PASSAT III 2.0 Syncro	2E	03/90 ⇨ 12/96
POLO IV 1.0	AER	08/96 ⇨ 12/01
SANTANA 1.6	DT	08/81 ⇨ 12/84
SANTANA 1.8	DS	01/83 ⇨ 12/84
SCIROCCO II 1.3	HK	08/83 ⇨ 07/84
SCIROCCO II 1.6	EW, HN	01/83 ⇨ 12/89
SCIROCCO II 1.8	DX, EX, JH, KT	08/82 ⇨ 07/92
TRANSPORTER IV 2.0	AAC	07/90 ⇨ 04/03
VENTO 1.4	ABD	11/91 ⇨ 09/98
VENTO 1.6	ABU, AEA	09/92 ⇨ 09/98
VENTO 1.8	AAM, ABS, ADZ	11/91 ⇨ 09/98
VENTO 2.0	2E, ADY	11/91 ⇨ 09/98

FACET 2.7498 — 04

DISTRIBUTOR CAPS

Adatt./Suitable: ***BOSCH***

BOSCH
9 231 081 319
9 231 081 413
9 231 081 678

FIAT
7073055

VW
041 905 207 2
71 314 348

00 Eliminated on 17-12-2019. Please verify the availability through our local distributors

- Eliminato il 17-12-2019. Verificare la disponibilità presso i nostri distributori
- Eliminé le 17-12-2019. Verifier la disponibilité auprès de nos distributeurs sur place
- Am 17-12-2019 gestrichen. Evtl. Verfügbarkeit bitte bei unseren Händlern prüfen
- Eliminado en fecha 17-12-2019. Verificar la disponibilidad a través de nuestros distribuidores locales

FIAT (BR)		
147 1.1	--	01/76 ⇨ 12/81
PREMIO	--	01/85 ⇨ 12/88
UNO 1.05	1.05	01/85 ⇨ 12/87
UNO 1.3	1.3	01/85 ⇨ 12/91
UNO 1.3 Furgoneta	1.3	01/85 ⇨ 12/91
UNO CS 1.3	1.3	01/85 ⇨ 12/91
VOLKSWAGEN (BR)		
VWB 1.5	--	01/75 ⇨ 12/82

FACET 2.7499 — 05

DISTRIBUTOR CAPS

Adatt./Suitable: ***BOSCH***

BOSCH
1 235 522 307

00 Eliminated on 22-02-2022. Please verify the availability through our local distributors

- Eliminato il 22-02-2022. Verificare la disponibilità presso i nostri distributori
- Eliminé le 22-02-2022. Verifier la disponibilité auprès de nos distributeurs sur place
- Am 22-02-2022 gestrichen. Evtl. Verfügbarkeit bitte bei unseren Händlern prüfen
- Eliminado en fecha 22-02-2022. Verificar la disponibilidad a través de nuestros distribuidores locales

OPEL		
KADETT D 1.3 S	13S	08/79 ⇨ 08/84

FACET 2.7508PHT — 05

DISTRIBUTOR CAPS

Adatt./Suitable: ***BOSCH***

BOSCH
1 235 522 326
1 235 522 327 *A

MERCEDES-BENZ
A 000 158 43 02 *A

***A Available distributor cap only not screen**

- Fornita solo calotta, no copertura
- Disponible seulement la tete et non pas le couvrcle
- Erhältlich nur die kappe, nicht die haube
- Disponible solo la tapa, no la copertura

210 interference Suppression 1kOhm

- schermato/a, 1 kOhm
- Antiparasitage, 1kOhm
- entstört, 1 kOhm
- supresión de interferencias, 1 kOhm

MERCEDES-BENZ		
124 200 CE	M102.963	09/89 ⇨ 06/93
124 230 CE	M102.982	03/87 ⇨ 12/92
124 230 CE Cat	M102.982	06/89 ⇨ 12/92
190 2.0	M102.921, M102.924	10/82 ⇨ 05/90
190 2.3	M102.985	09/87 ⇨ 09/88
190 2.3 E	M102.985	10/82 ⇨ 09/88
190 E 2.0	M102.962	10/82 ⇨ 08/93
190 E 2.3	M102.985	09/86 ⇨ 08/93

MERCEDES-BENZ		
CLASSE G I 200 GE	M102.964	02/80 ⇨ 08/92
CLASSE G I 230 G	M115.973	03/79 ⇨ 07/93
CLASSE G I 230 GE	M102.981, M102.987	04/82 ⇨ 08/92
CLASSE G II 230 GE	M102.981	04/92 ⇨
KOMBI I 200 T	M102.920, M102.939	11/80 ⇨ 11/85
KOMBI II 200 T	M102.922	09/85 ⇨ 05/90
KOMBI II 200 TE	M102.962, M102.963	09/88 ⇨ 08/92
KOMBI II 230 E Chassis	M102.982	09/86 ⇨ 06/93
KOMBI II 230 TE	M102.982	09/85 ⇨ 08/92
KOMBI II 230 TE Cat	M102.982	06/89 ⇨ 08/92
O 309	M102.943	01/68 ⇨ 02/89
T1 210 2.3	M102.942, M102.945	04/77 ⇨ 02/96
T1 310 2.3	M102.942, M102.945	08/82 ⇨ 02/96
T1 410 2.3	M102.942, M102.945	08/82 ⇨ 06/95
T2/LN1 510	M102.946	04/86 ⇨ 12/94
TRE VOLUMI II 200	M102.922	12/85 ⇨ 10/92
TRE VOLUMI II 200 E	M102.963	09/88 ⇨ 08/93
TRE VOLUMI II 230 E	M102.982	12/84 ⇨ 06/93
TRE VOLUMI II 230 E Cat	M102.982	06/89 ⇨ 06/93
PUCH		
G-MODELL 230 GE	M102.981, M102.987	03/79 ⇨ 12/91

FACET 2.7509PHT — 04

DISTRIBUTOR CAPS

Adatt./Suitable: ***BOSCH***

BOSCH
1 235 522 322

FORD
1 595 255
6 077 549
81SF-12106-EA

Motorcraft
EDH 125

[03] **Supplied until depletion**
- Fornibile fino ad esaurimento delle scorte
- Fourni jusqu'à épuisement du stock
- Lieferbar solange vorrat reicht
- Suministrado hasta el stock termina

FORD		
CORTINA 1300	KL13H	10/70 ⇨ 03/72
SIERRA I 1.3	JCT	08/82 ⇨ 12/86
SIERRA I 2.0	NET, NYT	08/82 ⇨ 12/86
P 100 2.0	NAE	10/87 ⇨ 12/92
TRANSIT I 1.6	4RB	11/77 ⇨ 10/86
TRANSIT II 1.6	LAC, LAT	09/85 ⇨ 09/92
TRANSIT II 2.0	NAT, NAV, NAW, NBA, NCA	09/85 ⇨ 09/94
TRANSIT II 2.0 i	NCA	09/91 ⇨ 07/94
TRANSIT II 2.0 L	NAW, NAX	10/85 ⇨ 03/91

FACET 2.7512PHT — 07

DISTRIBUTOR CAPS

Adatt./Suitable: ***BOSCH***

BOSCH
9 231 065 501
9 231 065 506
9 231 065 516
9 231 065 546

GENERAL MOTORS
V S10 867

HOLDEN
GB835
GB926

FORD AUSTRALIA		
BRONCO 5.8	--	01/81 ⇨ 12/85
HOLDEN		
CALAIS_VN 5.0i	5.0V8EFI	08/88 ⇨ 09/91
CALAIS_VP 5.0i Sedan	5.0V8EFI	10/91 ⇨ 07/93
CALAIS_VR 5.0i Sedan	5.0PFIV8	07/93 ⇨ 04/95
CALAIS_VS 5.0i Sedan	5.0V8PFI	04/95 ⇨ 05/96
CALAIS_VS-II 5.0i Sedan	5.0V8PFI	06/96 ⇨ 08/97
CAPRICE_VQ 5.0i Sedan	5.0V8EFI	03/90 ⇨ 11/93
CAPRICE_VR 5.0i Sedan	5.0PFIV8	12/93 ⇨ 04/95
CAPRICE_VS 5.0i Sedan	5.0V8PFI	03/95 ⇨ 08/96
CAPRICE_VS-II 5.0i Sedan	5.0V8PFI	09/96 ⇨ 08/97
COMMODORE VR 5.0i	5.0PFIV8	07/93 ⇨ 04/95
COMMODORE VR 5.0i Wagon	5.0PFIV8	07/93 ⇨ 04/95
COMMODORE VS 5.0i	5.0V8PFI	04/95 ⇨ 05/96
COMMODORE VS-II 5.0i	5.0V8PFI	06/96 ⇨ 08/97
COMMODORE_VL 5.0i Group A SS	5.0V8EFI	02/87 ⇨ 07/88
COMMODORE_VN 5.0i	5.0V8EFI	08/88 ⇨ 09/91
COMMODORE_VN 5.0i Group A SS	5.0V8EFI	08/88 ⇨ 09/91
COMMODORE_VP 5.0i	5.0V8EFI	10/91 ⇨ 07/93
FORMULA_VR 5.0i	5.0PFIV8	07/93 ⇨ 04/95
STATESMAN_VQ 5.0i	5.0V8EFI	03/90 ⇨ 11/93
STATESMAN_VR 5.0i	5.0PFIV8	12/93 ⇨ 04/95
STATESMAN_VS 5.0i	5.0V8PFI	03/95 ⇨ 08/96
STATESMAN_VS-II 5.0i	5.0V8PFI	09/96 ⇨ 08/97
UTILITY_VG 5.0i	5.0V8EFI	08/88 ⇨ 09/91
UTILITY_VP 5.0i	5.0V8EFI	10/91 ⇨ 07/93
UTILITY_VR COUPÈ 5.0i	5.0PFIV8	07/93 ⇨ 04/95

FACET 2.7517PHT — 05

DISTRIBUTOR CAPS

Adatt./Suitable: ***BOSCH***

BOSCH
1 235 522 325 *A

PORSCHE
944 602 251 00 *A
944 602 902 00 *A

*A **Available distributor cap only not screen**
- Fornita solo calotta, no copertura
- Disponible seulement la tete et non pas le couvrcle
- Erhältlich nur die kappe, nicht die haube
- Disponible solo la tapa, no la copertura

[210] **interference Suppression 1kOhm**
- schermato/a, 1 kOhm
- Antiparasitage, 1kOhm
- entstört, 1 kOhm
- supresión de interferencias, 1 kOhm

PORSCHE		
924 2.5 S	M44.07	09/85 ⇨ 07/87
928 4.7 S	M28.11, M28.12	09/79 ⇨ 07/83

FACET 2.7521PHT — 07

DISTRIBUTOR CAPS

Adatt./Suitable: ***BOSCH***

BMW
12 11 1 284 372
12 11 1 289 519

BOSCH
1 235 522 333
1 235 522 361

BMW		
3 II 323 i	M20B23(236EC)	09/82 ⇨ 09/86
5 II 520 i	M20B20(206EA)	06/81 ⇨ 12/87

FACET 2.7523PHT

07

DISTRIBUTOR CAPS

Adatt./Suitable: ***BOSCH***

BOSCH
1 235 522 329
1 235 522 330 *A
1 235 522 368

MERCEDES-BENZ
A 000 158 44 02 *A

PORSCHE
930 602 919 00 *A

*A **Available distributor cap only not screen**
- Fornita solo calotta, no copertura
- Disponible seulement la tete et non pas le couvrcle
- Erhältlich nur die kappe, nicht die haube
- Disponible solo la tapa, no la copertura

210 **interference Suppression 1kOhm**
- schermato/a, 1 kOhm
- Antiparasitage, 1kOhm
- entstört, 1 kOhm
- supresión de interferencias, 1 kOhm

MERCEDES-BENZ		
123 280 CE	M110.988	03/77 ⇨ 11/85
CLASSE G I 280 GE	M110.994	11/79 ⇨ 08/89
CLASSE G II 280 GE	M110.994	04/92 ⇨
CLASSE S II 280 SE, SEL	M110.989	10/79 ⇨ 07/85
TRE VOLUMI I 280 E	M110.988	02/76 ⇨ 11/85
PORSCHE		
911 I 3.2 SC Carrera	930.20	08/83 ⇨ 08/89
911 III 3.6 Turbo 4	M64.60	03/95 ⇨ 09/97
911 III 3.6 Turbo GT2	M64.60R	03/95 ⇨ 09/97
911 III 3.6 Turbo GT2 4	M64.60R, M64.60RS	08/95 ⇨ 09/97
PUCH		
G-MODELL 280 GE	M110.994	01/86 ⇨ 12/91

FACET 2.7524PHT

05

DISTRIBUTOR CAPS

Adatt./Suitable: ***BOSCH***

BOSCH
1 235 522 332

CITROËN
94 059 413 28

HYUNDAI
27110-22000

PEUGEOT
5941 32

SAAB
91 70 259

CITROËN		
BX 1.4	150C, K1F, K2D	07/86 ⇨ 12/94
BX 1.4 E	150B(XY8), 150J, 150Y, K1F, KAZ	09/82 ⇨ 12/94
BX 1.6	182A, B2C, B6D, B6E	01/87 ⇨ 12/94
BX 1.9	159B, 159C, D6U, DKK	05/85 ⇨ 12/94
BX 1.9 GTi	D6D, D6K	01/87 ⇨ 01/92
BX 14	150C	01/86 ⇨ 02/93
BX 14 E	150A, 150C, K1G	10/82 ⇨ 02/93
BX 15	B1E(XU51C)	01/87 ⇨ 05/92
BX 16	171A, 171B, 171C, 171D, 180Z, 23DH, B1E(XU51C), BAY(XU5CP), BAZ(XU5CP)	10/82 ⇨ 12/94
BX 19	159A, D2A(XU92C), D2C(XU92C), D2E, D6A(XU9J2), DKZ(XU9JA)	09/84 ⇨ 12/94
CITROËN		
BX 19 Cat	DFZ(XU9J1)	07/86 ⇨ 12/94
BX 19 E 4x4	D2F	04/89 ⇨ 02/93
BX 19 GTi	D6A(XU9J2), DKZ(XU9JA)	07/86 ⇨ 02/93
BX 19 GTi 4x4	DKZ(XU9JA)	06/88 ⇨ 02/93
C15 1.0	108C	10/84 ⇨ 07/88
C15 1.0 E	TU9K	11/92 ⇨ 07/96
C15 1.1	109K, E1A, XW7	10/84 ⇨ 12/96
C15 1.3	G1A	07/87 ⇨ 05/88
C15 1.4	150D(XY7)	05/87 ⇨ 10/92
C15 1.4 E	150D(XY7)	05/87 ⇨ 12/96
LNA 1.1	109/5E	07/82 ⇨ 04/85
VISA 11 E	109K	09/78 ⇨ 06/88
HYUNDAI		
S COUPE 1.5 i	G4EK	04/92 ⇨ 05/96
S COUPE 1.5 i Turbo	G4EK-TC	04/91 ⇨ 05/96
PEUGEOT		
104 1.0	108C(XV8)	09/83 ⇨ 06/88
205 I 1.0	108C(XV8)	02/83 ⇨ 12/90
205 I 1.3	G1A	02/84 ⇨ 10/87
205 I 1.4	150B(XY8), 150G(XY7), 150H(XY8), J2	01/83 ⇨ 12/90
205 I 1.5	Y2/K	02/84 ⇨ 10/87
205 I 1.6	B1A(XU51C), B1E(XU51C), BAZ(XU5CP)	08/86 ⇨ 10/87
205 I 1.6 GTI	180A(XU5J), B6D(XU5JA), XU5J1	01/83 ⇨ 12/90
205 I 1.9 GTI	DFZ(XU9J1)	03/87 ⇨ 10/87
205 II 1.1 XA	E1	07/87 ⇨ 10/88
205 II 1.2	F1	01/87 ⇨ 12/90
205 II 1.3	G1A	08/90 ⇨ 07/92
205 II 1.4	150B(XY8), 150G(XY7), 150H(XY8), J2	10/87 ⇨ 12/94
205 II 1.4 CJ	150G(XY7)	03/88 ⇨ 05/89
205 II 1.4 CT	150B(XY8), 150H(XY8)	04/86 ⇨ 12/88
205 II 1.6	B1A(XU51C), B1E(XU51C), BAZ(XU5CP)	10/87 ⇨ 09/98
205 II 1.6 CTI	180A(XU5J), 180Z(XU5J)	03/86 ⇨ 10/90
205 II 1.6 GTI	180A(XU5J), 180Z(XU5J)	10/87 ⇨ 12/89
205 II 1.9 CTI	DFZ(XU9J1)	10/87 ⇨ 12/94
205 II 1.9 GTI Cat	DFZ(XU9J1)	10/87 ⇨ 07/94
309 I 1.1	E1	10/85 ⇨ 07/89
309 I 1.3	G1A, G2S	10/85 ⇨ 08/89
309 I 1.5	Y2/K	06/87 ⇨ 12/89
309 I 1.6	--, 180Z(XU5J), B1A(XU51C), B1D(XU51C), B1E(XU51C), B6B(XU5J), J2, XU5JA	10/85 ⇨ 07/89
309 I 1.6 Cat	BAZ(XU5CP)	09/86 ⇨ 12/89
309 I 1.9	D2B(XU9S), DFZ(XU9J1), XU92C	10/85 ⇨ 07/89
309 II 1.6	18EM, J2, XU5JA	07/89 ⇨ 12/93
309 II 1.6 GTi	--	09/89 ⇨ 10/93
309 II 1.9	XU92C	07/89 ⇨ 12/93
405 I 1.9	DFZ(XU9J1)	05/88 ⇨ 08/92
405 I 1.9 Antipollution	XU92C	01/87 ⇨ 12/92
405 I 1.9 Injection	DFZ(XU9J1)	07/87 ⇨ 12/92
405 I 1.9 Trazione integrale	DFZ(XU9J1)	09/88 ⇨ 07/92
SAAB		
9-3 2.0 i	B204I	02/98 ⇨ 08/03
9-3 2.3 i	B234I	02/98 ⇨ 08/03
900 II 2.0 i	B204I, B206I	07/93 ⇨ 02/98
900 II 2.3 -16	B234I	07/93 ⇨ 02/98

FACET 2.7527PHT

07

DISTRIBUTOR CAPS

Adatt./Suitable: ***BOSCH***

BOSCH
1 235 522 366
1 235 522 382 *A

VOLVO
1346788 *A
13467881 *A

*A **Available distributor cap only not screen**
- Fornita solo calotta, no copertura
- Disponible seulement la tete et non pas le couvrcle
- Erhältlich nur die kappe, nicht die haube
- Disponible solo la tapa, no la copertura

VOLVO		
960 I 2.0	B204FT	08/90 ⇨ 09/93
960 I 2.3	B230GT	08/90 ⇨ 07/94
960 I 2.3 Turbo	B230FT	09/90 ⇨ 08/93
740 2.0	B200E, B200ET, B200G, B200K	01/85 ⇨ 07/92
740 2.0 16V	B204E	09/87 ⇨ 08/90
740 2.0 16V Turbo	B204FT, B204GT	08/89 ⇨ 07/90
740 2.0 GLE	B204E	09/87 ⇨ 08/90
740 2.0 Turbo	B200ET, B200FT	09/87 ⇨ 08/91
740 2.3	B230E, B230F, B230FB, B230G, B230K, B234F	08/84 ⇨ 12/92
740 2.3 GL	B230E	08/84 ⇨ 08/87
740 2.3 Turbo	B230ET, B230FT, B230GT	08/85 ⇨ 08/91
760 2.3	B230ET, B230FT, B230K	08/84 ⇨ 07/92
760 2.3 Turbo	B230ET, B230FT, B230GT	08/84 ⇨ 08/90
780 2.0i	B204GT	01/87 ⇨ 12/90
780 2.0i Turbo	B200ET	01/87 ⇨ 12/90
940 I 2.0	B200E, B200F, B200G	08/90 ⇨ 07/94
940 I 2.0 GL	B204E	09/90 ⇨ 04/92
940 I 2.0 Turbo	B200FT	08/90 ⇨ 07/95
940 I 2.3	B230E, B230F, B230FB, B230FD, B230G, B234F, B234G	08/90 ⇨ 07/95
940 I 2.3 16V	B234G	08/90 ⇨ 07/92
940 I 2.3 Turbo	B230FT, B230GT	08/90 ⇨ 07/94
940 II 2.0 GLT	B200GT	10/94 ⇨ 05/97
940 II 2.0 Turbo	B200FT	04/96 ⇨ 10/98
940 II 2.3	B230FD, B230GK	08/94 ⇨ 05/97
940 II 2.3 ti	B230FK	01/95 ⇨ 10/98
940 II 2.3 Turbo	B230FT, B230GK	08/94 ⇨ 12/98

FACET 2.7528PHT

07

DISTRIBUTOR CAPS

Adatt./Suitable: ***BOSCH***

BOSCH
1 235 522 395 *A

PORSCHE
928 602 211 01 *A

*A **Available distributor cap only not screen**
- Fornita solo calotta, no copertura
- Disponible seulement la tete et non pas le couvrcle
- Erhältlich nur die kappe, nicht die haube
- Disponible solo la tapa, no la copertura

PORSCHE		
928 4.7 S	M28.21, M28.22	08/83 ⇨ 07/86
928 5.4 GTS	M28.49, M28.50	08/91 ⇨ 11/95
968 3.0	M44.43, M44.44	06/91 ⇨ 11/95

FACET 2.7529PHT

04

DISTRIBUTOR CAPS

Adatt./Suitable: ***BOSCH***

AUDI
026 905 209

BOSCH
1 235 522 370

VW
026 905 207
026 905 209
325 905 207 1

AUDI		
80 III 1.8 quattro	SD	09/86 ⇨ 08/90
80 III 1.8 S quattro	JN	09/86 ⇨ 09/91
80 III 2.0 E quattro	3A	08/88 ⇨ 09/90
100 III 1.8	DS, JW, NP	08/83 ⇨ 07/89
100 III 1.8 Cat quattro	4B	08/85 ⇨ 11/90
100 III 1.8 quattro	NP, SH	10/84 ⇨ 07/90

FACET 2.7530/1PHT

04

DISTRIBUTOR CAPS

Adatt./Suitable: ***BOSCH***

AUDI
023 905 207 *A
034 905 207 B *A

BOSCH
0 290 004 032 *A
0 290 004 035 *A
1 235 522 369
1 235 522 371
1 235 522 385 *A
1 235 522 404
1 235 522 405 *A

VW
023 905 207 *A
034 905 207 *A
034 905 207 A *A
034 905 207 B *A
035 905 209 B

[*A] Available distributor cap only not screen
- Fornita solo calotta, no copertura
- Disponible seulement la tete et non pas le couvrcle
- Erhältlich nur die kappe, nicht die haube
- Disponible solo la tapa, no la copertura

AUDI		
80 II 2.0	HP, JS	10/83 ⇨ 09/84
80 II 2.0 quattro	JS	10/83 ⇨ 09/84
80 IV 2.3 E	NG	09/91 ⇨ 01/96
80 IV 2.3 E quattro	NG	09/91 ⇨ 11/94
90 I 2.0	HP, JL, JS, SK	10/84 ⇨ 03/87
90 I 2.0 quattro	JS	08/84 ⇨ 08/86
90 I 2.2	9C54, HY, KX	10/84 ⇨ 03/87
90 I 2.2 E quattro	9C54	11/84 ⇨ 03/87
90 II 2.0	PS	07/88 ⇨ 09/91
90 II 2.0 20 V quattro	NM	08/88 ⇨ 09/91
90 II 2.2 E	9C54	04/87 ⇨ 07/91
90 II 2.2 E quattro	9C54	04/87 ⇨ 09/91
90 II 2.3 E	NG	04/87 ⇨ 09/91
90 II 2.3 E 20V quattro	7A	06/88 ⇨ 09/91
90 II 2.3 E quattro	NG	04/87 ⇨ 09/91
100 III 2.0	KP	08/84 ⇨ 12/87
100 III 2.0 Cat	RT	01/88 ⇨ 11/90
100 III 2.0 E	KP	01/85 ⇨ 12/87
100 III 2.0 E Cat	RT	01/88 ⇨ 11/90
100 III 2.2 Cat	KU	06/89 ⇨ 11/90
100 III 2.2 Cat quattro	KU	06/89 ⇨ 11/90

AUDI		
100 III 2.2 E Turbo quattro	MC	08/86 ⇨ 11/90
100 III 2.2 Turbo	MC	08/86 ⇨ 11/90
100 III 2.3	NF	08/86 ⇨ 11/90
100 III 2.3 E	NF	10/86 ⇨ 11/90
100 III 2.3 E quattro	NF	08/86 ⇨ 11/90
100 III 2.3 quattro	NF	01/90 ⇨ 11/90
100 IV 2.3 E	7M15A-FKS	12/90 ⇨ 07/94
100 IV 2.3 E quattro	7M15A-FKS	12/90 ⇨ 07/94
200 II 2.2	KU	08/84 ⇨ 07/85
200 II 2.2 Turbo	1B, MC	08/85 ⇨ 09/91
200 II 2.2 Turbo quattro	1B, MC	01/85 ⇨ 12/91
A6 I 2.3	7M15A-FKS	06/94 ⇨ 12/95
A6 I 2.3 quattro	7M15A-FKS	06/94 ⇨ 12/95
CABRIOLET 2.3 E	NG	05/91 ⇨ 07/94
COUPE 2.0 20 V	NM	08/89 ⇨ 07/91
COUPE 2.0 20 V quattro	NM	08/89 ⇨ 07/91
COUPE 2.2	9C54	11/88 ⇨ 07/91
COUPE 2.2 GT	9C54	09/84 ⇨ 10/88
COUPE 2.2 quattro	9C54, JT	10/84 ⇨ 07/91
COUPE 2.3	NG	10/88 ⇨ 12/96
COUPE 2.3 20V	7A	08/89 ⇨ 07/91
COUPE 2.3 20V quattro	7A	11/88 ⇨ 12/96
COUPE 2.3 quattro	NG	01/87 ⇨ 12/96
COUPE S2	3B	09/90 ⇨ 09/92
COUPE S2 quattro	3B	09/90 ⇨ 09/92
VW		
PASSAT II 2.0	JS	08/83 ⇨ 03/88
PASSAT II 2.0 Syncro	JS	05/84 ⇨ 03/88
QUANTUM 2.1	--	01/81 ⇨ 12/89
SANTANA 2.0	JS	08/83 ⇨ 12/84
TRANSPORTER IV 2.5	AAF, ACU, AET, AEU, APL, AVT	09/90 ⇨ 06/03
TRANSPORTER IV 2.5 Syncro	AAF, ACU, AET, AEU, APL, AVT	08/92 ⇨ 04/03

FACET 2.7530/3PHT

07

DISTRIBUTOR CAPS

Adatt./Suitable: ***BOSCH***

BOSCH
1 235 522 390
1 235 522 426
1 235 522 449 *A

VW
021 905 207 *A
073 905 207 B

[*A] Available distributor cap only not screen
- Fornita solo calotta, no copertura
- Disponible seulement la tete et non pas le couvrcle
- Erhältlich nur die kappe, nicht die haube
- Disponible solo la tapa, no la copertura

[03] Supplied until depletion
- Fornibile fino ad esaurimento delle scorte
- Fourni jusqu'à épuisement du stock
- Lieferbar solange vorrat reicht
- Suministrado hasta el stock termina

VW		
CORRADO 2.9 VR6	ABV	08/91 ⇨ 12/95
GOLF III 2.8 VR6	AAA	01/92 ⇨ 09/97
LT I 2.4 i	1E	08/89 ⇨ 06/96
PASSAT III 2.8 VR6	AAA	06/91 ⇨ 05/97
VENTO 2.8 VR6	AAA	01/92 ⇨ 09/98

FACET 2.7530/4PHT

05

DISTRIBUTOR CAPS

Adatt./Suitable: ***BOSCH***

BOSCH
1 235 522 380 *A
1 235 522 381

MERCEDES-BENZ
A 000 158 48 02
A 000 158 49 02 *A

[*A] Available distributor cap only not screen
- Fornita solo calotta, no copertura
- Disponible seulement la tete et non pas le couvrcle
- Erhältlich nur die kappe, nicht die haube
- Disponible solo la tapa, no la copertura

[210] interference Suppression 1kOhm
- schermato/a, 1 kOhm
- Antiparasitage, 1kOhm
- entstört, 1 kOhm
- supresión de interferencias, 1 kOhm

MERCEDES-BENZ		
124 200 CE	M102.963	09/89 ⇨ 06/93
124 230 CE	M102.982	03/87 ⇨ 12/92
124 230 CE Cat	M102.982	06/89 ⇨ 12/92
190 2.3	M102.985	09/87 ⇨ 09/88
190 2.3 E	M102.985	10/82 ⇨ 09/88
190 E 1.8	M102.910, M102.919	04/90 ⇨ 12/93
190 E 2.0	M102.962	10/82 ⇨ 08/93
190 E 2.3	M102.985	09/86 ⇨ 08/93
190 E 2.3-16	M102.983	04/84 ⇨ 08/88
190 E 2.5-16	M102.990	09/88 ⇨ 08/93
190 E 2.5-16 Evolution	M102.991	03/89 ⇨ 08/93
190 E 2.5-16 Evolution II	M102.992	05/90 ⇨ 08/93
CLASSE G I 230 GE	M102.998	05/87 ⇨ 08/92
CLASSE G II 200 GE	M102.965	01/90 ⇨ 07/93
CLASSE G II 230 G	M102.958	04/92 ⇨
CLASSE G II 230 GE	M102.979, M102.989, M102.996, M102.997, M102.998	09/89 ⇨
KOMBI II 200 T	M102.922	09/85 ⇨ 05/90
KOMBI II 200 TE	M102.962, M102.963	09/88 ⇨ 08/92
KOMBI II 230 E Chassis	M102.982	09/86 ⇨ 06/93
KOMBI II 230 TE	M102.982	09/85 ⇨ 08/92
KOMBI II 230 TE Cat	M102.982	06/89 ⇨ 08/92
TRE VOLUMI II 200	M102.922	12/85 ⇨ 10/92
TRE VOLUMI II 200 E	M102.963	09/88 ⇨ 08/93
TRE VOLUMI II 230 E	M102.982	12/84 ⇨ 06/93
TRE VOLUMI II 230 E Cat	M102.982	06/89 ⇨ 06/93
PUCH		
G-MODELL 230 GE	M102.989	07/89 ⇨ 07/00

FACET 2.7530/5PHT — 05

DISTRIBUTOR CAPS

Adatt./Suitable: ***BOSCH***

BOSCH
1 235 522 374
FORD
6 146 423
Motorcraft
EDH 183

[00] **Eliminated on 22-02-2021. Please verify the availability through our local distributors**
- Eliminato il 22-02-2021. Verificare la disponibilità presso i nostri distributori
- Eliminé le 22-02-2021. Verifier la disponibilité auprès de nos distributeurs sur place
- Am 22-02-2021 gestrichen. Evtl. Verfügbarkeit bitte bei unseren Händlern prüfen
- Eliminado en fecha 22-02-2021. Verificar la disponibilidad a través de nuestros distribuidores locales

FORD		
SIERRA I 1.8	REB	10/84 ⇨ 12/86
SIERRA I 2.0	NET, NYT	08/82 ⇨ 12/86

FACET 2.7530/6PHT — 07,5

DISTRIBUTOR CAPS

Adatt./Suitable: ***BOSCH***

ALFA ROMEO
195 32 05 021 00/00 *A
60513050 *A
BOSCH
1 235 522 387
1 235 522 388 *A
CHRYSLER
T0267694 *A
FIAT
60809702
7700267694
LANCIA
60809702
PEUGEOT
5941 42 *A
RENAULT
77 00 267 694 *A
77 00 267 728 *A
77 01 041 745 *A
VOLVO
1269920 *A
12699203 *A

[*A] **Available distributor cap only not screen**
- Fornita solo calotta, no copertura
- Disponible seulement la tete et non pas le couvrcle
- Erhältlich nur die kappe, nicht die haube
- Disponible solo la tapa, no la copertura

[03] **Supplied until depletion**
- Fornibile fino ad esaurimento delle scorte
- Fourni jusqu'à épuisement du stock
- Lieferbar solange vorrat reicht
- Suministrado hasta el stock termina

ALFA ROMEO		
164 2.0 Turbo	AR64102	07/90 ⇨ 10/92
164 2.0 V6 Turbo	AR64101, AR64102	03/91 ⇨ 09/98
164 3.0	AR06410	11/87 ⇨ 09/91
164 3.0 i.e. QV	AR64301	09/90 ⇨ 09/92
164 3.0 Lusso [USA] [CAN]	AR06412	10/91 ⇨ 03/93
164 3.0 Sport [CAN] [USA]	AR64301	11/90 ⇨ 03/92
164 3.0 Super	64303	06/87 ⇨ 09/92
164 3.0 V6	AR06410, AR06412	06/87 ⇨ 09/92
GTV 2.0 V6 Turbo	AR16202	06/95 ⇨ 09/98
SPIDER II 2.0 V6 Turbo	AR16202	05/98 ⇨ 04/05
ALPINE		
V6 TURBO	Z7U730, Z7U732, Z7U734	01/88 ⇨ 12/90
LANCIA		
THEMA 2850 V6 i.e.	834E.146	06/88 ⇨ 05/92
RENAULT		
25 2.4 V6 Turbo	Z7U702	10/84 ⇨ 05/90
25 2.5 V6 Turbo	Z7U700	01/90 ⇨ 12/92
25 2.8 V6	Z7W700, Z7W701	06/87 ⇨ 02/90
25 2.8 V6 Injection	Z7W706, Z7W707, Z7W709	06/87 ⇨ 12/92
ESPACE II 2.8 V6	Z7W712, Z7W713, Z7W717	01/91 ⇨ 10/96
SAFRANE I 3.0	Z7X723	02/93 ⇨ 06/96
SAFRANE I 3.0 Biturbo 4x4	Z7X726	02/93 ⇨ 07/96
SAFRANE I 3.0 V6	Z7X721, Z7X722, Z7X723, Z7X753	12/92 ⇨ 07/96
SAFRANE I 3.0 V6 4x4	Z7X721, Z7X722, Z7X723	12/92 ⇨ 07/96
SAFRANE II 2.9 24V	L7X713	03/99 ⇨ 12/00
SAFRANE II 3.0 V6	6216K4FU	10/96 ⇨ 12/00
VOLVO		
760 2.8	B280E, B280F	08/81 ⇨ 08/91
780 2.9	B280E, B280F	08/86 ⇨ 07/90
960 I 2.8 GL	B280E, B280F	09/90 ⇨ 05/92

FACET 2.7530/7PHT — 07

DISTRIBUTOR CAPS

Adatt./Suitable: ***BOSCH***

BOSCH
1 235 522 384
MERCEDES-BENZ
A 103 158 00 02

[03] **Supplied until depletion**
- Fornibile fino ad esaurimento delle scorte
- Fourni jusqu'à épuisement du stock
- Lieferbar solange vorrat reicht
- Suministrado hasta el stock termina

[210] **interference Suppression 1kOhm**
- schermato/a, 1 kOhm
- Antiparasitage, 1kOhm
- entstört, 1 kOhm
- supresión de interferencias, 1 kOhm

MERCEDES-BENZ		
CLASSE E I E 300 4-matic	M103.985	06/93 ⇨ 06/95
CLASSE E I E 300 T 4-matic	M103.985	06/93 ⇨ 06/96
124 300 CE	M103.983	03/87 ⇨ 05/93
190 2.6	M103.942	10/82 ⇨ 09/88
190 E 2.6	M103.942	09/86 ⇨ 08/93
190 E 3.2 AMG	M103.983	01/88 ⇨
CLASSE G II 300 GE	M103.987	09/89 ⇨ 09/97
CLASSE S II 260 SE	M103.941	09/85 ⇨ 06/91
CLASSE S II 300 SE, SEL	M103.981	09/85 ⇨ 06/91
CLASSE SL III 300 SL	M103.982	09/85 ⇨ 08/89
CLASSE SL IV 300 SL	M103.984	03/89 ⇨ 08/93
KOMBI II 260 TE FGST.	M103.940	09/89 ⇨ 08/92
KOMBI II 300 TE	M103.983	01/86 ⇨ 08/92
KOMBI II 300 TE 4-matic	M103.985	09/86 ⇨ 06/93
TRE VOLUMI II 260 E	M103.940	09/85 ⇨ 08/92
TRE VOLUMI II 260 E 4-matic	M103.943	09/86 ⇨ 08/92
TRE VOLUMI II 300 E	M103.983	06/85 ⇨ 08/92
TRE VOLUMI II 300 E 4-matic	M103.943, M103.983, M103.985	01/86 ⇨ 12/93
PUCH		
G-MODELL 300 GE	M103.987	06/89 ⇨ 08/93

FACET 2.7530/8PHT — 07,5

DISTRIBUTOR CAPS

Adatt./Suitable: ***BOSCH***

BMW
1 715 903
12 11 1 285 058 *A
12 11 1 720 124
12 11 1 722 649
12 11 1 725 070
BOSCH
1 235 522 364
1 235 522 365 *A
1 235 522 421

[*A] **Available distributor cap only not screen**
- Fornita solo calotta, no copertura
- Disponible seulement la tete et non pas le couvrcle
- Erhältlich nur die kappe, nicht die haube
- Disponible solo la tapa, no la copertura

[03] **Supplied until depletion**
- Fornibile fino ad esaurimento delle scorte
- Fourni jusqu'à épuisement du stock
- Lieferbar solange vorrat reicht
- Suministrado hasta el stock termina

BMW		
3 II 320 i	M20B20(206EB), M20B20(206KA)	09/82 ⇨ 11/93
3 II 325 e 2.7	M20B27(276KA), M20B27(276KB)	10/83 ⇨ 12/88
3 II 325 i	M20B25(256E1), M20B25(256E2), M20B25(256EX), M20B25(256K1)	09/83 ⇨ 11/93
3 II 325 i X	M20B25(256E1), M20B25(256E2), M20B25(256EX), M20B25(256K1)	03/86 ⇨ 10/93
5 II 520 i	M20B20(206KA)	08/85 ⇨ 12/87
5 II 525 e	M20B27(276EA), M20B27(276EB), M20B27(276KA), M20B27(276KB)	09/81 ⇨ 12/87
5 II 528 i [USA]	--	01/81 ⇨ 12/87
5 II 530 i	--	01/84 ⇨ 12/88
5 II 535 i	M30B34(346EC)	01/85 ⇨ 12/87
5 II 535 i, M 535 i	M30B34(346KA), M30B35(Motronic)	01/85 ⇨ 12/87
5 II M5	S38B35(356ED)	08/85 ⇨ 12/87
5 III 520 i	M20B20(206KA)	06/87 ⇨ 09/90
5 III 525 i	M20B25(256K1)	02/88 ⇨ 08/90
5 III 530 i	M30B30(306KA)	01/88 ⇨ 04/90
5 III 535 i	M30B34(346KB)	11/87 ⇨ 02/93
5 III M5	S38B36(366S1)	09/88 ⇨ 03/92
5 III M5 Cat	S38B36(366S1)	09/88 ⇨ 03/92
6 I 635 CSi	M30B35(Motronic, 9.3:1)	06/78 ⇨ 04/82
6 I M 635 CSi	M88B35(356ED), S38B35(356ED)	04/84 ⇨ 02/89
7 I 735 i	M30B35(Motronic)	04/85 ⇨ 08/86
7 II 730 i, iL	M30B30(306EA), M30B30(306KA)	03/85 ⇨ 03/94
7 II 735 i, iL	M30B34(346KB), M30B35(Motronic, 9.2:1)	06/86 ⇨ 07/92
7 II 750 i, iL V12	M70B50(5012A)	09/87 ⇨ 09/94
7 III 750 i, iL	M73B54(54121), M73B54(54122)	11/94 ⇨ 07/01
8 850 CSi	S70B56(56121)	11/92 ⇨ 12/96
8 850 i, Ci	M70B50(5012A)	01/90 ⇨ 08/94
Z1 2.5	M20B25(256K1)	06/88 ⇨ 06/91

FACET 2.7530/9PHT — 08

DISTRIBUTOR CAPS

Adatt./Suitable: ***BOSCH***

BOSCH
1 235 522 391
1 235 522 392 *A

MERCEDES-BENZ
A 000 158 52 02 *A

*A **Available distributor cap only not screen**
- Fornita solo calotta, no copertura
- Disponibile seulement la tete et non pas le couvrcle
- Erhältlich nur die kappe, nicht die haube
- Disponible solo la tapa, no la copertura

210 **interference Suppression 1kOhm**
- schermato/a, 1 kOhm
- Antiparasitage, 1kOhm
- entstört, 1 kOhm
- supresión de interferencias, 1 kOhm

MERCEDES-BENZ		
CLASSE G II 500 GE	M117.965	09/93 ⇨ 12/94
CLASSE S II 420 SE, SEL	M116.965	10/85 ⇨ 06/91
CLASSE S II 420 SEC	M116.965	10/85 ⇨ 06/91
CLASSE S II 500 SE, SEL	M117.965	09/85 ⇨ 06/91
CLASSE S II 500 SE, SEL Cat	M117.965	06/89 ⇨ 06/91
CLASSE S II 500 SEC	M117.965	09/85 ⇨ 06/91
CLASSE S II 500 SEC Cat	M117.965	06/89 ⇨ 06/91
CLASSE S II 560 SE, SEL	M117.968	10/85 ⇨ 06/91
CLASSE S II 560 SEC	M117.968	10/85 ⇨ 06/91
CLASSE SL III 420 SL	M116.964	01/86 ⇨ 08/89
CLASSE SL III 500 SL	M117.964	01/86 ⇨ 08/89
CLASSE SL III 560 SL	M117.967	09/85 ⇨ 12/89

FACET 2.7530/10PHT — 07

DISTRIBUTOR CAPS

Adatt./Suitable: ***BOSCH***

BOSCH
1 235 522 399
1 235 522 400 *A

GENERAL MOTORS
90 230 575 *A

OPEL
12 11 261 *A
90230575

*A **Available distributor cap only not screen**
- Fornita solo calotta, no copertura
- Disponibile seulement la tete et non pas le couvrcle
- Erhältlich nur die kappe, nicht die haube
- Disponible solo la tapa, no la copertura

03 **Supplied until depletion**
- Fornibile fino ad esaurimento delle scorte
- Fourni jusqu'à épuisement du stock
- Lieferbar solange vorrat reicht
- Suministrado hasta el stock termina

OPEL		
ASCONA C 1.8	18SE, E18NV	09/81 ⇨ 08/88
ASCONA C 1.8 E	S18NV	01/85 ⇨ 08/86
ASCONA C 2.0 i	20NE	09/86 ⇨ 08/88
ASCONA C 2.0 i Cat	C20NE	09/86 ⇨ 08/88
ASCONA C 2.0 i GT	20SEH	03/87 ⇨ 08/88
KADETT E 1.8	18SE	01/86 ⇨ 08/91
KADETT E 1.8 i	S18NV	06/85 ⇨ 08/91
KADETT E 1.8 S	E18NV	09/87 ⇨ 08/91
KADETT E 2.0 GSI	20NE, 20SEH	09/86 ⇨ 08/91
KADETT E 2.0 GSI Cat	C20NE	09/86 ⇨ 08/91
KADETT E 2.0 i	20NE	10/86 ⇨ 02/93
KADETT E 2.0 i Cat	C20NE	10/86 ⇨ 02/93
OMEGA A 1.8	18SEH, E18NVR, S18NV	09/86 ⇨ 03/94
OMEGA A 1.8 N	18NV	09/86 ⇨ 08/87
OMEGA A 1.8 S	18SV	09/86 ⇨ 03/94
OMEGA A 2.0	20SE, C20NE	09/86 ⇨ 04/94
OMEGA A 2.0 i	C20NE	09/86 ⇨ 04/94
OMEGA B 2.0	20SE	03/94 ⇨ 12/00
VECTRA A 1.8 i	18SV	09/88 ⇨ 10/90
VECTRA A 1.8 S	18SV, E18NVR	09/88 ⇨ 10/90
VECTRA A 1.8 S 4x4	E18NVR	01/89 ⇨ 07/89
VECTRA A 2.0 i	20NE, 20SEH	09/88 ⇨ 09/92
VECTRA A 2.0 i 4x4	20NE, 20SEH	01/89 ⇨ 07/92
VECTRA A 2.0 i Cat	C20NE	09/88 ⇨ 11/95
VECTRA A 2.0 i Cat 4x4	C20NE	01/89 ⇨ 11/95
VECTRA A 2.0 i GT	20SEH	09/88 ⇨ 11/95
VAUXHALL		
OMEGA B 2.0	20SE	09/95 ⇨ 09/96

FACET 2.7530/11PHT — 05

DISTRIBUTOR CAPS

Adatt./Suitable: ***BOSCH***

BOSCH
1 235 522 401
1 237 000 065 *A

CITROËN
95 619 491
95 659 654 *A

PEUGEOT
5940 52
5941 44

*A **Available distributor cap only not screen**
- Fornita solo calotta, no copertura
- Disponibile seulement la tete et non pas le couvrcle
- Erhältlich nur die kappe, nicht die haube
- Disponible solo la tapa, no la copertura

CITROËN		
AX 1.3 Sport	M4A	04/87 ⇨ 12/88
AX 10	C1A	09/86 ⇨ 06/92
AX 10 E	C3A	12/86 ⇨ 12/88
AX 11	H1A, H1B, HDZ(TU1M)	09/86 ⇨ 12/97
AX 11 4x4	H1A	06/91 ⇨ 07/92
AX 11 Cat	HAZ(TU1CP)	09/88 ⇨ 12/89
AX 14	K1A(TU3), K1B, K1F, K1G, K1J, K2A, K2B, K2D, KAY(TU3CP), KDX(TU3M/Z), KDY(TU3FM), KDY(TU3M), KDZ(TU3M/Z)	09/86 ⇨ 04/97
AX 14 4x4	KD4, KDX(TU3M/Z), KDY(TU3FM), KDY(TU3M), KDZ(TU3M/Z)	06/91 ⇨ 12/96
AX 14 GT	KDZ(TU3M/Z)	01/89 ⇨ 12/91
BX 1.1	109LA, H1A	04/86 ⇨ 06/91
BX 1.4	150C, K1F, K2D	07/86 ⇨ 12/94
BX 1.4 E	150B(XY8), 150J, 150Y, K1F, KAZ	09/82 ⇨ 12/94
BX 1.6	182A, B2C, B6D, B6E	01/87 ⇨ 12/94
BX 1.9	159B, 159C, D6U, DKK	05/85 ⇨ 12/94
BX 1.9 GTi	D6D, D6K	01/87 ⇨ 01/92
BX 14	150C, KDY(TU3M), KDZ(TU3M/Z)	01/86 ⇨ 02/93
BX 14 E	150A, 150C, K1G	10/82 ⇨ 02/93
BX 16	171A, 171B, 171C, 171D, 180Z, BAY(XU5CP), BAZ(XU5CP)	10/82 ⇨ 12/94
BX 19	159A, D2A(XU92C), D2C(XU92C), D2E, D6A(XU9J2), DKZ(XU9JA)	09/84 ⇨ 12/94
BX 19 Cat	DFZ(XU9J1)	07/86 ⇨ 12/94
BX 19 E 4x4	D2F	04/89 ⇨ 02/93
BX 19 GTi	D6A(XU9J2), DKZ(XU9JA)	07/86 ⇨ 02/93
BX 19 GTi 4x4	DKZ(XU9JA)	06/88 ⇨ 02/93
C15 1.0	108C(XV8), C1A, C1A(TU9/K), C1B(TU9/W), TU9	10/84 ⇨ 12/97
C15 1.1	H1A, HDZ(TU1M), TU1	08/88 ⇨ 07/96
C15 1.1 i	HDZ(TU1M), TU1MZ	07/88 ⇨ 12/96
C15 1.4	K1A, K1G, K1H(TU3A), KDY(TU3M)	07/87 ⇨ 12/96
C15 1.4 E	K1F, K1J, K2D, K3A, KAZ	07/86 ⇨ 12/96
C15 1.4 i	KDY(TU3FM), KDY(TU3M)	05/91 ⇨ 12/96
ZX 1.1	H1A, H1B, HDZ(TU1M), TU1	03/91 ⇨ 06/97
ZX 1.4 i	KDY(TU3M)	10/93 ⇨ 10/97
PEUGEOT		
106 I 1.0	TU9	09/91 ⇨ 03/01
106 I 1.1	H1B(TU1), HDZ(TU1M)	08/91 ⇨ 04/96
106 I 1.4	K5A(TU3), KDY(TU3M), TU3.2	08/91 ⇨ 04/96
205 I 1.4	TU3	01/83 ⇨ 12/90
205 I 1.9 GTI	D6B(XU9JA)	10/86 ⇨ 10/87
205 II 1.0	TU9	10/87 ⇨ 09/98
205 II 1.1	H1B(TU1), HDZ(TU1M)	10/87 ⇨ 09/98
205 II 1.1 CJ	HDZ(TU1M)	10/89 ⇨ 12/94
205 II 1.3	TU24	01/91 ⇨ 12/94
205 II 1.3 Rallye	TU24	10/87 ⇨ 10/90
205 II 1.4	K1D(TU3A), K2B(TU3S), KDY(TU3M), KDZ(TU3M)	06/87 ⇨ 09/98
205 II 1.4 Cat	KAY(TU3CP)	08/87 ⇨ 09/93
205 II 1.4 CJ	K1D(TU3A), KDY(TU3M), KDZ(TU3M)	03/89 ⇨ 12/94
205 II 1.4 CJ Cat	KAY(TU3CP)	01/89 ⇨ 09/93
205 II 1.6 GTI	XU5JA	01/91 ⇨ 12/94
205 II 1.9 GTI	D6B(XU9JA)	10/87 ⇨ 09/98
306 1.4	TU3	01/93 ⇨ 04/97
309 I 1.4	K1D(TU3A), KDY(TU3M), KDZ(TU3M)	03/89 ⇨ 07/89
309 I 1.9 GTI	D6B(XU9JA)	10/86 ⇨ 07/89
309 II 1.1	H1B(TU1), HDZ(TU1M)	09/89 ⇨ 12/93
309 II 1.4	KDZ(TU3M), TU3, TU3F2	07/89 ⇨ 12/93
309 II 1.6	XU5JA	07/89 ⇨ 12/93
309 II 1.6 GTi	--	09/89 ⇨ 10/93
405 I 1.4	K5A(TU3), TU3A, TU3F2	01/87 ⇨ 12/92
405 I 1.6	--	01/87 ⇨ 12/92
405 I 1.9	D2C(XU92C), D6A(XU9J2)	07/87 ⇨ 12/93
405 II 1.4	TU3F2	01/93 ⇨ 12/96
405 II 1.6	18EM	08/92 ⇨ 05/97
405 II 1.9	XU92C	01/93 ⇨ 12/96

FACET 2.7530/14PHT — 05

DISTRIBUTOR CAPS

Adatt./Suitable: ***BOSCH***

BOSCH
9 231 065 529

FORD AUSTRALIA
ADH-2

Motorcraft
ADH 2

03 **Supplied until depletion**
- Fornibile fino ad esaurimento delle scorte
- Fourni jusqu'à épuisement du stock
- Lieferbar solange vorrat reicht
- Suministrado hasta el stock termina

FORD AUSTRALIA		
FAIRLANE 3.2i EFi	--	01/89 ⇨
FAIRLANE 3.9i EFi	--	01/89 ⇨
FAIRLANE 3.9i MPEFi	--	01/89 ⇨
FAIRLANE 4.0i MPEFi	--	01/89 ⇨
FAIRLANE ZL 4.1l	--	01/84 ⇨
FALCON 3.2 Efi	--	03/88 ⇨ 12/88
FALCON 3.3	--	10/84 ⇨ 12/87
FALCON 3.9 Efi	--	07/91 ⇨ 04/92
FALCON 3.9 MPFi	--	03/88 ⇨ 04/92
FALCON 3.9 SPFfi	--	03/88 ⇨ 04/92
FALCON 4.1	--	10/84 ⇨ 02/86

FACET 2.7530/17PHT — 07,5

DISTRIBUTOR CAPS

Adatt./Suitable: **BOSCH**

BMW
12 11 1 289 425
12 11 1 734 109 *A

BOSCH
1 235 522 396 *A
1 235 522 397

*A **Available distributor cap only not screen**
- Fornita solo calotta, no copertura
- Disponible seulement la tete et non pas le couvrcle
- Erhältlich nur die kappe, nicht die haube
- Disponible solo la tapa, no la copertura

03 **Supplied until depletion**
- Fornibile fino ad esaurimento delle scorte
- Fourni jusqu'à épuisement du stock
- Lieferbar solange vorrat reicht
- Suministrado hasta el stock termina

BMW		
3 III 316 i	M40B16(164E1), M43B16(164E2)	09/90 ⇨ 09/93
3 III 318 i	M40B18(184E1)	09/90 ⇨ 08/93
3 II 316 i	M40B16(164E1)	09/87 ⇨ 06/94
3 II 318 i	M40B18(184E1)	06/87 ⇨ 06/94
5 III 518 i	M40B18(184E1)	09/89 ⇨ 04/94

FACET 2.7530/18PHT — 07

DISTRIBUTOR CAPS

Adatt./Suitable: **BOSCH**

AUDI
077 905 205 *A
077 905 207 *A

BOSCH
1 235 522 419
1 235 522 420 *A

VW
077 905 205 *A
077 905 207 *A

*A **Available distributor cap only not screen**
- Fornita solo calotta, no copertura
- Disponible seulement la tete et non pas le couvrcle
- Erhältlich nur die kappe, nicht die haube
- Disponible solo la tapa, no la copertura

03 **Supplied until depletion**
- Fornibile fino ad esaurimento delle scorte
- Fourni jusqu'à épuisement du stock
- Lieferbar solange vorrat reicht
- Suministrado hasta el stock termina

AUDI		
80 III 2.0 E 16V	6A	03/90 ⇨ 09/91
80 III 2.0 E 16V quattro	6A	03/90 ⇨ 08/91
80 IV 2.0 E 16V	6A, ACE	09/91 ⇨ 01/96
100 IV 2.0 E 16V	ACE	01/92 ⇨ 07/94
100 IV 2.0 E 16V quattro	ACE	07/92 ⇨ 07/94
A6 I 2.0 16V	ACE	06/94 ⇨ 12/97
A6 I 2.0 16V quattro	ACE	06/94 ⇨ 12/97
A6 I S6 4.2 quattro	AEC	06/94 ⇨ 12/97
CABRIOLET 2.0 16V	ACE	06/95 ⇨ 07/96
COUPE 2.0 16 V	6A, ACE	01/92 ⇨ 12/96
V8 3.6 quattro	PT	10/88 ⇨ 02/94
V8 4.2 quattro	ABH	10/91 ⇨ 02/94

FACET 2.7530/19PHT — 04

DISTRIBUTOR CAPS

Adatt./Suitable: **BOSCH**

BOSCH
1 235 522 436

GENERAL MOTORS
90 350 765

OPEL
12 11 000
12 11 268
90350765

03 **Supplied until depletion**
- Fornibile fino ad esaurimento delle scorte
- Fourni jusqu'à épuisement du stock
- Lieferbar solange vorrat reicht
- Suministrado hasta el stock termina

OPEL		
ASTRA F 1.4 i	C14NZ	09/91 ⇨ 01/05
CORSA A 1.4 i	C14NZ	01/85 ⇨ 03/93
CORSA A 1.6 GSI	E16SE	05/88 ⇨ 03/92
KADETT E 1.4 i	C14NZ	01/90 ⇨ 07/94
KADETT E 1.6	16SV	09/86 ⇨ 12/91
KADETT E 1.6 i	16SV	07/89 ⇨ 02/93
KADETT E 1.6 S	16SV	09/86 ⇨ 08/91
VECTRA A 1.6	16SV	09/88 ⇨ 05/93
VECTRA A 1.6 S	16SV	09/88 ⇨ 05/93
VAUXHALL		
ASTRA III 1.4 i	C14NZ	09/91 ⇨ 09/98
ASTRAVAN I 1.4 i	C14NZ	09/91 ⇨ 08/95

FACET 2.7530/21PHT — 07

DISTRIBUTOR CAPS

Adatt./Suitable: **BOSCH**

BOSCH
1 235 522 417 *A
1 235 522 418

GENERAL MOTORS
90 297 426

OPEL
12 11 262
90297426

*A **Available distributor cap only not screen**
- Fornita solo calotta, no copertura
- Disponible seulement la tete et non pas le couvrcle
- Erhältlich nur die kappe, nicht die haube
- Disponible solo la tapa, no la copertura

03 **Supplied until depletion**
- Fornibile fino ad esaurimento delle scorte
- Fourni jusqu'à épuisement du stock
- Lieferbar solange vorrat reicht
- Suministrado hasta el stock termina

OPEL		
CALIBRA A 2.0 i 16V	C20XE	06/90 ⇨ 02/94
CALIBRA A 2.0 i 16V 4x4	C20XE	06/90 ⇨ 02/94
KADETT E 2.0 GSI 16V	20XE	12/87 ⇨ 08/91
KADETT E 2.0 GSI 16V Cat	C20XE	03/88 ⇨ 08/91
VECTRA A 2.0 i 16V	20XEJ	02/89 ⇨ 10/90
VECTRA A 2.0 i 16V 4x4	C20XE	08/89 ⇨ 08/95
VECTRA A 2.0 i 16V Cat	C20XE	02/90 ⇨ 11/95
VECTRA A 2000 16V 4x4	20XEJ	01/89 ⇨ 10/90
VECTRA A 2000/GT 16V	20XEJ	01/89 ⇨ 06/94
VECTRA A 2000/GT 16V Cat	C20XE	02/90 ⇨ 11/95
VECTRA A 2000/GT 16V Cat 4x4	C20XE	02/90 ⇨ 11/95
VAUXHALL		
CALIBRA 2.0 i 16V	C20XE	06/90 ⇨ 02/94
CALIBRA 2.0 i 16V 4x4	C20XE	06/90 ⇨ 02/94

FACET 2.7530/22PHT — 07,5

DISTRIBUTOR CAPS

Adatt./Suitable: **BOSCH**

BOSCH
1 235 522 442 *A

CITROËN
5941 47 *A
96 054 877

PEUGEOT
5941 47 *A

*A **Available distributor cap only not screen**
- Fornita solo calotta, no copertura
- Disponible seulement la tete et non pas le couvrcle
- Erhältlich nur die kappe, nicht die haube
- Disponible solo la tapa, no la copertura

03 **Supplied until depletion**
- Fornibile fino ad esaurimento delle scorte
- Fourni jusqu'à épuisement du stock
- Lieferbar solange vorrat reicht
- Suministrado hasta el stock termina

CITROËN		
XM I 3.0	UFZ(ZPJ/Z)	05/89 ⇨ 05/94
XM I 3.0 V6	SFZ(ZPJ/Z), UFZ(ZPJ/Z)	05/89 ⇨ 06/94
XM I 3.0 V6 24V	SKZ(ZPJ4/Z), UKZ(ZPJ4/Z)	07/90 ⇨ 06/94
XM II 3.0 V6	SFZ(ZPJ/Z), UFZ(ZPJ/Z)	05/94 ⇨ 10/00
XM II 3.0 V6 24V	SKZ(ZPJ4/Z), UKZ(ZPJ4/Z)	05/94 ⇨ 10/00
PEUGEOT		
605 3.0	UFZ(ZPJ), UKZ(ZPJ4/Z)	08/89 ⇨ 09/99
605 3.0 SV 24	UKZ(ZPJ4/Z)	08/89 ⇨ 09/99

FACET 2.7530/23PHT — 05

DISTRIBUTOR CAPS

Adatt./Suitable: **BOSCH**

BOSCH
1 235 522 423

FORD
6 182 127

Motorcraft
EDH 279

03 **Supplied until depletion**
- Fornibile fino ad esaurimento delle scorte
- Fourni jusqu'à épuisement du stock
- Lieferbar solange vorrat reicht
- Suministrado hasta el stock termina

FORD		
SCORPIO I 2.0 i	N9B, N9D, N9F, NRA, NRI	05/89 ⇨ 09/94
SIERRA II 2.0 i	N4A, N4I, N9B	01/87 ⇨ 02/93
TRANSIT II 2.0	NSF, NSG	06/94 ⇨ 03/00
TRANSIT II 2.0 CNG	NSH	06/94 ⇨ 03/00
TRANSIT TOURNEO 2.0	NSH	11/94 ⇨ 12/00

VAUXHALL		
CALIBRA 2.0 i 16V 4x4	C20XE	06/90 ⇨ 02/94

FACET 2.7530/26PHT — 04

DISTRIBUTOR CAPS

Adatt./Suitable: ***BOSCH***

BOSCH
0 237 521 024 *B
1 235 522 437

GENERAL MOTORS
90 350 988

HOLDEN
90350988

OPEL
12 11 269
90350988

HOLDEN		
BARINA 1.4 i	C14NZ	04/94 ⇨ 07/97
BARINA_SB 1.2i	C12NZ	04/94 ⇨ 07/97
COMBO 1.4 i	C14NZ	03/96 ⇨ 07/97
COMBO_SB 1.4i	C14NZ	04/94 ⇨ 07/97
OPEL		
ASTRA F 1.4	14NV	09/91 ⇨ 09/93
ASTRA F 1.4 i	C14NZ	09/91 ⇨ 01/05
COMBO B 1.2	C12NZ	07/94 ⇨ 10/01
COMBO B 1.4	C14NZ	07/94 ⇨ 10/01
CORSA A 1.2	12NC, E12GV	09/82 ⇨ 08/90
CORSA A 1.2 i	C12NZ	09/89 ⇨ 03/93
CORSA A 1.2 N	12NC, E12GV	01/85 ⇨ 10/87
CORSA A 1.4 S	14NV	09/89 ⇨ 03/93
CORSA A 1.6 GSI	E16SE	05/88 ⇨ 03/92
CORSA B 1.2 i	12NZ, C12NZ	03/93 ⇨ 09/00
CORSA B 1.4 i	C14NZ	03/93 ⇨ 09/00
FRONTERA A 2.4 i	C24NE	03/92 ⇨ 10/98
KADETT E 1.4 i	C14NZ	01/90 ⇨ 07/94
KADETT E 1.4 S	14NV	07/89 ⇨ 02/93
KADETT E 1.6	16SV	09/86 ⇨ 12/91
KADETT E 1.6 i	16SV	07/89 ⇨ 02/93
KADETT E 1.6 S	16SV	09/86 ⇨ 08/91
OMEGA A 2.4 i	C24NE	09/88 ⇨ 03/94
VECTRA A 1.4 S	14NV	04/88 ⇨ 06/92
VECTRA A 1.6	16SV	09/88 ⇨ 05/93
VECTRA A 1.6 S	16SV	09/88 ⇨ 05/93
VAUXHALL		
ASTRA III 1.4	14NV	09/91 ⇨ 09/93
ASTRA III 1.4 i	C14NZ	09/91 ⇨ 09/98
ASTRA III 1.4 S	14NV	09/91 ⇨ 02/98
ASTRAVAN I 1.4 i	C14NZ	09/91 ⇨ 08/95
COMBO B 1.2	C12NZ	07/94 ⇨ 10/01
COMBO B 1.4	C14NZ	07/94 ⇨ 10/01
CORSA B 1.2 i	C12NZ	03/93 ⇨ 09/00
CORSA B 1.4 i	C14NZ	03/93 ⇨ 09/00
CORSAVAN I 1.4 i	C14NZ	01/94 ⇨ 09/00
FRONTERA A 2.4 i	C24NE	03/92 ⇨ 10/98

FACET 2.7530/27PHT — 07

DISTRIBUTOR CAPS

Adatt./Suitable: ***BOSCH***

BOSCH
1 235 522 434
1 235 522 435 *A

GENERAL MOTORS
90 336 536 *A
90 442 358 *A

HOLDEN
90336536

OPEL
12 11 270 *A
12 11 276 *A
90336536

*A **Available distributor cap only not screen**
- Fornita solo calotta, no copertura
- Disponible seulement la tete et non pas le couvrcle
- Erhältlich nur die kappe, nicht die haube
- Disponible solo la tapa, no la copertura

03 **Supplied until depletion**
- Fornibile fino ad esaurimento delle scorte
- Fourni jusqu'à épuisement du stock
- Lieferbar solange vorrat reicht
- Suministrado hasta el stock termina

HOLDEN		
CALIBRA_YE 2.0i	C20NE	09/91 ⇨ 07/95
CALIBRA_YE 2.0i 16V	C20XE	09/91 ⇨ 07/95
CALIBRA_YE 2.0i 16V Turbo	C20LET	06/94 ⇨ 10/97
OPEL		
ASTRA F 1.8 i	C18NZ	09/91 ⇨ 09/98
ASTRA F 2.0 GSI 16V	C20XE	09/91 ⇨ 01/98
ASTRA F 2.0 i	C20NE	09/91 ⇨ 09/98
ASTRA F 2.0 i 16V	C20XE	03/93 ⇨ 01/98
CALIBRA A 2.0 i	C20NE	08/89 ⇨ 12/96
CALIBRA A 2.0 i 4x4	C20NE	06/90 ⇨ 07/97
CALIBRA A 2.0 i Turbo 4x4	C20LET	08/91 ⇨ 07/97
FRONTERA A 2.0 i	C20NE	03/92 ⇨ 10/98
KADETT E 1.8	18SE	01/86 ⇨ 08/91
KADETT E 1.8 i	C18NZ, S18NV	06/85 ⇨ 05/92
KADETT E 1.8 S	E18NV	09/87 ⇨ 08/91
KADETT E 2.0 GSI	20NE, 20SEH	09/86 ⇨ 08/91
KADETT E 2.0 GSI 16V	20XE	12/87 ⇨ 08/91
KADETT E 2.0 GSI 16V Cat	C20XE	03/88 ⇨ 08/91
KADETT E 2.0 GSI Cat	C20NE	09/86 ⇨ 08/91
KADETT E 2.0 i	20NE	10/86 ⇨ 02/93
KADETT E 2.0 i Cat	C20NE	10/86 ⇨ 02/93
OMEGA A 1.8	18SEH, E18NVR, S18NV	09/86 ⇨ 03/94
OMEGA A 1.8 N	18NV	09/86 ⇨ 08/87
OMEGA A 1.8 S	18SV	09/86 ⇨ 03/94
OMEGA A 2.0	20SE, C20NE	09/86 ⇨ 04/94
OMEGA A 2.0 i	C20NE	09/86 ⇨ 04/94
OMEGA B 2.0	20SE	03/94 ⇨ 12/00
VECTRA A 1.8 i	18SV	09/88 ⇨ 10/90
VECTRA A 1.8 i Cat	C18NZ	03/90 ⇨ 11/95
VECTRA A 1.8 S	18SV, E18NVR	09/88 ⇨ 10/90
VECTRA A 1.8 S 4x4	E18NVR	01/89 ⇨ 07/89
VECTRA A 2.0 i	20NE, 20SEH	09/88 ⇨ 09/92
VECTRA A 2.0 i 16V	20XEJ	02/89 ⇨ 10/90
VECTRA A 2.0 i 16V 4x4	C20XE	08/89 ⇨ 08/95
VECTRA A 2.0 i 16V Cat	C20XE	02/90 ⇨ 11/95
VECTRA A 2.0 i 4x4	20NE, 20SEH	01/89 ⇨ 07/92
VECTRA A 2.0 i Cat	C20NE	09/88 ⇨ 11/95
VECTRA A 2.0 i Cat 4x4	C20NE	01/89 ⇨ 11/95
VECTRA A 2.0 i GT	20SEH	09/88 ⇨ 11/95
VECTRA A 2.0 i Turbo 4x4	C20LET	06/94 ⇨ 11/95
VECTRA A 2000 16V 4x4	20XEJ	01/89 ⇨ 10/90
VECTRA A 2000/GT 16V	20XEJ	01/89 ⇨ 06/94
VECTRA A 2000/GT 16V Cat	C20XE	02/90 ⇨ 11/95
VECTRA A 2000/GT 16V Cat 4x4	C20XE	02/90 ⇨ 11/95
VAUXHALL		
ASTRA III 1.8 i	C18NZ	09/91 ⇨ 09/98
ASTRA III 2.0 i	C20NE	09/91 ⇨ 09/98
ASTRA III 2.0 i 16V	C20XE	09/91 ⇨ 02/98
CALIBRA 2.0 i	C20NE	06/90 ⇨ 07/97
CALIBRA 2.0 i 4x4	C20NE	06/90 ⇨ 07/97
CALIBRA 2.0 i Turbo 4x4	C20LET	03/92 ⇨ 07/97
FRONTERA A 2.0	C20NE	04/95 ⇨ 08/98
FRONTERA A 2.0 i	C20NE	03/92 ⇨ 10/98
OMEGA B 2.0	20SE	09/95 ⇨ 09/96

FACET 2.7530/28PHT — 07

DISTRIBUTOR CAPS

Adatt./Suitable: ***BOSCH***

BOSCH
1 235 522 438
1 235 522 439 *A

GENERAL MOTORS
90 369 031

MAN
51.26310-0009

OPEL
12 11 273

00 **Eliminated on 13-09-2021. Please verify the availability through our local distributors**
- Eliminato il 13-09-2021. Verificare la disponibilità presso i nostri distributori
- Eliminé le 13-09-2021. Verifier la disponibilité auprès de nos distributeurs sur place
- Am 13-09-2021 gestrichen. Evtl. Verfügbarkeit bitte bei unseren Händlern prüfen
- Eliminado en fecha 13-09-2021. Verificar la disponibilidad a través de nuestros distribuidores locales

*A **Available distributor cap only not screen**
- Fornita solo calotta, no copertura
- Disponible seulement la tete et non pas le couvrcle
- Erhältlich nur die kappe, nicht die haube
- Disponible solo la tapa, no la copertura

03 **Supplied until depletion**
- Fornibile fino ad esaurimento delle scorte
- Fourni jusqu'à épuisement du stock
- Lieferbar solange vorrat reicht
- Suministrado hasta el stock termina

MAN		
NG	E2866DUH01	01/95 ⇨ 07/99
NL	E2866DUH01, E2866DUH02	05/93 ⇨ 07/99
OPEL		
OMEGA A 2.6 i	C26NE	09/90 ⇨ 03/94
OMEGA A 3.0	30NE, C30LE, C30NE	03/87 ⇨ 03/94
OMEGA A 3.0 24V	C30SE	09/89 ⇨ 03/94
OMEGA A 3.0 24V Omega 3000	C30SE	09/88 ⇨ 04/94
OMEGA A 3.0 Cat	C30NE	03/87 ⇨ 03/94
SENATOR B 2.5 i	25NE	09/90 ⇨ 09/93
SENATOR B 3.0	30NE, C30LE	09/87 ⇨ 09/93
SENATOR B 3.0 24V	C30SE	09/89 ⇨ 09/93
SENATOR B 3.0 i Cat	C30NE	01/88 ⇨ 09/93

FACET 2.7530/30PHT — 07

DISTRIBUTOR CAPS

Adatt./Suitable: ***BOSCH***

BOSCH
1 235 522 408 *A
1 235 522 447
RENAULT
74 33 501 944
VOLVO
3501944 *A
35019447 *A

*A **Available distributor cap only not screen**
- Fornita solo calotta, no copertura
- Disponible seulement la tete et non pas le couvrcle
- Erhältlich nur die kappe, nicht die haube
- Disponible solo la tapa, no la copertura

RENAULT		
SAFRANE II 2.5 20V	N7U700, N7U701	07/96 ⇨ 12/00
VOLVO		
850 2.0	B5202S, B5204F, B5204FS	06/91 ⇨ 12/96
850 2.0 10V	B5202FS	08/94 ⇨ 12/97
850 2.0 Turbo	B5204FT, B5204T, B5204T2	02/93 ⇨ 10/97
850 2.3	B5234FS	01/96 ⇨ 10/96
850 2.3 T5	9M9T872	02/93 ⇨ 12/96
850 2.3 T5-R	B5234T4	08/95 ⇨ 12/96
850 2.3 Turbo R	B5234T5	06/95 ⇨ 10/97
850 2.4	B5252, B5252FS, B5254S	06/91 ⇨ 12/96
850 2.4 AWD	B5254T	04/96 ⇨ 12/96
850 2.4 GLE	B5254T	09/93 ⇨ 10/97
850 2.5 10V	B5252FS	06/91 ⇨ 12/97
850 2.5 20V	B5254FS	08/91 ⇨ 12/97
C70 I 2.0	B5204T2	03/97 ⇨ 10/05
C70 I 2.0 T	B5204T3	03/97 ⇨ 10/05
C70 I 2.3 T5	B5234T3	03/98 ⇨ 10/05
C70 I 2.3 T-5	B5234T3	03/97 ⇨ 09/02
C70 I 2.4 T	B5254T	03/97 ⇨ 10/05
S70 2.0	B5202FS, B5202S, B5204T2	01/97 ⇨ 11/00
S70 2.0 Turbo	B5204T3	01/97 ⇨ 11/00
S70 2.3	B5234FS, B5234T7	01/97 ⇨ 07/99
S70 2.3 AWD	B5234T7	04/99 ⇨ 09/00
S70 2.3 T-5	B5234T3	01/97 ⇨ 11/00
S70 2.3 T5 AWD	B5234T4	07/97 ⇨ 09/00
S70 2.3 T5-R AWD	B5234T2	11/96 ⇨ 09/98
S70 2.3 Turbo	B5234FT+	01/97 ⇨ 11/00
S70 2.4	B5254S	06/98 ⇨ 11/00
S70 2.4 AWD	B5252FS	11/96 ⇨ 05/99
S70 2.4 Bifuel	GB5252S	10/98 ⇨ 11/00
S70 2.4 T5 AWD	B5254T	11/96 ⇨ 04/99
S70 2.4 Turbo	B5254T	01/97 ⇨ 11/00
S70 2.5 20V	B5254FS	01/97 ⇨ 12/98
S70 2.5 Bifuel	GB5252S2	01/99 ⇨ 12/99
V70 I 2.0	B5202FS, B5202S, B5204T2	12/95 ⇨ 03/00
V70 I 2.0 Turbo	B5204T3	11/96 ⇨ 12/00
V70 I 2.0 Turbo AWD	B5204T3	11/96 ⇨ 12/00
V70 I 2.3	B5234FS	01/97 ⇨ 07/99
V70 I 2.3 AWD	B5234T3, B5234T7	04/97 ⇨ 09/98
V70 I 2.3 T AWD	B5234FT+, B5234T4, B5234T6	04/97 ⇨ 12/98
V70 I 2.3 T-5	B5234T3	11/96 ⇨ 12/00
V70 I 2.3 T-5 AWD	B5234T3	01/97 ⇨ 12/00
V70 I 2.3 Turbo	B5234FT+, B5234T2, B5234T4	12/95 ⇨ 12/98
V70 I 2.4	B5252FS, B5254S	12/95 ⇨ 12/99
V70 I 2.4 Bifuel	GB5252S	05/98 ⇨ 12/99
V70 I 2.4 Turbo AWD	B5254T	04/96 ⇨ 12/00
V70 I 2.5	B5252FS	01/97 ⇨ 03/00
V70 I 2.5 20V	B5254FS	01/97 ⇨ 12/99
V70 I 2.5 Bifuel	GB5252S2	01/99 ⇨ 12/99

FACET 2.7530/31PHT — 04

DISTRIBUTOR CAPS

Adatt./Suitable: ***BOSCH***

BOSCH
1 235 522 372

00 **Eliminated on 14-04-2020. Please verify the availability through our local distributors**
- Eliminato il 14-04-2020. Verificare la disponibilità presso i nostri distributori
- Eliminé le 14-04-2020. Verifier la disponibilité auprès de nos distributeurs sur place
- Am 14-04-2020 gestrichen. Evtl. Verfügbarkeit bitte bei unseren Händlern prüfen
- Eliminado en fecha 14-04-2020. Verificar la disponibilidad a través de nuestros distribuidores locales

FACET 2.7530/33PHT — 05

DISTRIBUTOR CAPS

Adatt./Suitable: ***BOSCH***

BOSCH
1 235 522 453
1 235 522 454 *A
SEAT
037 905 207
VW
037 905 207 *A

*A **Available distributor cap only not screen**
- Fornita solo calotta, no copertura
- Disponible seulement la tete et non pas le couvrcle
- Erhältlich nur die kappe, nicht die haube
- Disponible solo la tapa, no la copertura

SEAT		
CORDOBA I 2.0 i 16V	ABF	08/96 ⇨ 06/99
IBIZA II 2.0 i 16V	ABF	08/96 ⇨ 08/99
TOLEDO I 2.0 i 16V	ABF	11/93 ⇨ 03/99
VW		
GOLF III 2.0 GTI 16V	ABF	08/92 ⇨ 08/97
PASSAT III 2.0 16V	ABF	01/94 ⇨ 05/97

FACET 2.7530/36PHT — 07

DISTRIBUTOR CAPS

Adatt./Suitable: ***BOSCH***

AUDI
027 905 207 A
051 905 207
BOSCH
0 290 004 019
1 230 591 040
1 235 522 375
1 235 522 444
SEAT
027 905 207 A
051 905 207
VW
027 905 207 A
051 905 207

AUDI		
80 II 1.6	SA	02/86 ⇨ 07/86
80 II 1.8	SF	02/86 ⇨ 07/86
80 II 1.8 GTE	DZ, MU, PV	06/84 ⇨ 03/87
80 III 1.4	SE	08/86 ⇨ 07/88
80 III 1.6	ABB, PP, RN, RNA	09/86 ⇨ 10/91
80 III 1.8	RU, SD	09/86 ⇨ 01/90
80 III 1.8 E	DZ	06/86 ⇨ 08/91
80 III 1.8 S	JN, JV, NE, PM, SF	08/86 ⇨ 10/91
80 III 2.0	AAD	10/90 ⇨ 08/91
80 III 2.0 E	3A	08/88 ⇨ 10/90
80 IV 1.6	ABB, ABM	09/91 ⇨ 12/94
80 IV 1.6 E	ADA	06/93 ⇨ 01/96
80 IV 2.0	ABT	09/91 ⇨ 01/96
80 IV 2.0 E	ABK	09/91 ⇨ 01/96
80 IV 2.0 quattro	ADW	11/93 ⇨ 01/96
100 III 1.8	NP, SH	02/86 ⇨ 12/90
100 III 1.8 Cat	4B, PH	03/85 ⇨ 11/90
100 IV 1.6	ABB	03/92 ⇨ 07/93
100 IV 2.0	AAE	12/90 ⇨ 07/94
100 IV 2.0 E	AAD, AAE, ABK	12/90 ⇨ 07/94
A6 I 2.0	AAE, ABK, ADW	06/94 ⇨ 12/97
A4 I 1.6	ADP	11/94 ⇨ 09/01
CABRIOLET 2.0 E	ABK	01/93 ⇨ 07/98
COUPE 1.8	DZ	08/89 ⇨ 07/91
COUPE 2.0	3A, AAD, ABK	05/89 ⇨ 12/96
SEAT		
CORDOBA I 1.0 16V	AST, AVZ	05/00 ⇨ 10/02
CORDOBA I 1.0 CL	AAU	02/93 ⇨ 06/96
CORDOBA I 1.3	AAV	02/93 ⇨ 08/94
CORDOBA I 2.0 i	AGG	02/93 ⇨ 06/99
IBIZA II 1.0 16V	AST, AVZ	10/99 ⇨ 02/02
IBIZA II 1.3 i	8C20HD0D	03/93 ⇨ 08/99
INCA 1.4 i	AEX, AKV, APQ	11/95 ⇨ 06/03
INCA 1.6 i	1F, AEE	11/95 ⇨ 05/98
ALHAMBRA I / II 2.0 i	ADY	04/96 ⇨ 03/10
TOLEDO I 1.6 i	1F, AFT	05/91 ⇨ 03/99
TOLEDO I 1.8 i	ADZ, RP	05/91 ⇨ 12/96
TOLEDO I 2.0 i	AGG	05/91 ⇨ 03/99
VW		
PASSAT IV 1.6	ADP	10/96 ⇨ 11/00
POLO II 1.0	AAU, HZ	01/85 ⇨ 09/94
POLO II 1.0 Cat	AAU, ACM	08/89 ⇨ 09/94
POLO II 1.3	3F	10/90 ⇨ 09/94
POLO II 1.3 Cat	2G, 3F, AAV	07/87 ⇨ 09/94
POLO II 1.3 G40	PY	08/90 ⇨ 09/94
JETTA II 1.0	HZ	08/85 ⇨ 10/91
JETTA II 1.3 Cat	2G, NZ	06/87 ⇨ 12/91
JETTA II 1.6	ABN, EZ, EZA, HM, PN, RF	12/83 ⇨ 07/92
JETTA II 1.8	EV, GU, GX, PB, RD, RV	01/84 ⇨ 10/91
JETTA II 1.8 16V	KR, PL	08/86 ⇨ 10/91
JETTA II 1.8 Cat	GX, PF, RP	01/87 ⇨ 10/91
JETTA II 1.8 G60	PG	04/90 ⇨ 07/91
JETTA II 1.8 Syncro	GU, RP	08/87 ⇨ 12/88
JETTA II 1.8i GT	GZ	12/83 ⇨ 07/88
CADDY I 1.8	JH	08/85 ⇨ 07/92
CADDY II 1.6	1F	11/95 ⇨ 05/97
CADDY II 75 1.6	1F	11/95 ⇨ 05/97
CORRADO 1.8 16V	KR	04/89 ⇨ 07/92

VW		
CORRADO 1.8 G60	PG	09/88 ⇨ 09/93
CORRADO 2.0 i	2E, ADY	04/93 ⇨ 12/95
CORRADO 2.0 i 16V	7TZ220XS560	08/91 ⇨ 12/95
GOLF I 1.6	EW, HN	08/83 ⇨ 04/92
GOLF I 1.8	2H, DX, EX, JH, KT	08/82 ⇨ 04/93
GOLF II 1.0	HZ	08/85 ⇨ 10/91
GOLF II 1.3 Cat	2G, NZ	06/86 ⇨ 12/92
GOLF II 1.6	ABN, EZ, PN, RF	08/83 ⇨ 12/92
GOLF II 1.6 [CHE] [SWE]	HM	08/86 ⇨ 07/88
GOLF II 1.6 G	EZA, PN	08/86 ⇨ 07/91
GOLF II 1.8	GU, GX, RV	08/84 ⇨ 10/91
GOLF II 1.8 [CHE] [SWE]	HV	08/86 ⇨ 07/87
GOLF II 1.8 GTI	EV, PB, RD	08/83 ⇨ 10/91
GOLF II 1.8 GTI 16V	KR, PL	02/86 ⇨ 10/91
GOLF II 1.8 GTI Cat	PF	01/87 ⇨ 10/91
GOLF II 1.8 GTI G60	PG	04/90 ⇨ 07/91
GOLF II 1.8 GTI G60 Syncro	PG	08/88 ⇨ 12/91
GOLF II 1.8 i	RP	08/87 ⇨ 07/91
GOLF II 1.8 i Cat	GX, RP	08/87 ⇨ 10/91
GOLF II 1.8 i Cat Syncro	RP	08/87 ⇨ 10/91
GOLF II 1.8 Syncro	3E82, GU	02/86 ⇨ 07/91
GOLF II 1.8i GTI [CHE] [SWE]	GZ	08/86 ⇨ 07/87
GOLF II 1.8i GTI [SWE]	GZ	08/87 ⇨ 07/88
PASSAT III 1.6	1F, ABN, AEK, AFT, EZ	04/88 ⇨ 08/96
PASSAT III 1.8	AAM, ABS, ADZ, KR, PB, PF, RP	02/88 ⇨ 05/97
PASSAT III 1.8 16V	KR	04/88 ⇨ 12/89
PASSAT III 1.8 GL	KR	08/91 ⇨ 09/93
PASSAT III 2.0	2E, ADY, AEP, AGG	02/90 ⇨ 05/97
PASSAT III 2.0 16V	7TZ220XS560	08/88 ⇨ 09/93
PASSAT III 2.0 Syncro	2E, ADY, AGG	03/90 ⇨ 12/96
PASSAT III 2.0i	ACX	08/92 ⇨ 12/96
GOLF III 1.4	ABD	10/91 ⇨ 04/99
GOLF III 1.6	ABU, AEK, AFT, AKS	09/92 ⇨ 04/99
GOLF III 1.8	AAM, ABS, ADZ	08/91 ⇨ 04/99
GOLF III 1.8 Syncro	ABS, ADZ	01/93 ⇨ 04/99
GOLF III 2.0	2E, ADY, AEP, AGG, AKR	11/91 ⇨ 04/99
GOLF III 2.0 GL	AEP	08/95 ⇨ 09/97
GOLF III 2.0 Syncro	AGG	08/95 ⇨ 04/99
GOLF IV 1.6	AFT, AKS	06/98 ⇨ 06/02
GOLF IV 1.8	AAM, ADZ, ANN, ANP	06/98 ⇨ 06/02
GOLF IV 2.0	AGG, AKR, ATU, AWF, AWG	06/98 ⇨ 06/02
POLO III 1.6	AFT	05/97 ⇨ 09/01
POLO III 100 1.6	AFT	12/95 ⇨ 09/01
POLO III 2.0	ADC	08/99 ⇨ 09/01
POLO III 75 1.6	1F	11/95 ⇨ 09/97
POLO III 90 1.8	ADD	01/97 ⇨ 09/01
SCIROCCO II 1.6	EW, EWA, HN, RE	01/83 ⇨ 07/90
SCIROCCO II 1.8	DX, EX, JH, KT	08/82 ⇨ 07/92
SCIROCCO II 1.8 16V	KR, PL	10/85 ⇨ 07/92
SHARAN I 2.0	ADY	09/95 ⇨ 03/10
TRANSPORTER IV 1.8	5K7M710	12/90 ⇨ 07/92
TRANSPORTER IV 2.0	AAC	07/90 ⇨ 04/03
VENTO 1.6	AEK, AFT, AKS	10/94 ⇨ 02/99

FACET 2.7535/1PHT

04

DISTRIBUTOR CAPS

Adatt./Suitable: ***CAJAVEC***

YUGO
4660870

ZASTAVA
4660870

ZASTAVA		
101 1.1	128A.000	06/73 ⇨ 01/90
YUGO 0.9	9A	04/80 ⇨ 06/92

FACET 2.7566PHT

04

DISTRIBUTOR CAPS

Adatt./Suitable: ***DELCO REMY***

OPEL
12 12 140

VOLVO
3277854
32778540

[03] **Supplied until depletion**
- Fornibile fino ad esaurimento delle scorte
- Fourni jusqu'à épuisement du stock
- Lieferbar solange vorrat reicht
- Suministrado hasta el stock termina

OPEL		
CORSA A 1.0	10S	09/82 ⇨ 03/93
KADETT B 1.1	11N	08/71 ⇨ 08/73
KADETT D 1.0	10N	09/79 ⇨ 08/82
KADETT E 1.2	12SC	09/84 ⇨ 07/86

FACET 2.7573PHT

07

DISTRIBUTOR CAPS

Adatt./Suitable: ***DELCO REMY***

DELCO REMY
1 972 927
D-340

GENERAL MOTORS
01 972 927
1 972 927

OPEL
01972927
12 11 258

[03] **Supplied until depletion**
- Fornibile fino ad esaurimento delle scorte
- Fourni jusqu'à épuisement du stock
- Lieferbar solange vorrat reicht
- Suministrado hasta el stock termina

OPEL		
ASCONA C 1.3 N	13N	09/81 ⇨ 08/86
ASCONA C 1.6	16SV	09/86 ⇨ 08/88
ASCONA C 1.6 i Cat	C16LZ, C16NZ	09/86 ⇨ 08/88
ASTRA F 1.6 i	C16NZ	09/91 ⇨ 09/98
CORSA A 1.2	12S, 12ST	09/82 ⇨ 08/90
CORSA A 1.2 N	12NV	01/90 ⇨ 03/93
CORSA A 1.2 S	12S, 12ST	09/82 ⇨ 03/93
CORSA A 1.3	13NB, 13SB	09/85 ⇨ 10/89
CORSA A 1.3 GL	13S	09/82 ⇨ 03/93
CORSA A 1.3 S	13SB	09/82 ⇨ 10/89
KADETT D 1.2	12ST	08/82 ⇨ 08/84
KADETT E 1.3 i Cat	C13N	09/85 ⇨ 08/91
KADETT E 1.3 N	13N, 13NB	09/84 ⇨ 08/91
KADETT E 1.3 S	13S	09/84 ⇨ 02/93
KADETT E 1.6	16SV	09/86 ⇨ 12/91
KADETT E 1.6 i	16SV, C16NZ, E16NZ	09/86 ⇨ 07/94
KADETT E 1.6 i Cat	C16LZ, C16NZ	09/86 ⇨ 02/93
KADETT E 1.6 S	16SV	09/86 ⇨ 08/91
MANTA B 1.3 S	13S	08/81 ⇨ 08/86
VECTRA A 1.6 i	C16NZ, E16NZ, X16SZ	09/88 ⇨ 11/95
VECTRA A 1.6 i Cat	C16NZ	09/88 ⇨ 11/95
VAUXHALL		
ASTRA III 1.6 i	C16NZ	09/91 ⇨ 12/98
ASTRAVAN I 1.6 i	C16NZ	10/91 ⇨ 08/98

FACET 2.7574PHT

07

DISTRIBUTOR CAPS

Adatt./Suitable: ***DELCO REMY***

DELCO REMY
1 985 771

GENERAL MOTORS
01 985 771
1 985 771

OPEL
01985771
12 11 260

[00] **Eliminated on 22-02-2022. Please verify the availability through our local distributors**
- Eliminato il 22-02-2022. Verificare la disponibilità presso i nostri distributori
- Eliminé le 22-02-2022. Verifier la disponibilité auprès de nos distributeurs sur place
- Am 22-02-2022 gestrichen. Evtl. Verfügbarkeit bitte bei unseren Händlern prüfen
- Eliminado en fecha 22-02-2022. Verificar la disponibilidad a través de nuestros distribuidores locales

OPEL		
ASCONA C 1.6	16SV	09/86 ⇨ 08/88
CORSA A 1.2	12S	09/82 ⇨ 08/90
CORSA A 1.2 S	12S	09/82 ⇨ 10/87
CORSA A 1.3	13NB	09/85 ⇨ 10/89
KADETT E 1.3 N	13N, 13NB	09/84 ⇨ 08/91
KADETT E 1.3 S	13S	09/84 ⇨ 02/93
KADETT E 1.6	16SV	09/86 ⇨ 12/91
KADETT E 1.6 i	16SV	07/89 ⇨ 02/93
KADETT E 1.6 S	16SV	09/86 ⇨ 08/91

FACET 2.7575PHT

07

DISTRIBUTOR CAPS

Adatt./Suitable: ***DELCO REMY***

BOSCH
F 005 X04 443
F 005 X04 444

DAEWOO
10467543
10496278

HOLDEN
10457153
10496278

ISUZU
8-10496278-0

[03] **Supplied until depletion**
- Fornibile fino ad esaurimento delle scorte
- Fourni jusqu'à épuisement du stock
- Lieferbar solange vorrat reicht
- Suministrado hasta el stock termina

DAEWOO		
ARANOS 1.5	V15L	01/95 ⇨ 11/97
ARANOS 1.8	Y18L	01/95 ⇨ 11/97
ARANOS 2.0	Y20L	01/95 ⇨ 11/97
ESPERO 1.5 16V	A15MF	02/95 ⇨ 06/99
ESPERO 1.8	C18LE	02/95 ⇨ 06/99
ESPERO 2.0	C20LE	02/95 ⇨ 06/99
NEXIA 1.5	G15MF	02/95 ⇨ 08/97
NEXIA 1.5 16V	A15MF	02/95 ⇨ 08/97
HOLDEN		
ASTRA_LD 1.6i	16LE	07/87 ⇨ 07/89
ASTRA_LD 1.8i Hatchback	18LE	07/87 ⇨ 07/89
ASTRA_LD 1.8i Sedan	18LE	07/87 ⇨ 07/89
CAMIRA 1.8 SPFi	6TZ204XS85K01	02/86 ⇨ 03/87

HOLDEN		
CAMIRA 2.0 i	C20JE	04/87 ⇨ 07/89
ISUZU		
IMPULSE 1.6i [USA]	RLK	01/90 ⇨
IMPULSE 1.8i [USA]	RLX	01/91 ⇨
STYLUS 1.6i DOHC [USA]	RLK	01/90 ⇨ 12/91
STYLUS 1.6i SOHC [USA]	RLR	01/90 ⇨
STYLUS 1.8i DOHC [USA]	RLX	01/91 ⇨

FACET 2.7592 — 04

DISTRIBUTOR CAPS

Adatt./Suitable: ***DENSO***

GENERAL MOTORS
94 216 730
HOLDEN
8942167300
TOYOTA
19101-15010

[03] **Supplied until depletion**
- Fornibile fino ad esaurimento delle scorte
- Fourni jusqu'à épuisement du stock
- Lieferbar solange vorrat reicht
- Suministrado hasta el stock termina

HOLDEN		
GEMINI_RB 1.5	4XC1	04/85 ⇨ 06/87

FACET 2.7593 — 04

DISTRIBUTOR CAPS

Adatt./Suitable: ***DENSO***

BOSCH
F 005 X04 427
DAIHATSU
19101-2507
19101-25070-000
HOLDEN
3332160A10
3332175110
ISUZU
8-94129202-0
8-94219202-0
OPEL
42 94 009
SUZUKI
33321-60A10
33321-60A10-000
33321-75110
33321-75110-000
TOYOTA
19101-25070
19101-38011

HOLDEN		
DROVER QB 1.3	G13A	02/85 ⇨ 12/87
JACKAROO_UBS 2.2 4x4	4ZD1	03/87 ⇨ 10/88
RODEO_KB 2.3	2.25	03/87 ⇨ 07/88
RODEO_KB 2.3 4x4	2.25	03/87 ⇨ 07/88
SCURRY_NB 1.0	F10A	10/85 ⇨ 05/86
SHUTTLE_WFR 2.0	4ZC1	06/86 ⇨ 06/89
OPEL		
MIDI 2.0 i	20PET	09/92 ⇨ 08/94
MIDI 2.0 i 4x4	20PET	09/92 ⇨ 08/94
SUZUKI		
SAMURAI 1.3 Trazione integrale	G13A	11/88 ⇨ 12/04
SIDEKICK 1.6i [USA]	--	01/89 ⇨ 12/91
SJ410 1.0	F10A	09/81 ⇨ 07/91
SJ413 1.3	G13A	09/84 ⇨ 08/90
SUPER CARRY 1.0	F10A	10/85 ⇨ 03/99
VITARA I 1.6 8V	--	01/90 ⇨ 12/98

TOYOTA		
STARLET 1.3 [USA]	4KE	01/82 ⇨ 12/84

FACET 2.7594 — 05

DISTRIBUTOR CAPS

Adatt./Suitable: ***DENSO***

BOSCH
F 005 X04 426
DAIHATSU
19101-87703
19101-87703-000
FIAT
553221201
6553221201
INNOCENTI
6553221201

[03] **Supplied until depletion**
- Fornibile fino ad esaurimento delle scorte
- Fourni jusqu'à épuisement du stock
- Lieferbar solange vorrat reicht
- Suministrado hasta el stock termina

DAIHATSU		
CHARADE III 1.0	CB23, CB22	03/87 ⇨ 02/93
INNOCENTI		
500 L; LS	--	⇨ 12/86
SMALL 990	--	07/90 ⇨ 12/92

FACET 2.7599 — 07

DISTRIBUTOR CAPS

Adatt./Suitable: ***DENSO***

BOSCH
F 005 X04 496
TOYOTA
19101-35020
19101-35120
19101-35140
19101-35180
19101-35190
19101-38210
VW
J19 101 351 80

[03] **Supplied until depletion**
- Fornibile fino ad esaurimento delle scorte
- Fourni jusqu'à épuisement du stock
- Lieferbar solange vorrat reicht
- Suministrado hasta el stock termina

TOYOTA		
4 RUNNER 2.4 i [USA]	22RE	01/88 ⇨ 12/93
HILUX IV 2.4 4WD	22R	10/88 ⇨ 12/97
HILUX V 2.4 4WD	22R	10/88 ⇨ 08/97
HILUX V 2.4 i 4WD	22RE	01/89 ⇨ 07/97
LAND CRUISER 70 2.4	22R, 22RE	11/84 ⇨ 12/96
TRUCK 2.4 i [USA]	22R, 22RE	01/88 ⇨ 12/92
VW		
TARO 2.4 i 4x4	22R	06/89 ⇨ 03/97

FACET 2.7602 — 04

DISTRIBUTOR CAPS

Adatt./Suitable: ***DENSO***

SUZUKI
33321-79210
33321-79210-000

[03] **Supplied until depletion**
- Fornibile fino ad esaurimento delle scorte
- Fourni jusqu'à épuisement du stock
- Lieferbar solange vorrat reicht
- Suministrado hasta el stock termina

FACET 2.7607 — 04

DISTRIBUTOR CAPS

Adatt./Suitable: ***DENSO***

SUZUKI
33321-78110
33321-78110-000
33321-79611
33321-79611-000
33321-82010
33321-82010-000

[03] **Supplied until depletion**
- Fornibile fino ad esaurimento delle scorte
- Fourni jusqu'à épuisement du stock
- Lieferbar solange vorrat reicht
- Suministrado hasta el stock termina

MARUTI		
800 0.8	F8B	01/91 ⇨ 12/06
SUZUKI		
ALTO I 0.8	F8A, F8B	06/82 ⇨ 08/84

FACET 2.7613 — 07

DISTRIBUTOR CAPS

Adatt./Suitable: ***DENSO***

BOSCH
F 005 X04 503
TOYOTA
19101-71010
VW
J19 101 710 10

[03] **Supplied until depletion**
- Fornibile fino ad esaurimento delle scorte
- Fourni jusqu'à épuisement du stock
- Lieferbar solange vorrat reicht
- Suministrado hasta el stock termina

[211] **Resistance [kOhm] 15**
- Resistenza [kOhm] 15
- Résistance [kOhm] 15
- Widerstand [kOhm] 15
- Resistencia [kOhm] 15

TOYOTA		
DYNA 1.8	2Y	05/95 ⇨ 08/01
DYNA 2.0	3Y	05/95 ⇨ 10/01
DYNA 100 1.8	2Y	08/85 ⇨ 04/95
HILUX IV 1.8	2Y	08/83 ⇨ 03/89
HILUX IV 2.2	4Y	08/83 ⇨ 12/89
HILUX IV 2.2 4WD	4Y	11/85 ⇨ 12/89

TOYOTA		
HILUX V 1.8	2Y	09/88 ⇨ 06/98
LITEACE 2.2	4Y-EC	01/92 ⇨ 01/95
MODEL F 2.0	3Y	08/88 ⇨ 01/90
MODEL F 2.2	4Y-EC	08/85 ⇨ 01/90
VAN 2.0 [USA]	3YEC	01/83 ⇨ 12/90
VAN 2.2 [USA]	4YEC	01/83 ⇨ 12/90
VW		
TARO 1.8	2Y	04/89 ⇨ 09/94
TARO 2.2	4Y	06/89 ⇨ 07/94
TARO 2.2 4x4	4Y	06/89 ⇨ 07/94

FACET 2.7614

04

DISTRIBUTOR CAPS

Adatt./Suitable: ***DENSO***

TOYOTA
19101-71020

VW
J19 101 710 20

[03] **Supplied until depletion**
- Fornibile fino ad esaurimento delle scorte
- Fourni jusqu'à épuisement du stock
- Lieferbar solange vorrat reicht
- Suministrado hasta el stock termina

TOYOTA		
DYNA 1.6	1Y	05/85 ⇨ 08/87
DYNA 1.8	2Y	05/95 ⇨ 08/01
DYNA 100 1.8	2Y	08/85 ⇨ 04/95
DYNA 150 2.0	3Y	08/85 ⇨ 08/88
HIACE III 2.0	3Y	12/82 ⇨ 08/89
HIACE III 2.0 4WD	3Y	08/87 ⇨ 07/89
HIACE III 2.2	4Y	09/87 ⇨ 08/89
HIACE III 2.2 4WD	4Y	08/87 ⇨ 08/89
HILUX IV 1.8	2Y	08/83 ⇨ 03/89
HILUX IV 2.2	4Y	08/83 ⇨ 12/89
HILUX IV 2.2 4WD	4Y	11/85 ⇨ 12/89
HILUX V 1.8	2Y	09/88 ⇨ 06/98
LITEACE 1.5	5K	10/85 ⇨ 01/92
STOUT 2.2	4Y	04/88 ⇨ 02/00
VW		
TARO 1.8	2Y	04/89 ⇨ 09/94
TARO 2.2	4Y	06/89 ⇨ 07/94
TARO 2.2 4x4	4Y	06/89 ⇨ 07/94

FACET 2.7617

04

DISTRIBUTOR CAPS

Adatt./Suitable: ***DENSO***

BOSCH
1 987 233 120

MITSUBISHI
MD604411

[03] **Supplied until depletion**
- Fornibile fino ad esaurimento delle scorte
- Fourni jusqu'à épuisement du stock
- Lieferbar solange vorrat reicht
- Suministrado hasta el stock termina

MITSUBISHI		
VALLEY 2.0	4G63-T	09/92 ⇨ 10/94

FACET 2.7619

05

DISTRIBUTOR CAPS

Adatt./Suitable: ***DENSO***

BOSCH
F 005 X04 492
F 005 X04 521

TOYOTA
19101-01030
19101-16080
19101-16220

[03] **Supplied until depletion**
- Fornibile fino ad esaurimento delle scorte
- Fourni jusqu'à épuisement du stock
- Lieferbar solange vorrat reicht
- Suministrado hasta el stock termina

TOYOTA		
CELICA IV 1.6 GT	4A-GELC	08/87 ⇨ 08/89
CELICA IV 1.6 GT 16V	4A-GEL	09/85 ⇨ 08/89
CELICA IV 1.6 GTI 16V	4A-GEL	01/88 ⇨ 12/89
COROLLA V 1.6	4A-GELC	05/85 ⇨ 04/87
MR 2 I 1.6 16V	4A-GELC	11/84 ⇨ 06/90
MR 2 I 1.6 Supercharged	4A-GZE	08/86 ⇨ 12/89

FACET 2.7622

07

DISTRIBUTOR CAPS

Adatt./Suitable: ***DENSO***

GENERAL MOTORS
94 404 560

ISUZU
8-94404560-0

TOYOTA
19101-11010

[03] **Supplied until depletion**
- Fornibile fino ad esaurimento delle scorte
- Fourni jusqu'à épuisement du stock
- Lieferbar solange vorrat reicht
- Suministrado hasta el stock termina

[211] **Resistance [kOhm] 15**
- Resistenza [kOhm] 15
- Résistance [kOhm] 15
- Widerstand [kOhm] 15
- Resistencia [kOhm] 15

TOYOTA		
CELICA IV 1.6	4A-L	04/86 ⇨ 08/89
COROLLA VI 1.3	2E	05/87 ⇨ 06/92
COROLLA VI 1.3 i	2E, 2E-E	08/87 ⇨ 06/92
STARLET 1.3 12V	2E, 2E-E	12/89 ⇨ 12/92
STARLET 1.3 12V Cat	2E-E	12/89 ⇨ 03/96
STARLET 1.3 XL	2E	12/89 ⇨ 12/91
TERCEL 1.5	--	01/86 ⇨

FACET 2.7623

04

DISTRIBUTOR CAPS

Adatt./Suitable: ***DENSO***

GENERAL MOTORS
96 066 464

SUBARU
33321-63B10

SUZUKI
33321-63B10
33321-63B10-000
33321-86510
33321-86510-000

SUBARU		
JUSTY II 1.3i	G13BA	05/96 ⇨ 09/00
SUZUKI		
ALTO IV 1.0	G10BB	09/94 ⇨ 06/02
ALTO V 1.0	G10BB	01/00 ⇨ 06/02
SWIFT I / II / III 1.3	G13A, G13B, G13BA	03/89 ⇨ 10/96
SWIFT I / II / III 1.3 4WD	G13A	03/89 ⇨ 12/91
SWIFT I / II / III 1.3 GTi SOHC	G13B	10/89 ⇨ 12/95
SWIFT I / II / III 1.3 i	G13BA	09/91 ⇨ 10/96
SWIFT I / II / III 1.3i SOHC [USA]	--	01/89 ⇨ 12/94
SWIFT I / II / III 1.6 i 16V	G16BA	08/92 ⇨ 10/96
SWIFT I / II / III 1.6 i 16V 4x4	G16BA	08/92 ⇨ 10/96
SIDEKICK 1.6 JX 4x4	G16A(8V)	04/89 ⇨ 04/96
SIDEKICK 1.6i 16V JX 4x4	G16B	04/89 ⇨ 04/96
SWIFT III 1.3 [USA]	--	06/95 ⇨ 05/01
SWIFT III 1.3 i	G13BA	06/96 ⇨ 03/01
VITARA I 1.6	G16A(8V), G16B	07/88 ⇨ 03/98
VITARA I 1.6 i 16V	G16B	07/90 ⇨ 03/99
VITARA I 1.6 i 16V Trazione integrale	G16B	07/90 ⇨ 03/98
VITARA I 1.6 Trazione integrale	G16A(8V)	07/88 ⇨ 03/98

FACET 2.7628

04

DISTRIBUTOR CAPS

Adatt./Suitable: ***DENSO***

DAIHATSU
19101-87207-000

[00] **Eliminated on 14-04-2021. Please verify the availability through our local distributors**
- Eliminato il 14-04-2021. Verificare la disponibilità presso i nostri distributori
- Eliminé le 14-04-2021. Verifier la disponibilité auprès de nos distributeurs sur place
- Am 14-04-2021 gestrichen. Evtl. Verfügbarkeit bitte bei unseren Händlern prüfen
- Eliminado en fecha 14-04-2021. Verificar la disponibilidad a través de nuestros distribuidores locales

DAIHATSU		
CUORE II 0.8	ED10	09/85 ⇨ 12/90
CUORE II 0.8 4WD	ED10	09/86 ⇨ 10/88
DOMINO 0.8	ED	08/85 ⇨ 07/90
MIRA 847	--	01/87 ⇨

FACET 2.7630/10 — 04

DISTRIBUTOR CAPS

Adatt./Suitable: *DENSO*

BOSCH
1 987 233 101
TOYOTA
19101-10020

[00] **Eliminated on 02-08-2021. Please verify the availability through our local distributors**
- Eliminato il 02-08-2021. Verificare la disponibilità presso i nostri distributori
- Eliminé le 02-08-2021. Verifier la disponibilité auprès de nos distributeurs sur place
- Am 02-08-2021 gestrichen. Evtl. Verfügbarkeit bitte bei unseren Händlern prüfen
- Eliminado en fecha 02-08-2021. Verificar la disponibilidad a través de nuestros distribuidores locales

TOYOTA		
STARLET 1.0	1E	12/89 ⇨ 12/92

FACET 2.7630/11 — 04

DISTRIBUTOR CAPS

Adatt./Suitable: *DENSO*

SUBARU
22162-KA010

[03] **Supplied until depletion**
- Fornibile fino ad esaurimento delle scorte
- Fourni jusqu'à épuisement du stock
- Lieferbar solange vorrat reicht
- Suministrado hasta el stock termina

SUBARU		
E-SERIES 1.0	--	01/87 ⇨ 12/92
E-SERIES 1.2	--	01/87 ⇨ 12/92

FACET 2.7630/15 — 04

DISTRIBUTOR CAPS

Adatt./Suitable: *DENSO*

BOSCH
1 987 233 128
GENERAL MOTORS
96 061 557
SUZUKI
33321-85570
33321-85570-000

SUZUKI		
SWIFT I / II / III 1.0 i	G10	03/89 ⇨ 12/05
WAGON R III 1.0	Z10XEP	06/04 ⇨ 08/05
WAGON R+ II 1.0	K10A	08/00 ⇨ 07/03

SUZUKI		
WAGON R+ II 1.0 XT Plus	--	08/00 ⇨ 07/01

FACET 2.7630/18 — 07

DISTRIBUTOR CAPS

Adatt./Suitable: *DENSO*

TOYOTA
19101-16250

[03] **Supplied until depletion**
- Fornibile fino ad esaurimento delle scorte
- Fourni jusqu'à épuisement du stock
- Lieferbar solange vorrat reicht
- Suministrado hasta el stock termina

TOYOTA		
COROLLA VI 1.6 GTi	4A-GE	08/87 ⇨ 10/94

FACET 2.7630/21 — 07

DISTRIBUTOR CAPS

Adatt./Suitable: *DENSO*

BOSCH
F 005 X12 276
TOYOTA
19101-88363

[00] **Eliminated on 06-08-2020. Please verify the availability through our local distributors**
- Eliminato il 06-08-2020. Verificare la disponibilità presso i nostri distributori
- Eliminé le 06-08-2020. Verifier la disponibilité auprès de nos distributeurs sur place
- Am 06-08-2020 gestrichen. Evtl. Verfügbarkeit bitte bei unseren Händlern prüfen
- Eliminado en fecha 06-08-2020. Verificar la disponibilidad a través de nuestros distribuidores locales

TOYOTA		
CELICA V 2.0	3S-GE	09/89 ⇨ 01/94
CELICA V 2.0 4WD	3S-GTE	10/89 ⇨ 01/94
CELICA V 2.0 GTi	3S-GE	10/89 ⇨ 11/93
MR 2 II 2.0 16V	3S-GE	12/89 ⇨ 09/99
MR 2 II 2.0 Turbo	3S-GTE	12/89 ⇨ 07/99

FACET 2.7630/22 — 07

DISTRIBUTOR CAPS

Adatt./Suitable: *DENSO*

TOYOTA
19101-76010

[03] **Supplied until depletion**
- Fornibile fino ad esaurimento delle scorte
- Fourni jusqu'à épuisement du stock
- Lieferbar solange vorrat reicht
- Suministrado hasta el stock termina

TOYOTA		
PREVIA I 2.4	2TZ-FE	05/90 ⇨ 08/00
PREVIA I 2.4 4WD	2TZ-FE, 2TZ-FZE	01/90 ⇨ 12/99

FACET 2.7630/24 — 05

DISTRIBUTOR CAPS

Adatt./Suitable: *DENSO*

BOSCH
F 005 X12 274
OPEL
43 00 976

[03] **Supplied until depletion**
- Fornibile fino ad esaurimento delle scorte
- Fourni jusqu'à épuisement du stock
- Lieferbar solange vorrat reicht
- Suministrado hasta el stock termina

HOLDEN		
RODEO_TF 2.2	4ZD1	03/91 ⇨ 08/93
OPEL		
CAMPO 2.3	23P	08/94 ⇨ 09/96

FACET 2.7630/26 — 07

DISTRIBUTOR CAPS

Adatt./Suitable: *DENSO*

BOSCH
F 005 X12 302
SUZUKI
33321-80C10
33321-80C10-000

[03] **Supplied until depletion**
- Fornibile fino ad esaurimento delle scorte
- Fourni jusqu'à épuisement du stock
- Lieferbar solange vorrat reicht
- Suministrado hasta el stock termina

SUZUKI		
ALTO IV 1.0	G10BB	09/94 ⇨ 06/02
ALTO V 1.0	G10BB	01/00 ⇨ 06/02
SAMURAI 1.3	G13BA	11/88 ⇨ 03/98
SAMURAI 1.3 Trazione integrale	G13A, G13BA	01/00 ⇨ 12/04

FACET 2.7630/27 — 05

DISTRIBUTOR CAPS

Adatt./Suitable: ***DENSO***

BOSCH
F 005 X12 272
DAIHATSU
19101-87601-000

[03] **Supplied until depletion**
- Fornibile fino ad esaurimento delle scorte
- Fourni jusqu'à épuisement du stock
- Lieferbar solange vorrat reicht
- Suministrado hasta el stock termina

DAIHATSU		
FEROZA 1.6 16V	HD-C	10/88 ⇨ 12/99
FEROZA 1.6 16V 4x4	HD-C	10/88 ⇨ 12/99
FEROZA 1.6 i 16V	HD-E	10/88 ⇨ 12/99
FEROZA 1.6 i 16V 4x4	HD-E	10/88 ⇨ 12/99
FEROZA 1.6i	--	01/90 ⇨
ROCKY 2.0i [USA]	--	01/89 ⇨
SPORTRACK 1.6 16v 4x4	HD-C	10/88 ⇨ 08/93

FACET 2.7630/28 — 04

DISTRIBUTOR CAPS

Adatt./Suitable: ***DENSO***

BOSCH
F 005 X04 522
DAIHATSU
19101-87103-000
19101-87105-000

[03] **Supplied until depletion**
- Fornibile fino ad esaurimento delle scorte
- Fourni jusqu'à épuisement du stock
- Lieferbar solange vorrat reicht
- Suministrado hasta el stock termina

DAIHATSU		
APPLAUSE I 1.6 16V	HD, HD-E	06/89 ⇨ 07/97
APPLAUSE I 1.6 16V 4WD	HD-E	06/89 ⇨ 07/97
CHARADE III 1.3	HC-C	09/88 ⇨ 01/92
CHARADE III 1.3i [USA]	HC-E	01/89 ⇨

FACET 2.7630/29 — 07

DISTRIBUTOR CAPS

Adatt./Suitable: ***DENSO***

SUBARU
22162-KA100

[00] **Eliminated on 03-02-2020. Please verify the availability through our local distributors**
- Eliminato il 03-02-2020. Verificare la disponibilità presso i nostri distributori
- Eliminé le 03-02-2020. Verifier la disponibilité auprès de nos distributeurs sur place
- Am 03-02-2020 gestrichen. Evtl. Verfügbarkeit bitte bei unseren Händlern prüfen
- Eliminado en fecha 03-02-2020. Verificar la disponibilidad a través de nuestros distribuidores locales

SUBARU		
JUSTY 1.2i EMPI [USA]	--	01/91 ⇨

FACET 2.7630/32 — 07

DISTRIBUTOR CAPS

Adatt./Suitable: ***DENSO***

DAIHATSU
19101-1516
19101-15160-000
TOYOTA
19101-15140
19101-15160

[03] **Supplied until depletion**
- Fornibile fino ad esaurimento delle scorte
- Fourni jusqu'à épuisement du stock
- Lieferbar solange vorrat reicht
- Suministrado hasta el stock termina

[211] **Resistance [kOhm] 15**
- Resistenza [kOhm] 15
- Résistance [kOhm] 15
- Widerstand [kOhm] 15
- Resistencia [kOhm] 15

TOYOTA		
CARINA II 1.6	4A-FE	12/87 ⇨ 03/92
CELICA V 1.6	4A-FE	09/89 ⇨ 12/93
COROLLA VI 1.6	4A-FE	08/89 ⇨ 04/92
COROLLA VI 1.6 i	4A-FE	05/87 ⇨ 05/92
COROLLA VI 1.6 i 4WD	4A-FE	10/87 ⇨ 08/90
COROLLA VI 1.6 XLI	4A-FE	11/89 ⇨ 06/92
HIACE III 1.8	2Y	12/82 ⇨ 07/89

FACET 2.7630/35 — 07

DISTRIBUTOR CAPS

Adatt./Suitable: ***DENSO***

BOSCH
F 005 X04 526
HOLDEN
1910111060
TOYOTA
19101-11060

[211] **Resistance [kOhm] 15**
- Resistenza [kOhm] 15
- Résistance [kOhm] 15
- Widerstand [kOhm] 15
- Resistencia [kOhm] 15

HOLDEN		
NOVA_LF 1.8i Hatchback	7AFE	08/91 ⇨ 03/93
NOVA_LF 1.8i Sedan	7AFE	08/91 ⇨ 03/93
NOVA_LG 1.6i Hatchback	4AFE	09/94 ⇨ 09/96
NOVA_LG 1.6i Sedan	4AFE	09/94 ⇨ 09/96
NOVA_LG 1.8i Hatchback	7AFE	09/94 ⇨ 09/96
NOVA_LG 1.8i Sedan	7AFE	09/94 ⇨ 09/96
TOYOTA		
AVENSIS I 1.6	4A-FE	09/97 ⇨ 10/00
CARINA E 1.6	4A-FE	04/92 ⇨ 09/97
CARINA E 1.6 16V	4A-FE	12/94 ⇨ 09/97
CARINA E 1.6 GLI	4A-FE	04/92 ⇨ 09/97
CARINA E 1.6 i	4A-FE	02/95 ⇨ 09/97
COROLLA VII 1.3 XLI	4E-FE	07/92 ⇨ 04/97
COROLLA VII 1.3 XLI 16V	4E-FE	07/92 ⇨ 09/95
COROLLA VII 1.6 GLI	4A-FE	07/92 ⇨ 04/97
COROLLA VII 1.6 Si	4A-FE	07/92 ⇨ 04/97
COROLLA VII 1.8 16V 4WD	7A-FE	09/95 ⇨ 04/97
COROLLA VII 1.8 GT	7A-FE	11/92 ⇨ 05/95
COROLLA VIII 1.6	4A-FE	04/97 ⇨ 02/00
COROLLA VIII 1.6 Aut.	4A-FE	04/97 ⇨ 02/00
COROLLA VIII 1.8 4WD	7A-FE	04/97 ⇨ 10/01
CELICA VI 1.8 i 16V	7A-FE	11/93 ⇨ 11/99
CELICA VI 1.8 i 16V [USA] [CAN]	7A-FE	09/93 ⇨ 08/99
PASEO 1.5	5E-FE	06/90 ⇨ 06/99
STARLET 1.3	4E-FE	01/96 ⇨ 07/99

FACET 2.7630/37 — 07

DISTRIBUTOR CAPS

Adatt./Suitable: ***DENSO***

BOSCH
1 987 233 106
HOLDEN
1910174180
TOYOTA
19101-74180

[03] **Supplied until depletion**
- Fornibile fino ad esaurimento delle scorte
- Fourni jusqu'à épuisement du stock
- Lieferbar solange vorrat reicht
- Suministrado hasta el stock termina

[211] **Resistance [kOhm] 15**
- Resistenza [kOhm] 15
- Résistance [kOhm] 15
- Widerstand [kOhm] 15
- Resistencia [kOhm] 15

HOLDEN		
APOLLO 2.2 i	08GR-FXS	03/93 ⇨ 05/97
TOYOTA		
CAMRY 2.2	5S-FE	06/91 ⇨ 07/96

TOYOTA		
CARINA E 2.0	3S-FE	01/93 ⇨ 09/97
CARINA E 2.0 GLI	3S-FE	04/92 ⇨ 09/97
CARINA E 2.0 GTi	3S-GE	04/92 ⇨ 12/95
CARINA E 2.0 GTi 16V	3S-GE	03/94 ⇨ 09/97
CARINA E 2.0 i	3S-FE	12/92 ⇨ 09/97
CELICA V 2.2	5S-FE	10/89 ⇨ 12/94
FUNCRUISER 2.0 i 16V 4WD	3SFE	04/94 ⇨
MR 2 II 2.2 16V	5S-FE	01/90 ⇨ 06/95
CELICA VI 2.2 GT	5S-FE	11/93 ⇨ 08/99
RAV 4 I 2.0	3S-FE	06/97 ⇨ 09/99
RAV 4 I 2.0 4WD	3S-FE	01/94 ⇨ 06/00

FACET 2.7630/42

07

DISTRIBUTOR CAPS

Adatt./Suitable: ***DENSO***

BOSCH
F 005 X12 899
TOYOTA
19101-66010

[00] **Eliminated on 22-02-2022. Please verify the availability through our local distributors**

- Eliminato il 22-02-2022. Verificare la disponibilità presso i nostri distributori
- Eliminé le 22-02-2022. Verifier la disponibilité auprès de nos distributeurs sur place
- Am 22-02-2022 gestrichen. Evtl. Verfügbarkeit bitte bei unseren Händlern prüfen
- Eliminado en fecha 22-02-2022. Verificar la disponibilidad a través de nuestros distribuidores locales

TOYOTA		
4 RUNNER 3.0	3VZ-E	08/88 ⇨ 10/95
LAND CRUISER 80 4.5	1FZ-FE	08/92 ⇨ 01/98
LAND CRUISER 80 4.5 24V	1FZ-FE	08/92 ⇨ 12/97

FACET 2.7630/43

07

DISTRIBUTOR CAPS

Adatt./Suitable: ***DENSO***

BOSCH
F 005 X12 270
TOYOTA
19101-35010
VW
J19 101 350 10

[00] **Eliminated on 06-09-2021. Please verify the availability through our local distributors**

- Eliminato il 06-09-2021. Verificare la disponibilità presso i nostri distributori
- Eliminé le 06-09-2021. Verifier la disponibilité auprès de nos distributeurs sur place
- Am 06-09-2021 gestrichen. Evtl. Verfügbarkeit bitte bei unseren Händlern prüfen
- Eliminado en fecha 06-09-2021. Verificar la disponibilidad a través de nuestros distribuidores locales

[03] **Supplied until depletion**

- Fornibile fino ad esaurimento delle scorte
- Fourni jusqu'à épuisement du stock
- Lieferbar solange vorrat reicht
- Suministrado hasta el stock termina

TOYOTA		
4 RUNNER 2.4 i [USA]	22RE	01/89 ⇨ 12/93
HILUX IV 2.4 4WD	22R	10/88 ⇨ 12/97
HILUX V 2.4 4WD	22R	10/88 ⇨ 08/97
HILUX V 2.4 i 4WD	22RE	01/89 ⇨ 07/97
TRUCK 2.4 i [USA]	22RE	01/92 ⇨
VW		
TARO 2.4 i 4x4	22R	06/89 ⇨ 03/97

FACET 2.7630/45

07

DISTRIBUTOR CAPS

Adatt./Suitable: ***DENSO***

BOSCH
1 987 233 107
TOYOTA
19101-11300

[211] **Resistance [kOhm] 15**

- Resistenza [kOhm] 15
- Résistance [kOhm] 15
- Widerstand [kOhm] 15
- Resistencia [kOhm] 15

TOYOTA		
COROLLA VII 1.3 12V	2E	07/92 ⇨ 04/97
COROLLA VIII 1.3	2E	05/97 ⇨ 10/01
STARLET 1.0	1E	12/89 ⇨ 12/92
STARLET 1.3 12V	2E, 2E-E	12/89 ⇨ 12/92
STARLET 1.3 12V Cat	2E-E	12/89 ⇨ 03/96
TERCEL 1.5 i [USA]	3EE	01/93 ⇨

FACET 2.7630/48

07

DISTRIBUTOR CAPS

Adatt./Suitable: ***DENSO***

BOSCH
F 005 X04 527
HOLDEN
1910115120
1910174050
TOYOTA
19101-11032
19101-15120
19101-74050
19101-75040

[211] **Resistance [kOhm] 15**

- Resistenza [kOhm] 15
- Résistance [kOhm] 15
- Widerstand [kOhm] 15
- Resistencia [kOhm] 15

HOLDEN		
APOLLO 2.0	3S-FC	08/89 ⇨ 08/91
NOVA_LE 1.4 Hatchback	6AFC	07/89 ⇨ 07/91
NOVA_LE 1.6 Hatchback	4AFC	07/89 ⇨ 07/91
NOVA_LE 1.6 Sedan	4AFC	07/89 ⇨ 07/91
TOYOTA		
CARINA II 1.6	4A-F	12/87 ⇨ 08/90
COROLLA VI 1.3	2E	05/87 ⇨ 06/92
COROLLA VI 1.3 i	2E, 2E-E	08/87 ⇨ 06/92
COROLLA VI 1.6	4A-F	05/87 ⇨ 12/92
COROLLA VI 1.6 4WD	4A-F	08/87 ⇨ 08/89
COROLLA VI 1.6 GL 4WD	4A-F	10/87 ⇨ 08/90
COROLLA VI 1.6 XL	4A-F	09/89 ⇨ 04/92
HIACE IV 2.0	1RZ	08/89 ⇨ 08/04
HIACE IV 2.4	5YTD050W07	08/89 ⇨ 08/03
HIACE IV 2.4 4WD	5YTD050W07	08/89 ⇨ 08/95

FACET 2.7641

04

DISTRIBUTOR CAPS

Adatt./Suitable: ***DUCELLIER***

DUCELLIER
72 196
662 434
GENERAL MOTORS
7 992 272
RENAULT
08 54 719 900
77 01 019 886
77 01 022 175

[00] **Eliminated on 04-10-2021. Please verify the availability through our local distributors**

- Eliminato il 04-10-2021. Verificare la disponibilità presso i nostri distributori
- Eliminé le 04-10-2021. Verifier la disponibilité auprès de nos distributeurs sur place
- Am 04-10-2021 gestrichen. Evtl. Verfügbarkeit bitte bei unseren Händlern prüfen
- Eliminado en fecha 04-10-2021. Verificar la disponibilidad a través de nuestros distribuidores locales

[03] **Supplied until depletion**

- Fornibile fino ad esaurimento delle scorte
- Fourni jusqu'à épuisement du stock
- Lieferbar solange vorrat reicht
- Suministrado hasta el stock termina

RENAULT		
4 0.8	800, 800705	10/62 ⇨ 09/83

FACET 2.7645 — 04

DISTRIBUTOR CAPS

Adatt./Suitable: ***DUCELLIER***

BOSCH
1 235 522 805
1 235 522 806
1 235 525 806

CITROËN
54 524 19Z
DX 211-215A
GX 061 800 1A

FIAT
9920029
9921198
9934549
9935176

RENAULT
77 01 012 957

TALBOT
3065 2H
3888 0
4613 6

[03] **Supplied until depletion**
- Fornibile fino ad esaurimento delle scorte
- Fourni jusqu'à épuisement du stock
- Lieferbar solange vorrat reicht
- Suministrado hasta el stock termina

[1006] **After depletion of stock this part is replaced by:**
- Esaurite le scorte questo pezzo sarà sostituito da:
- Après épuisement du stock, cette pièce est remplaceé par:
- Nach Vorraterschöpfung wird ersetzt durch:
- Despues agotamiento stock, sera sustituido por:

2.7658PHT

FIAT		
242 1.6	124B3.000	10/75 ⇨ 07/82
FIORINO I 900	100GL.000	10/77 ⇨ 10/86

FACET 2.7649PHT — 04

DISTRIBUTOR CAPS

Adatt./Suitable: ***DUCELLIER***

ALFA ROMEO
700 291
60748373

BOSCH
1 235 522 803
1 235 525 803

CITROËN
DM 211-15

DUCELLIER
18 132
47 430
611 149

FIAT
9916116
9935177
9937592

LAND ROVER
RTC3295

PEUGEOT
5941 06
5941 08
5941 20

RENAULT
08 51 874 100
77 01 019 468
85 51 874 100

ROVER
GDC214

VOLVO
3100771
31007719
3277442
32774422
32774424

VW
028 905 207 C

[03] **Supplied until depletion**
- Fornibile fino ad esaurimento delle scorte
- Fourni jusqu'à épuisement du stock
- Lieferbar solange vorrat reicht
- Suministrado hasta el stock termina

ALFA ROMEO		
ALFASUD 1.2	AR30102	06/72 ⇨ 09/84
DACIA		
1210 1.2	--	01/69 ⇨
1310 1.3	810-02/-99	05/83 ⇨ 07/04
1410 1.4	--	01/69 ⇨ 12/79
ARO 10	--	01/72 ⇨ 12/80
FIAT		
128 1.1	128A.000	03/69 ⇨ 12/84
850 0.8	100G.000	07/64 ⇨ 10/72
RITMO I 1.3	149A3.000	11/83 ⇨ 08/85
RITMO II 75 1.5	138A2.000	09/85 ⇨ 12/88
PEUGEOT		
305 1.5	117(XR5S)	05/80 ⇨ 09/82
ROVER		
MINI 1.0	--	01/85 ⇨
MINI 1.3	--	01/85 ⇨

FACET 2.7654PHT — 04

DISTRIBUTOR CAPS

Adatt./Suitable: ***DUCELLIER***

ALFA ROMEO
705 559
60749869

CHRYSLER
83 300 122

CITROËN
95 534 910

DUCELLIER
661 450
661 822
661 822 E
662 165

FIAT
9937716

PEUGEOT
5941 23

RENAULT
77 01 020 784

VOLVO
3277417
32774176

ALFA ROMEO		
33 I 1.2	AR30585	06/83 ⇨ 12/89
33 I 1.3	AR30168, AR30586, AR30587	06/83 ⇨ 12/89
33 I 1.3 i.e.	AR30168	05/83 ⇨ 12/89
33 I 1.4	AR30587	01/84 ⇨ 12/88
33 I 1.5	AR30588	07/86 ⇨ 12/89
33 I 1.5 4x4	AR30508, AR30588	07/86 ⇨ 12/89
33 I 1.5 QV	AR30146, AR30508, AR30588	06/84 ⇨ 12/89
33 I 1.7	AR30550	01/86 ⇨ 06/90
33 I 1.7 QV	AR30550	03/88 ⇨ 12/89
ALFASUD 1.5 ti	AR30128	05/80 ⇨ 06/84
DACIA		
1410 1.4	--	01/80 ⇨
FIAT		
DUCATO I 1.8	169B	01/82 ⇨ 12/88
DUCATO I 2.0	170B, 170D, 170C(XN1T), XN1T	01/82 ⇨ 05/94
DUCATO I 2.0 4x4	170D	06/90 ⇨ 05/94
REGATA 1.1 60 , 60 L	138B.000	10/83 ⇨ 08/86
REGATA 1.6	149A.000	10/84 ⇨ 06/89
REGATA 70 1.3	138B2.000, 149A3.000	09/83 ⇨ 07/89
REGATA 85 1.6	149A.000	10/83 ⇨ 06/90
RITMO I 1.1	146A4.048	04/85 ⇨ 12/87
TALENTO 2.0	170B	03/89 ⇨ 03/94
LAND ROVER		
90 2.5 4x4	17H	09/85 ⇨ 08/90
110/127 2.5 4x4	17H	10/85 ⇨ 07/90
DEFENDER 2.25	--	01/87 ⇨
PEUGEOT		
504 1.8 Injection	KF5, KF6	07/68 ⇨ 02/71
505 1.8	105(XM7), 105C(XM7A)	06/81 ⇨ 10/86
505 2.0	106E(XN1A)	09/85 ⇨ 09/95
J5 1.8	169B(XM7T)	01/83 ⇨ 11/88
J9 1.6	XC7P	03/80 ⇨ 06/87
J9 2.0	XN1P	03/80 ⇨ 06/87
RENAULT		
4 0.8	800705	10/83 ⇨ 10/88
5 1.4 Alpine A5	840725	09/77 ⇨ 09/81
9 1.1	C1E715	09/81 ⇨ 05/87
11 1.1	C1E715, C1E720	03/83 ⇨ 06/86
19 I 1.4	C1J	01/89 ⇨ 12/92
20 2.0	829700, 829701, 829702, 829703, 829.01	10/77 ⇨ 12/83
CLIO I 1.1	C1E700	01/91 ⇨ 09/98
EXPRESS 1.1	C1E	01/85 ⇨ 10/90
EXPRESS 955	C1C	01/85 ⇨ 10/90
FUEGO 1.6 [USA] R1368	A7L752	01/82 ⇨ 12/84
MASTER I 2.0	829731	07/80 ⇨ 06/85
MASTER I 28-35 2.0	829731	08/80 ⇨ 10/86
RAPID 1.0	C1C706	09/85 ⇨ 05/92
RAPID 1.1	C1E750, C1E752, C1E754, C1E756, C1E760, C1E762, C1E764	07/85 ⇨ 10/97
SUPER 5 1.1	C1E752, C1E754, C1E756, C1E760	10/84 ⇨ 12/96
TRAFIC I 1.4	C1J700	03/80 ⇨ 06/91
TALBOT		
1307-1510 Simca 1307 1.3	--	07/75 ⇨ 01/80
SOLARA 1.3	2M102.979	02/80 ⇨ 07/86
TAGORA 2.1	5N2	06/80 ⇨ 12/83

FACET 2.7658PHT — 04

DISTRIBUTOR CAPS

Adatt./Suitable: ***DUCELLIER***

CITROËN
75 520 155
95 539 165

DUCELLIER
16 575
19 401
22 321
607 374
608 728
609 082
611 514
660 542
661 920
662 913

FEMSA
33829- 7

FIAT
9936735

FORD
A700X-12276-AGA
A770-X12276-CA
A830-X12276-FA

GENERAL MOTORS
7 992 617
7 992 857
93 150 379

LANCIA
9936735

PEUGEOT
5941 26

SEAT
000 993 673 5
SE 141914.001D

CITROËN		
AXEL 11	--, G11/631	01/84 ⇨ 03/91
BX 1.1	109LA, H1A	04/86 ⇨ 06/91
BX 1.4	150C, K1F, K2D	07/86 ⇨ 12/94
BX 1.4 E	150B(XY8), 150J, 150Y, K1F, KAZ	09/82 ⇨ 12/94
BX 1.6	B2C	02/88 ⇨ 12/94
BX 14	150C	01/86 ⇨ 02/93
BX 14 E	150A, 150C, K1G	10/82 ⇨ 02/93
BX 16	171A, 171B, 171C, 171D, BAY(XU5CP), BAZ(XU5CP)	10/82 ⇨ 12/94
C15 1.0	108C	10/84 ⇨ 07/88
C15 1.0 E	TU9K	11/92 ⇨ 07/96
C15 1.1	109K, E1A, XW7	10/84 ⇨ 12/96
C15 1.3	G1A	07/87 ⇨ 05/88
CX I 2000	829A5	06/79 ⇨ 08/85
CX II 20 RE	829A5	08/85 ⇨ 12/92
CX II 22 TRS	J6TA500	07/85 ⇨ 12/92
GS A 1.3	G13/625	07/78 ⇨ 07/86
LNA 1.1	109/5E	07/82 ⇨ 04/85

CITROËN		
VISA 11 E	109K	09/78 ⇨ 06/88
FIAT		
127 0.9	100GL.048	06/71 ⇨ 05/83
DUCATO I 2.0	170D	07/90 ⇨ 03/94
PANDA I 750	141B.000	01/86 ⇨ 01/95
PANDA I 800	100GL6.000	02/81 ⇨ 12/85
PANDA I 900	100GL3.000	10/80 ⇨ 06/94
PANDA I 900 CL	146A.048	01/86 ⇨ 04/91
UNO 45 0.9	146A.000, 146A1.000	03/83 ⇨ 07/96
UNO 45 0.9 Trend	146A.048	09/89 ⇨ 09/92
LANCIA		
A 112 0.9 Junior	A112A5.000	03/81 ⇨ 06/86
PEUGEOT		
104 0.9	108(XV5)	10/79 ⇨ 10/83
205 I 1.0	108C(XV8)	02/83 ⇨ 12/90
205 I 1.1	109F(XW7), 109N(XW7)	02/83 ⇨ 10/87
205 I 1.3	G1A	02/84 ⇨ 10/87
205 I 1.4	150(XY6B), 150B(XY8), 150D(XY7), 150G(XY7), 150H(XY8)	02/83 ⇨ 10/87
205 I 1.5	Y2/K	02/84 ⇨ 10/87
205 I 1.6	B1A(XU51C), B1E(XU51C), BAZ(XU5CP)	08/86 ⇨ 10/87
205 II 1.1	109N(XW7)	10/87 ⇨ 10/90
205 II 1.1 XA	E1	07/87 ⇨ 10/88
205 II 1.2	F1	01/87 ⇨ 12/90
205 II 1.3	G1A	08/90 ⇨ 07/92
205 II 1.4	150B(XY8), 150G(XY7), 150H(XY8)	10/87 ⇨ 05/89
205 II 1.4 CJ	150D(XY7), 150G(XY7)	03/88 ⇨ 05/89
205 II 1.4 CT	150B(XY8), 150H(XY8)	04/86 ⇨ 12/88
205 II 1.6	B1A(XU51C), B1E(XU51C), BAZ(XU5CP)	10/87 ⇨ 09/98
309 I 1.1	E1	10/85 ⇨ 07/89
309 I 1.3	G1A, G2S	10/85 ⇨ 08/89
309 I 1.3 XL	--	09/86 ⇨ 08/89
309 I 1.5	Y2/K	06/87 ⇨ 12/89
309 I 1.6	B1A(XU51C), B1D(XU51C), B1E(XU51C)	10/85 ⇨ 07/89
309 I 1.6 Cat	BAZ(XU5CP)	09/86 ⇨ 12/89
504 1.8	XM7	01/71 ⇨ 06/83
SEAT		
FURA 0.9	100GL3000	01/82 ⇨ 06/86
IBIZA I 0.9	146A000	08/86 ⇨ 05/93
PANDA 34 850	--	01/80 ⇨ 12/83
PANDA 35 850	--	01/80 ⇨ 12/83
TALBOT		
SAMBA 1.1	XW7	01/81 ⇨ 06/86

FACET 2.7659PHT

04

DISTRIBUTOR CAPS

Adatt./Suitable: ***DUCELLIER***

CHRYSLER
83 300 121
T1407311

CITROËN
54 656 04
54 656 04P
75 524 767
95 610 822

DUCELLIER
22 946
660 588
662 471
663 205
664 813

FIAT
9919037
9934545

PEUGEOT
5941 28

RENAULT
77 01 027 411
77 01 027 491

VOLVO
3213392
32133928
3287598
32875981

CITROËN		
CX I 2400	M23-623	08/76 ⇨ 06/80
CX I 2400 GTi	M23-622	06/77 ⇨ 06/83
FIAT		
124 1200	124A.000	07/66 ⇨ 10/73
124 1400 Special	124B2.000	12/68 ⇨ 12/72
124 1600 Special T	132AC.000	01/73 ⇨ 07/75
131 1.3 Mirafiori	131A6.000	10/74 ⇨ 09/81
132 1.6	132C.000	05/77 ⇨ 09/82
PEUGEOT		
505 2.0 TI, STI	829(ZEJ)	08/79 ⇨ 10/86
RENAULT		
5 1.4 Alpine Turbo	840726	10/81 ⇨ 01/85
9 1.2	C1G700, C1G710	09/85 ⇨ 12/88
11 1.2	C1G700, C1G710	10/84 ⇨ 12/88
11 1.4	C2J720, C2J766, C2J767, C2J768	03/83 ⇨ 12/88
18 1.4	847720, 847722	04/78 ⇨ 07/86
18 1.6 TS	A6M725, A6M726	05/82 ⇨ 07/86
18 2.0	J6R716	05/82 ⇨ 07/86
19 I 1.2	C1G730	01/88 ⇨ 12/92
19 I 1.4	C2J772, C2J776, C3J710	07/88 ⇨ 05/93
19 I 1.4 Cat	C3J710	01/89 ⇨ 04/92
19 II 1.4	C3J710	04/92 ⇨ 12/95
21 1.4	C2J770, C2L717	06/88 ⇨ 10/93
21 1.6	C2L	01/87 ⇨ 12/94
25 2.0	J6R706, J6R707	04/84 ⇨ 12/92
25 2.2	J7T706, J7T707	04/84 ⇨ 12/89
CLIO I 1.2	C3G720	06/94 ⇨ 02/98
ESPACE II 2.2	J7T772	01/91 ⇨ 10/96
ESPACE II 2.2 4x4	J7T772	03/91 ⇨ 12/96
EXPRESS 1.2	C1G	01/85 ⇨ 10/90
EXPRESS 1.4	C1J, C2J	01/85 ⇨ 10/90
EXPRESS 1.4i	C3G/C3J	01/85 ⇨ 10/90
FUEGO 1.6 [USA] R136A	A7L	01/82 ⇨ 12/86
FUEGO 1.6 [USA] R136B	A7L	01/84 ⇨ 12/86
SUPER 5 1.2	C1G702	01/87 ⇨ 12/96
SUPER 5 1.4	C2J798	10/84 ⇨ 07/89
SUPER 5 1.4 Turbo	C1J784	04/85 ⇨ 08/90
TWINGO I 1.2	C3G700, C3G702	03/93 ⇨ 10/96
VOLVO		
340-360 1.3	B13, B13.4E	08/88 ⇨ 12/90
340-360 1.4	B14.3E, B14.4E, B14.4ED, B14.40, B14.4S	08/82 ⇨ 07/91

FACET 2.7662PHT

05

DISTRIBUTOR CAPS

Adatt./Suitable: ***DUCELLIER***

DUCELLIER
666 592

[03] **Supplied until depletion**
- Fornibile fino ad esaurimento delle scorte
- Fourni jusqu'à épuisement du stock
- Lieferbar solange vorrat reicht
- Suministrado hasta el stock termina

[1246] **Alternative Repair Kit**
- Kit riparazione alternativo
- Kit de réparation alternative
- alternativer Reparatursatz
- Juego alternativo de reparación

2.7673PHT

RENAULT		
9 1.7	F2N700, F2N704, F2N708, F2N710, F2N730, F2N798, F3N708, F3N718	09/84 ⇨ 12/89
11 1.7	F2N700, F2N704, F2N708, F2N710, F2N730, F2N732, F2N742, F2N798, F3N718	10/83 ⇨ 12/88
VOLVO		
340-360 1.7	B172K	08/85 ⇨ 07/91

FACET 2.7663PHT

05

DISTRIBUTOR CAPS

Adatt./Suitable: ***DUCELLIER***

CHRYSLER
83 300 124

DUCELLIER
582 514
665 757

RENAULT
77 01 029 971
77 01 202 293

VOLVO
3342161
33421611

[03] **Supplied until depletion**
- Fornibile fino ad esaurimento delle scorte
- Fourni jusqu'à épuisement du stock
- Lieferbar solange vorrat reicht
- Suministrado hasta el stock termina

[111] **Paired article numbers**
- N° articolo appaiato
- Numéro d'article en paire
- paarige Artikelnummer
- Referencia artículo par

2.7673PHT

RENAULT		
11 1.7	F2N700	10/83 ⇨ 12/87
VOLVO		
340-360 1.7	B172K	08/85 ⇨ 07/91

FACET 2.7665PHT

05

DISTRIBUTOR CAPS

Adatt./Suitable: ***DUCELLIER***

CHRYSLER
83 300 123

DUCELLIER
664 369

[03] **Supplied until depletion**
- Fornibile fino ad esaurimento delle scorte
- Fourni jusqu'à épuisement du stock
- Lieferbar solange vorrat reicht
- Suministrado hasta el stock termina

[111] **Paired article numbers**
- N° articolo appaiato
- Numéro d'article en paire
- paarige Artikelnummer
- Referencia artículo par

2.7666PHT

RENAULT		
21 2.0	14ZR, 8CPD, J6R758, J6R759, J6R793, J7R747, J7R750, J7R751	03/86 ⇨ 12/93
21 2.2	J7T754, J7T755	04/86 ⇨ 06/94
21 2.2 4x4	J7T754, J7T755	06/86 ⇨ 06/94
ESPACE II 2.0	J7R768	01/91 ⇨ 10/96
ESPACE II 2.2	J7T772, J7T773, J7T776	01/91 ⇨ 10/96
TRAFIC I 2.2	J7T600, J7T780	05/89 ⇨ 04/98
TRAFIC I 2.2 4x4	J7T600, J7T780	05/89 ⇨ 10/97

FACET 2.7666PHT — 05

DISTRIBUTOR CAPS

Adatt./Suitable: ***DUCELLIER***

RENAULT
77 00 730 116 *B
77 01 202 683 *M

*B **Available distributor cap and rotor, only-not the distributor assy**
- Forniti solo calotta e distributore rotante, no lo spinterogeno completo
- Disponibles seulement la tete et le rotor, non pas l'allumeur complet
- Erhältlich nur kappe und rotor, nicht der komplette verteiler
- Disponibles solo la tapa y el rotor, no el distribuidor completo

*M **Kit Distributor cap / Rotor**
- Kit Calotta / Distributore
- Kit Tête d'allumeur / Disrupteur
- Bausatz VerteilerKappe / -läufer
- Juego Tapa del distribuidor / Rotor

03 **Supplied until depletion**
- Fornibile fino ad esaurimento delle scorte
- Fourni jusqu'à épuisement du stock
- Lieferbar solange vorrat reicht
- Suministrado hasta el stock termina

216 **contains article number**
- contiene il numero articolo
- contient le numéro d'article
- beinhaltet Artikelnummer
- número de artículo incluido

2.7665PHT 3.7694

RENAULT		
21 2.0	14ZR, J6R758, J6R793, J7R747, J7R750, J7R751	03/86 ⇨ 12/93
21 2.0 4x4	14ZR, J7R747	03/89 ⇨ 12/93
21 2.2	J6T790, J6T791, J7T754, J7T755, J7T756	03/86 ⇨ 12/95
21 2.2 4x4	J7T754, J7T755	06/86 ⇨ 06/94
ESPACE II 2.0	J7R768	01/91 ⇨ 10/96
ESPACE II 2.2	J7T776	01/91 ⇨ 10/96
TRAFIC I 2.2	J7T600, J7T780	05/89 ⇨ 04/98
TRAFIC I 2.2 4x4	J7T600, J7T780	05/89 ⇨ 04/98

FACET 2.7667PHT — 04

DISTRIBUTOR CAPS

Adatt./Suitable: ***DUCELLIER***

CITROËN
95 618 396
DUCELLIER
667 287
PEUGEOT
5941 41

CITROËN		
BX 1.4	150C, K1F, K2D	07/86 ⇨ 12/94
BX 1.4 E	150B(XY8), 150J, 150Y, K1F, KAZ	09/82 ⇨ 12/94
BX 1.6	B2C	02/88 ⇨ 12/94
BX 1.9	159B, 159C, D6U, DKK	05/85 ⇨ 12/94
BX 1.9 GTi	D6D, D6K	01/87 ⇨ 01/92
BX 14	150C	01/86 ⇨ 02/93
BX 14 E	150A, 150C, K1G	10/82 ⇨ 02/93
BX 15	B1E(XU51C)	01/87 ⇨ 05/92
BX 16	171A, 171B, 171C, 171D, 23DH, B1E(XU51C), BAY(XU5CP), BAZ(XU5CP)	10/82 ⇨ 12/94
BX 19	159A, D2A(XU92C), D2C(XU92C), D2E, D6A(XU9J2), DKZ(XU9JA)	09/84 ⇨ 12/94
BX 19 Cat	DFZ(XU9J1)	07/86 ⇨ 12/94
BX 19 E 4x4	D2F	04/89 ⇨ 02/93
BX 19 GTi	D6A(XU9J2), DKZ(XU9JA)	07/86 ⇨ 02/93
BX 19 GTi 4x4	DKZ(XU9JA)	06/88 ⇨ 02/93
C15 1.4	150D(XY7)	05/87 ⇨ 10/92
C15 1.4 E	150D(XY7)	05/87 ⇨ 12/96

PEUGEOT		
205 I 1.0	108C(XV8)	10/87 ⇨ 12/90
205 I 1.1	109F(XW7), 109N(XW7)	02/83 ⇨ 10/87
205 I 1.4	150(XY6B), 150D(XY7), 150G(XY7)	02/83 ⇨ 10/87
205 I 1.6	B1A(XU51C), B1E(XU51C), BAZ(XU5CP)	08/86 ⇨ 10/87
205 I 1.9 GTI	DFZ(XU9J1)	03/87 ⇨ 10/87
205 II 1.1	109N(XW7)	10/87 ⇨ 10/90
205 II 1.4	150(XY6B), 150B(XY8), 150D(XY7), 150G(XY7)	01/87 ⇨ 05/89
205 II 1.4 CJ	150D(XY7), 150G(XY7)	03/88 ⇨ 05/89
205 II 1.6	B1A(XU51C), B1E(XU51C), BAZ(XU5CP)	10/87 ⇨ 09/98
205 II 1.9 CTI	DFZ(XU9J1)	10/87 ⇨ 12/94
205 II 1.9 GTI Cat	DFZ(XU9J1)	10/87 ⇨ 07/94
309 I 1.6	B1A(XU51C), B1D(XU51C), B1E(XU51C)	10/85 ⇨ 07/89
309 I 1.6 Cat	BAZ(XU5CP)	09/86 ⇨ 12/89
309 I 1.9	D2B(XU9S), DFZ(XU9J1), XU92C	10/85 ⇨ 07/89
309 II 1.9	XU92C	07/89 ⇨ 12/93
405 I 1.9	DFZ(XU9J1)	05/88 ⇨ 08/92
405 I 1.9 Antipollution	XU92C	01/87 ⇨ 12/92
405 I 1.9 Injection	DFZ(XU9J1)	07/87 ⇨ 12/92
405 I 1.9 Trazione integrale	DFZ(XU9J1)	09/88 ⇨ 07/92

FACET 2.7668PHT — 04

DISTRIBUTOR CAPS

Adatt./Suitable: ***DUCELLIER***

AUDI
026 905 207 A
DUCELLIER
666 349
SEAT
026 905 207 A
VW
026 905 207 A

AUDI		
80 II 1.6	DT	08/78 ⇨ 03/87
80 II 1.8	DS	01/83 ⇨ 08/86
80 III 1.4	SE	08/86 ⇨ 07/88
80 III 1.6	PP, RN, RNA	09/86 ⇨ 09/91
80 III 1.8	RU	10/86 ⇨ 01/90
80 III 1.8 S	NE	09/86 ⇨ 10/91
100 III 1.8	DS, NP	08/83 ⇨ 12/90
100 III 1.8 quattro	NP, SH	10/84 ⇨ 07/90
A4 I 1.6	ADP	11/94 ⇨ 09/01

SEAT		
CORDOBA I 1.6 i	1F	05/94 ⇨ 06/99
CORDOBA I 1.8 i	ABS, ACC, ADZ	02/93 ⇨ 09/02
IBIZA II 1.6 i	1F	09/94 ⇨ 06/99
IBIZA II 1.8 i	ABS, ACC, ADZ	03/93 ⇨ 08/99
INCA 1.4 i	AEX, AKV, APQ	11/95 ⇨ 06/03
INCA 1.6 i	1F, AEE	11/95 ⇨ 05/98
TOLEDO I 1.8 i	ADZ	11/93 ⇨ 12/96

VW		
PASSAT II 1.6	DT	08/80 ⇨ 03/88
PASSAT II 1.8	DS	01/83 ⇨ 03/88
PASSAT II 1.8 Syncro	DS	01/86 ⇨ 03/88
PASSAT IV 1.6	ADP	10/96 ⇨ 11/00
JETTA II 1.6	ABN, EZ, EZA, PN, RF	01/84 ⇨ 07/92
JETTA II 1.8	GU	08/84 ⇨ 10/91
JETTA II 1.8 Syncro	GU	08/87 ⇨ 12/88
CADDY II 1.6	1F	11/95 ⇨ 05/97
CADDY II 75 1.6	1F	11/95 ⇨ 05/97
GOLF I 1.6	EW	08/83 ⇨ 04/92
GOLF I 1.8	EX	08/83 ⇨ 09/92
GOLF II 1.6	ABN, EZ, PN, RF	08/83 ⇨ 12/92
GOLF II 1.6 G	EZA, PN	08/86 ⇨ 07/91
GOLF II 1.8	GU	08/84 ⇨ 10/91
GOLF II 1.8 Syncro	GU	02/86 ⇨ 07/91
GOLF III 1.6	AEK	07/94 ⇨ 04/99
GOLF III 1.8	AAM, ABS, ADZ	08/91 ⇨ 04/99
GOLF III 1.8 Syncro	ABS, ADZ	01/93 ⇨ 04/99
GOLF III 2.0	ADY, AEP, AGG, AKR	11/91 ⇨ 04/99
GOLF III 2.0 GL	AEP	08/95 ⇨ 09/97
GOLF IV 2.0	AGG, AKR	06/98 ⇨ 06/02
PASSAT III 1.6	AEK	07/94 ⇨ 08/96
PASSAT III 1.8	AAM, ABS, ADZ	02/88 ⇨ 05/97
POLO III 75 1.6	1F	11/95 ⇨ 09/97
SCIROCCO II 1.6	EW, EWA, RE	01/83 ⇨ 07/90
SCIROCCO II 1.8	EX	08/83 ⇨ 07/92
VENTO 1.6	AEK	10/94 ⇨ 09/98
VENTO 1.8	AAM, ABS, ADZ	11/91 ⇨ 09/98

FACET 2.7669PHT — 05

DISTRIBUTOR CAPS

Adatt./Suitable: ***DUCELLIER***

DUCELLIER
525 536 F
2 524 086
RENAULT
77 00 726 736
VOLVO
3342442
33424425
3342862
33428624

1246 **Alternative Repair Kit**
- Kit riparazione alternativo
- Kit de réparation alternative
- alternativer Reparatursatz
- Juego alternativo de reparación

2.7672PHT

RENAULT		
19 I 1.7	F2N720, F2N721, F2N722, F2N724, F3N740, F3N741, F3N742, F3N743, F3N746	07/88 ⇨ 12/92
19 II 1.7	F2N720, F2N721, F2N726, F2N727, F3N740, F3N741, F3N742, F3N743, F3N746	09/90 ⇨ 12/95
19 II 1.8	5F140FE, 8NA20S, F3P682, F3P704, F3P705, F3P706, F3P707, F3P708, F3P764, F3P765	04/92 ⇨ 06/96
21 1.7	F2N710, F2N711, F2N712, F2N722, F2N750, F2N752, F2N754, F2N758, F2N786, F3N722, F3N723, F3N726	03/86 ⇨ 12/95
21 1.7 Cat	F3N726	05/88 ⇨ 06/93
21 2.0	F2R702	09/89 ⇨ 12/91
CLIO I 1.7	F2N770	01/91 ⇨ 12/93
CLIO I 1.8	F3P710, F3P714, F3P754	01/91 ⇨ 09/98
CLIO I 1.8 Rsi	F3P712, F3P758	01/93 ⇨ 09/98
SUPER 5 1.7	F2N740, F2N742, F3N716, F3N717	10/86 ⇨ 03/95
SUPER 5 1.7 i	F3N702	10/86 ⇨ 08/91
TRAFIC I 1.7	F1N720	05/89 ⇨ 08/94

VOLVO		
440 1.6	B16F	09/88 ⇨ 12/96
440 1.7	B18E, B18EP, B18F, B18FP, B18K, B18KD, B18KP, B18KPD	08/88 ⇨ 12/96
440 1.7 Turbo	B18FT	08/88 ⇨ 12/96
440 1.8	B18U	08/91 ⇨ 12/96
440 2.0	B20F	08/92 ⇨ 07/96
460 1.6	B16F	07/92 ⇨ 07/96
460 1.7	B18EP, B18FP, B18K, B18KD, B18KP	09/88 ⇨ 07/96
460 1.7 Turbo	B18FT	08/89 ⇨ 07/96
460 1.8	B18U	08/91 ⇨ 07/96
460 2.0	B20F	08/92 ⇨ 07/96

VOLVO		
480 1.7	B18E, B18ED, B18EP, B18F, B18FP	04/86 ⇨ 07/96
480 1.7 Turbo	B18FT	08/87 ⇨ 07/96
480 2.0	B20F	08/92 ⇨ 09/95

FACET 2.7670 — 04

DISTRIBUTOR CAPS

Adatt./Suitable: ***DUCELLIER***

DUCELLIER
665 752
2 524 128

RENAULT
77 01 029 973

VOLVO
3342164
33421645
3342443
33424433
3342864
33428640

[111] Paired article numbers
- N° articolo appaiato
- Numéro d'article en paire
- paarige Artikelnummer
- Referencia artículo par

2.7672PHT 2.7673PHT

RENAULT		
CLIO I 1.8	F3P710, F3P714, F3P754	01/91 ⇨ 09/98

FACET 2.7671PHT — 05

DISTRIBUTOR CAPS

Adatt./Suitable: ***DUCELLIER***

[111] Paired article numbers
- N° articolo appaiato
- Numéro d'article en paire
- paarige Artikelnummer
- Referencia artículo par

2.7672PHT

VOLVO		
440 1.6	B16F	09/88 ⇨ 12/96
440 1.7	B18E, B18EP, B18F, B18FP, B18K, B18KD, B18KP, B18KPD	08/88 ⇨ 12/96
440 1.7 Turbo	B18FT	08/88 ⇨ 12/96
440 1.8	B18U	08/91 ⇨ 12/96
440 2.0	B20F	08/92 ⇨ 07/96
460 1.6	B16F	07/92 ⇨ 07/96
460 1.7	B18EP, B18FP, B18K, B18KD, B18KP	09/88 ⇨ 07/96
460 1.7 Turbo	B18FT	08/89 ⇨ 07/96
460 1.8	B18U	08/91 ⇨ 07/96
460 2.0	B20F	08/92 ⇨ 07/96
480 1.7	B18E, B18ED, B18EP, B18F, B18FP	04/86 ⇨ 07/96
480 1.7 Turbo	B18FT	08/87 ⇨ 07/96
480 2.0	B20F	08/92 ⇨ 09/95

FACET 2.7672PHT — 05

DISTRIBUTOR CAPS

Adatt./Suitable: ***DUCELLIER***

DUCELLIER
525 536 *M
525 536 B *M

RENAULT
77 00 102 012 *M
77 00 736 209 *M
77 00 851 781 *M

VOLVO
3342440 *M
33424409 *M

[*M] Kit Distributor cap / Rotor
- Kit Calotta / Distributore
- Kit Tête d'allumeur / Disrupteur
- Bausatz VerteilerKappe / -läufer
- Juego Tapa del distribuidor / Rotor

[216] contains article number
- contiene il numero articolo
- contient le numéro d'article
- beinhaltet Artikelnummer
- número de artículo incluido

2.7669PHT

RENAULT		
19 I 1.7	F2N720, F2N721, F2N722, F2N724, F3N740, F3N741, F3N742, F3N743, F3N746	07/88 ⇨ 12/92
19 II 1.7	F2N720, F2N721, F2N726, F2N727, F3N740, F3N741, F3N742, F3N743, F3N746	09/90 ⇨ 12/95
19 II 1.8	5F140FE, 8NA20S, F3P682, F3P704, F3P705, F3P706, F3P707, F3P708, F3P764, F3P765	04/92 ⇨ 06/96
21 1.7	F2N710, F2N711, F2N712, F2N722, F2N750, F2N752, F2N754, F2N758, F2N786, F3N722, F3N723, F3N726	03/86 ⇨ 12/95
21 1.7 Cat	F3N726	05/88 ⇨ 06/93
21 2.0	F2R702	09/89 ⇨ 12/91
CLIO I 1.7	F2N770	01/91 ⇨ 12/93
CLIO I 1.8	F3P710, F3P714, F3P754	01/91 ⇨ 09/98
CLIO I 1.8 Rsi	F3P712, F3P758	01/93 ⇨ 09/98
SUPER 5 1.7	F2N740, F2N742, F3N716, F3N717	10/86 ⇨ 03/95
SUPER 5 1.7 i	F3N702	10/86 ⇨ 08/91
TRAFIC I 1.7	F1N720	05/89 ⇨ 08/94

FACET 2.7673PHT — 05

DISTRIBUTOR CAPS

Adatt./Suitable: ***DUCELLIER***

DUCELLIER
525 409 D *M
666 203 *M
666 778 *M

RENAULT
77 00 733 982 *M

[*M] Kit Distributor cap / Rotor
- Kit Calotta / Distributore
- Kit Tête d'allumeur / Disrupteur
- Bausatz VerteilerKappe / -läufer
- Juego Tapa del distribuidor / Rotor

[03] Supplied until depletion
- Fornibile fino ad esaurimento delle scorte
- Fourni jusqu'à épuisement du stock
- Lieferbar solange vorrat reicht
- Suministrado hasta el stock termina

RENAULT		
11 1.7	F2N700	10/83 ⇨ 12/87

FACET 2.7674PHT — 04

DISTRIBUTOR CAPS

Adatt./Suitable: ***DUCELLIER***

CITROËN
95 624 985

DUCELLIER
2 524 134

PEUGEOT
5941 46

CITROËN		
AX 1.3 Sport	M4A	04/87 ⇨ 12/88
AX 10	C1A	09/86 ⇨ 06/92
AX 10 E	C3A	12/86 ⇨ 12/88
AX 11	H1A, H1B, HDZ(TU1M)	09/86 ⇨ 12/97
AX 11 4x4	H1A	06/91 ⇨ 07/92
AX 11 Cat	HAZ(TU1CP)	09/88 ⇨ 12/89
AX 14	K1A(TU3), K1B, K1F, K1G, K1J, K2A, K2B, K2D, KAY(TU3CP), KDX(TU3M/Z), KDY(TU3FM), KDY(TU3M), KDZ(TU3M/Z)	09/86 ⇨ 04/97
AX 14 4x4	KD4, KDX(TU3M/Z), KDY(TU3FM), KDY(TU3M), KDZ(TU3M/Z)	06/91 ⇨ 12/96
AX 14 GT	KDZ(TU3M/Z)	01/89 ⇨ 12/91
BX 1.1	109LA, H1A	04/86 ⇨ 06/91
BX 1.4	150C, K1F, K2D	07/86 ⇨ 12/94
BX 1.4 E	150B(XY8), 150J, 150Y, K1F, KAZ	09/82 ⇨ 12/94
BX 1.6	B2C	02/88 ⇨ 12/94
BX 1.9	159B, 159C, D6U, DKK	05/85 ⇨ 12/94
BX 1.9 GTi	D6D, D6K	01/87 ⇨ 01/92
BX 14	150C, KDY(TU3M), KDZ(TU3M/Z)	01/86 ⇨ 02/93
BX 14 E	150A, 150C, K1G	10/82 ⇨ 02/93
BX 15	B1E(XU51C)	01/87 ⇨ 05/92

CITROËN		
BX 16	171A, 171B, 171C, 171D, 23DH, B1E(XU51C), BAY(XU5CP), BAZ(XU5CP), BDY(XU5M), BDZ(XU5M)	10/82 ⇨ 12/94
BX 16 E	BDY(XU5M), BDZ(XU5M)	05/89 ⇨ 02/93
BX 19	159A, D2A(XU92C), D2C(XU92C), D2E, D6A(XU9J2), DDZ(XU9M), DKZ(XU9JA)	09/84 ⇨ 12/94
BX 19 4x4	DDZ(XU9M)	10/90 ⇨ 05/91
BX 19 Cat	DFZ(XU9J1)	07/86 ⇨ 12/94
BX 19 E	DDZ(XU9M)	06/88 ⇨ 02/93
BX 19 E 4x4	D2F	04/89 ⇨ 02/93
BX 19 GTi	D6A(XU9J2), DKZ(XU9JA)	07/86 ⇨ 02/93
BX 19 GTi 4x4	DKZ(XU9JA)	06/88 ⇨ 02/93
C15 1.0	108C(XV8), C1A, C1A(TU9/K), C1B(TU9/W), TU9	10/84 ⇨ 12/97
C15 1.1	H1A, HDZ(TU1M), TU1	08/88 ⇨ 07/96
C15 1.1 i	HDZ(TU1M), TU1MZ	07/88 ⇨ 12/96
C15 1.4	K1A, K1G, K1H(TU3A), KDY(TU3M)	07/87 ⇨ 12/96
C15 1.4 E	K1F, K1J, K2D, K3A, KAZ	07/86 ⇨ 12/96
C15 1.4 i	KDY(TU3FM), KDY(TU3M)	05/91 ⇨ 12/96
JUMPER I 2.0	XU102C	02/94 ⇨ 02/02
XM I 2.0	--	05/89 ⇨ 04/94
XM I 2.0 i	RDZ(XU10MZ), RFZ(XU10J2)	05/89 ⇨ 06/94
BERLINGO I 1.4	TU32	07/96 ⇨ 10/98
ZX 1.1	H1A, H1B, HDZ(TU1M), TU1	03/91 ⇨ 06/97
ZX 1.4 i	KDY(TU3M)	10/93 ⇨ 10/97
ZX 1.9	D6E(XU9JA)	03/91 ⇨ 06/97
ZX 1.9 i	DKZ(XU9JA), XU9JA	03/91 ⇨ 06/97
PEUGEOT		
106 I 1.0	TU9	09/91 ⇨ 03/01
106 I 1.1	H1B(TU1), HDZ(TU1M)	08/91 ⇨ 04/96
106 I 1.4	K5A(TU3), KDY(TU3M), TU3.2	08/91 ⇨ 04/96
106 II 1.1	H1B(TU1)	04/96 ⇨
205 I 1.4	TU3	01/83 ⇨ 12/90
205 I 1.6	B1A(XU51C), B1E(XU51C)	08/86 ⇨ 10/87
205 II 1.0	TU9	10/87 ⇨ 09/98
205 II 1.1	H1B(TU1), HDZ(TU1M)	10/87 ⇨ 09/98
205 II 1.1 CJ	HDZ(TU1M)	10/89 ⇨ 12/94
205 II 1.4	K1D(TU3A), K2B(TU3S), KDY(TU3M), KDZ(TU3M)	06/87 ⇨ 09/98
205 II 1.4 CJ	K1D(TU3A), KDY(TU3M)	03/89 ⇨ 12/94
205 II 1.6	B1A(XU51C), B1E(XU51C)	10/87 ⇨ 09/98
205 II 1.9 GTI	DKZ(XU9JAZ)	10/87 ⇨ 10/94
306 1.4	TU3	01/93 ⇨ 04/02
309 I 1.4	K1D(TU3A), K2B(TU3S), KDY(TU3M), KDZ(TU3M)	08/88 ⇨ 08/89
309 II 1.1	H1B(TU1), HDZ(TU1M)	09/89 ⇨ 12/93
309 II 1.4	KDZ(TU3M), TU3, TU3F2	07/89 ⇨ 12/93
309 II 1.6	18EM, BDZ(XU5M)	07/89 ⇨ 12/93
309 II 1.9	DDZ(XU9M), XU92C	07/89 ⇨ 12/93
309 II 1.9 GTI	DKZ(XU9JAZ)	07/89 ⇨ 12/93
405 I 1.4	K5A(TU3), TU3A, TU3F2	01/87 ⇨ 12/92
405 I 1.6	--, 18EM, B1E(XU51C), BDZ(XU5M)	01/87 ⇨ 12/92
405 I 1.6 4x4	BDZ(XU5M)	04/88 ⇨ 07/92
405 I 1.6 SRi 4x4	BDZ(XU5M)	04/88 ⇨ 07/92
405 I 1.9	D2C(XU92C), DDZ(XU9M), DKZ(XU9JAZ), XU9J2, XU9J2/D6D	01/87 ⇨ 12/92
405 I 1.9 4x4	DDZ(XU9M), DKZ(XU9JAZ)	06/87 ⇨ 12/92
405 II 1.4	TU3F2	01/93 ⇨ 12/96
405 II 1.6	18EM	08/92 ⇨ 05/97
405 II 1.9	XU92C	01/93 ⇨ 12/96
605 2.0	--, R5A(XU102C), XU10M	01/89 ⇨ 09/99

FACET 2.7675PHT

05

DISTRIBUTOR CAPS

Adatt./Suitable: ***DUCELLIER***

DUCELLIER
2 537 268

[03] Supplied until depletion
- Fornibile fino ad esaurimento delle scorte
- Fourni jusqu'à épuisement du stock
- Lieferbar solange vorrat reicht
- Suministrado hasta el stock termina

FACET 2.7677PHT

05

DISTRIBUTOR CAPS

Adatt./Suitable: ***DUCELLIER***

CITROËN
91 538 999
96 074 954

DUCELLIER
2 590 935

PEUGEOT
5941 45
5941 48

[00] Eliminated on 16-02-2022. Please verify the availability through our local distributors
- Eliminato il 16-02-2022. Verificare la disponibilità presso i nostri distributori
- Eliminé le 16-02-2022. Verifier la disponibilité auprès de nos distributeurs sur place
- Am 16-02-2022 gestrichen. Evtl. Verfügbarkeit bitte bei unseren Händlern prüfen
- Eliminado en fecha 16-02-2022. Verificar la disponibilidad a través de nuestros distribuidores locales

CITROËN		
BX 1.9 GTi 16V	159K, DFK	01/87 ⇨ 12/94
BX 19 GTi 16V	D6C(XU9J4), DFW(XU9J4)	09/87 ⇨ 02/93
PEUGEOT		
309 II 1.9 GTI 16V	D6C(XU9J4)	08/89 ⇨ 07/90
405 I 1.9	D6C(XU9J4)	06/87 ⇨ 07/92
405 I 1.9 4x4	D6C(XU9J4)	06/87 ⇨ 07/92
405 I 1.9 Sport MI-16	D6C(XU9J4), DFW(XU9J4Z)	06/87 ⇨ 11/92
405 I 1.9 SPort MI-16 4x4	DFW(XU9J4Z)	06/87 ⇨ 07/92
405 I 1.9 Trazione integrale	D6C(XU9J4)	06/87 ⇨ 07/92

FACET 2.7678PHT

05

DISTRIBUTOR CAPS

Adatt./Suitable: ***DUCELLIER***

CITROËN
91 539 003 *M
91 541 615 *M
96 038 183 *M
96 038 185 *M

DUCELLIER
2 525 628 *M
2 525 628 B *M

[00] Eliminated on 16-02-2022. Please verify the availability through our local distributors
- Eliminato il 16-02-2022. Verificare la disponibilità presso i nostri distributori
- Eliminé le 16-02-2022. Verifier la disponibilité auprès de nos distributeurs sur place
- Am 16-02-2022 gestrichen. Evtl. Verfügbarkeit bitte bei unseren Händlern prüfen
- Eliminado en fecha 16-02-2022. Verificar la disponibilidad a través de nuestros distribuidores locales

[*M] Kit Distributor cap / Rotor
- Kit Calotta / Distributore
- Kit Tête d'allumeur / Disrupteur
- Bausatz VerteilerKappe / -läufer
- Juego Tapa del distribuidor / Rotor

[216] contains article number
- contiene il numero articolo
- contient le numéro d'article
- beinhaltet Artikelnummer
- número de artículo incluido

2.7675PHT

CITROËN		
BX 1.9 GTi 16V	159K, DFK	01/87 ⇨ 12/94
BX 19 GTi 16V	D6C(XU9J4), DFW(XU9J4)	09/87 ⇨ 02/93
PEUGEOT		
309 II 1.9 GTI 16V	D6C(XU9J4)	08/89 ⇨ 07/90
405 I 1.9	D6C(XU9J4)	06/87 ⇨ 07/92
405 I 1.9 4x4	D6C(XU9J4)	06/87 ⇨ 07/92
405 I 1.9 Sport MI-16	D6C(XU9J4), DFW(XU9J4Z)	06/87 ⇨ 11/92
405 I 1.9 SPort MI-16 4x4	DFW(XU9J4Z)	06/87 ⇨ 07/92
405 I 1.9 Trazione integrale	D6C(XU9J4)	06/87 ⇨ 07/92

FACET 2.7679PHT — 04

DISTRIBUTOR CAPS

Adatt./Suitable: ***DUCELLIER***

DUCELLIER
667 308

[03] **Supplied until depletion**
- Fornibile fino ad esaurimento delle scorte
- Fourni jusqu'à épuisement du stock
- Lieferbar solange vorrat reicht
- Suministrado hasta el stock termina

PEUGEOT		
604 2.0 i	XN6	01/85 ⇨ 12/86
RENAULT		
18 2.0	J6R716	05/82 ⇨ 07/86
ESPACE I 2.0	53AZ-FXE, J6R234, J6R236	07/84 ⇨ 12/90
MASTER I 2.0	J5R718, J5R728	06/85 ⇨ 12/95
MASTER I 2.2	J7T788	08/93 ⇨ 02/98
MASTER I 28-35 2.0	J5R718	10/86 ⇨ 07/98
MASTER I 30 2.2	J7T782, J7T788	08/80 ⇨ 07/98
TRAFIC I 2.0	J5R716	05/89 ⇨ 08/90

FACET 2.7680PHT — 04

DISTRIBUTOR CAPS

Adatt./Suitable: ***DUCELLIER***

DUCELLIER
2 537 065

FIAT
9941721

LANCIA
9941721

FIAT		
PANDA I 1000	156A2.000	12/93 ⇨
PANDA I 1000 CLX	156A2.000	05/91 ⇨ 12/94
PANDA I 1000 Fire	156A2.000	05/86 ⇨ 04/91
PANDA I 750	156A4.000	01/86 ⇨ 10/03
PANDA I 750 Cat	156A4.048	01/95 ⇨ 10/03
PANDA I 750 Fire	156A4.048	11/88 ⇨ 04/91
TIPO I 1.1	160A3.000	01/88 ⇨ 10/91
UNO 45 1.0	156A2.000	09/89 ⇨ 09/92
UNO 45 1.0 Fire	--	01/83 ⇨ 12/89
UNO 60 1.1	160A3.000	04/89 ⇨ 12/92
LANCIA		
Y10 1.0 Fire Trazione integrale	156A2.000, 156A2.100, 156A2.246	12/86 ⇨ 02/92
Y10 1.1 i.e Fire	156C.000	08/89 ⇨ 06/92
Y10 1.1 i.e Fire Trazione integrale	156C.000	08/89 ⇨ 06/92

FACET 2.7681PHT — 04

DISTRIBUTOR CAPS

Adatt./Suitable: ***DUCELLIER***

RENAULT
77 01 033 621

RENAULT		
19 I 1.2i	E7F	01/89 ⇨ 12/92
19 I 1.4	E6J700, E6J701, E7J700	01/88 ⇨ 12/92
19 I 1.8 16V	F7P700, F7P704	06/89 ⇨ 09/92
19 II 1.2	E7F730	05/92 ⇨ 09/94
19 II 1.4	E6J706, E7J706, E7J707, E7J742, E7J745	01/92 ⇨ 12/95
19 II 1.8 16V	F7P704	04/92 ⇨ 06/96
25 2.0 12V	74AR-FXE, 7CYQD80D-E3, J7R721	06/88 ⇨ 12/93
CLIO I 1.2	E5F710, E5F716, E7F700, E7F706, E7F708, E7F750	05/90 ⇨ 09/98
CLIO I 1.4	E6J712, E6J713, E6J718, E7J601, E7J710, E7J711, E7J716, E7J718, E7J719, E7J754, E7J756, E7J757	01/90 ⇨ 09/98
CLIO I 1.8 16V	F7P720, F7P722	01/91 ⇨ 03/96
CLIO I Williams	F7R700	01/94 ⇨ 09/98
MEGANE I 1.4	E7J764	09/96 ⇨ 08/03
MEGANE I 1.4 e	E7J764	01/96 ⇨ 08/03
MEGANE I 1.4 Eco	E7J624	01/96 ⇨ 03/99
MEGANE SCÉNIC I 1.4 i	E7J764	01/97 ⇨ 09/99
RAPID 1.4	E6J738, E7J720, E7J724, E7J726, E7J728, E7J770, E7J771, E7J773	09/91 ⇨ 03/98
RAPID 1.4 RN	E6J734	09/91 ⇨ 08/93
SAFRANE I 2.0	0LJY, J7R732, J7R738, J7R739	08/92 ⇨ 09/96
SAFRANE I 2.0 12V	J7R734, J7R735	04/92 ⇨ 07/96
SAFRANE I 2.2	1MR479QB, J7T761, J7T762	04/92 ⇨ 07/96
TRAFIC I 2.0	J5R726	05/89 ⇨ 08/90
TRAFIC I 2.0 RWD	J5R726	05/89 ⇨ 10/97

FACET 2.7682PHT — 05

DISTRIBUTOR CAPS

Adatt./Suitable: ***DUCELLIER***

RENAULT
77 01 203 118

[111] **Paired article numbers**
- N° articolo appaiato
- Numéro d'article en paire
- paarige Artikelnummer
- Referencia artículo par

2.7683PHT

RENAULT		
21 2.0	J7R740	02/90 ⇨ 06/94
21 2.0 4x4	J7R740	12/89 ⇨ 02/94
21 2.0 Turbo	J7R752, J7R756	04/87 ⇨ 10/92
21 2.0 Turbo 4x4	J7R752, J7R756	08/89 ⇨ 10/93
21 2.0 TXi	1SCRMP10U1, J7R740	07/89 ⇨ 05/93
CLIO I 1.8 16V	F7P720, F7P722	01/91 ⇨ 03/96
CLIO I Williams	F7R700	01/94 ⇨ 09/98
SAFRANE I 2.0	0LJY, J7R732, J7R738, J7R739	08/92 ⇨ 09/96
SAFRANE I 2.0 12V	J7R734, J7R735	04/92 ⇨ 07/96

RENAULT		
SAFRANE I 2.2	1MR479QB, J7T761, J7T762	04/92 ⇨ 07/96

FACET 2.7683PHT — 05

DISTRIBUTOR CAPS

Adatt./Suitable: ***DUCELLIER***

DUCELLIER
2 525 645 A *B

RENAULT
77 00 739 893 *B
77 00 742 853 *B
77 00 743 290 *M
77 00 743 602 *M
77 01 203 118 *M

[*B] **Available distributor cap and rotor, only-not the distributor assy**
- Forniti solo calotta e distributore rotante, no lo spinterogeno completo
- Disponibles seulement la tete et le rotor, non pas l'allumeur complet
- Erhältlich nur kappe und rotor, nicht der komplette verteiler
- Disponibles solo la tapa y el rotor, no el distribuidor completo

[*M] **Kit Distributor cap / Rotor**
- Kit Calotta / Distributore
- Kit Tête d'allumeur / Disrupteur
- Bausatz VerteilerKappe / -läufer
- Juego Tapa del distribuidor / Rotor

RENAULT		
21 2.0	J7R740	02/90 ⇨ 06/94
21 2.0 4x4	J7R740	12/89 ⇨ 02/94
21 2.0 Turbo	J7R752, J7R756	04/87 ⇨ 10/92
21 2.0 Turbo 4x4	J7R752, J7R756	08/89 ⇨ 10/93
21 2.0 TXi	1SCRMP10U1, J7R740	07/89 ⇨ 05/93
25 2.0 12V	74AR-FXE, 7CYQD80D-E3, J7R721	06/88 ⇨ 12/93
CLIO I 1.8 16V	F7P720, F7P722	01/91 ⇨ 03/96
CLIO I Williams	F7R700	01/94 ⇨ 09/98
SAFRANE I 2.0	0LJY, J7R732, J7R738, J7R739	08/92 ⇨ 09/96
SAFRANE I 2.0 12V	J7R734, J7R735	04/92 ⇨ 07/96
SAFRANE I 2.2	1MR479QB, J7T761, J7T762	04/92 ⇨ 07/96

FACET 2.7684PHT — 07

DISTRIBUTOR CAPS

Adatt./Suitable: ***DUCELLIER***

GENERAL MOTORS
90 442 011

OPEL
12 11 275

[03] **Supplied until depletion**
- Fornibile fino ad esaurimento delle scorte
- Fourni jusqu'à épuisement du stock
- Lieferbar solange vorrat reicht
- Suministrado hasta el stock termina

OPEL		
ASTRA F 1.6	16LZ2, 16NZ2	09/94 ⇨ 09/98
ASTRA F 1.8 i	C18NZ	09/91 ⇨ 09/98
ASTRA F 2.0 i	C20NE	09/91 ⇨ 09/98
CALIBRA A 2.0 i	C20NE	08/89 ⇨ 12/96
CALIBRA A 2.0 i 4x4	C20NE	06/90 ⇨ 07/97
FRONTERA A 2.0 i	C20NE	03/92 ⇨ 10/98
KADETT E 1.8	18SE	01/86 ⇨ 08/91
KADETT E 1.8 i	C18NZ, S18NV	06/85 ⇨ 05/92

OPEL		
KADETT E 2.0 GSI	20NE, 20SEH	09/86 ⇨ 08/91
KADETT E 2.0 GSI Cat	C20NE	09/86 ⇨ 08/91
KADETT E 2.0 i	20NE	10/86 ⇨ 02/93
KADETT E 2.0 i Cat	C20NE	10/86 ⇨ 02/93
OMEGA A 1.8	18SEH, E18NVR, S18NV	09/86 ⇨ 03/94
OMEGA A 1.8 N	18NV	09/86 ⇨ 08/87
OMEGA A 1.8 S	18SV	09/86 ⇨ 03/94
OMEGA A 2.0	20SE, C20NE	09/86 ⇨ 04/94
OMEGA A 2.0 i	C20NE	09/86 ⇨ 04/94
OMEGA B 2.0	20SE	03/94 ⇨ 12/00
VECTRA A 1.6	C16LZ2	08/92 ⇨ 07/93
VECTRA A 1.6 i	C16NZ2	09/88 ⇨ 11/95
VECTRA A 1.6 i Cat	C16NZ2	09/88 ⇨ 11/95
VECTRA A 1.8 i	18SV	09/88 ⇨ 10/90
VECTRA A 1.8 i Cat	C18NZ	03/90 ⇨ 11/95
VECTRA A 1.8 S	18SV, E18NVR	09/88 ⇨ 10/90
VECTRA A 1.8 S 4x4	E18NVR	01/89 ⇨ 07/89
VECTRA A 2.0 i	20NE, 20SEH	09/88 ⇨ 09/92
VECTRA A 2.0 i 4x4	20NE, 20SEH	01/89 ⇨ 07/92
VECTRA A 2.0 i Cat	C20NE	09/88 ⇨ 11/95
VECTRA A 2.0 i Cat 4x4	C20NE	01/89 ⇨ 11/95
VECTRA A 2.0 i GT	20SEH	09/88 ⇨ 11/95
VECTRA B 1.6 i	16LZ2	10/95 ⇨ 07/03
VAUXHALL		
ASTRA III 1.8 i	C18NZ	09/91 ⇨ 09/98
ASTRA III 2.0 i	C20NE	09/91 ⇨ 09/98
CALIBRA 2.0 i	C20NE	06/90 ⇨ 07/97
CALIBRA 2.0 i 4x4	C20NE	06/90 ⇨ 07/97
FRONTERA A 2.0	C20NE	04/95 ⇨ 08/98
FRONTERA A 2.0 i	C20NE	03/92 ⇨ 10/98
OMEGA B 2.0	20SE	09/95 ⇨ 09/96

FACET 2.7685PHT

05

DISTRIBUTOR CAPS

Adatt./Suitable: ***DUCELLIER***

[111] **Paired article numbers**
- N° articolo appaiato
- Numéro d'article en paire
- paarige Artikelnummer
- Referencia artículo par

2.7686PHT

RENAULT		
CLIO I 1.8	0HR10DE	08/90 ⇨ 09/98
LAGUNA I 1.8	F3P678, F3P720, F3P724	11/93 ⇨ 03/01
LAGUNA I 2.0	6Z7U730, F3R722	11/93 ⇨ 03/01

FACET 2.7686PHT

05

DISTRIBUTOR CAPS

Adatt./Suitable: ***DUCELLIER***

DUCELLIER
2 525 623 D *M

RENAULT
77 00 859 053 *M

*M **Kit Distributor cap / Rotor**
- Kit Calotta / Distributore
- Kit Tête d'allumeur / Disrupteur
- Bausatz VerteilerKappe / -läufer
- Juego Tapa del distribuidor / Rotor

RENAULT		
CLIO I 1.8	0HR10DE	08/90 ⇨ 09/98
LAGUNA I 1.8	F3P678, F3P720, F3P724	11/93 ⇨ 03/01
LAGUNA I 2.0	6Z7U730, F3R722	11/93 ⇨ 03/01

FACET 2.7687

04

DISTRIBUTOR CAPS

Adatt./Suitable: ***DUCELLIER***

CITROËN
5940 57

FIAT
9567469880

[212] **Resistance Rotor [0hm] 1000**
- Rotore resistenza [0hm] 1000
- Résitance roteur [ohm] 1000
- Widerstand-Rotor [Ohm] 1000
- Resistencia rotor [ohm] 1000

CITROËN		
AX 1.3 Sport	M4A	04/87 ⇨ 12/88
AX 10	C1A	09/86 ⇨ 06/92
AX 10 E	C3A	12/86 ⇨ 12/88
AX 11	H1A, H1B, HDZ(TU1M)	09/86 ⇨ 12/97
AX 11 4x4	H1A	06/91 ⇨ 07/92
AX 11 Cat	HAZ(TU1CP)	09/88 ⇨ 12/89
AX 14	K1A(TU3), K1B, K1F, K1G, K1J, K2A, K2B, K2D, KAY(TU3CP), KDX(TU3M/Z), KDY(TU3FM), KDY(TU3M), KDZ(TU3M/Z)	09/86 ⇨ 04/97
AX 14 4x4	KD4, KDX(TU3M/Z), KDY(TU3FM), KDY(TU3M), KDZ(TU3M/Z)	06/91 ⇨ 12/96
AX 14 GT	KDZ(TU3M/Z)	01/89 ⇨ 12/91
BX 1.1	109LA, H1A	04/86 ⇨ 06/91
BX 1.4	150C, K1F, K2D	07/86 ⇨ 12/94
BX 1.4 E	150B(XY8), 150J, 150Y, K1F, KAZ	09/82 ⇨ 12/94
BX 1.6	B2C	02/88 ⇨ 12/94
BX 1.9	159B, 159C, D6U, DKK	05/85 ⇨ 12/94
BX 1.9 GTi	D6D, D6K	01/87 ⇨ 01/92
BX 14	150C, KDY(TU3M), KDZ(TU3M/Z)	01/86 ⇨ 02/93
BX 14 E	150A, 150C, K1G	10/82 ⇨ 02/93
BX 15	B1E(XU51C)	01/87 ⇨ 05/92
BX 16	171A, 171B, 171C, 171D, 23DH, B1E(XU51C), BAY(XU5CP), BAZ(XU5CP), BDY(XU5M), BDZ(XU5M)	10/82 ⇨ 12/94
BX 16 E	BDY(XU5M), BDZ(XU5M)	05/89 ⇨ 02/93
BX 19	159A, D2A(XU92C), D2C(XU92C), D2E, D6A(XU9J2), DDZ(XU9M), DKZ(XU9JA)	09/84 ⇨ 12/94
BX 19 4x4	DDZ(XU9M)	10/90 ⇨ 05/91
BX 19 Cat	DFZ(XU9J1)	07/86 ⇨ 12/94
BX 19 E	DDZ(XU9M)	06/88 ⇨ 02/93
BX 19 E 4x4	D2F	04/89 ⇨ 02/93
BX 19 GTi	D6A(XU9J2), DKZ(XU9JA)	07/86 ⇨ 02/93
BX 19 GTi 4x4	DKZ(XU9JA)	06/88 ⇨ 02/93
C15 1.0	108C(XV8), C1A, C1A(TU9/K), C1B(TU9/W), TU9	10/84 ⇨ 12/97
C15 1.1	H1A, HDZ(TU1M), TU1	08/88 ⇨ 07/96
C15 1.1 i	HDZ(TU1M), TU1MZ	07/88 ⇨ 12/96
C15 1.4	K1A, K1G, K1H(TU3A), KDY(TU3M)	07/87 ⇨ 12/96
C15 1.4 E	K1F, K1J, K2D, K3A, KAZ	07/86 ⇨ 12/96
C15 1.4 i	KDY(TU3FM), KDY(TU3M)	05/91 ⇨ 12/96
JUMPER I 2.0	XU102C	02/94 ⇨ 02/02
XM I 2.0	--	05/89 ⇨ 04/94
XM I 2.0 i	RDZ(XU10MZ), RFZ(XU10J2)	05/89 ⇨ 06/94
BERLINGO I 1.4	TU32	07/96 ⇨ 10/98
ZX 1.1	H1A, H1B, HDZ(TU1M), TU1	03/91 ⇨ 06/97
ZX 1.4 i	KDY(TU3M)	10/93 ⇨ 10/97
ZX 1.9	D6E(XU9JA)	03/91 ⇨ 06/97
ZX 1.9 i	DKZ(XU9JA), XU9JA	03/91 ⇨ 06/97
FIAT		
DUCATO II 2.0	--, R5B	03/94 ⇨ 12/95

FACET 2.7688

04

DISTRIBUTOR CAPS

Adatt./Suitable: ***DUCELLIER***

RENAULT
77 01 202 755 *M

*M **Kit Distributor cap / Rotor**
- Kit Calotta / Distributore
- Kit Tête d'allumeur / Disrupteur
- Bausatz VerteilerKappe / -läufer
- Juego Tapa del distribuidor / Rotor

[03] **Supplied until depletion**
- Fornibile fino ad esaurimento delle scorte
- Fourni jusqu'à épuisement du stock
- Lieferbar solange vorrat reicht
- Suministrado hasta el stock termina

[216] **contains article number**
- contiene il numero articolo
- contient le numéro d'article
- beinhaltet Artikelnummer
- número de artículo incluido

2.7667PHT **3.7696RS**

RENAULT		
ESPACE I 2.0 i	J7R760	01/89 ⇨ 12/90
ESPACE I 2.0 i Quadra	J7R760	03/88 ⇨ 12/92
ESPACE I 2.2	2QG15DE	07/86 ⇨ 12/90
ESPACE I 2.2 Quadra	2QG15DE	01/88 ⇨ 12/90

FACET 2.7691 — 04

DISTRIBUTOR CAPS

Adatt./Suitable: ***DUCELLIER***

RENAUD
77 00 729 838 *B

*B **Available distributor cap and rotor, only-not the distributor assy**
- Forniti solo calotta e distributore rotante, no lo spinterogeno completo
- Disponibles seulement la tete et le rotor, non pas l'allumeur complet
- Erhältlich nur kappe und rotor, nicht der komplette verteiler
- Disponibles solo la tapa y el rotor, no el distribuidor completo

03 **Supplied until depletion**
- Fornibile fino ad esaurimento delle scorte
- Fourni jusqu'à épuisement du stock
- Lieferbar solange vorrat reicht
- Suministrado hasta el stock termina

216 **contains article number**
- contiene il numero articolo
- contient le numéro d'article
- beinhaltet Artikelnummer
- número de artículo incluido

2.7659PHT 3.7688

RENAULT		
21 1.4	C2L714	06/88 ⇨ 12/95
25 2.0	08A, J6R763, J7R722, J7R723	04/84 ⇨ 12/93
25 2.0 12V	74AR-FXE, 7CYQD80D-E3, J7R721	06/88 ⇨ 12/93
25 2.2	04TNV88-C, 74G69-S4M, J7T708, J7T715, J7T730, J7T731, J7T732	04/84 ⇨ 12/92
RAPID 1.2	C1G726, C3G710, C3G712	09/91 ⇨ 03/98
RAPID 1.4	C1J768, C1J780, C2J784	07/85 ⇨ 08/91
RAPID 1.4 Cat	C3J700, C3J702, C3J760, C3J762	08/88 ⇨ 03/98
SUPER 5 1.2	C1G720, C1G722	01/87 ⇨ 08/90
SUPER 5 1.4	C1J768, C1J780, C1J788, C2J700, C2J780, C2J781, C2J782, C2J784, C2J788, C2J789, C3J700	10/84 ⇨ 08/90
SUPER 5 1.4 Cat	C3J700, C3J702, C3J760	10/85 ⇨ 12/96
SUPER 5 1.4 Turbo	C1J782, C1J788	04/85 ⇨ 08/90

FACET 2.7714 — 07

DISTRIBUTOR CAPS

Adatt./Suitable: ***FEMSA***

GENERAL MOTORS
93 150 093

SEAT
000 389 978 9
186035.06
SE 141914.001C

00 **Eliminated on 29-07-2020. Please verify the availability through our local distributors**
- Eliminato il 29-07-2020. Verificare la disponibilità presso i nostri distributori
- Eliminé le 29-07-2020. Verifier la disponibilité auprès de nos distributeurs sur place
- Am 29-07-2020 gestrichen. Evtl. Verfügbarkeit bitte bei unseren Händlern prüfen
- Eliminado en fecha 29-07-2020. Verificar la disponibilidad a través de nuestros distribuidores locales

SEAT		
IBIZA I 0.9	146A000	08/86 ⇨ 05/93
MARBELLA 0.9	09NCA	01/87 ⇨ 12/93
PANDA 0.9	100GL3000	10/80 ⇨ 12/86
PANDA 45	--	01/82 ⇨ 12/85
TERRA 0.9	09NCA	02/87 ⇨ 12/96

FACET 2.7716 — 07

DISTRIBUTOR CAPS

Adatt./Suitable: ***FEMSA***

FIAT
9936814

SEAT
000 993 681 4
186036.06
NG1 860 360 6
SE 127914.001A

03 **Supplied until depletion**
- Fornibile fino ad esaurimento delle scorte
- Fourni jusqu'à épuisement du stock
- Lieferbar solange vorrat reicht
- Suministrado hasta el stock termina

FIAT		
127 0.9	100GL.048	06/71 ⇨ 05/83
SEAT		
FURA 0.9	100GL3000	01/82 ⇨ 06/86
MARBELLA 0.8	5K9K718	08/86 ⇨ 12/93
PANDA 34 850	--	01/80 ⇨ 12/83
PANDA 35 850	--	01/80 ⇨ 12/83

FACET 2.7723PHT — 04

DISTRIBUTOR CAPS

Adatt./Suitable: ***FEMSA***

RENAUD
77 02 124 325

RENAULT		
4 0.8	80001	09/71 ⇨ 12/88
4 1.1	688712	02/78 ⇨ 06/90
5 1.4	847725	01/82 ⇨ 12/85
11 1.4	C2J720, C2J766, C2J767, C2J768	03/83 ⇨ 12/88
11 1.7	F2N700	10/83 ⇨ 12/87
18 1.4	847720, 847722	04/78 ⇨ 07/86
19 I 1.2	C1G730	01/88 ⇨ 12/92
19 I 1.4	C2J772, C2J776, C3J710	07/88 ⇨ 05/93
19 I 1.4 Cat	C3J710	01/89 ⇨ 04/92
19 II 1.4	C3J710	04/92 ⇨ 12/95
EXPRESS 1.1	C1E	01/85 ⇨ 10/90
EXPRESS 955	C1C	01/85 ⇨ 10/90
RAPID 1.1	C1E750, C1E760	07/85 ⇨ 04/95
SUPER 5 1.0	C1C700	10/84 ⇨ 10/88

FACET 2.7729 — 07

DISTRIBUTOR CAPS

Adatt./Suitable: ***FEMSA***

SEAT
SE 028914.001B

03 **Supplied until depletion**
- Fornibile fino ad esaurimento delle scorte
- Fourni jusqu'à épuisement du stock
- Lieferbar solange vorrat reicht
- Suministrado hasta el stock termina

SEAT		
MARBELLA 0.8	5K9K718	08/86 ⇨ 12/93

FACET 2.7783 — 07

DISTRIBUTOR CAPS

Adatt./Suitable: ***FORD***

FORD
0 267 2617
0 623 389
1 462 196
5 014 402
C6AH-12106-A
C7KH-12106-A

GENERAL MOTORS
7 992 207

Motorcraft
EDH 12
EDH 12 D
EDH 12 S
EDH 16

[03] **Supplied until depletion**
- Fornibile fino ad esaurimento delle scorte
- Fourni jusqu'à épuisement du stock
- Lieferbar solange vorrat reicht
- Suministrado hasta el stock termina

FORD		
CORTINA 1300	KL13H	10/70 ⇨ 03/72
FIESTA I 0.9	TKA, TKW, TLA	05/76 ⇨ 08/83
FIESTA I 1.3	J3E	08/77 ⇨ 08/83
TAUNUS 1.6	LCJ	07/79 ⇨ 07/82
TRANSIT I 1.6	4RB	11/77 ⇨ 10/86
TRANSIT I 2.0	4RC	11/77 ⇨ 07/82

FACET 2.7792PHT — 07

DISTRIBUTOR CAPS

Adatt./Suitable: ***FORD***

FORD
1 628 315
1 641 810
1 665 193
E3EE-12106-BA
E3EE-12106-BB
E5FZ-12106-B
E5FZ-12106-C
E9FZ-12106-A

Motorcraft
DH 390
DH 390B
DH 390E
DHE 411
EDH 390

[03] **Supplied until depletion**
- Fornibile fino ad esaurimento delle scorte
- Fourni jusqu'à épuisement du stock
- Lieferbar solange vorrat reicht
- Suministrado hasta el stock termina

FORD		
SIERRA I 2.0	NR2	03/85 ⇨ 12/86
SIERRA I 2.0 i	NR2	03/85 ⇨ 12/86
SCORPIO I 2.0 i	NRA, NRI	04/85 ⇨ 02/92

FACET 2.7793PHT — 07

DISTRIBUTOR CAPS

Adatt./Suitable: ***FORD***

FORD
1 643 632
E6AE-12106-CA
E6AZ-12106-A

JEEP
33004024
56026876

MAZDA
ZZM0-24-310
ZZM1-24-310
ZZM2-24-310

Motorcraft
DH 433
DH 434

RENAULT
89 33 004 024
89 56 026 876

[03] **Supplied until depletion**
- Fornibile fino ad esaurimento delle scorte
- Fourni jusqu'à épuisement du stock
- Lieferbar solange vorrat reicht
- Suministrado hasta el stock termina

JEEP		
CHEROKEE II 4.0 i	--, 1Z7K, ERH, MX	10/86 ⇨ 09/01
CHEROKEE II 4.0 i 4x4	ERH	01/95 ⇨ 09/01
COMANCHE 4.0 i	1Z7K	10/87 ⇨ 09/90
GRAND CHEROKEE 4.0 Laredo	ERH	10/96 ⇨ 09/98
GRAND WAGONEER 4.0 i	1Z7K	10/86 ⇨ 09/90
WAGONEER 4.0 i	1Z7K	10/86 ⇨ 09/90
WRANGLER 4.0	1Z7K, ERH	10/86 ⇨ 09/96

FACET 2.7903 — 04

DISTRIBUTOR CAPS

Adatt./Suitable: ***HITACHI***

BOSCH
F 005 X04 549

DAIHATSU
19101-87301

GENERAL MOTORS
7 992 396
94 021 067

HITACHI
44612700
82311214

HOLDEN
GH506

ISUZU
94021G67

MAZDA
3710-24-310

NISSAN
15501-208
22162-21007
22162-71300
22162-71312
22162-N8801
22162-N8801MP

[03] **Supplied until depletion**
- Fornibile fino ad esaurimento delle scorte
- Fourni jusqu'à épuisement du stock
- Lieferbar solange vorrat reicht
- Suministrado hasta el stock termina

HOLDEN		
ASTRA_LB 1.5	E15	08/84 ⇨ 01/86
NISSAN		
VANETTE II 1.5	A15	04/87 ⇨ 11/94

FACET 2.7911 — 04

DISTRIBUTOR CAPS

Adatt./Suitable: ***HITACHI***

HONDA
30102-PA1-732
30102-PA6-924
30102-PC1-004

LEYLAND
GDC147
GDC307

[00] **Eliminated on 15-01-2020. Please verify the availability through our local distributors**
- Eliminato il 15-01-2020. Verificare la disponibilità presso i nostri distributori
- Eliminé le 15-01-2020. Verifier la disponibilité auprès de nos distributeurs sur place
- Am 15-01-2020 gestrichen. Evtl. Verfügbarkeit bitte bei unseren Händlern prüfen
- Eliminado en fecha 15-01-2020. Verificar la disponibilidad a través de nuestros distribuidores locales

HONDA		
CIVIC II 1.3 [USA]	--	01/81 ⇨ 12/83

FACET 2.7922 — 05

DISTRIBUTOR CAPS

Adatt./Suitable: ***HITACHI***

HONDA
30102-PD2-006
30102-PD2-016

[03] **Supplied until depletion**
- Fornibile fino ad esaurimento delle scorte
- Fourni jusqu'à épuisement du stock
- Lieferbar solange vorrat reicht
- Suministrado hasta el stock termina

HONDA		
ACCORD III 1.6 L	A16A1	11/85 ⇨ 12/89
ACCORD III 2.0	A20A2	01/86 ⇨ 12/86
ACCORD III 2.0 16V EXS	B20A2	01/88 ⇨ 12/89
ACCORD III 2.0 EX	A20A2	11/85 ⇨ 05/89
ACCORD III 2.0 i 16V	B20A2, B20A8	01/87 ⇨ 12/89
ACCORD VI 1.6	A16A5	10/98 ⇨ 12/02
CIVIC III 1.5 i Si [USA]	--	01/84 ⇨ 12/87
ROVER		
200 I 213 S	EV2	09/85 ⇨ 09/89

FACET 2.7940 — 07,5

DISTRIBUTOR CAPS

Adatt./Suitable: ***HITACHI***

BOSCH
F 005 X04 563
F 005 X04 581

NISSAN
22162-06W00
22162-06W03
22162-06W03MP
22162-06W04
22162-06W04MP
22162-06W05
22162-06W06
22162-18F01
22162-W4502
B2162-06W05

[03] **Supplied until depletion**
- Fornibile fino ad esaurimento delle scorte
- Fourni jusqu'à épuisement du stock
- Lieferbar solange vorrat reicht
- Suministrado hasta el stock termina

NISSAN		
200 SX 1.8i Turbo	CA18ET	01/87 ⇨
PICK UP I 2.4 [USA]	Z24i	01/85 ⇨ 12/89
TERRANO I 2.4 i 4WD	Z24i	10/87 ⇨ 02/93
URVAN III 2.4 i	Z24i	05/89 ⇨ 09/93
VAN 2.4 [USA]	Z24i	01/86 ⇨ 12/89
VANETTE II 2.0	Z20S	07/87 ⇨ 08/94

FACET 2.7941 — 04

DISTRIBUTOR CAPS

Adatt./Suitable: ***HITACHI***

BOSCH
1 987 233 108

NISSAN
22162-KA020

SUBARU
22162-KA020
22162-KA050

[03] **Supplied until depletion**
- Fornibile fino ad esaurimento delle scorte
- Fourni jusqu'à épuisement du stock
- Lieferbar solange vorrat reicht
- Suministrado hasta el stock termina

SUBARU		
J-SERIES 1.0i EFC-SYS	--	01/89 ⇨
J-SERIES 1.2	--	01/87 ⇨ 12/91
J-SERIES 1.2 SDX	--	01/89 ⇨ 12/91
J-SERIES 1.2i EFC-SYS	--	01/89 ⇨
JUSTY 1.2 [USA]	--	01/87 ⇨ 12/92
TRENDY 1.0	EF10	08/86 ⇨ 05/95
TRENDY 1.2 12v	EF12	06/86 ⇨ 08/95

FACET 2.7946 — 05

DISTRIBUTOR CAPS

Adatt./Suitable: ***HITACHI***

FORD
1 953 281

NISSAN
22162-01B01
22162-12E01
22162-17M00
22162-17M01
22162-17M02
22162-17M03
22162-17M04
22162-17M05
22162-21F03
22162-40F00
22162-78A00

SUBARU
22162-AA040

SUZUKI
33321-64B10
33321-64B10-000

[03] **Supplied until depletion**
- Fornibile fino ad esaurimento delle scorte
- Fourni jusqu'à épuisement du stock
- Lieferbar solange vorrat reicht
- Suministrado hasta el stock termina

FORD		
MAVERICK 2.4 i	KA24E	02/93 ⇨ 08/96
NISSAN		
100NX 1.6	GA16DS	03/90 ⇨ 10/94
BLUEBIRD 1.8 Turbo	CA18T	04/84 ⇨ 11/92
BLUEBIRD 2.0 i	CA20E	04/84 ⇨ 12/90
NX1600 1.6i [USA]	GA16, GA16DE	01/88 ⇨ 12/92
PICK UP I 2.4 i [USA]	KA24E	01/89 ⇨
PICK UP I 2.4 i 12V	KA24E	04/92 ⇨ 02/98
PICK UP I 2.4 i 12V 4WD	KA24E	04/92 ⇨ 02/98
PRIMERA I 1.6 i	GA16DS	07/90 ⇨ 03/98
PULSAR NX 1.6 [USA]	GA16	01/88 ⇨
SENTRA III 1.6i [USA]	GA16DE	01/90 ⇨ 12/92
SILVIA 1.8	--	01/84 ⇨
SUNNY II 1.0 L	E10S	07/86 ⇨ 09/90
SUNNY II 1.6 i 12V	GA16i	06/86 ⇨ 06/91
SUNNY III 1.6 16V 4x4	GA16DS	11/90 ⇨ 05/95
SUNNY III 1.6 i	GA16DE, GA16DS	10/90 ⇨ 03/00
SUNNY III 1.6 i 16V 4WD	GA16DE, GA16DS	10/90 ⇨ 06/95
SUNNY III 1.6 i 16V 4x4	GA16DE	10/92 ⇨ 03/00
TERRANO II 2.4 4WD	KA24E	05/96 ⇨ 09/07
TERRANO II 2.4 i 12V 4WD	KA24E	02/93 ⇨ 12/97
SUBARU		
LOYALE 1.8i SPi [USA]	--	01/90 ⇨
LOYALE 1.8i Turbo [USA]	--	01/90 ⇨
L-SERIES 1.8i	--	01/86 ⇨ 12/91
L-SERIES 1.8i TB	--	01/86 ⇨ 12/91
L-SERIES 1.8i TB 4x4	--	01/86 ⇨ 12/91
L-SERIES 1.8i Turbo	--	01/86 ⇨ 12/91
XT 1.8 [USA]	--	01/87 ⇨ 12/92
SUZUKI		
SWIFT I / II / III 1.3 GTi	G13B	03/89 ⇨ 05/01
SWIFT I / II / III 1.3 GTi DOHC	G13B	10/89 ⇨ 12/95
SWIFT I / II 1.3 GTi/GXi	G13B	08/85 ⇨ 03/89

FACET 2.7948 — 04

DISTRIBUTOR CAPS

Adatt./Suitable: ***HITACHI***

HITACHI
43J83-17001

SUBARU
49100-5501

[03] **Supplied until depletion**
- Fornibile fino ad esaurimento delle scorte
- Fourni jusqu'à épuisement du stock
- Lieferbar solange vorrat reicht
- Suministrado hasta el stock termina

SUBARU		
J-SERIES 1.0	--	01/87 ⇨ 12/91
TRENDY 1.0	EF10	08/86 ⇨ 05/95

FACET 2.7957 — 07

DISTRIBUTOR CAPS

Adatt./Suitable: ***HITACHI***

BOSCH
F 005 X04 565

HOLDEN
2216215M04
GH617

NISSAN
22162-15M00
22162-15M01
22162-15M01MP
22162-15M02
22162-15M02MP
22162-15M03
22162-15M03MP
22162-15M04
22162-52A01

SUBARU
49100-8711

[03] **Supplied until depletion**
- Fornibile fino ad esaurimento delle scorte
- Fourni jusqu'à épuisement du stock
- Lieferbar solange vorrat reicht
- Suministrado hasta el stock termina

HOLDEN		
ASTRA_LB 1.5	E15	08/84 ⇨ 01/86
ASTRA_LC 1.6	E16S	02/86 ⇨ 06/87
NISSAN		
LAUREL 2.0 GL	CA20S	11/84 ⇨ 12/85
PULSAR 1.6	E16	01/84 ⇨ 12/86
PULSAR 1.6 [USA]	E16	01/82 ⇨ 12/83
SUNNY II 1.0 L	E10S	07/86 ⇨ 09/90
SUNNY II 1.3	E13S	06/86 ⇨ 10/91
SUNNY II 1.5	E15S	06/86 ⇨ 10/88
SUNNY II 1.6	E16S	06/86 ⇨ 10/88
SUBARU		
L-SERIES 1.3	--	01/79 ⇨ 12/91
L-SERIES 1.6	--	01/86 ⇨ 12/87

FACET 2.7958 — 05

DISTRIBUTOR CAPS

Adatt./Suitable: ***HITACHI***

SUBARU
22162-AA030

[00] **Eliminated on 22-02-2022. Please verify the availability through our local distributors**
- Eliminato il 22-02-2022. Verificare la disponibilità presso i nostri distributori
- Eliminé le 22-02-2022. Verifier la disponibilité auprès de nos distributeurs sur place
- Am 22-02-2022 gestrichen. Evtl. Verfügbarkeit bitte bei unseren Händlern prüfen
- Eliminado en fecha 22-02-2022. Verificar la disponibilidad a través de nuestros distribuidores locales

SUBARU		
L-SERIES 1.6	--	01/87 ⇨ 12/91

FACET 2.7960 — 05

DISTRIBUTOR CAPS

Adatt./Suitable: ***HITACHI***

BOSCH
F 005 X12 695

GENERAL MOTORS
94 322 990

HOLDEN
8943229900

HONDA
8-94322-990-0

ISUZU
8-94322990-0

OPEL
43 00 982

[03] **Supplied until depletion**
- Fornibile fino ad esaurimento delle scorte
- Fourni jusqu'à épuisement du stock
- Lieferbar solange vorrat reicht
- Suministrado hasta el stock termina

HOLDEN		
RODEO_TF 2.6i	4ZE1	08/88 ⇨ 03/96
RODEO_TF 2.6i 4x4	4ZE1	08/88 ⇨ 03/96
HONDA		
PASSPORT 2.6 i [USA]	4ZE1	01/94 ⇨
ISUZU		
AMIGO 2.3i [USA]	LW3	01/88 ⇨
AMIGO 2.6i [USA]	RLJ	01/88 ⇨
PICK-UP 2.3i [USA]	LW3	01/88 ⇨
PICK-UP 2.6i [USA]	RLJ	01/88 ⇨
RODEO 2.6i [USA]	RLJ	01/90 ⇨
OPEL		
CAMPO 2.3	23P	08/94 ⇨ 09/96

FACET 2.7963 — 05

DISTRIBUTOR CAPS

Adatt./Suitable: ***HITACHI***

NISSAN
22162-11E07

[00] **Eliminated on 14-04-2020. Please verify the availability through our local distributors**
- Eliminato il 14-04-2020. Verificare la disponibilità presso i nostri distributori
- Eliminé le 14-04-2020. Verifier la disponibilité auprès de nos distributeurs sur place
- Am 14-04-2020 gestrichen. Evtl. Verfügbarkeit bitte bei unseren Händlern prüfen
- Eliminado en fecha 14-04-2020. Verificar la disponibilidad a través de nuestros distribuidores locales

NISSAN		
BLUEBIRD 1.6	CA16S	12/85 ⇨ 06/90
BLUEBIRD 1.6 DX	CA16S	11/83 ⇨ 02/88
BLUEBIRD 2.0	CA20S	12/85 ⇨ 09/90

FACET 2.7968 — 07

DISTRIBUTOR CAPS

Adatt./Suitable: ***HITACHI***

ACURA
30102-P54-006
30102-PT2-006

BOSCH
1 987 233 127
F 005 X12 891

HONDA
30102-P54-006
30102-PCB-004
30102-PEL-J01
30102-PT2-006
30102-PT2-016
30102-PT2-026

ROVER
GDC405
GDC406
NJD100150

ACURA		
INTEGRA II 1.8	F18A2	10/90 ⇨ 09/93
INTEGRA III 1.8 LS	F18C1	10/93 ⇨ 09/01
INTEGRA III 1.8 Sport	F18C1	10/93 ⇨ 09/01
HONDA		
ACCORD IV 2.0 16V	F20A5	01/90 ⇨ 12/93
ACCORD IV 2.0 i 16V	F20A4, F20A7, F20A8, F20Z3	01/90 ⇨ 12/93
ACCORD IV 2.2	F22A6	05/92 ⇨ 12/93
ACCORD IV 2.2 i 16V	F22A3, F22A7, F22A8	01/90 ⇨ 12/93
ACCORD IV 2.2 i 16V Automatik	F22A3	01/90 ⇨ 03/93
ACCORD V 1.8 16V	F18A3	01/94 ⇨ 12/95
ACCORD V 2.0	F20B3	09/93 ⇨ 12/97
ACCORD V 2.0 i	F20Z2	03/93 ⇨ 01/96
ACCORD V 2.0 i LS 16V	F20B3	09/93 ⇨ 02/98
ACCORD V 2.0 i S	F20Z1	03/93 ⇨ 01/96
ACCORD V 2.2 i 16V	F22B4	08/95 ⇨ 12/97
HONDA		
ACCORD V 2.2 i ES	F22B5	09/93 ⇨ 02/98
ACCORD V 2.3 i SR	H23A3	03/93 ⇨ 01/96
ACCORD VI 2.2 Type-R	H22A7	02/99 ⇨ 12/02
CIVIC V 1.5	D15B7	08/93 ⇨ 12/95
CIVIC V 1.5 i 16V	D15B2, D15Z1	10/91 ⇨ 11/95
CIVIC V 1.5 i LSi	D15B7	08/93 ⇨ 11/95
CIVIC V 1.6 16V Vtec	D16Z6, D16Z7	10/91 ⇨ 11/95
CIVIC V 1.6 4x4	D16Z7	01/92 ⇨ 10/95
CIVIC V 1.6 EX	D16A7	08/93 ⇨ 10/95
CIVIC V 1.6 i	D16Y7	01/94 ⇨ 11/95
CIVIC V 1.6 i Vtec	B16A2, D16Z9	01/94 ⇨ 03/96
CIVIC V 1.6 VTi	B16A2	10/91 ⇨ 11/95
CIVIC V 1.6 VTi 16V	B16A2	10/91 ⇨ 11/95
BALLADE 1.6i	B16A6	01/97 ⇨ 02/01
BALLADE 1.8 i	B18B4	01/96 ⇨ 02/01
CIVIC IV 1.6i	--	01/90 ⇨ 12/91
CIVIC VI 1.4 i	D14A2, D14A5, D14Z2	06/95 ⇨ 02/01
CIVIC VI 1.4 i S	D14Z2	11/95 ⇨ 02/01
CIVIC VI 1.4i 16V	D14Z1	11/98 ⇨ 03/01
CIVIC VI 1.5 i	D15Z6	11/95 ⇨ 02/01
CIVIC VI 1.5 i Vtec-E	D15Z3	09/94 ⇨ 01/97
CIVIC VI 1.6	--	05/96 ⇨ 04/99
CIVIC VI 1.6 i	D16Y3	09/94 ⇨ 03/00
CIVIC VI 1.6 i Vtec	B16A2, D16Y2, D16Y8	09/94 ⇨ 02/01
CIVIC VI 1.6 VTi	B16A2	11/95 ⇨ 02/01
CIVIC VI 1.6i 16V	D16Y7	01/96 ⇨
CIVIC VI 1.6i 16V Vtec	D16Y8	01/96 ⇨ 09/99
CR-V I 2.0	B20Z1	04/99 ⇨ 02/02
CR-V I 2.0 16V 4WD	B20B, B20Z1	10/95 ⇨ 02/02
CR-V I 2.0 i 16V	B20B3, B20B4, B20B9, B20Z3	02/97 ⇨ 04/99
CRX III 1.6 ESi	D16Y8, D16Z6	03/92 ⇨ 12/98
CRX III 1.6 i VTi	B16A2	03/92 ⇨ 12/98
HR-V 1.6 16V	350Y	03/99 ⇨
HR-V 1.6 16V 4WD	350Y, D16W5	03/99 ⇨
HR-V 1.6i 16V	D16W2	04/99 ⇨
INTEGRA 1.8 i	B18B1	01/98 ⇨
LOGO 1.3	D13B7	03/99 ⇨ 03/02
PRELUDE IV 2.0 i 16V	F20A4	02/92 ⇨ 09/96
PRELUDE IV 2.2 i 16V Vtec	H22A2	02/93 ⇨ 09/96
PRELUDE IV 2.3 i 16V	H23A2	02/92 ⇨ 09/96
PRELUDE V 2.0 16V	F20A4	10/96 ⇨ 10/00
PRELUDE V 2.2 16V	H22A5	10/96 ⇨ 10/00
PRELUDE V 2.2 i 16V	F22A2	10/96 ⇨ 10/01
PRELUDE V 2.2 i 16V VTi-R	H22A8	10/98 ⇨ 12/01
PRELUDE V 2.2 Si	F22Z6	03/97 ⇨ 07/02
SHUTTLE 2.2 16V	F22B8	10/94 ⇨ 02/98
ROVER		
400 II 416 Si	D16Y2	03/95 ⇨ 03/00
600 618 i/Si	F18A3	03/96 ⇨ 02/99
600 620 i	F20Z2	08/93 ⇨ 06/96
600 620 Si	F20Z1	08/93 ⇨ 02/99
600 623 Si	H23A3	08/93 ⇨ 06/99

FACET 2.7969

07,5

DISTRIBUTOR CAPS

Adatt./Suitable: ***HITACHI***

ACURA
30102-PM5-A02
BOSCH
1 987 233 125
HONDA
30102-PM5-A02
30102-PM5-A03
30102-PM5-A04
30102-PM5-A05
30102-PM7-006
30102-PM7-016
30102-PM7-036
30102-PR3-003
30102-PR3-006
30102-PR3-026
30102-PR4-A02
ROVER
GDC346
GDC347
NJD10006
NJD10008
NJD10009

[03] **Supplied until depletion**
- Fornibile fino ad esaurimento delle scorte
- Fourni jusqu'à épuisement du stock
- Lieferbar solange vorrat reicht
- Suministrado hasta el stock termina

[211] **Resistance [kOhm] 5**
- Resistenza [kOhm] 5
- Résistance [kOhm] 5
- Widerstand [kOhm] 5
- Resistencia [kOhm] 5

ACURA		
INTEGRA I 1.6	D16A1	01/85 ⇨ 12/90
INTEGRA I 1.6 i	D16A8	01/85 ⇨ 12/90
HONDA		
CIVIC IV 1.5 i 16V	D15B2	10/87 ⇨ 09/91
CIVIC IV 1.6i	--	01/90 ⇨ 12/91
CIVIC IV SHUTTLE 1.5 i 16V	D15B2	01/88 ⇨ 11/91
CIVIC IV SHUTTLE 1.6i	--	01/88 ⇨ 12/91
CIVIC IV SHUTTLE 1.6i 16V 4WD	D16Z2	01/88 ⇨ 12/92
CONCERTO 1.5 i	--	01/90 ⇨ 12/91
CONCERTO 1.6i DOHC	--	01/90 ⇨ 12/91
CONCERTO 1.6i SOHC	--	01/90 ⇨ 12/91
ROVER		
200 II 216 GSi	1GH5E-180, D16A7	10/89 ⇨ 12/95
200 II 216 GTi	D16A8, D16A9	01/90 ⇨ 10/95
400 I 416 GTI/GTE	D16A9	04/90 ⇨ 04/95

FACET 2.7971

07

DISTRIBUTOR CAPS

Adatt./Suitable: ***HITACHI***

BOSCH
1 987 233 126
HONDA
30102-PM3-015
30102-PM3-025
30102-PM3-035
30102-PM3-045

[03] **Supplied until depletion**
- Fornibile fino ad esaurimento delle scorte
- Fourni jusqu'à épuisement du stock
- Lieferbar solange vorrat reicht
- Suministrado hasta el stock termina

HONDA		
ACCORD IV 1.8	--	01/90 ⇨ 12/91
ACCORD IV 2.0 16V	F20A2, F20A3, F20A6	01/90 ⇨ 03/93
CIVIC V 1.3	D13B2	01/92 ⇨ 12/92
CIVIC V 1.3 16V	D13B2	10/91 ⇨ 11/95
CIVIC IV 1.2	D12B1	01/88 ⇨ 12/91
CIVIC IV 1.3	D13B1	10/87 ⇨ 12/89
CIVIC IV 1.3 [USA]	--	09/87 ⇨ 12/89
CIVIC IV 1.3 16V Cat	D13B2	09/89 ⇨ 09/91
HONDA		
CIVIC IV 1.4 L	D14A1	10/87 ⇨ 12/89
CIVIC IV 1.4i 16V	D14A1	01/90 ⇨ 12/91
CIVIC IV SHUTTLE 1.4 i 16V	D14A1	01/88 ⇨ 12/92
CONCERTO 1.4	D14A1	08/89 ⇨ 10/92
CONCERTO 1.6i	D16A	01/90 ⇨ 12/91

FACET 2.7973

05

DISTRIBUTOR CAPS

Adatt./Suitable: ***HITACHI***

INFINITI
22162-53J00
NISSAN
22162-53J00

[03] **Supplied until depletion**
- Fornibile fino ad esaurimento delle scorte
- Fourni jusqu'à épuisement du stock
- Lieferbar solange vorrat reicht
- Suministrado hasta el stock termina

INFINITI		
G20 2.0	SR20DE	01/90 ⇨ 12/97
NISSAN		
100NX 2.0	SR20DE	10/90 ⇨ 10/94
100NX 2.0 GTI	SR20DE	03/91 ⇨ 10/94
PRIMERA I 2.0 i	SR20DI	07/90 ⇨ 03/98
SENTRA III 2.0i [USA]	SR20DE	01/90 ⇨
SUNNY III 2.0 GTI 16V	SR20DE	10/90 ⇨ 05/95
SUNNY III 2.0 GTI-R 4x4	SR20DET	10/90 ⇨ 05/95

FACET 2.7975

05

DISTRIBUTOR CAPS

Adatt./Suitable: ***HITACHI***

SUBARU
22162-AA060

[03] **Supplied until depletion**
- Fornibile fino ad esaurimento delle scorte
- Fourni jusqu'à épuisement du stock
- Lieferbar solange vorrat reicht
- Suministrado hasta el stock termina

SUBARU		
LEGACY I 1.8i SPi	--	01/89 ⇨
LEGACY I 1800	EJ18SPI	01/89 ⇨ 07/94
LEGACY I 1800 4WD	EJ18SPI	01/89 ⇨ 07/94

FACET 2.7976

07

DISTRIBUTOR CAPS

Adatt./Suitable: ***HITACHI***

HONDA
30102-P12-A01
30102-PI2-A01
30102-PT3-A12

[03] **Supplied until depletion**
- Fornibile fino ad esaurimento delle scorte
- Fourni jusqu'à épuisement du stock
- Lieferbar solange vorrat reicht
- Suministrado hasta el stock termina

HONDA		
ACCORD V 2.0	F20B3	09/93 ⇨ 12/97
ACCORD V 2.0 i LS 16V	F20B3	09/93 ⇨ 02/98
ACCORD V 2.2 i [USA]	--	01/94 ⇨ 12/95
ACCORD V 2.2 i 16V	F22B4	08/95 ⇨ 12/97
ACCORD V 2.2 i ES	F22B5	09/93 ⇨ 02/98
PRELUDE V 2.2 i 16V VTi-R	H22A4, H22Z1	10/96 ⇨ 12/98

FACET 2.7977

05

DISTRIBUTOR CAPS

Adatt./Suitable: ***HITACHI***

MAZDA
FS05-18-V00

[03] **Supplied until depletion**
- Fornibile fino ad esaurimento delle scorte
- Fourni jusqu'à épuisement du stock
- Lieferbar solange vorrat reicht
- Suministrado hasta el stock termina

FORD AUSTRALIA		
TELSTAR 2.0 EFi	FS	10/94 ⇨ 11/96
MAZDA		
626 V 1.8	FP, FP01LP	08/91 ⇨ 04/97
626 V 1.8 i	--, FP	08/91 ⇨ 06/97
626 V 2.0 i	FS	08/91 ⇨ 04/97
626 V 2.0 i 4WD	FS	04/92 ⇨ 04/97
MX-6 2.0	FS	02/92 ⇨ 02/97

FACET 2.7979 — 07

DISTRIBUTOR CAPS

Adatt./Suitable: ***HITACHI***

NISSAN
22162-73C00

[03] **Supplied until depletion**
- Fornibile fino ad esaurimento delle scorte
- Fourni jusqu'à épuisement du stock
- Lieferbar solange vorrat reicht
- Suministrado hasta el stock termina

NISSAN		
PRIMERA I 1.6 i	GA16DE	02/91 ⇨ 03/98
SUNNY III 1.4 i	GA14DE	10/90 ⇨ 05/95
SUNNY III 1.4 i 16V	GA14DE	10/90 ⇨ 06/95
SUNNY III 1.6 i	GA16DE	10/90 ⇨ 05/95
SUNNY III 1.6 i 16V	GA16DE	10/92 ⇨ 05/95

FACET 2.7982 — 07,5

DISTRIBUTOR CAPS

Adatt./Suitable: ***HITACHI***

HONDA
30102-P0A-A01
30102-P0A-A02
30102-P2M-A01
30102-P45-G02

ROVER
GDC407
NJD100190

[03] **Supplied until depletion**
- Fornibile fino ad esaurimento delle scorte
- Fourni jusqu'à épuisement du stock
- Lieferbar solange vorrat reicht
- Suministrado hasta el stock termina

HONDA		
ACCORD V 1.9 i	F18A3	02/96 ⇨ 10/98
ACCORD V 2.0 i LS	F20Z1	02/96 ⇨ 10/98
ACCORD V 2.2	F22B1, F22Z2	10/93 ⇨ 12/97
ACCORD V 2.2 16V	F22Z1	01/96 ⇨ 09/98
ACCORD V 2.2 i [USA]	--	01/94 ⇨ 12/95
ACCORD V 2.2 i VTEC	F22Z2	02/96 ⇨ 10/98
CIVIC VI 1.4 i	D14A2, D14A5	06/95 ⇨ 02/01
CIVIC VI 1.4i 16V	D14Z3, D14Z4	11/98 ⇨ 12/00
CIVIC VI 1.4i 16V Vtec	D14Z4	01/99 ⇨
CIVIC VI 1.5 16V	D15Z8	01/97 ⇨ 02/01
CIVIC VI 1.6	D16W4	11/98 ⇨ 03/01
CIVIC VI 1.6 i	D16Y3	09/94 ⇨ 02/01
CIVIC VI 1.6 i Vtec	D16Y6	11/95 ⇨ 02/01
CIVIC VI 1.6i 16V	D16W3	11/98 ⇨ 12/00
CIVIC V 1.6 i Vtec	D16Y6	01/94 ⇨ 03/96
ODYSSEY 2.2	F22B6	01/95 ⇨ 12/97
ROVER		
400 II 416 Si	D16Y2	03/95 ⇨ 03/00
600 618 i/Si	F18A3	03/96 ⇨ 02/99
600 620 i	F20Z2	08/93 ⇨ 06/96
600 620 Si	F20Z1	08/93 ⇨ 02/99

FACET 2.7984 — 07,5

DISTRIBUTOR CAPS

Adatt./Suitable: ***HITACHI***

ACURA
30102-PV1-A05

HONDA
30102-PV1-A03
30102-PV1-A04
30102-PV1-A05

[00] **Eliminated on 22-02-2022. Please verify the availability through our local distributors**
- Eliminato il 22-02-2022. Verificare la disponibilità presso i nostri distributori
- Eliminé le 22-02-2022. Verifier la disponibilité auprès de nos distributeurs sur place
- Am 22-02-2022 gestrichen. Evtl. Verfügbarkeit bitte bei unseren Händlern prüfen
- Eliminado en fecha 22-02-2022. Verificar la disponibilidad a través de nuestros distribuidores locales

ACURA		
VIGOR 2.5	G25A	09/91 ⇨

FACET 2.7988 — 05

DISTRIBUTOR CAPS

Adatt./Suitable: ***HITACHI***

BOSCH
F 005 X04 754

MAZDA
B3C7-18-V00

[03] **Supplied until depletion**
- Fornibile fino ad esaurimento delle scorte
- Fourni jusqu'à épuisement du stock
- Lieferbar solange vorrat reicht
- Suministrado hasta el stock termina

[211] **Resistance [kOhm] 10**
- Resistenza [kOhm] 10
- Résistance [kOhm] 10
- Widerstand [kOhm] 10
- Resistencia [kOhm] 10

MAZDA		
121 II 1.3 16V	B3(16V)	11/90 ⇨ 03/96
121 II 1.3 i 16V	B3(16V)	11/90 ⇨ 03/96

FACET 2.7989 — 07

DISTRIBUTOR CAPS

Adatt./Suitable: ***HITACHI***

BOSCH
F 00E 140 211
F 00E 140 438

FORD
1 961 043

NISSAN
22162-03M00
22162-0M200
22162-0M300
22162-1S700
22162-3S500

FORD		
MAVERICK 2.4 i	KA24	09/96 ⇨ 04/98
NISSAN		
ALMERA I 1.4	GA14DE	09/95 ⇨ 07/00
ALMERA I 1.4 GX,LX	GA14DE	09/95 ⇨ 07/00
ALMERA I 1.4 S, GX, LX	GA14DE	09/95 ⇨ 03/00
ALMERA I 1.6	GA16DE	07/95 ⇨ 07/00
ALMERA I 1.6 SLX	GA16DE	09/95 ⇨ 07/00
ALMERA I 1.6 SR, SLX	GA16DE	09/95 ⇨ 03/00
PICK UP I 2.4 i 12V	KA24E	04/92 ⇨ 02/98
PICK UP I 2.4 i 12V 4WD	KA24E	04/92 ⇨ 02/98
PICK UP II 2.4 i	KA24E	02/98 ⇨ 04/05
PICK UP II 2.4 i 4WD	KA24E	02/98 ⇨ 04/05
PRIMERA I 1.6 i	GA16DE	02/91 ⇨ 03/98
SENTRA IV 1.6i	GA16DE	01/95 ⇨ 12/97
SUNNY III 1.6 i	GA16DE	06/91 ⇨ 03/00
TERRANO II 2.4 4WD	KA24E	05/96 ⇨ 09/07
TERRANO II 2.4 i 12V 4WD	KA24E	02/93 ⇨ 12/97

FACET 2.7992 — 07

DISTRIBUTOR CAPS

Adatt./Suitable: ***HITACHI***

BOSCH
F 005 X12 884

FORD AUSTRALIA
F S90-18-V00

MAZDA
FS90-18-V00

[00] **Eliminated on 09-08-2021. Please verify the availability through our local distributors**
- Eliminato il 09-08-2021. Verificare la disponibilità presso i nostri distributori
- Eliminé le 09-08-2021. Verifier la disponibilité auprès de nos distributeurs sur place
- Am 09-08-2021 gestrichen. Evtl. Verfügbarkeit bitte bei unseren Händlern prüfen
- Eliminado en fecha 09-08-2021. Verificar la disponibilidad a través de nuestros distribuidores locales

[03] **Supplied until depletion**
- Fornibile fino ad esaurimento delle scorte
- Fourni jusqu'à épuisement du stock
- Lieferbar solange vorrat reicht
- Suministrado hasta el stock termina

FORD AUSTRALIA		
TELSTAR 2.0 EFi	FS	10/94 ⇨ 11/96
MAZDA		
626 V 1.8	FP, FP01LP	08/91 ⇨ 04/97

MAZDA		
626 V 1.8 i	--, FP	08/91 ⇨ 06/97
626 V 2.0 i	FS	08/91 ⇨ 04/97
626 V 2.0 i 4WD	FS	04/92 ⇨ 04/97
MX-6 2.0	FS	02/92 ⇨ 02/97

FACET 2.7993

07

DISTRIBUTOR CAPS

Adatt./Suitable: ***HITACHI***

HONDA
30102-P2A-J01

[03] **Supplied until depletion**
- Fornibile fino ad esaurimento delle scorte
- Fourni jusqu'à épuisement du stock
- Lieferbar solange vorrat reicht
- Suministrado hasta el stock termina

HONDA		
BALLADE 1.5	D15Z4	01/97 ⇨
BALLADE 1.6i	D16Y9	01/96 ⇨ 02/01
CIVIC VI 1.4	D14A4	11/95 ⇨ 10/98
CIVIC VI 1.4 i	D14A3, D14A4, D14Z1	11/95 ⇨ 02/01
CIVIC VI 1.4 i S	D14A4	11/95 ⇨ 02/01

FACET 2.8070

04

DISTRIBUTOR CAPS

Adatt./Suitable: ***LUCAS***

FORD
1 00E -12116-A
1 00E -12116-B

[03] **Supplied until depletion**
- Fornibile fino ad esaurimento delle scorte
- Fourni jusqu'à épuisement du stock
- Lieferbar solange vorrat reicht
- Suministrado hasta el stock termina

FORD		
CORSAIR 1.5	EV15LN, EV15N	10/63 ⇨ 09/65
CORSAIR 1.5 GT	EV15LH	10/63 ⇨ 09/65
CORTINA 1200	--	10/62 ⇨ 09/66
CORTINA 1500	--	10/62 ⇨ 09/66
CORTINA 1500 GT	--	10/62 ⇨ 09/66
CORTINA GT	--	10/62 ⇨ 09/66
ZEPHYR 1.7	--, EL17L	03/62 ⇨ 03/68
LAND ROVER		
88/109 2.3 4x4	10H, 11H	09/61 ⇨ 12/86

FACET 2.8075

04

DISTRIBUTOR CAPS

Adatt./Suitable: ***LUCAS***

FORD
1 13E -12116-A

Motorcraft
EDH 10
EDH 10D

[03] **Supplied until depletion**
- Fornibile fino ad esaurimento delle scorte
- Fourni jusqu'à épuisement du stock
- Lieferbar solange vorrat reicht
- Suministrado hasta el stock termina

AUSTIN		
1000-SERIES 1100	--	01/70 ⇨ 12/74
1000-SERIES 1300	--	01/70 ⇨ 12/74
1000-SERIES 1300 GT	--	01/70 ⇨ 12/74
ALLEGRO 1.1	10H	05/73 ⇨ 10/81
ALLEGRO 1.3	12H	05/73 ⇨ 03/82
ALLEGRO 1.5 Super	14H	05/73 ⇨ 03/82
APACHE 1300	--	11/71 ⇨ 10/74
APACHE 1300 TC	--	11/71 ⇨ 10/74
MAXI 1500	--, 14H	04/69 ⇨ 07/80
MAXI 1750	17H	04/69 ⇨ 10/80
MAXI 1750 HL	--, 17LA	10/72 ⇨ 10/80
MINI 1.3	12HC	09/69 ⇨ 09/80
MINI 1000	--, 99H	10/67 ⇨ 09/84
MINI 1275 GT	12H	10/69 ⇨ 08/80
MINI I 850	781Y	06/59 ⇨ 08/69
MINI I Cooper S	--	09/62 ⇨ 12/71
BOND		
EQUIPE 1300 GT	--	01/67 ⇨ 12/70
FORD		
CORTINA 1200	--	10/62 ⇨ 09/66
CORTINA 1500	--	10/62 ⇨ 09/66
CORTINA 1500 GT	--	10/62 ⇨ 09/66
CORTINA GT	--	10/62 ⇨ 09/66
ESCORT I RS 1600	--, BDA	01/70 ⇨ 10/74
ESCORT II 1.6 RS	LC	12/74 ⇨ 08/80
ESCORT II 1.8	--	12/74 ⇨ 08/80
ESCORT II RS 1800	KL18S	03/75 ⇨ 08/77
JENSEN		
GT 2.0	--	06/75 ⇨ 12/76
HEALEY 2.0	--	01/72 ⇨ 12/75
LAND ROVER		
88/109 2.3 4x4	10H, 11H	09/61 ⇨ 12/86
LOTUS		
ECLAT 2.0	907	10/75 ⇨ 05/80
ELITE 2.0	907	05/74 ⇨ 05/80
ESPRIT 2.0	907	10/75 ⇨ 05/80
MG		
1300 MK.II 1300	--	09/67 ⇨ 09/70
MAGNETTE 1.6	--	03/61 ⇨ 09/68
MGB 1.8	--	05/62 ⇨ 12/80
MGB GT 1.8	--, 18G	07/65 ⇨ 11/80
MORRIS		
MARINA 1.8	--	04/71 ⇨ 12/79
MARINA 1.8 TC	--	04/71 ⇨ 09/75
MARINA 1300	--	04/71 ⇨ 06/80
MARINA 1800	--	04/71 ⇨ 12/75
MARINA 1800 TC	--	04/71 ⇨ 12/75
MINOR 1.1	--	01/62 ⇨ 10/71
OXFORD 1.7	--	05/62 ⇨ 04/70
RELIANT		
REBEL 700	--	01/68 ⇨ 08/71
REBEL 750	--	08/71 ⇨ 12/73
ROBIN 850	--	11/73 ⇨ 10/02
RILEY		
4/72 1.7	--	03/61 ⇨ 10/68
ELF 1.0	--	03/63 ⇨ 10/68
KESTREL 1300	12H	03/67 ⇨ 12/69
ROVER		
2000-3500 2200	--	10/73 ⇨ 05/76
A60 CAMBRIDGE 1.7	--	01/62 ⇨ 10/69
TALBOT		
AVENGER 1.3	--	02/70 ⇨ 07/81
AVENGER 1.6	--	02/70 ⇨ 07/81

TRIUMPH		
1300 1.3	--	01/65 ⇨ 12/70
1300 1.3 TC	--, GE1EH	01/67 ⇨ 12/70
1500 1.5	--, 1EH, 1EL	10/70 ⇨ 12/74
HERALD 1200	--, AJM	01/61 ⇨ 12/69
HERALD 13/60	--	01/67 ⇨ 12/71
TOLEDO 1300	--	10/70 ⇨ 12/77
TOLEDO 1500	--	10/70 ⇨ 12/77
TOLEDO 1500 TC	--	01/71 ⇨ 12/77
WOLSELEY		
16/60 1.6	--	01/61 ⇨ 12/71
18/85 1.8	--, 18HL	08/69 ⇨ 12/72
18/85 1.8 S	--, 18HH	01/70 ⇨ 12/72
1300 1.3	--, 12H	01/68 ⇨ 10/71
1300 1.3 TC	--, 12H	10/71 ⇨ 10/73

FACET 2.8078

04

DISTRIBUTOR CAPS

Adatt./Suitable: ***LUCAS***

FIAT
59321119
659321119

INNOCENTI
659321119

LAND ROVER
RTC3278

ROVER
GDC136

[03] **Supplied until depletion**
- Fornibile fino ad esaurimento delle scorte
- Fourni jusqu'à épuisement du stock
- Lieferbar solange vorrat reicht
- Suministrado hasta el stock termina

INNOCENTI		
MINI 120	--	01/75 ⇨ 12/83
LAND ROVER		
90 2.5 4x4	17H	09/85 ⇨ 08/90
110/127 2.5 4x4	17H	10/85 ⇨ 07/90
DEFENDER 2.25	--	01/87 ⇨
DEFENDER 2.5 90, 110	--	08/90 ⇨ 09/01
ROVER		
MINI 1.0	--	01/85 ⇨

FACET 2.8083PHT

07

DISTRIBUTOR CAPS

Adatt./Suitable: ***LUCAS***

FORD
6 077 487
81SF-12106-DA

Motorcraft
EDH 128

[03] **Supplied until depletion**
- Fornibile fino ad esaurimento delle scorte
- Fourni jusqu'à épuisement du stock
- Lieferbar solange vorrat reicht
- Suministrado hasta el stock termina

FORD		
ESCORT III 1.3	JPA	09/80 ⇨ 02/86
ESCORT III 1.6	LP1, LPA	09/80 ⇨ 12/85
ORION I 1.3	JPA	07/83 ⇨ 03/86
ORION I 1.6	LP1, LPA	07/83 ⇨ 03/86

FACET 2.8085PHT — 04

DISTRIBUTOR CAPS

Adatt./Suitable: ***LUCAS***

JAGUAR
AEU 1502
JLM 9528

[03] **Supplied until depletion**
- Fornibile fino ad esaurimento delle scorte
- Fourni jusqu'à épuisement du stock
- Lieferbar solange vorrat reicht
- Suministrado hasta el stock termina

JAGUAR		
XJ 4.2i Series 3	--	01/86 ⇨ 12/94

FACET 2.8091PHT — 07

DISTRIBUTOR CAPS

Adatt./Suitable: ***LUCAS***

BOSCH
F 005 X04 656
F 005 X04 666

LAND ROVER
605190
RTC3197
STC8368

ROVER
STC8368

LAND ROVER		
DEFENDER 3.5 4x4	15G, 21G, 22D	09/90 ⇨ 12/98
DISCOVERY I 3.5	--	09/89 ⇨ 06/94
DISCOVERY I 3.5 4x4	22D	06/89 ⇨ 06/94
DISCOVERY I 4.0 4x4	35D, 36D	09/93 ⇨ 10/98
RANGE ROVER I 3.5 4x4	31D	01/87 ⇨ 09/90
RANGE ROVER I 3.5 Vogue 4x4	11D, 24D, 25D	08/81 ⇨ 09/90
RANGE ROVER I 3.9 4x4	35D	11/88 ⇨ 12/92
RANGE ROVER I 3.9 Cat 4x4	37D, 38D	11/88 ⇨ 07/94
RANGE ROVER I 3.9 Vogue SEI 4x4	35D, 36D	11/88 ⇨ 07/94
RANGE ROVER I 4.3 Vogue LSE 4x4	40D	09/92 ⇨ 07/94

FACET 2.8093PHT — 07

DISTRIBUTOR CAPS

Adatt./Suitable: ***LUCAS***

BOSCH
F 005 X13 537

LAND ROVER
NJD10010

ROVER
AUU1186
GDC152
GDC160
GDC377
GDC384
NJD10010

AUSTIN		
MONTEGO 1.6 LS	16HC37	10/84 ⇨ 08/88
MONTEGO 1.6 LS, HL	16HC37	04/84 ⇨ 08/88
MONTEGO 2.0	20HSC	04/84 ⇨ 08/88
MONTEGO 2.0 Turbo	20HC85	04/84 ⇨ 08/88
LAND ROVER		
FREELANDER 1.8 16V 4x4	18K4F	04/98 ⇨ 10/06
FREELANDER 1.8 i 16V 4x4	18K4F	02/98 ⇨ 10/06
MG		
MGF 1.8 i 16V	18K4F	03/95 ⇨ 03/02
MG TF 115	16K4F	03/02 ⇨ 12/09
MG TF 120	18K4F	03/02 ⇨ 12/09
MG TF 135	18K4F	03/02 ⇨ 12/09
MG ZR 105	14K4F	06/01 ⇨ 04/05
MG ZR 120	18K4F	06/01 ⇨ 04/05
ROVER		
25 1.4 16V	14K4F, 14K4M	10/99 ⇨ 05/05
25 1.6 16V	16K4F	10/99 ⇨ 05/05
25 1.8 16V	18K4F	10/99 ⇨ 05/05
100 / METRO 111 C/L/S	11K2D	03/90 ⇨ 12/98
100 / METRO 114 GSi	14K4F	10/94 ⇨ 10/95
100 / METRO 114 GTI 16V	14K4C, 14K4D, 14K4F	03/90 ⇨ 12/98
100 / METRO 114 GTI/GT 16V Cat	14K4C, 14K4D	03/90 ⇨ 12/98
100 / METRO 114 S/L/GTA	14K2D	03/90 ⇨ 12/98
100 111	11K2D	04/94 ⇨ 10/97
100 114	14K2D	04/94 ⇨ 10/97
200 II 214	14K2A, 14K2D	09/93 ⇨ 12/95
200 II 214 1.4	14K4C, 14K4D	01/92 ⇨ 11/99
200 II 214 1.4i 16V	14K4F	01/93 ⇨ 11/99
200 II 214 GSi/Si	14K4C, 14K4F	01/90 ⇨ 10/95
200 II 214 Si/Gsi	14K4C, 14K4D	10/89 ⇨ 10/95
200 II 216	16K4F	01/96 ⇨ 12/97
200 II 216 1.6i 16V	16K4F	01/96 ⇨ 11/99
200 II 220 16V	--	01/92 ⇨ 12/95
200 II 220 GSi	1CA4GA15-01	05/94 ⇨ 06/99
200 II 220 GTi	1CA4GA15-01, 20M4F	09/91 ⇨ 10/95
200 II 220 Turbo	20T4G	10/92 ⇨ 06/99
200 III 211	11K2D	01/98 ⇨ 03/00
200 III 214 i	14K2F	11/95 ⇨ 03/00
200 III 214 Si	14K4F	11/95 ⇨ 03/00
200 III 216 Si	16K4F	11/95 ⇨ 06/99
400 II 414 Si	14K4F	05/95 ⇨ 03/00
400 II 416 Si	16K4F, D16Y2	03/95 ⇨ 03/00
600 620 Ti Vitesse	20T4G	05/94 ⇨ 08/98
800 820	--	10/88 ⇨ 10/91
800 820 16V Turbo	T16	11/91 ⇨ 02/99
800 820 I/SI	1CA4GA15-01, 20HD	10/88 ⇨ 02/99
800 820 SI	20HDM16	10/88 ⇨ 12/91
800 820 Sport	20T4G	04/94 ⇨ 03/96
400 I 1.6 i	16K4F, D16A8	05/94 ⇨ 11/98
400 I 414	14K4C	01/93 ⇨ 04/95
400 I 414 GSI/SI	14K4C, 14K4D	04/90 ⇨ 04/95
400 I 414 GSI/SI Cat	14K4F	10/92 ⇨ 04/95
400 I 420 16V	--	01/91 ⇨ 12/92
400 I 420 GSI/SLI/GTI/Vite	1CA4GA15-01	01/93 ⇨ 04/95
400 I 420 GTI/GSI/Vitesse	20M4F	02/92 ⇨ 04/95
400 I 420 Turbo	20T4G	01/93 ⇨ 04/95
MAESTRO 1.6	16H	09/90 ⇨ 01/95
MAESTRO 2.0	--	01/86 ⇨
MONTEGO 2.0 GTi	20H	02/85 ⇨ 10/91

FACET 2.8094PHT — 04

DISTRIBUTOR CAPS

Adatt./Suitable: ***LUCAS***

Motorcraft
EDH 216

ROVER
GDC156

[00] **Eliminated on 04-08-2020. Please verify the availability through our local distributors**
- Eliminato il 04-08-2020. Verificare la disponibilità presso i nostri distributori
- Eliminé le 04-08-2020. Verifier la disponibilité auprès de nos distributeurs sur place
- Am 04-08-2020 gestrichen. Evtl. Verfügbarkeit bitte bei unseren Händlern prüfen
- Eliminado en fecha 04-08-2020. Verificar la disponibilidad a través de nuestros distribuidores locales

AUSTIN		
MONTEGO 1.3	--, 12HL	10/84 ⇨ 08/88
ROVER		
100 / METRO 111 C/L/S	11K2A	03/90 ⇨ 12/98
100 / METRO 114 S/L/GTA	14K2A	03/90 ⇨ 12/98
100 114	14K2A	04/94 ⇨ 10/97
2000-3500 2000	--	10/82 ⇨ 10/86
MAESTRO 1.3	12HE	09/90 ⇨ 01/95
MINI 1.3 Cooper	--	01/85 ⇨
MINI 1.3i Cooper	--	01/85 ⇨
MINI 1.3i Turbo	--	01/85 ⇨
MINI 1300	12A2A, 12A2B, 12A2D, 12A2E, 12A2L	01/91 ⇨ 04/95
MONTEGO 1.3	12HL	10/84 ⇨ 10/88

FACET 2.8096PHT — 04

DISTRIBUTOR CAPS

Adatt./Suitable: ***LUCAS***

FORD
6 153 386
84SF-12106-AA

Motorcraft
EDH 199

[00] **Eliminated on 01-09-2020. Please verify the availability through our local distributors**
- Eliminato il 01-09-2020. Verificare la disponibilità presso i nostri distributori
- Eliminé le 01-09-2020. Verifier la disponibilité auprès de nos distributeurs sur place
- Am 01-09-2020 gestrichen. Evtl. Verfügbarkeit bitte bei unseren Händlern prüfen
- Eliminado en fecha 01-09-2020. Verificar la disponibilidad a través de nuestros distribuidores locales

FORD		
ESCORT IV 1.4	F6D, FUA, FUC	01/86 ⇨ 07/90
FIESTA II 1.6 XR2	LUB, LUD	03/84 ⇨ 02/89
FIESTA III 1.4	F6E	03/89 ⇨ 12/95
ESCORT III 1.4 i	F6D, FUC	02/86 ⇨ 07/90
ORION I 1.4	FUA, FUC	12/85 ⇨ 07/90
ORION I 1.4 Cat	F6D	02/87 ⇨ 07/90

FACET 2.8098PHT — 07

DISTRIBUTOR CAPS

Adatt./Suitable: ***LUCAS***

JAGUAR
JLM 150

JAGUAR		
XJ 3.6	9DPALA, 9DPANA	10/86 ⇨ 05/91
XJ 4.0	9EPCNA, 9LPFRB	10/89 ⇨ 03/96
XJ 6 3.2 24V	9BPMNA	09/90 ⇨ 11/94
XJ 6 3.6	9DPANA, AJ6(3.6, 156KW)	10/86 ⇨ 08/89
XJ 6 4.0	9EPCNA	09/89 ⇨ 11/94
XJSC 3.6	9DPALA, 9DPANA	08/87 ⇨ 05/91
XJSC 4.0	9EPCNA, 9LPFRB	05/91 ⇨ 03/96

FACET 2.8099PHT — 07

DISTRIBUTOR CAPS

Adatt./Suitable: ***LUCAS***

GENERAL MOTORS
90 349 878
OPEL
12 11 266

[00] **Eliminated on 14-04-2020. Please verify the availability through our local distributors**

- Eliminato il 14-04-2020. Verificare la disponibilità presso i nostri distributori
- Eliminé le 14-04-2020. Verifier la disponibilité auprès de nos distributeurs sur place
- Am 14-04-2020 gestrichen. Evtl. Verfügbarkeit bitte bei unseren Händlern prüfen
- Eliminado en fecha 14-04-2020. Verificar la disponibilidad a través de nuestros distribuidores locales

OPEL		
KADETT E 1.6	16SV	09/86 ⇨ 12/91
KADETT E 1.6 i	16SV	07/89 ⇨ 02/93
KADETT E 1.6 S	16SV	09/86 ⇨ 08/91
VECTRA A 1.6	16SV	09/88 ⇨ 05/93
VECTRA A 1.6 S	16SV	09/88 ⇨ 05/93

FACET 2.8100PHT — 07

DISTRIBUTOR CAPS

Adatt./Suitable: ***LUCAS***

BOSCH
1 987 233 200
F 005 X13 536
GENERAL MOTORS
90 350 997
HOLDEN
90350997
OPEL
12 11 271
90350997

[03] **Supplied until depletion**

- Fornibile fino ad esaurimento delle scorte
- Fourni jusqu'à épuisement du stock
- Lieferbar solange vorrat reicht
- Suministrado hasta el stock termina

HOLDEN		
BARINA 1.4 i	C14NZ	04/94 ⇨ 07/97
BARINA_SB 1.2i	C12NZ	04/94 ⇨ 07/97
COMBO 1.4 i	C14NZ	03/96 ⇨ 07/97
COMBO_SB 1.4i	C14NZ	04/94 ⇨ 07/97

OPEL		
ASTRA F 1.4	14SE	09/92 ⇨ 09/98
ASTRA F 1.4 Si	C14SE	03/92 ⇨ 03/01
COMBO B 1.2	C12NZ	07/94 ⇨ 10/01
COMBO B 1.4	C14NZ	07/94 ⇨ 10/01
CORSA A 1.2 i	C12NZ	09/89 ⇨ 03/93
CORSA A 1.4 Si	C14SE	09/91 ⇨ 03/93
CORSA A 1.6 GSI	E16SE	05/88 ⇨ 03/92
CORSA B 1.2 i	12NZ, C12NZ	03/93 ⇨ 09/00
CORSA B 1.4 i	C14NZ	03/93 ⇨ 09/00
KADETT E 1.4 i	C14NZ	01/90 ⇨ 07/94
KADETT E 1.6	16SV	09/86 ⇨ 12/91
KADETT E 1.6 i	16SV	07/89 ⇨ 02/93
KADETT E 1.6 S	16SV	09/86 ⇨ 08/91
VECTRA A 1.6	16SV	09/88 ⇨ 05/93
VECTRA A 1.6 S	16SV	09/88 ⇨ 05/93

VAUXHALL		
ASTRA III 1.4 i	C14SE	03/91 ⇨ 03/01
COMBO B 1.2	C12NZ	07/94 ⇨ 10/01
COMBO B 1.4	C14NZ	07/94 ⇨ 10/01
CORSA B 1.2 i	C12NZ	03/93 ⇨ 09/00
CORSA B 1.4 i	C14NZ	03/93 ⇨ 09/00
CORSAVAN I 1.4 i	C14NZ	01/94 ⇨ 09/00

FACET 2.8101PHT — 05

DISTRIBUTOR CAPS

Adatt./Suitable: ***LUCAS***

BOSCH
1 987 233 113
NISSAN
22162-71J10
22162-94M01

[03] **Supplied until depletion**

- Fornibile fino ad esaurimento delle scorte
- Fourni jusqu'à épuisement du stock
- Lieferbar solange vorrat reicht
- Suministrado hasta el stock termina

NISSAN		
100NX 1.6	GA16DS	03/90 ⇨ 10/94
PRIMERA I 1.6	GA16DS	06/90 ⇨ 01/96
PRIMERA I 1.6 i	GA16DS	07/90 ⇨ 03/98
SUNNY II 1.4 LX	GA14S	10/88 ⇨ 08/91
SUNNY III 1.4	GA14DS	10/90 ⇨ 06/95
SUNNY III 1.4 i	GA14DS	10/90 ⇨ 05/95
SUNNY III 1.6 16V 4x4	GA16DS	11/90 ⇨ 05/95

NISSAN		
SUNNY III 1.6 i	GA16DE, GA16DS	10/90 ⇨ 03/00

FACET 2.8102 — 05

DISTRIBUTOR CAPS

Adatt./Suitable: ***LUCAS***

BOSCH
1 987 233 111
NISSAN
22162-70J00

[03] **Supplied until depletion**

- Fornibile fino ad esaurimento delle scorte
- Fourni jusqu'à épuisement du stock
- Lieferbar solange vorrat reicht
- Suministrado hasta el stock termina

NISSAN		
PRIMERA I 2.0	SR20DE	06/90 ⇨ 04/93
PRIMERA I 2.0 16V	SR20DI	06/90 ⇨ 01/96
PRIMERA I 2.0 16V 4x4	SR20DI	04/91 ⇨ 06/96
PRIMERA I 2.0 GT	SR20DE	06/90 ⇨ 01/96
PRIMERA I 2.0 GT 4x4	SR20DE	03/91 ⇨ 04/93
PRIMERA I 2.0 i	SR20DE	01/95 ⇨ 06/96
PRIMERA II 2.0 16V	SR20DE	08/99 ⇨ 12/01

FACET 2.8103 — 05

DISTRIBUTOR CAPS

Adatt./Suitable: ***LUCAS***

NISSAN
22162-71J00

[03] **Supplied until depletion**

- Fornibile fino ad esaurimento delle scorte
- Fourni jusqu'à épuisement du stock
- Lieferbar solange vorrat reicht
- Suministrado hasta el stock termina

NISSAN		
PRIMERA I 1.6	GA16DS	06/90 ⇨ 01/96

FACET 2.8104 — 05

DISTRIBUTOR CAPS

Adatt./Suitable: ***LUCAS***

BOSCH
1 987 233 110
NISSAN
22162-99B00

NISSAN		
MICRA II 1.0 i 16V	CG10DE	08/92 ⇨ 07/00
MICRA II 1.3 i 16V	CG13DE	08/92 ⇨ 09/00

FACET 2.8105 — 05

DISTRIBUTOR CAPS

Adatt./Suitable: ***LUCAS***

BOSCH
1 987 233 110

NISSAN
22162-41B00
22162-82J00

NISSAN		
MICRA II 1.3 i 16V	CG13DE	08/92 ⇨ 09/00
PRIMERA II 1.6 16V	GA16DE	09/96 ⇨ 07/02
PRIMERA I 1.6	GA16DE	06/93 ⇨ 01/96

FACET 2.8106 — 07

DISTRIBUTOR CAPS

Adatt./Suitable: ***LUCAS***

HONDA
30102-P1J-E01

ROVER
NJD100200

[03] **Supplied until depletion**
- Fornibile fino ad esaurimento delle scorte
- Fourni jusqu'à épuisement du stock
- Lieferbar solange vorrat reicht
- Suministrado hasta el stock termina

[211] **Resistance [kOhm] 5**
- Resistenza [kOhm] 5
- Résistance [kOhm] 5
- Widerstand [kOhm] 5
- Resistencia [kOhm] 5

HONDA		
CIVIC VI 1.4 16V	D14A7, D14A8	01/97 ⇨ 02/01
CIVIC VI 1.4 i	D14A8	06/95 ⇨ 02/01
CIVIC VI 1.4i	D14A6	01/99 ⇨
CIVIC VI 1.6 16V	D16B2	01/97 ⇨ 02/01
ROVER		
400 II 416 Si	D16Y2	03/95 ⇨ 03/00

FACET 2.8159 — 04

DISTRIBUTOR CAPS

Adatt./Suitable: ***MARELLI***

FIAT
9908338

GENERAL MOTORS
7 992 274

MAGNETI MARELLI
070005501010
700 055 01

FIAT		
500 0.5	110F.000, 120.000	01/60 ⇨ 12/75

FACET 2.8169 — 07

DISTRIBUTOR CAPS

Adatt./Suitable: ***MARELLI***

FIAT
9913860

FORD
A760-X12276-CA
A760-X12276-EA
A800-X12276-RA

SEAT
102312.06
NG1 023 020 6

[03] **Supplied until depletion**
- Fornibile fino ad esaurimento delle scorte
- Fourni jusqu'à épuisement du stock
- Lieferbar solange vorrat reicht
- Suministrado hasta el stock termina

FIAT		
124 1200	124A.000	07/66 ⇨ 10/73
124 1400 Special	124B2.000	12/68 ⇨ 12/72
124 1600 Special T	132AC.000	01/73 ⇨ 07/75
850 0.8	100G.000	07/64 ⇨ 10/72

FACET 2.8176 — 07

DISTRIBUTOR CAPS

Adatt./Suitable: ***MARELLI***

FIAT
9915391

GENERAL MOTORS
93 150 385

MAGNETI MARELLI
710 851 01

[00] **Eliminated on 21-07-2020. Please verify the availability through our local distributors**
- Eliminato il 21-07-2020. Verificare la disponibilità presso i nostri distributori
- Eliminé le 21-07-2020. Verifier la disponibilité auprès de nos distributeurs sur place
- Am 21-07-2020 gestrichen. Evtl. Verfügbarkeit bitte bei unseren Händlern prüfen
- Eliminado en fecha 21-07-2020. Verificar la disponibilidad a través de nuestros distribuidores locales

SEAT		
IBIZA I 0.9	09NCA	08/90 ⇨ 05/93
MARBELLA 0.9	08NCB, 100GL7000	01/87 ⇨ 10/98
MARBELLA 0.9 Cat	08NCB, 09NCB, 100GL7000	01/87 ⇨ 10/98

FACET 2.8181 — 04

DISTRIBUTOR CAPS

Adatt./Suitable: ***MARELLI***

FIAT
98080037
9919628
9920581

GENERAL MOTORS
7 992 280

MAGNETI MARELLI
710 613 03
711 275 01

ZASTAVA
1335050

[03] **Supplied until depletion**
- Fornibile fino ad esaurimento delle scorte
- Fourni jusqu'à épuisement du stock
- Lieferbar solange vorrat reicht
- Suministrado hasta el stock termina

FIAT		
128 1.1	128A.000	03/69 ⇨ 12/84
ZASTAVA		
101 1.1	128A.000, 128A.064	05/75 ⇨ 12/93
101 1.1 Super	128AC5.000	07/79 ⇨ 09/81

FACET 2.8182 — 07

DISTRIBUTOR CAPS

Adatt./Suitable: ***MARELLI***

FIAT
9911509
9921509

MAGNETI MARELLI
711 290 01

[03] **Supplied until depletion**
- Fornibile fino ad esaurimento delle scorte
- Fourni jusqu'à épuisement du stock
- Lieferbar solange vorrat reicht
- Suministrado hasta el stock termina

FIAT		
124 Spider, Sport [USA]	--	01/79 ⇨ 12/86
131 2.0 Brava [USA]	--	01/79 ⇨ 12/84
ARGENTA 2000	132D1.000	06/78 ⇨ 12/85

FACET 2.8186 — 04

DISTRIBUTOR CAPS

Adatt./Suitable: ***MARELLI***

FIAT
9924316
9925993

GENERAL MOTORS
7 992 978

MAGNETI MARELLI
071171101010
711 711 01

FIAT		
126 600	126A.000	09/72 ⇨ 06/77
500 0.6	111A000	08/68 ⇨ 01/76
FSO		
126P 0.6	--	09/72 ⇨ 07/77

FACET 2.8190 — 05

DISTRIBUTOR CAPS

Adatt./Suitable: ***MARELLI***

CITROËN
54 862 24

FIAT
9928250

GENERAL MOTORS
93 150 091

MAGNETI MARELLI
711 743 01

[03] **Supplied until depletion**
- Fornibile fino ad esaurimento delle scorte
- Fourni jusqu'à épuisement du stock
- Lieferbar solange vorrat reicht
- Suministrado hasta el stock termina

FIAT		
127 1.0	127A.000	01/77 ⇨ 12/86
132 1.6	132C.000	05/77 ⇨ 09/82
ARGENTA 1600	132D.000	04/81 ⇨ 12/85
ARGENTA 1600 i.e	132D.000	04/81 ⇨ 12/85
FIORINO I 1.0	127A.000	01/80 ⇨ 12/87
FIORINO I 1050	127A.000	01/80 ⇨ 12/87
FIORINO I 900	100GL.000	10/77 ⇨ 10/86

FACET 2.8193 — 07

DISTRIBUTOR CAPS

Adatt./Suitable: ***MARELLI***

FIAT
82368100
9934728

GENERAL MOTORS
93 150 907

LANCIA
9934728

MAGNETI MARELLI
712 155 01

SEAT
NG2 155 013 1

[03] **Supplied until depletion**
- Fornibile fino ad esaurimento delle scorte
- Fourni jusqu'à épuisement du stock
- Lieferbar solange vorrat reicht
- Suministrado hasta el stock termina

FIAT		
132 2.0	132C2.000	01/76 ⇨ 06/81
ARGENTA 2000	132D1.000	06/78 ⇨ 12/85
ARGENTA 2000 i.e.	132C3.000	06/81 ⇨ 07/86
LANCIA		
A 112 1.0 Abarth	A112A2.000	03/78 ⇨ 02/84

FACET 2.8198PHT — 04

DISTRIBUTOR CAPS

Adatt./Suitable: ***MARELLI***

ALFA ROMEO
9950051

FIAT
9936027
9938272
9938359
9944630

FORD
1 641 610

LANCIA
9936027

MAGNETI MARELLI
071243702010
071366801010
712 437 01
712 437 02
712 437 04
712 437 05
713 668 01
713 668 02
71376201

Motorcraft
EDH 170
EDH 196
EDH 201
EDH 208
EDH 226

PEUGEOT
5941 43

RENAULT
77 01 025 240

SEAT
000 389 976 9
SE 141914.001B

FIAT		
CROMA I 1600	154A.048	12/85 ⇨ 12/90
CROMA I 2000 CHT	154A1.000, 154C5.000	12/85 ⇨ 09/92
CROMA I 2000 i.e.	834B.048	03/86 ⇨ 09/90
CROMA I 2000 i.e. Turbo	154A2.000	12/85 ⇨ 06/90
PANDA I 750	141B.000	01/86 ⇨ 01/95
PANDA I 900	100GL3.000	10/80 ⇨ 06/94
PANDA I 900 CL	146A.048	01/86 ⇨ 12/92
REGATA 1.6	--	09/86 ⇨ 06/89
REGATA 90 i.e. 1.6	149C2.000	01/87 ⇨ 07/89
TIPO I 1.4 i.e.	159A2.000	05/89 ⇨ 04/95
UNO 1.3 Turbo i.e.	146A2.000	04/85 ⇨ 08/89
UNO 45 0.9	146A.000, 146A1.000	03/83 ⇨ 07/96
UNO 45 0.9 Trend	146A.048	09/89 ⇨ 09/92
FORD		
ESCORT V RS Cosworth 4x4	N5F	10/91 ⇨ 01/95
LANCIA		
PRISMA 1.6	831B6.000	08/86 ⇨ 02/92
PRISMA 1.6 i.e.	831B7.000	05/86 ⇨ 12/89
PRISMA 2.0 i.e. Trazione integrale	831B4.000	04/86 ⇨ 12/89
PEUGEOT		
505 2.0	106E(XN1A)	09/85 ⇨ 09/95
RENAULT		
14 1.4	150	09/79 ⇨ 06/83
SEAT		
IBIZA I 0.9	146A000	08/86 ⇨ 05/93
MARBELLA 0.9	09NCA	01/87 ⇨ 12/93
TERRA 0.9	09NCA	02/87 ⇨ 12/96

FACET 2.8201PHT — 04

DISTRIBUTOR CAPS

Adatt./Suitable: ***MARELLI***

FIAT
82361914
9938273
9939787
9940656
9944794

FORD
6 542 391
V90H-F12106-AA

INNOCENTI
9944794

LANCIA
9939787

MAGNETI MARELLI
071246105010
071366701010
071366702010
712 461 04
712 461 05
712 461 06
712 462 03
713 667 01
713 667 02

PEUGEOT
5941 30

RENAULT
77 01 030 505

SEAT
000 398 090 7
SE 021914.001B

FIAT		
DUNA 60 1.1	146A6.000	01/87 ⇨ 12/91
DUNA 70 1.3	146A5.000	01/87 ⇨ 12/91
ELBA 1.3	146A5.000	04/91 ⇨ 02/95
FIORINO I 1.1 60	146A9.000	11/86 ⇨ 04/88
FIORINO I 1.3	146A5.000	12/87 ⇨ 08/93
FIORINO II 1.3	146A5.000	01/88 ⇨ 12/94
FIORINO II 60 1.1	146A9.000	05/88 ⇨ 12/93
FIORINO II 70 1.3	146A5.000	01/88 ⇨ 12/94
REGATA 1.1 60 , 60 L	138B.000	10/83 ⇨ 08/86
REGATA 1.6	149A.000	10/84 ⇨ 06/89
REGATA 70 1.3	138B2.000, 149A3.000	09/83 ⇨ 07/89
REGATA 85 1.5	149A5.000	05/85 ⇨ 12/87
REGATA 85 1.6	149A.000	10/83 ⇨ 06/90
RITMO I 1.1	146A4.048	04/85 ⇨ 12/87
RITMO I 1.3	149A3.000	11/83 ⇨ 08/85
TEMPRA 1.4 i.e.	159A2.000	04/90 ⇨ 08/96
TIPO I 1.4	160A1.000	07/87 ⇨ 12/89
TIPO I 1.4 i.e.	159A2.000	05/89 ⇨ 04/95
UNO 1.4 Turbo i.e.	146A8.000, 146A8.046	09/89 ⇨ 12/96
UNO 60 1.1	146A4.048, 146A6.000	05/85 ⇨ 02/92
UNO 60 1.1 SX	--	01/83 ⇨ 12/89
UNO CS 1.1	146A6.000	09/87 ⇨ 09/91
FIAT (BR)		
UNO 1.4i Turbo	1.4Mpi	01/94 ⇨ 12/96
UNO CS 1116	--	01/88 ⇨
FORD		
ESCORT V RS Cosworth 4x4	N5F	10/91 ⇨ 01/95
INNOCENTI		
ELBA 1.3	146A5.000	08/91 ⇨ 12/96
LANCIA		
DELTA I 1.1	831B8.000	01/86 ⇨ 12/90
DELTA I 1.3	1831B.000, 3831B.000, 831A2.000, 831B.000	09/79 ⇨ 10/92
PRISMA 1.3	831A2.000	01/83 ⇨ 12/89
Y10 1.3 i.e.	146A5.046, 156B.000	11/87 ⇨ 12/95
PEUGEOT		
305 1.5	117(XR5S)	05/80 ⇨ 09/82
RENAULT		
4 1.1	688712	02/78 ⇨ 06/90
9 1.1	C1E715	09/81 ⇨ 05/87
11 1.1	C1E715, C1E720	03/83 ⇨ 06/86
RAPID 1.1	C1E750, C1E760	07/85 ⇨ 04/95
SUPER 5 1.0	C1C700	10/84 ⇨ 10/88
SEAT		
IBIZA I 1.2	021A1000	11/84 ⇨ 12/93
MALAGA 1.2	021A1000	05/85 ⇨ 12/93
MALAGA 1.5	021A2000	05/85 ⇨ 12/93

FACET 2.8204PHT — 04

DISTRIBUTOR CAPS

Adatt./Suitable: ***MARELLI***

FIAT
9938274
9938360

INNOCENTI
9938360

LANCIA
9938360

MAGNETI MARELLI
712 461 07

FIAT		
CROMA I 1600	154A.048	12/85 ⇨ 12/90
ELBA 1.5	149C1.000	01/92 ⇨ 12/96
FIORINO I 1.5	149C1.000	01/88 ⇨ 08/93
FIORINO II 1.5 iE	149C1.000	01/88 ⇨ 10/92
FIORINO II 75 i.e. 1.5	149C1.000	05/88 ⇨ 12/93
REGATA 1.6	--	09/86 ⇨ 06/89
REGATA 100 Super 1.6	149A2.000	10/83 ⇨ 12/90
REGATA 85 1.5	149A5.000	05/85 ⇨ 12/87
RITMO I 1.5	138C2.048	10/85 ⇨ 05/87
RITMO I 1.6	149A4.000	01/83 ⇨ 12/87
RITMO II 75 1.5	138A2.000	09/85 ⇨ 12/88
TEMPRA 1.4 i.e.	160A1.046	04/90 ⇨ 08/96
TEMPRA 1.6	159A3.000, 159A3.048, 159A3.098	03/90 ⇨ 12/96
TEMPRA 1.6 i.e.	159A3.046, 159A3.048	06/90 ⇨ 08/96
TEMPRA 1.8 4x4	159A4.000	07/92 ⇨ 06/93
TEMPRA 1.8 i.e.	159A4.000, 159A4.046	03/90 ⇨ 08/96
TEMPRA 2.0	159A6.046	04/90 ⇨ 06/93
TEMPRA 2.0 i.e.	159A6.046	10/90 ⇨ 09/96
TEMPRA 2.0 i.e. 4x4	159A6.046	03/92 ⇨ 03/95
TIPO I 1.4	160A1.048	07/87 ⇨ 12/89
TIPO I 1.4 i.e.	160A1.046	05/89 ⇨ 04/95
TIPO I 1.6	159A3.048, 160A2.000, 835C1.000	01/88 ⇨ 10/95
TIPO I 1.6 i.e.	159A3.046, 159A3.048, 835C1.000	07/90 ⇨ 04/95
TIPO I 1.6 i.e. [BRA]	160E2.011	03/93 ⇨ 04/95
TIPO I 1.6 SX DGT	159A3.000	05/89 ⇨ 10/95
TIPO I 1.8 i.e.	159A4.000, 159A4.046	10/90 ⇨ 06/93
TIPO I 1.8 i.e.16V Sport	160A5.000	11/89 ⇨ 06/92
TIPO I 2.0	159A5.046, 159A6.046	10/90 ⇨ 10/92
TIPO I 2.0 16V	160A8.046	07/91 ⇨ 04/95
TIPO I 2.0 i.e.	159A5.046, 159A6.046	03/90 ⇨ 04/95
TIPO I 2.0 i.e. [BRA]	159A6.011	03/93 ⇨ 10/95
UNO 1.4 Super	146C2.028	09/89 ⇨ 09/92
UNO 70 1.3i SX	--	01/83 ⇨ 12/89
UNO 70 i.e. 1.4	146C1.000, 160A1.046	09/89 ⇨ 07/96
UNO 70 S 1.4	160A1.048	10/88 ⇨ 06/06
UNO 75 i.e. 1.5	138C2.048, 149C1.000	10/85 ⇨ 12/93
INNOCENTI		
ELBA 1.5 i.e.	149C1.000	08/92 ⇨ 09/94
LANCIA		
DEDRA 1.6 i.e.	835A1.000, 835A1.046	08/89 ⇨ 06/94
DELTA I 1.3	831A2.000, 831B.000	09/79 ⇨ 08/92
DELTA I 1.5	831A1.000, 831B1.000	09/79 ⇨ 12/92
PRISMA 1.5	831A1.000, 831B1.000	01/83 ⇨ 07/89

FACET 2.8209PHT — 04

DISTRIBUTOR CAPS

Adatt./Suitable: ***MARELLI***

FIAT
9939789

LANCIA
9939789

MAGNETI MARELLI
071302701010
713 027 01

FIAT		
FIORINO II 1.0 iE	156A2.246	11/92 ⇨ 04/96
PALIO 1.1	178B9.033	07/97 ⇨ 10/03
PANDA I 1.1	156C.046	05/91 ⇨ 03/95
PANDA I 1000	156A2.000, 156A2.100, 156A3.000	01/85 ⇨
PANDA I 1000 4x4	156A2.100, 156A2.246, 156A3.000	01/86 ⇨ 12/94
PANDA I 1000 CLX	156A2.000	05/91 ⇨ 12/94
PANDA I 1000 Fire	156A2.000	05/86 ⇨ 04/91
PANDA I 1000 Fire [CHE]	156A2.146	11/87 ⇨ 04/91
PANDA I 1000 Fire [DEU]	156A2.048	01/86 ⇨ 07/89
PANDA I 1000 i.e	156A2.246	08/92 ⇨ 02/04
PANDA I 1000 i.e. Cat	156A2.246	10/87 ⇨ 08/98
PANDA I 1100 i.e.	156C.046	01/86 ⇨ 04/91
PANDA I 1100 Trekking 4x4	156C.046	10/91 ⇨ 07/04
PANDA I 750	156A4.000	01/86 ⇨ 10/03
PANDA I 750 Cat	156A4.048	01/95 ⇨ 10/03
PANDA I 750 Fire	156A4.048	11/88 ⇨ 04/91
TIPO I 1.1	160A3.000	01/88 ⇨ 10/91
UNO 1.0	146A2.166	11/94 ⇨ 08/00
UNO 45 1.0	156A2.000, 156A2.100	06/86 ⇨ 12/93
UNO 45 1.0 Fire	--	01/83 ⇨ 12/89
UNO 45 i.e. 1.0	156A2.246	10/84 ⇨ 10/95
UNO 50 1.1	156C.046	01/90 ⇨ 12/93
UNO 50 i.e. 1.1	146C3.000	06/92 ⇨ 12/93
UNO 60 1.1	160A3.000	04/89 ⇨ 12/92
UNO Mondo 1.0	146A2.166	01/98 ⇨
UNO Mondo 1.0 [IND]	146A2.166	01/98 ⇨
LANCIA		
Y10 1.0 Fire	156A2.100	06/85 ⇨ 06/91
Y10 1.0 Fire Catalytic-Conv	156A2.246	10/87 ⇨ 02/92
Y10 1.0 Fire Trazione integrale	156A2.000, 156A2.100, 156A2.246	12/86 ⇨ 02/92
Y10 1.1 i.e Fire	156C.000	08/89 ⇨ 06/92
Y10 1.1 i.e Fire Trazione integrale	156C.000	08/89 ⇨ 06/92
Y10 1.1 i.e. Fire	156C.046	07/89 ⇨ 09/95

FACET 2.8210PHT — 08

DISTRIBUTOR CAPS

Adatt./Suitable: ***MARELLI***

JAGUAR
JLM 1909

MAGNETI MARELLI
713 528 01

[03] **Supplied until depletion**
- Fornibile fino ad esaurimento delle scorte
- Fourni jusqu'à épuisement du stock
- Lieferbar solange vorrat reicht
- Suministrado hasta el stock termina

JAGUAR		
XJ 5.3	8S(92-93)	05/91 ⇨ 08/93

JAGUAR		
XJ 6.0	8D	05/93 ⇨ 03/96
XJ V12 6.0	8C(92-94)	03/93 ⇨ 11/94
XJSC 5.3	8S(92-93)	05/91 ⇨ 08/93
XJSC 6.0	8D	05/93 ⇨ 03/96

FACET 2.8211PHT — 04

DISTRIBUTOR CAPS

Adatt./Suitable: ***MARELLI***

MAGNETI MARELLI
071358401010
713 584 01

RENAULT
77 01 034 946

RENAULT		
19 I 1.2i	E7F	01/89 ⇨ 12/92
19 I 1.4	E6J700, E6J701, E7J700	01/88 ⇨ 12/92
19 II 1.2	E7F730	05/92 ⇨ 09/94
19 II 1.4	E6J706, E7J706, E7J707, E7J742, E7J745	01/92 ⇨ 12/95
CLIO I 1.2	E5F710, E5F716, E7F700, E7F706, E7F708, E7F750	05/90 ⇨ 09/98
CLIO I 1.4	E6J712, E6J713, E6J718, E7J601, E7J710, E7J711, E7J716, E7J718, E7J719, E7J754, E7J756, E7J757	01/90 ⇨ 09/98
EXPRESS 1.4	E6J/E7J	01/85 ⇨ 10/90
MEGANE I 1.4	E7J764	09/96 ⇨ 08/03
MEGANE I 1.4 e	E7J764	01/96 ⇨ 08/03
MEGANE I 1.4 Eco	E7J624	01/96 ⇨ 03/99
MEGANE SCÉNIC I 1.4 i	E7J764	01/97 ⇨ 09/99
RAPID 1.4	E6J738, E7J720, E7J724, E7J726, E7J728, E7J770, E7J771, E7J773	09/91 ⇨ 03/98
RAPID 1.4 RN	E6J734	09/91 ⇨ 08/93

FACET 2.8214PHT — 04

DISTRIBUTOR CAPS

Adatt./Suitable: ***MARELLI***

FIAT
9944576
9946355

INNOCENTI
9946355

LANCIA
9944576

FIAT		
COUPE 2.0 16V	836A3.000	11/93 ⇨ 08/96
COUPE 2.0 16V [BRA]	836A3.011	11/93 ⇨ 08/96
ELBA 1.5	149C1.000	01/92 ⇨ 12/96
FIORINO I 1.5	149C1.000	01/88 ⇨ 08/93
FIORINO II 1.5 iE	149C1.000	01/88 ⇨ 10/92
FIORINO II 70 i.e. 1.4	146C5.000	05/94 ⇨ 05/01
FIORINO II 75 i.e. 1.5	149C1.000	05/88 ⇨ 12/93
TEMPRA 1.6	159A3.000, 159A3.048, 159A3.098	03/90 ⇨ 12/96
TEMPRA 1.6 i.e.	159A3.046, 159A3.048	06/90 ⇨ 08/96
TEMPRA 1.8 4x4	159A4.000	07/92 ⇨ 06/93
TEMPRA 1.8 i.e.	159A4.000, 159A4.046	03/90 ⇨ 08/96
TEMPRA 2.0	159A6.046	04/90 ⇨ 06/93
TEMPRA 2.0 i.e.	159A6.046	10/90 ⇨ 09/96
TEMPRA 2.0 i.e. [BRA]	159A6.011	04/93 ⇨ 12/96
TEMPRA 2.0 i.e. 4x4	159A6.046	03/92 ⇨ 03/95
TIPO I 1.6	159A3.048, 835C1.000	03/93 ⇨ 10/95
TIPO I 1.6 i.e.	159A3.046, 159A3.048, 835C1.000	07/90 ⇨ 04/95
TIPO I 1.6 i.e. [BRA]	160E2.011	03/93 ⇨ 04/95
TIPO I 1.8 i.e.	159A4.000, 159A4.046	10/90 ⇨ 06/93
TIPO I 2.0	159A5.046, 159A6.046, 836A3.011	10/90 ⇨ 04/95
TIPO I 2.0 16V	160A8.046	07/91 ⇨ 04/95
TIPO I 2.0 i.e.	159A5.046, 159A6.046	03/90 ⇨ 04/95
TIPO I 2.0 i.e. [BRA]	159A6.011	03/93 ⇨ 10/95
TIPO I 2.0 i.e. 16V Sport	836A3.000	03/93 ⇨ 04/95
UNO 1.4 Super	146C2.028	09/89 ⇨ 09/92
UNO 70 i.e. 1.4	146C1.000, 160A1.046	09/89 ⇨ 07/96
UNO 70 S 1.4	160A1.048	10/88 ⇨ 06/06
UNO 75 i.e. 1.5	149C1.000	10/85 ⇨ 12/93
UNO Mondo 1.4 Super	146C2.028	01/96 ⇨
FIAT (BR)		
COUPÈ 2.0i 16V	2.0Mpi	01/95 ⇨ 12/97
TIPO 2.0i 16V	2.0Mpi	01/94 ⇨ 12/95
INNOCENTI		
ELBA 1.4 i.e.	146C5.000	09/94 ⇨ 12/96
ELBA 1.5 i.e.	149C1.000	08/92 ⇨ 09/94
MILLE 1.4	160A1046	07/95 ⇨ 05/97
LANCIA		
DEDRA 1.6	835A1000	07/94 ⇨ 02/97
DEDRA 2.0 16V	836A3.000	07/94 ⇨ 07/99
DEDRA 2.0 i.e.	835A5.046	09/89 ⇨ 07/99
DEDRA 2.0 Integrale	836A3.000	07/94 ⇨ 07/99
DELTA II 2.0 16V	836A3.000	06/93 ⇨ 08/99

FACET 2.8215PHT — 04

DISTRIBUTOR CAPS

Adatt./Suitable: ***MARELLI***

ALFA ROMEO
9950519

FIAT
9944668
9947326
9950519

INNOCENTI
9944668

LANCIA
9944668

ALFA ROMEO		
164 2.0 Turbo	AR06476	10/87 ⇨ 09/98
FIAT		
CROMA I 2000 i.e.	154C3.000, 154C3.046, 834B.000, 834B.146	03/87 ⇨ 12/96
CROMA I 2000 i.e. Turbo	154C4.000, 154C4.046, 834C.146	11/86 ⇨ 08/96
FIORINO II 1.6	146C6.000	01/94 ⇨ 05/01
FIORINO II 75 i.e. 1.6	146C6.000	10/93 ⇨ 05/01
TEMPRA 1.4 i.e.	160A1.046	04/90 ⇨ 08/96
TEMPRA 1.6	159A3.000, 159A3.048, 159A3.098	03/90 ⇨ 12/96
TEMPRA 1.6 i.e.	159A3.046, 159A3.048	06/90 ⇨ 08/96
TEMPRA 1.8 4x4	159A4.000	07/92 ⇨ 06/93
TEMPRA 1.8 i.e.	159A4.000, 159A4.046	03/90 ⇨ 08/96
TEMPRA 2.0	159A6.046	04/90 ⇨ 06/93
TEMPRA 2.0 i.e.	159A6.046	10/90 ⇨ 09/96
TEMPRA 2.0 i.e. [BRA]	159A6.011	04/93 ⇨ 12/96
TEMPRA 2.0 i.e. 4x4	159A6.046	03/92 ⇨ 03/95
TIPO I 1.4 i.e.	160A1.046	05/89 ⇨ 04/95
TIPO I 1.6	159A3.048, 835C1.000	03/93 ⇨ 10/95
TIPO I 1.6 i.e.	159A3.046, 159A3.048, 835C1.000	07/90 ⇨ 04/95
TIPO I 1.6 i.e. [BRA]	160E2.011	03/93 ⇨ 04/95
TIPO I 1.6 SX DGT	159A3.000	05/89 ⇨ 10/95
TIPO I 1.8 i.e.	159A4.000, 159A4.046	10/90 ⇨ 06/93
TIPO I 2.0	159A5.046, 159A6.046	10/90 ⇨ 10/92
TIPO I 2.0 i.e.	159A5.046, 159A6.046	03/90 ⇨ 04/95
TIPO I 2.0 i.e. [BRA]	159A6.011	03/93 ⇨ 10/95
UNO 1.3 Turbo i.e.	146A2.246	09/89 ⇨ 03/91
FIAT (BR)		
TIPO 2.0i 8v	2.0Mpi	01/94 ⇨ 12/95
UNO 1.4i Turbo	1.4Mpi	01/94 ⇨ 12/96
INNOCENTI		
ELBA 1.6 i.e.	146C6.000	09/94 ⇨ 12/96
LANCIA		
DEDRA 1.6 i.e.	835A1.046	08/89 ⇨ 03/93
DEDRA 1.8 i.e.	835A2.000, 835A2.046, 835C5.000	09/89 ⇨ 07/99
DEDRA 2.0 HF Integrale	835A7.046	11/90 ⇨ 07/94
DEDRA 2.0 i.e.	835A5.000	09/89 ⇨ 07/92
DEDRA 2.0 i.e. Turbo	835A8.046	04/91 ⇨ 07/99
DEDRA 2.0 i.e. Turbo Integrale	835A7.000	04/90 ⇨ 08/91
DEDRA 2.0 Turbo	835A8.000	11/90 ⇨ 06/94
DELTA I 1.6 GT i.e.	149C2.000, 831B7.000	08/86 ⇨ 08/92
DELTA I 1.6 HF Turbo	831B3.000, 831B7.046	08/86 ⇨ 03/89
DELTA I 2.0 16V HF Evo Integrale	831E5.000	06/93 ⇨ 01/94
DELTA I 2.0 16V HF Integrale	831D5.000	03/89 ⇨ 09/91
DELTA I 2.0 HF Integrale	831B5.000, 831C5.000, 831C5.046	11/86 ⇨ 12/92
DELTA II 1.4 i.e.	160A1.046	10/94 ⇨ 08/99
THEMA 2000 i.e	834B1.000	09/88 ⇨ 05/92
THEMA 2000 i.e.	834B.146	09/87 ⇨ 05/92
THEMA 2000 i.e.Turbo	834C.146	07/86 ⇨ 05/90
THEMA 2000 Turbo	834C.146	12/88 ⇨ 03/92

FACET 2.8216PHT — 04

DISTRIBUTOR CAPS

Adatt./Suitable: ***MARELLI***

MAGNETI MARELLI
0.71374201.010
713 756 01
71374201

SEAT
030 905 207 A

SKODA
030 905 207 A

VW
030 905 207 A

SEAT		
AROSA 1.0	AER, ALL	05/97 ⇨ 06/04
AROSA 1.4	AEX, AKV, APQ	05/97 ⇨ 06/04
CORDOBA I 1.0 i	AER	09/96 ⇨ 10/02
CORDOBA I 1.4	ANX	12/97 ⇨ 04/99
CORDOBA I 1.4 i	AKV, APQ	06/94 ⇨ 12/02
CORDOBA I 1.4 i 16V	AFH	09/96 ⇨ 10/02
CORDOBA I 1.6 i	AEE, ALM	02/93 ⇨ 12/02
IBIZA II 1.0 i	AER	09/96 ⇨ 02/02
IBIZA II 1.4	ANX	12/97 ⇨ 04/99
IBIZA II 1.4 i	ABD, AEX, AKV, APQ	09/93 ⇨ 02/02
IBIZA II 1.4 i 16V	AFH	06/97 ⇨ 02/02
IBIZA II 1.6 i	AEE, ALM	03/93 ⇨ 02/02
INCA 1.4 i	AEX, AKV, APQ	11/95 ⇨ 06/03
INCA 1.6 i	1F, AEE	11/95 ⇨ 05/98
SKODA		
FELICIA 1.6	6A16XHT	06/97 ⇨ 04/02
FELICIA 1.6 GLX	6A16XHT	08/95 ⇨ 03/98
FELICIA 1.6 LX	6A16XHT	08/95 ⇨ 03/98
OCTAVIA I 1.6	6A16XHT	09/96 ⇨ 09/04
VW		
CADDY II 1.4	AEX, AKV, APQ	11/95 ⇨ 06/03
CADDY II 1.6	AEE	06/96 ⇨ 12/00
CADDY II 60 1.4	AEX, APQ	11/95 ⇨ 01/04
CADDY II 75 1.6	AEE	11/95 ⇨ 09/00
GOLF III 1.4	AEX	10/91 ⇨ 04/99
GOLF III 1.6	AEE	09/92 ⇨ 08/97
LUPO 1.0	AER, ALL	09/98 ⇨ 07/05
POLO III 1.4	AEX, AKV, ANX, APQ	05/97 ⇨ 09/01
POLO III 1.6	AEA, AEE, ALM	09/94 ⇨ 09/01
POLO III 100 1.4 16V	AFH	04/96 ⇨ 10/99
POLO III 50 1.0	AER, ALL	09/96 ⇨ 10/99
POLO III 54 1.4	ANX	01/98 ⇨ 08/99
POLO III 55 1.3	ADX	10/94 ⇨ 04/97
POLO III 55 1.4	AEX	08/95 ⇨ 10/99

VW		
POLO III 60 1.4	AEX, AKV, APQ	07/95 ⇨ 09/01
POLO III 75 1.6	AEA, AEE, AHS, ALM	10/94 ⇨ 09/01
POLO III 75 1.6 4motion	AEA	08/95 ⇨ 10/99
POLO IV 1.0	AER	08/96 ⇨ 12/01

FACET 2.8303/1

04

DISTRIBUTOR CAPS

Adatt./Suitable: ***MITSUBISHI***

BOSCH
F 005 X04 726

HYUNDAI
27110-21020
27110-21021
27110-21060
27110-32810
27120-11000

MAZDA
0324-24-310
AM15-18-V00
H612-24-310

MITSUBISHI
08605
27110-21060
27110-32810
MD602756
MD602949
MD607597
MD611604
MD611686
MD618210
T42271

NISSAN
22162-R9006
22162-R9007

FORD AUSTRALIA		
COURIER 1.8	--	01/79 ⇨ 12/84
COURIER 2.0	--	01/79 ⇨
LASER 1.3	E3	03/81 ⇨ 02/83
LASER 1.5	E5	03/81 ⇨ 02/83
LASER 1.5 Sport	E5	03/81 ⇨ 02/83
METEOR 1.3	--	04/82 ⇨ 09/85
HYUNDAI		
ELANTRA I 1.5	--	10/90 ⇨ 04/95
ELANTRA I 1.5 i GL	G4DJ	12/90 ⇨ 08/94
EXCEL 1.3	G4AN	07/85 ⇨ 07/91
EXCEL 1.5	G4AJ	07/85 ⇨ 08/89
H-1 I 2.4	G4CS	06/97 ⇨ 04/04
H-1 I 2.4 4WD	G4CS	02/98 ⇨ 04/04
H100 2.4	G4CS	07/93 ⇨ 12/04
LANTRA I 1.5	G4DJ	10/90 ⇨ 04/95
LANTRA I 1.5 i.e.	G4DJ	10/90 ⇨ 11/95
PONY 1.3	G13B	10/85 ⇨ 01/95
PONY 1.5	G15B, G4DJ	10/85 ⇨ 01/95
PONY 1.5 i	G15B, G4DJ	10/89 ⇨ 01/95
PONY / EXCEL 1.3	G4DG	01/90 ⇨ 01/95
PONY / EXCEL 1.5	G15B, G4DJ	01/90 ⇨ 01/95
PONY / EXCEL 1.5 i	G15B, G4DJ	01/90 ⇨ 01/95
PORTER I 2.4	G4CS	03/96 ⇨ 04/04
PRECIS 1.5 i [USA]	G4DJ	01/89 ⇨
SANTAMO 2.0 16V	G4JP	05/99 ⇨ 12/02
SANTAMO 2.0 16V 4x4	G4CP-D	05/99 ⇨ 12/02
S COUPE 1.5	G4DJA	03/90 ⇨ 12/92
S COUPE 1.5 i	G4DJ	02/90 ⇨ 05/96
SONATA II 2.4 i	G4CS	09/88 ⇨ 08/91
SONATA III 1.8 GLS	G4DM	07/96 ⇨ 05/98
SONATA III 1.8 i	G4CM	05/93 ⇨ 06/98
SONATA III 2.0 i	G4CP, G4EP	06/94 ⇨ 06/98
STELLAR 1.4	4G33	10/83 ⇨ 08/86
STELLAR 1.6	G32B	10/83 ⇨ 12/91
STELLAR 2.0	--	01/87 ⇨ 12/91
MAZDA		
929 I 2.0	MA	05/79 ⇨ 07/86
MITSUBISHI		
COLT I 1.2 GL	4G11	12/78 ⇨ 01/84
COLT III 1.3 GL	4G13(8V)	04/88 ⇨ 12/90
COLT III 1.5 GLXi	4G15(8V)	04/88 ⇨ 05/92
COLT II 1.3 EL,GL	G13B	06/86 ⇨ 04/88
CORDIA 1.8 [USA]	G62B	01/82 ⇨ 12/88
CORDIA 1.8 Turbo [USA]	G62B	01/82 ⇨ 12/88

MITSUBISHI		
LANCER V 1.2 GL	4G16	05/88 ⇨ 08/92
LANCER V 1.3	4G13(8V), G13B	04/88 ⇨ 05/92
LANCER V 1.3 GL	G13B	05/88 ⇨ 06/90
LANCER V 1.5	4G15(12V), 4G15(8V)	04/88 ⇨ 05/92
LANCER V 1.5 12V	4G15(12V)	05/89 ⇨ 05/92
LANCER V 1.5 GLS	4G15(12V)	08/89 ⇨ 08/92
LANCER V 1.8 4WD	4G37	03/89 ⇨ 06/92
LANCER III/IV 1.2	4G16	08/86 ⇨ 04/88
GALANT VI 1.6	4G32	01/88 ⇨ 10/92
GALANT VI 1.8	4G37	11/87 ⇨ 10/92
GALANT VI 2.0	4G63(SOHC8V)	11/87 ⇨ 12/92
GALANT VI 2.0 4WD	4G63(SOHC8V)	12/88 ⇨ 10/92
L200 II 1.6	4G32	04/87 ⇨ 10/96
L200 II 2.4	4G64(12V)	06/90 ⇨ 10/96
L200 II 2.6 4WD	G54B	11/89 ⇨ 05/95
MONTERO 2.4 16V	4G64(12V)	04/91 ⇨
MONTERO 2.6i [USA]	4G54	01/83 ⇨ 12/90
PAJERO I 2.6	4G54	01/83 ⇨ 11/90
PAJERO I 2.6 4WD	4G54	01/83 ⇨ 05/91
PAJERO II 2.4	4G64(12V)	04/91 ⇨ 04/00
PAJERO II 2.6 4WD	4G54	03/91 ⇨ 10/97
PAJERO III 2.4	4G64(12V)	10/01 ⇨ 08/06
PAJERO III 2.4 4x4	4G64(12V)	10/01 ⇨ 12/06
PAJERO SPORT II 2.4	4G64(16V)	07/08 ⇨
PRECIS 1.5 i [USA]	G4DJ	01/89 ⇨ 12/94
SHOGUN I 2.6 4x4	4G54	01/84 ⇨ 02/91
STARION 2.0 Turbo ECi	4G63-T(ECI), 4G63-T/C	06/82 ⇨ 08/87
TRUCK 2.4i [USA]	4G64	01/89 ⇨
TRUCK 2.6 [USA]	G54B	01/86 ⇨
VALLEY 2.4 i	4G64	09/92 ⇨ 10/94
NISSAN		
URVAN III 2.0	Z20	05/87 ⇨ 05/97

FACET 2.8322/9

07

DISTRIBUTOR CAPS

Adatt./Suitable: ***MITSUBISHI***

MAZDA
E594-24-310
FE01-24-310
FE01-24-310A

Motorcraft
EDH 189

[03] **Supplied until depletion**
- Fornibile fino ad esaurimento delle scorte
- Fourni jusqu'à épuisement du stock
- Lieferbar solange vorrat reicht
- Suministrado hasta el stock termina

FORD AUSTRALIA		
LASER 1.3	E3	03/83 ⇨ 09/85
LASER 1.5	E5	03/83 ⇨ 09/85
METEOR 1.3	--	04/82 ⇨ 09/85
METEOR 1.5	E5	04/82 ⇨ 09/85
TELSTAR 2.0 TX5	FE	05/83 ⇨ 10/87
MAZDA		
323 IV 1.1	E1	11/80 ⇨ 10/85
626 III 1.6	F6	11/82 ⇨ 09/87
626 III 2.0	FE(8V)	03/83 ⇨ 01/90
929 II 2.0	FE(8V)	03/84 ⇨ 07/87

FACET 2.8322/14

05

DISTRIBUTOR CAPS

Adatt./Suitable: ***MITSUBISHI***

BOSCH
1 987 233 112
F 005 X12 906

NISSAN
22162-23G15
22162-40F10
22162-78A10
22162-G5710
22162-G5711

NISSAN		
NAVARA I 2.4	Z24i	06/92 ⇨ 02/97
NX1600 1.6 [USA]	E16	01/87 ⇨ 12/90
PICK UP I 2.4 i [USA]	KA24E	01/89 ⇨
PICK UP I 2.4 i 12V	KA24E	04/92 ⇨ 02/98
PICK UP I 2.4 i 12V 4WD	KA24E	04/92 ⇨ 02/98
PULSAR NX 1.6 [USA]	E16	01/86 ⇨
SUNNY II 1.6 i	E16i	06/86 ⇨ 10/90
SUNNY II 1.6 i 12V	GA16i	06/86 ⇨ 06/91
SUNNY II 1.6 i 4x4	E16i	06/86 ⇨ 10/90
SUNNY III 1.4	GA14DS	10/90 ⇨ 06/95
SUNNY III 1.4 i	GA14DS	10/90 ⇨ 05/95
VANETTE II 2.0	Z20S	07/87 ⇨ 08/94

FACET 2.8322/16

07

DISTRIBUTOR CAPS

Adatt./Suitable: ***MITSUBISHI***

CHRYSLER
MD611 526

HYUNDAI
27110-36010

MITSUBISHI
MD611526

[03] **Supplied until depletion**
- Fornibile fino ad esaurimento delle scorte
- Fourni jusqu'à épuisement du stock
- Lieferbar solange vorrat reicht
- Suministrado hasta el stock termina

CHRYSLER		
LE BARON 3.0 i V6	6G72	01/90 ⇨ 12/96
VOYAGER I 3.0 i [USA]	EFA	10/84 ⇨ 07/90
VOYAGER 3.0 i	300, 6G72	01/91 ⇨ 09/95
VOYAGER 3.3	EGA	10/89 ⇨ 09/90
HYUNDAI		
GALLOPER 3.0 V6	G6AT	08/98 ⇨ 12/03
INNOVATION 3.0 V6	G6AT	05/00 ⇨
MITSUBISHI		
PAJERO I 3.0 i 4WD	6G72(SOHC12V)	05/88 ⇨ 05/91
PAJERO I 3.0 V6	6G72(SOHC12V)	11/88 ⇨ 11/90
PAJERO II 3.0 V6	6G72(SOHC12V)	12/90 ⇨ 12/95
PAJERO II 3.0 V6 4WD	6G72(SOHC12V)	12/90 ⇨ 12/95

FACET 2.8322/17 — 04

DISTRIBUTOR CAPS

Adatt./Suitable: ***MITSUBISHI***

MAZDA
FE1H-18-V00
FE1H-18-V00A
FEH1-18-V00A

[03] **Supplied until depletion**
- Fornibile fino ad esaurimento delle scorte
- Fourni jusqu'à épuisement du stock
- Lieferbar solange vorrat reicht
- Suministrado hasta el stock termina

FORD AUSTRALIA		
SPECTRON 2.0	OHC	01/84 ⇨
MAZDA		
929 III 2.2	--	01/86 ⇨ 12/91
929 III 2.2 12V	F2, F21, F267, F2E	02/87 ⇨ 05/89
929 III 2.2 i	F2-EGI	05/87 ⇨ 12/88

FACET 2.8322/18 — 07

DISTRIBUTOR CAPS

Adatt./Suitable: ***MITSUBISHI***

MAZDA
E5D5-18-V00A
MITSUBISHI
T45071

[03] **Supplied until depletion**
- Fornibile fino ad esaurimento delle scorte
- Fourni jusqu'à épuisement du stock
- Lieferbar solange vorrat reicht
- Suministrado hasta el stock termina

FORD AUSTRALIA		
LASER 1.3	E3	10/85 ⇨ 09/87
METEOR 1.3	--	10/85 ⇨ 09/87
MAZDA		
323 V 1.1	E1	09/85 ⇨ 10/89
323 V 1.3	E3, E391, E393	08/85 ⇨ 05/89
323 V 1.3 i	B3E	09/85 ⇨ 08/89
323 V 1.5	B5, B50, B53, E5	08/85 ⇨ 10/89

FACET 2.8322/20 — 04

DISTRIBUTOR CAPS

Adatt./Suitable: ***MITSUBISHI***

NISSAN
22162-25G10
22162-25G11
22162-A3514

NISSAN		
VANETTE II 1.5	A15	04/87 ⇨ 11/94

FACET 2.8322/21 — 04

DISTRIBUTOR CAPS

Adatt./Suitable: ***MITSUBISHI***

BOSCH
F 005 X04 740
FORD
4 132 265
F220 18V00 A
XM34-12106-BA
HYUNDAI
27110-02503
KIA
KK137-18V00
MF220-18-V00A
MAZDA
BP05-18-V00
F220-18-V00A
F2G8-18-V00
G609-18-V00
Motorcraft
DH 444
DHE 441

FORD		
ENDEAVOUR 2.6	--	10/06 ⇨
ENDEAVOUR 2.6 EFI	--	08/03 ⇨
EVEREST 2.6	--	10/06 ⇨
EVEREST 2.6 EFI	--	08/03 ⇨
RANGER IV 2.2	--	03/02 ⇨ 09/05
RANGER IV 2.2 EFI	--	03/99 ⇨
RANGER IV 2.6	--	10/02 ⇨ 09/04
RANGER IV 2.6 EFI	--	10/06 ⇨
HYUNDAI		
ATOS 1.0 i	G4HC	02/98 ⇨ 03/02
ATOS PRIME 1.0 i	G4HC	08/99 ⇨
KIA		
AVELLA 1.3	B3	11/95 ⇨ 12/01
AVELLA 1.5	--	02/97 ⇨ 12/01
CLARUS 2.0 i 16V	FE(16V)	07/96 ⇨
CREDOS 2.0 [AUS]	--	06/95 ⇨ 10/00
PRIDE 1.3	B3, B3A5	01/90 ⇨ 09/01
PRIDE 1.3 i [GBR]	--	01/90 ⇨
SEPHIA I 1.6 i	B6	09/93 ⇨ 10/97
MAZDA		
323 VI C 1.6	B6E	09/89 ⇨ 06/91
323 VI C 1.6 16V	B6	03/91 ⇨ 10/94
323 VI F 1.6	B6E	09/89 ⇨ 06/91
323 VI F 1.6 16V	B6	03/91 ⇨ 10/94
323 VI F 1.8 16V	BP	08/89 ⇨ 07/94
323 VI F 1.8 16V GT	BP(DOHC)	08/89 ⇨ 07/94
323 VI F 1.8i 16v GRSi	BP31	06/89 ⇨ 03/91
323 VI S 1.3 16V	B3(16V)	04/91 ⇨ 07/94
323 VI S 1.6	B6E	09/89 ⇨ 06/91
323 VI S 1.6 16V	B6	08/89 ⇨ 10/96
323 VI S 1.8 16V	BP52	08/89 ⇨ 07/94
323 VI S 1.8 16V 4WD	BP52	09/91 ⇨ 07/94
323 VI S 1.8 16V Turbo 4WD	BPTurbo	01/91 ⇨ 07/94
626 IV 2.0 16V	FE(16V)	06/87 ⇨ 05/92
626 IV 2.2 12V	F2	11/87 ⇨ 04/92
626 IV 2.2 12V 4WD	F2	11/87 ⇨ 07/90
B2600 2.6i 12v 4x4	R585	02/99 ⇨
B-SERIE 2.2 4WD	R5A2	02/99 ⇨ 11/06
323 VI 1.8i 16v 4x4	BP51	06/89 ⇨ 03/91
323 VI 1.8i 16v GRSi	BP22	06/89 ⇨ 03/91
323 VI 1.8i 16v GT Formula 4	BP55	04/91 ⇨ 04/94
323 VI 1.8i 16v GT-R Formula 4	BP5J	04/91 ⇨ 04/94
323 VI 1.8i 16v Turbo 4x4	BP55	06/89 ⇨ 03/91
E2000 2.0i 12v	FERW, FEY9	04/97 ⇨
E2000 2.0i 12v 4x4	FEJM, FEY9	09/90 ⇨ 08/99
BT-50 2.2	--, F2E	09/06 ⇨
BT-50 2.6	G6, G6Y1	09/06 ⇨
MPV I [USA] 2.6 12V	--	01/89 ⇨ 12/94
MPV I [USA] 2.6 12V AWD	--	01/89 ⇨ 12/94
MX-3 1.6	B69	05/91 ⇨ 10/93
PROTEGE 1.8i DOHC [USA]	--	01/90 ⇨
PROTEGE 1.8i OHC [USA]	--	01/90 ⇨

FACET 2.8322/22 — 05

DISTRIBUTOR CAPS

Adatt./Suitable: ***MITSUBISHI***

BOSCH
F 005 X12 889
FORD
KK 150 18 V00
HYUNDAI
KK150-18V00A
KIA
KK150-18V00
KK150-18-V00A
MAZDA
B303-18-V00
B3B1-18-V00
G602-18-V00
Motorcraft
DHE 439

[03] **Supplied until depletion**
- Fornibile fino ad esaurimento delle scorte
- Fourni jusqu'à épuisement du stock
- Lieferbar solange vorrat reicht
- Suministrado hasta el stock termina

FORD AUSTRALIA		
FESTIVA 1.3	--	01/91 ⇨
KIA		
PRIDE 1.1 i	B1	01/91 ⇨ 10/00
PRIDE 1.3 [GBR]	--	01/90 ⇨
PRIDE 1.3 i	--	01/90 ⇨ 05/97
MAZDA		
121 I 1.1	B115, B116	10/87 ⇨ 01/91
121 I 1.3	B3	10/87 ⇨ 06/91
323 V 1.6	93AF1006, B6E	09/86 ⇨ 10/95
323 V 1.6 4x4	B65M, B6E	05/90 ⇨ 03/93
323 V 1.6 GT	93AF1006	01/86 ⇨ 10/89
323 V 1.6i 16v Formula 4	B6F2	08/87 ⇨ 05/89
MPV I [USA] 2.6 12V	--	01/89 ⇨ 12/94
MPV I [USA] 2.6 12V AWD	--	01/89 ⇨ 12/94

FACET 2.8322/25 — 07

DISTRIBUTOR CAPS

Adatt./Suitable: ***MITSUBISHI***

BOSCH
1 987 233 117
MAZDA
B616-18-V00
F201-18-V00
Motorcraft
DHE 440

[03] **Supplied until depletion**
- Fornibile fino ad esaurimento delle scorte
- Fourni jusqu'à épuisement du stock
- Lieferbar solange vorrat reicht
- Suministrado hasta el stock termina

MAZDA		
323 V 1.6 GT	93AF1006	01/86 ⇨ 10/89
323 V 1.6i	B681, B682	06/86 ⇨ 07/87
323 V 1.6i 16v 4x4	B595	06/86 ⇨ 07/87
323 V 1.6i 16v Formula 4	B6F2	08/87 ⇨ 05/89
626 IV 1.8	F8(12V)	09/87 ⇨ 05/92
626 IV 2.0	FE(12V)	09/87 ⇨ 10/90
626 IV 2.0 12V	FE(12V), FEFJ, FEFK	09/87 ⇨ 05/92
626 IV 2.2 12V	F2	11/87 ⇨ 04/92
626 IV 2.2 12V 4WD	F2	11/87 ⇨ 07/90

FACET 2.8322/26 — 07

DISTRIBUTOR CAPS

Adatt./Suitable: ***MITSUBISHI***

BOSCH
F 005 X12 620
NISSAN
22162-41L11
22162-42L10
22162-42L11
22162-52H20

[03] **Supplied until depletion**
- Fornibile fino ad esaurimento delle scorte
- Fourni jusqu'à épuisement du stock
- Lieferbar solange vorrat reicht
- Suministrado hasta el stock termina

NISSAN		
PATROL GR I 4.2 Cat	TB42E	11/88 ⇨ 02/98

FACET 2.8322/31 — 04

DISTRIBUTOR CAPS

Adatt./Suitable: ***MITSUBISHI***

BOSCH
1 987 233 129
HOLDEN
3332162E10
MAZDA
B541-18-V00
MITSUBISHI
MD618364
Motorcraft
ADH 5071
SUZUKI
33321-62E10
33321-62E10-000

[03] **Supplied until depletion**
- Fornibile fino ad esaurimento delle scorte
- Fourni jusqu'à épuisement du stock
- Lieferbar solange vorrat reicht
- Suministrado hasta el stock termina

FORD AUSTRALIA		
LASER 1.6	B6(SOHC16V)	03/90 ⇨ 09/91
HOLDEN		
BARINA 1.3 GL	410UF015G02	02/89 ⇨ 05/94
MAZDA		
121 I 1.1	B115, B116	10/87 ⇨ 01/91
121 I 1.1 Unleaded Fuel	--	01/87 ⇨ 12/91
121 I 1.3	B3	04/89 ⇨ 10/90
121 I 1.3 Leaded Fuel	--	01/87 ⇨ 12/91
121 II 1.1	B1	11/90 ⇨ 10/93
323 III 1.5	B505, B535, B536	09/89 ⇨ 09/93
323 VI S 1.3	B383, B3E	09/89 ⇨ 06/91
323 VI S 1.3 16V	B3(16V)	04/91 ⇨ 07/94
323 VI S 1.6 16V	B6	08/89 ⇨ 10/96
323 VI 1.3 16V	B384, B386, B387	06/89 ⇨ 03/91
MITSUBISHI		
EXPO 2.4 i [USA]	4G64	01/91 ⇨ 12/92
GALANT VI 2.0	4G63(SOHC8V)	11/87 ⇨ 12/92
GALANT VI 2.0 4WD	4G63(SOHC8V)	12/88 ⇨ 10/92
LANCER V 1.8 4WD	4G37	03/89 ⇨ 06/92
LANCER V 1.8 GTi	4G37	06/92 ⇨ 07/93
LANCER VI 1.8 GTi	4G37	06/92 ⇨ 07/93

FACET 2.8322/32 — 04

DISTRIBUTOR CAPS

Adatt./Suitable: ***MITSUBISHI***

BOSCH
1 987 233 118
F 005 X04 730
FORD
4 006 232
XM34-12106-AA
HOLDEN
3332163B40
MAZDA
F829-18-V00
FE2S-18-V00
FE2S-18-V00A
FEEN-18-V00
SUZUKI
33321-63B40
33321-63B40-000

[03] **Supplied until depletion**
- Fornibile fino ad esaurimento delle scorte
- Fourni jusqu'à épuisement du stock
- Lieferbar solange vorrat reicht
- Suministrado hasta el stock termina

FORD		
RANGER IV 2.2	--	10/99 ⇨
HOLDEN		
BARINA 1.3 GL	410UF015G02	02/89 ⇨ 05/94
MAZDA		
121 I 1.1	B1, B116	10/87 ⇨ 10/90
121 I 1.3	B3	10/87 ⇨ 06/91
323 III 1.5	B505, B535, B536	09/89 ⇨ 09/93
323 IV 1.3	E3	09/81 ⇨ 10/85
323 V 1.3	B333, E3, E391, E393	08/85 ⇨ 05/89
323 V 1.3 i	B335	09/85 ⇨ 08/89
323 V 1.5	B5, B50, B53, E5	08/85 ⇨ 10/89
323 V 1.6	93AF1006, B6E	09/86 ⇨ 10/95
626 IV 1.8	F8(12V)	09/87 ⇨ 05/92
626 IV 2.0	FE(12V)	09/87 ⇨ 10/90
626 IV 2.0 12V	FE(12V), FEFJ, FEFK	09/87 ⇨ 05/92
929 III 2.0	FE(8V), FEFA	06/87 ⇨ 05/89
929 III 2.2	--	01/86 ⇨ 12/91
929 III 2.2 12V	F2, F21, F267, F2E	02/87 ⇨ 05/89
929 III 2.2 i	F2-EGI	05/87 ⇨ 12/88
929 III 2.2i 12v	F2E6, F2E7	06/89 ⇨ 09/92
E2000 2.0	FEBN, FECK, FEY7	11/87 ⇨ 05/95
E2000 2.0 4x4	FECK, FEY7	11/87 ⇨ 07/91
E E2000 4WD	FEBN	10/88 ⇨ 09/89
SUZUKI		
SWIFT I / II / III 1.3 GTi SOHC	G13B	10/89 ⇨ 12/95
SWIFT I / II / III 1.6	G16B	11/89 ⇨ 12/91
SWIFT I / II / III 1.6 4WD	G16B	11/89 ⇨ 12/91

FACET 2.8322/34 — 05

DISTRIBUTOR CAPS

Adatt./Suitable: ***MITSUBISHI***

MITSUBISHI
MD618297

[03] **Supplied until depletion**
- Fornibile fino ad esaurimento delle scorte
- Fourni jusqu'à épuisement du stock
- Lieferbar solange vorrat reicht
- Suministrado hasta el stock termina

MITSUBISHI		
COLT III 1.5 Cat	4G15(12V)	07/90 ⇨ 05/92
COLT IV 1.3 GLi 12V	4G13(12V)	04/92 ⇨ 04/96
LANCER V 1.3 12V	4G13(12V)	07/90 ⇨ 05/94
LANCER V 1.3 GL	4G13(12V)	07/90 ⇨ 08/92
LANCER V 1.5	4G15(12V)	09/88 ⇨ 09/92
LANCER V 1.5 12V	4G15(12V)	05/89 ⇨ 05/92
LANCER V 1.5 GLS	4G15(12V)	08/89 ⇨ 08/92
MIRAGE III 1.5	4G15(12V)	05/88 ⇨ 06/90
MIRAGE III 1.5 12V	4G15(12V)	05/88 ⇨ 06/90

FACET 2.8322/35 — 05

DISTRIBUTOR CAPS

Adatt./Suitable: ***MITSUBISHI***

MITSUBISHI
MD618374
MD626374

[00] **Eliminated on 14-04-2020. Please verify the availability through our local distributors**
- Eliminato il 14-04-2020. Verificare la disponibilità presso i nostri distributori
- Eliminé le 14-04-2020. Verifier la disponibilité auprès de nos distributeurs sur place
- Am 14-04-2020 gestrichen. Evtl. Verfügbarkeit bitte bei unseren Händlern prüfen
- Eliminado en fecha 14-04-2020. Verificar la disponibilidad a través de nuestros distribuidores locales

MITSUBISHI		
ECLIPSE I 1.8	4G37	12/89 ⇨ 03/94
GALANT VI 1.8	4G37	11/87 ⇨ 10/92

FACET 2.8322/36 — 05

DISTRIBUTOR CAPS

Adatt./Suitable: ***MITSUBISHI***

NISSAN
22162-94M11

[00] **Eliminated on 16-11-2021. Please verify the availability through our local distributors**
- Eliminato il 16-11-2021. Verificare la disponibilità presso i nostri distributori
- Eliminé le 16-11-2021. Verifier la disponibilité auprès de nos distributeurs sur place
- Am 16-11-2021 gestrichen. Evtl. Verfügbarkeit bitte bei unseren Händlern prüfen
- Eliminado en fecha 16-11-2021. Verificar la disponibilidad a través de nuestros distribuidores locales

NISSAN		
CABSTAR II 2.0	--	07/92 ⇨ 05/94
SUNNY II 1.4 LX	GA14S	10/88 ⇨ 08/91

FACET 2.8322/37 — 07,5

DISTRIBUTOR CAPS

Adatt./Suitable: ***MITSUBISHI***

BOSCH
F 005 X04 755
FORD
3 898 173
F32Z-12106-C
KL01-18V00-A
FORD USA
3 898 173
MAZDA
KL01-18-V00
KL01-18-V00A
Motorcraft
DHE 448

[03] **Supplied until depletion**
- Fornibile fino ad esaurimento delle scorte
- Fourni jusqu'à épuisement du stock
- Lieferbar solange vorrat reicht
- Suministrado hasta el stock termina

[211] **Resistance [kOhm] 5**
- Resistenza [kOhm] 5
- Résistance [kOhm] 5
- Widerstand [kOhm] 5
- Resistencia [kOhm] 5

FORD AUSTRALIA		
TELSTAR 2.5	KL-ZE	01/92 ⇨ 10/95
TELSTAR 2.5 TX5 EFi	KL-ZE	10/94 ⇨ 11/96
FORD USA		
PROBE II 2.5 V6 24V	KL	10/93 ⇨ 03/98
MAZDA		
626 V 2.5 24V	KL	01/92 ⇨ 04/97
626 V 2.5i V6 [USA]	--	01/94 ⇨
MX-3 1.8 i V6	K819	01/92 ⇨ 01/94
MX-6 2.5 24V	KL	02/92 ⇨ 09/97

FACET 2.8322/38 — 05

DISTRIBUTOR CAPS

Adatt./Suitable: ***MITSUBISHI***

BOSCH
1 987 233 122
MITSUBISHI
MD618555
MD618977

[03] **Supplied until depletion**
- Fornibile fino ad esaurimento delle scorte
- Fourni jusqu'à épuisement du stock
- Lieferbar solange vorrat reicht
- Suministrado hasta el stock termina

MITSUBISHI		
COLT IV 1.6 4WD	4G92(SOHC16V)	08/93 ⇨ 08/95
COLT IV 1.6 GLXi 16V	4G92(SOHC16V)	04/92 ⇨ 04/96
EXPOLRV 2.4i [USA]	4G64	01/92 ⇨
LANCER V 1.6 16V	4G92(SOHC16V)	06/92 ⇨ 05/94
LANCER V 1.6 4WD	4G92(SOHC16V)	06/92 ⇨ 11/93
LANCER VI 1.6 16V	4G92(SOHC16V)	06/92 ⇨ 10/03
LANCER VI 1.6 16V 4WD	4G92(SOHC16V)	06/92 ⇨ 10/03
SPACE RUNNER 1.8	4G93(SOHC16V)	10/91 ⇨ 08/99
SPACE RUNNER 1.8 4WD	4G93(SOHC16V)	10/91 ⇨ 08/99
SPACE WAGON 1.8	4G93(SOHC16V)	10/91 ⇨ 10/98
SPACE WAGON 1.8 4WD	4G93(SOHC16V)	10/91 ⇨ 10/98
SPACE WAGON 2.0	4G63(SOHC16V)	10/92 ⇨ 10/98
SPACE WAGON 2.0 4WD	4G63(SOHC16V)	10/92 ⇨ 10/98

FACET 2.8322/39 — 04

DISTRIBUTOR CAPS

Adatt./Suitable: ***MITSUBISHI***

CHEVROLET
93740920
DAEWOO
33321-78B40-000
93740920
TS100C00601
GENERAL MOTORS
93 740 920
SUZUKI
33321-78B40
33321-78B40-000

CHEVROLET		
SPARK I 0.8	F8CV	09/00 ⇨ 12/06
DAEWOO		
MATIZ 0.8	F8CV	08/98 ⇨

FACET 2.8322/40 — 04

DISTRIBUTOR CAPS

Adatt./Suitable: ***MITSUBISHI***

GENERAL MOTORS
96 064 788
SUZUKI
33321-56B10
33321-56B10-000

[03] **Supplied until depletion**
- Fornibile fino ad esaurimento delle scorte
- Fourni jusqu'à épuisement du stock
- Lieferbar solange vorrat reicht
- Suministrado hasta el stock termina

SUZUKI		
SIDEKICK 1.6i [USA]	--	01/91 ⇨
VITARA I 1.6 8V	--	01/90 ⇨ 12/98

FACET 2.8322/43 — 07,5

DISTRIBUTOR CAPS

Adatt./Suitable: ***MITSUBISHI***

BOSCH
F 005 X04 749
MITSUBISHI
MD618431
MD619176

[03] **Supplied until depletion**
- Fornibile fino ad esaurimento delle scorte
- Fourni jusqu'à épuisement du stock
- Lieferbar solange vorrat reicht
- Suministrado hasta el stock termina

MITSUBISHI		
SIGMA 3.0	6G72(SOHC12V)	06/92 ⇨ 10/96
SIGMA 3.0 V6	6G72(SOHC12V)	12/90 ⇨ 07/96

FACET 2.8322/44 — 04

DISTRIBUTOR CAPS

Adatt./Suitable: ***MITSUBISHI***

GENERAL MOTORS
96 068 686
SUZUKI
33321-58B10
33321-58B10-000

[03] **Supplied until depletion**
- Fornibile fino ad esaurimento delle scorte
- Fourni jusqu'à épuisement du stock
- Lieferbar solange vorrat reicht
- Suministrado hasta el stock termina

SUZUKI		
SIDEKICK 1.6i 16V JLX 4x4	G16B	04/89 ⇨ 04/96

FACET 2.8322/45 — 05

DISTRIBUTOR CAPS

Adatt./Suitable: ***MITSUBISHI***

SUBARU
22162-AA090

[03] **Supplied until depletion**
- Fornibile fino ad esaurimento delle scorte
- Fourni jusqu'à épuisement du stock
- Lieferbar solange vorrat reicht
- Suministrado hasta el stock termina

SUBARU		
LEGACY I 1.6	--	01/89 ⇨
LEGACY I 1.8	--	01/89 ⇨

FACET 2.8322/47 — 07

DISTRIBUTOR CAPS

Adatt./Suitable: ***MITSUBISHI***

MITSUBISHI
MD618760
MD618979

[00] **Eliminated on 08-06-2020. Please verify the availability through our local distributors**
- Eliminato il 08-06-2020. Verificare la disponibilità presso i nostri distributori
- Eliminé le 08-06-2020. Verifier la disponibilité auprès de nos distributeurs sur place
- Am 08-06-2020 gestrichen. Evtl. Verfügbarkeit bitte bei unseren Händlern prüfen
- Eliminado en fecha 08-06-2020. Verificar la disponibilidad a través de nuestros distribuidores locales

MITSUBISHI		
GALANT VII 1.8 GLSI	4G93(SOHC16V)	11/92 ⇨ 08/96
GALANT VII 2.0 GLSI	4G63(SOHC16V)	11/92 ⇨ 08/96
GALANT VII 2.0 GLSI 4WD	4G63(SOHC16V)	11/92 ⇨ 08/96

FACET 2.8322/49 — 07,5

DISTRIBUTOR CAPS

Adatt./Suitable: ***MITSUBISHI***

BOSCH
F 005 X04 751
MAZDA
KF34-18-V00

[03] **Supplied until depletion**
- Fornibile fino ad esaurimento delle scorte
- Fourni jusqu'à épuisement du stock
- Lieferbar solange vorrat reicht
- Suministrado hasta el stock termina

[211] **Resistance [kOhm] 5**
- Resistenza [kOhm] 5
- Résistance [kOhm] 5
- Widerstand [kOhm] 5
- Resistencia [kOhm] 5

FORD AUSTRALIA		
TELSTAR 2.5	KL-ZE	01/92 ⇨ 10/95
TELSTAR 2.5 TX5 EFi	KL-ZE	10/94 ⇨ 11/96
MAZDA		
323 VII 2.0 24V	KF	08/94 ⇨ 09/98
626 V 2.5 24V	KL	08/94 ⇨ 04/97
MILLENIA 2.5i [USA]	--	05/99 ⇨
MX-3 1.8 i V6	K838, K8-ZE	01/94 ⇨ 10/97
MX-6 2.5 24V	KL	02/92 ⇨ 09/97
MX-6 2.5 i 24V	KL	08/94 ⇨ 02/97
XEDOS 9 2.0	KF	08/98 ⇨ 08/00
XEDOS 9 2.0 24V	KF	08/93 ⇨ 01/00
XEDOS 9 2.5 24V	KL	07/93 ⇨ 07/00
XEDOS 9 2.5 V6	KL	07/00 ⇨ 09/02

FACET 2.8322/50 — 04

DISTRIBUTOR CAPS

Adatt./Suitable: ***MITSUBISHI***

BOSCH
1 987 233 123
FORD
F4BZ-12106-A
FORD AUSTRALIA
B 593-18-V00 A
KIA
MB593-18V00
MB593-18-V00A
MAZDA
B3S5-18-V00
B593-18-V00
B593-18-V00A

[211] **Resistance [kOhm] 5**
- Resistenza [kOhm] 5
- Résistance [kOhm] 5
- Widerstand [kOhm] 5
- Resistencia [kOhm] 5

FORD AUSTRALIA		
LASER 1.6 i	B6(DOHC16V)	10/94 ⇨ 03/99
LASER 1.8 i	BP(DOHC)	10/94 ⇨ 03/99
MAZDA		
323 VII C 1.5 16V	Z5-DE	08/94 ⇨ 09/98
323 VII C 1.8 16V	BP-ZE	08/94 ⇨ 09/98
323 VII 1.5 16V	Z5-DE	07/94 ⇨ 09/98
323 VII 1.8 16V	BP-ZE	08/94 ⇨ 09/98
323 VII P 1.5 16V	Z5-DE	10/96 ⇨ 09/98
323 VIII S 1.5 16V	Z5-DE	08/94 ⇨ 09/98
323 VIII S 1.8 16V	BP-ZE	08/94 ⇨ 09/98
DEMIO 1.3 16V	B3ME	08/98 ⇨ 07/03
DEMIO 1.5 16V	B5E	04/00 ⇨ 07/03
MX-3 1.6 i	B6D	11/93 ⇨ 09/98

FACET 2.8322/51 — 07

DISTRIBUTOR CAPS

Adatt./Suitable: ***MITSUBISHI***

BOSCH
F 005 X12 624
INFINITI
22162-0M811
NISSAN
22162-0M810
22162-0M811

[03] **Supplied until depletion**
- Fornibile fino ad esaurimento delle scorte
- Fourni jusqu'à épuisement du stock
- Lieferbar solange vorrat reicht
- Suministrado hasta el stock termina

[211] **Resistance [kOhm] 5**
- Resistenza [kOhm] 5
- Résistance [kOhm] 5
- Widerstand [kOhm] 5
- Resistencia [kOhm] 5

INFINITI		
G20 2.0	SR20DE	01/90 ⇨ 12/97
NISSAN		
PRIMERA I 2.0	SR20DE	07/94 ⇨ 01/98

FACET 2.8322/52 — 07

DISTRIBUTOR CAPS

Adatt./Suitable: ***MITSUBISHI***

BOSCH
F 00E 000 232
NISSAN
22162-70F10
22162-70F11

[03] **Supplied until depletion**
- Fornibile fino ad esaurimento delle scorte
- Fourni jusqu'à épuisement du stock
- Lieferbar solange vorrat reicht
- Suministrado hasta el stock termina

[211] **Resistance [kOhm] 5**
- Resistenza [kOhm] 5
- Résistance [kOhm] 5
- Widerstand [kOhm] 5
- Resistencia [kOhm] 5

NISSAN		
240SX 2.4	KA24DE	05/94 ⇨ 08/97

FACET 2.8322/54 — 07

DISTRIBUTOR CAPS

Adatt./Suitable: ***MITSUBISHI***

MAZDA
B3M5-18-V00

[00] **Eliminated on 06-07-2021. Please verify the availability through our local distributors**
- Eliminato il 06-07-2021. Verificare la disponibilità presso i nostri distributori
- Eliminé le 06-07-2021. Verifier la disponibilité auprès de nos distributeurs sur place
- Am 06-07-2021 gestrichen. Evtl. Verfügbarkeit bitte bei unseren Händlern prüfen
- Eliminado en fecha 06-07-2021. Verificar la disponibilidad a través de nuestros distribuidores locales

[211] **Resistance [kOhm] 5**
- Resistenza [kOhm] 5
- Résistance [kOhm] 5
- Widerstand [kOhm] 5
- Resistencia [kOhm] 5

MAZDA		
323 VII C 1.3 16V	B3(16V)	08/94 ⇨ 09/98
323 VII P 1.3 16V	B3(16V)	10/96 ⇨ 09/98
323 VIII F 1.4	B3(16V)	01/01 ⇨ 05/04
323 VIII F 1.4 16V	B3ME	09/98 ⇨ 01/01
323 VIII S 1.3	B3(16V)	01/01 ⇨ 05/04
323 VIII S 1.3 16V	B3(16V)	08/94 ⇨ 01/01

FACET 2.8322/55 — 05

DISTRIBUTOR CAPS

Adatt./Suitable: ***MITSUBISHI***

BOSCH
1 987 233 114
NISSAN
22162-72Y10

[03] **Supplied until depletion**
- Fornibile fino ad esaurimento delle scorte
- Fourni jusqu'à épuisement du stock
- Lieferbar solange vorrat reicht
- Suministrado hasta el stock termina

NISSAN		
SUNNY III 1.4	GA14DS	10/90 ⇨ 06/95
SUNNY III 1.4 i	GA14DS	10/90 ⇨ 05/95
SUNNY III 1.6 i	GA16DE, GA16DS	10/90 ⇨ 03/00

FACET 2.8322/58 — 07

DISTRIBUTOR CAPS

Adatt./Suitable: ***MITSUBISHI***

BOSCH
1 987 233 124
MITSUBISHI
MD618283
MD619186

[03] **Supplied until depletion**
- Fornibile fino ad esaurimento delle scorte
- Fourni jusqu'à épuisement du stock
- Lieferbar solange vorrat reicht
- Suministrado hasta el stock termina

MITSUBISHI		
COLT III 1.3 12V	4G13(12V)	04/88 ⇨ 05/92
COLT III 1.3 GL	4G13(8V)	04/88 ⇨ 12/90
COLT V 1.5	301353C	09/95 ⇨ 09/03
COLT V 1.5 16V	301353C	10/99 ⇨ 09/03
LANCER V 1.3	4G13(8V), G13B	04/88 ⇨ 05/92
LANCER V 1.3 12V	4G13(12V)	07/90 ⇨ 07/93
LANCER V 1.5	4G15(12V), 4G15(8V)	04/88 ⇨ 05/92
LANCER VI 1.5	4G15(12V)	09/92 ⇨ 07/96
LANCER VII 1.5	301353C	06/00 ⇨ 08/03
LANCER VII 1.5 16V	301353C	10/99 ⇨ 08/03

FACET 2.8322/61 — 07,5

DISTRIBUTOR CAPS

Adatt./Suitable: ***MITSUBISHI***

CHRYSLER
MD61 9050
MITSUBISHI
MD619050

[03] **Supplied until depletion**
- Fornibile fino ad esaurimento delle scorte
- Fourni jusqu'à épuisement du stock
- Lieferbar solange vorrat reicht
- Suministrado hasta el stock termina

[211] **Resistance [kOhm] 5**
- Resistenza [kOhm] 5
- Résistance [kOhm] 5
- Widerstand [kOhm] 5
- Resistencia [kOhm] 5

CHRYSLER		
CIRRUS 2.5 LX	EEB	10/94 ⇨ 09/00
SEBRING I 2.5 LE	EEB	05/95 ⇨ 12/96
STRATUS 2.5 LX	625H	04/96 ⇨ 04/01
STRATUS 2.5 LX V6	5RG225	12/95 ⇨ 04/01
STRATUS 2.5 V6	5RG225	12/95 ⇨ 04/01

FACET 2.8322/68 — 05

DISTRIBUTOR CAPS

Adatt./Suitable: ***MITSUBISHI***

MITSUBISHI
MD619363
MD619388
MD619468

[211] **Resistance [kOhm] 5**
- Resistenza [kOhm] 5
- Résistance [kOhm] 5
- Widerstand [kOhm] 5
- Resistencia [kOhm] 5

MITSUBISHI		
COLT V 1300 GL,GLX	4G13(12V)	05/96 ⇨ 06/00
LANCER VI 1.6 16V	4G92(SOHC16V)	12/92 ⇨ 10/03
LANCER VI 1.6 16V 4WD	4G92(SOHC16V)	12/92 ⇨ 10/03
LANCER VII 1.3 12V	4G13(12V)	12/95 ⇨ 08/03
SPACE STAR 1.3 16V	4G13(16V)	09/00 ⇨ 12/04

FACET 2.8322/69 — 07

DISTRIBUTOR CAPS

Adatt./Suitable: ***MITSUBISHI***

MITSUBISHI
MD619092
MD619387

[00] **Eliminated on 18-11-2019. Please verify the availability through our local distributors**
- Eliminato il 18-11-2019. Verificare la disponibilità presso i nostri distributori
- Eliminé le 18-11-2019. Verifier la disponibilité auprès de nos distributeurs sur place
- Am 18-11-2019 gestrichen. Evtl. Verfügbarkeit bitte bei unseren Händlern prüfen
- Eliminado en fecha 18-11-2019. Verificar la disponibilidad a través de nuestros distribuidores locales

[211] **Resistance [kOhm] 5**
- Resistenza [kOhm] 5
- Résistance [kOhm] 5
- Widerstand [kOhm] 5
- Resistencia [kOhm] 5

MITSUBISHI		
CARISMA 1.6	4G92(SOHC16V)	07/95 ⇨ 06/06
CARISMA 1.8	4G93(SOHC16V)	07/95 ⇨ 07/97

FACET 2.8322/70 — 04

DISTRIBUTOR CAPS

Adatt./Suitable: ***MITSUBISHI***

HYUNDAI
27110-02750

HYUNDAI		
ATOS 1.0 i	G4HC	02/98 ⇨ 03/02
ATOS PRIME 1.0 i	G4HC	08/99 ⇨

FACET 2.8322/72 — 04

DISTRIBUTOR CAPS

Adatt./Suitable: ***DAC***

CHEVROLET
93740943
DAEWOO
329010
93740943
GENERAL MOTORS
93 740 943

CHEVROLET		
SPARK I 0.8	F8CV	09/00 ⇨ 12/06
DAEWOO		
MATIZ 0.8	F8CV	08/98 ⇨

FACET 2.8342 — 04

DISTRIBUTOR CAPS

Adatt./Suitable: ***PAL***

SKODA
113 911 051
113 911 052

SKODA		
105,120 1.0	33*	08/76 ⇨ 12/89
105,120 1.0 105 S, L	742.10	08/76 ⇨ 12/90
105,120 1.0 105 S, L, GL	742.10	08/76 ⇨ 08/83
105,120 1.0 105 S, L, LS	742.10	10/83 ⇨ 12/90
105,120 1.2	37*, 55*	08/76 ⇨ 12/89
105,120 1.2 120 GLS	742.12X	02/83 ⇨ 12/90
105,120 1.2 120 L	742.12, 742.12X	08/76 ⇨ 12/90
105,120 1.2 120 LS	742.12X	08/76 ⇨ 12/90
130 1.3	43*	01/84 ⇨ 12/88
135 1.3	43*	01/87 ⇨ 12/89
136 1.3	46*	01/87 ⇨ 12/89

SKODA		
FAVORIT 1.3	135B, 136B, 781.135, 781.135E, OHC	08/91 ⇨ 06/97
FAVORIT 1.3 135	781.135	10/90 ⇨ 09/94
FAVORIT 1.3 135 X, LX, GLX	781.135E	01/90 ⇨ 09/94
FAVORIT 1.3 135L	781.135	05/89 ⇨ 09/94
FAVORIT 1.3 136	136L	10/90 ⇨ 09/94

FACET 2.8343

04

DISTRIBUTOR CAPS

Adatt./Suitable: ***PAL***

SKODA
004 026 254 A

SKODA		
FELICIA 1.3	061GW4G15K, 135, 135L, 136I	10/94 ⇨ 03/98

FACET 2.8543

04

DISTRIBUTOR CAPS

Adatt./Suitable: ***SEV***

GENERAL MOTORS
7 992 279
RENAULT
08 54 913 400
77 01 020 378
SEV-MARCHAL
S 4010

[03] **Supplied until depletion**
- Fornibile fino ad esaurimento delle scorte
- Fourni jusqu'à épuisement du stock
- Lieferbar solange vorrat reicht
- Suministrado hasta el stock termina

RENAULT		
4 0.8	800705	10/83 ⇨ 10/88

FACET 2.8625

05

DISTRIBUTOR CAPS

Adatt./Suitable: ***U.D.S.S.R.***

FIAT
9918275
GENERAL MOTORS
7 992 618
LADA
21010-3706500-00
2101-3706500
2107-3706500
38-37065-00

LADA		
LADA 1.2	--	01/80 ⇨
LADA 1.3	--	01/80 ⇨
LADA 1.5	--	01/80 ⇨
NIVA I 1600	BA32121, BA32121	12/76 ⇨ 12/93
RIVA 1.5	--	01/85 ⇨
RIVA 1.6	--	01/85 ⇨

FACET 2.8627PHT

05

DISTRIBUTOR CAPS

Adatt./Suitable: ***U.D.S.S.R.***

LADA
2108-3706500
2108-3706500-10

[03] **Supplied until depletion**
- Fornibile fino ad esaurimento delle scorte
- Fourni jusqu'à épuisement du stock
- Lieferbar solange vorrat reicht
- Suministrado hasta el stock termina

LADA		
SAMARA 1.5	--	01/97 ⇨
SAMARA 1100	BA321081	02/88 ⇨ 12/94
SAMARA 1300	BA32108	01/86 ⇨ 12/94
SAMARA 1500	BA321083	09/87 ⇨ 12/96

ROTORS

•DISTRIBUTORI •DISRUPTEURS •VERTEILERLÄUFER •ROTORES DEL DISTRIBUIDOR

(A) P/NRS. - NOTES

- CODICI - NOTE
- RÉFS. - NOTES
- ARTIKEL-NR. - ANMERKUNGEN
- CODIGOS - NOTAS

(B) PICTURE + TECHNICAL INFO

- FOTO + INFORMAZIONE TECNICA
- ILLUSTRATION + INFORMATION TÉCHNIQUE
- BILD + TECHNISCHE INFO
- FOTO + INFORMACIÓN TÉCNICA

(C) APPLICATION LIST

- GUIDA APPLICAZIONI
- LISTE D'APPLICATIONS
- ANWENDUNGSTABELLE
- LISTA DE APLICACIONES

3.8255RS — 1

ROTORS

Adatt./Suitable: ***MARELLI***

ALFA ROME (2)
993 817 3
995 004 7

FIAT
9338173

LANCIA
9938173

MAGNETI MARELLI
712 753 01

(4) **Resistance Rotor [Ohm] : 1000**
- Rotore resistenza [Ohm] : 1000
- Résitance roteur [ohm] : 1000
- Widerstand-Rotor [Ohm] : 1000
- Resistencia rotor [ohm] : 1000

ALFA ROMEO		
164 2.0 Turbo	AR06476	10/87 ⇨ 09/98
FIAT		
CROMA I 1600	154A.048	12/85 ⇨ 12/90
CROMA I 2000 CHT	154A1.000, 154C5.000	12/85 ⇨ 09/92
CROMA I 2000 i.e. Turbo	154A2.000	12/85 ⇨ 06/90
FIORINO I 1.5	149C1.000	01/88 ⇨ 08/93
FIORINO II 1.5 iE	149C1.000	01/88 ⇨ 10/92
FIORINO II 75 i.e. 1.5	149C1.000	05/88 ⇨ 12/93
REGATA 1.6	--	09/86 ⇨ 06/89
REGATA 100 Super 1.6	149A2.000	10/83 ⇨ 12/90
REGATA 85 1.5	149A5.000	05/85 ⇨ 12/87
RITMO I 1.5	138C2.048	10/85 ⇨ 05/87
RITMO I 1.6	149A4.000	01/83 ⇨ 12/87
RITMO II 75 1.5	138A2.000	09/85 ⇨ 12/88
TEMPRA 1.6	159A3.000, 159A3.048, 159A3.098	03/90 ⇨ 12/96
TEMPRA 1.6 i.e.	159A3.046, 159A3.048	06/90 ⇨ 08/96
TIPO I 1.4	160A1.048	07/87 ⇨ 12/89
TIPO I 1.4 i.e.	160A1.046	05/89 ⇨ 04/95
TIPO I 1.6	160A2.000	01/88 ⇨ 10/92
TIPO I 1.6 SX DGT	159A3.000	05/89 ⇨ 10/95
UNO 1.3 Turbo i.e.	146A2.000	04/85 ⇨ 08/89
UNO 1.4 Super	146C2.028	09/89 ⇨ 09/92
UNO 1.4 Turbo i.e.	146A8.000, 146A8.046	09/89 ⇨ 12/96

(A)

1. **# FACET**
2. **OEM P/NRS.**
   ·CODICI ORIGINALI
   ·RÉFS. D'ORIGINE
   ·ORIGINALTEILE-NR.
   ·CODIGOS ORIGINALES
3. **PACKAGING SIZE**
   ·FORMATO CONFEZIONE
   ·FORMAT DU CONDITIONNEMENT
   ·ABPACKENSGROESSE
   ·TAMAÑO DEL ENVASE
4. **NOTE**
   ·NOTE
   ·NOTES
   ·BERMERKUNGEN
   ·NOTAS

(B)

1. **PICTURE**
   ·FOTO
   ·PHOTO
   ·BILD
   ·FOTO

marketing@facet.it

FACET 3.7512RS — 1

ROTORS

Adatt./Suitable: ***BOSCH***

ALFA ROMEO
700 218
105 48 05 011 00/01
140 20 05 011 00/03
60739128

BMW
12 11 1 351 447
12 11 1 354 503
12 11 8 630 144

BOSCH
1 234 332 033
1 234 332 074
1 234 332 902

DAF
163792

FORD
0 425 981
1 142 596 1
1 142 598 1
1 451 676
71HM-12200-AA
DIFZ-12200-A

GENERAL MOTORS
06 682 671
7 992 284
7 992 285

Motorcraft
EDR 12
EDR 12 D
EDR 12 S
EDR 40
EDR 40 D

OPEL
17 84 226
17 84 235

PORSCHE
901 602 928 00

RENAULT
77 01 012 535
77 02 037 713

SAAB
78 63 236

VOLVO
240247
2402477
240305
2403053

VW
181 905 225

[212] **Resistance Rotor [Ohm] 5000**
- Rotore resistenza [Ohm] 5000
- Résitance roteur [ohm] 5000
- Widerstand-Rotor [Ohm] 5000
- Resistencia rotor [ohm] 5000

FORD		
CAPRI III 1.3	J1E	01/78 ⇨ 06/85
TRANSIT I 1.6	4RB	11/77 ⇨ 10/86
TRANSIT I 2.0	4RC	11/77 ⇨ 07/82
FORD AUSTRALIA		
CORTINA 2.0	--	06/77 ⇨ 08/82
ESCORT 2.0	--	01/77 ⇨ 12/81
ESCORT 2.0 RS	--	01/77 ⇨ 12/81
OPEL		
CORSA A 1.0	10S	09/82 ⇨ 03/93
CORSA A 1.2	12N, 12NC	09/82 ⇨ 08/90
CORSA A 1.2 N	12NC	01/85 ⇨ 10/87
KADETT B 1.1	11N	08/71 ⇨ 08/73
KADETT D 1.0	10N	09/79 ⇨ 08/82
KADETT E 1.2	12SC	09/84 ⇨ 07/86
MANTA B 1.3 N	13N	03/79 ⇨ 12/80
MANTA B 1.6 S	16S	09/75 ⇨ 12/81
MANTA B 1.9 N	19N	08/76 ⇨ 12/81
MANTA B 2.0	20N	08/77 ⇨ 12/80
RENAULT		
FUEGO 1.6 [USA] R1368	A7L752	01/82 ⇨ 12/84

FACET 3.7514RS — 1

ROTORS

Adatt./Suitable: ***BOSCH***

BOSCH
1 234 332 076
1 234 332 082
1 234 332 089

FORD
0 425 469
1 142 546 9

GENERAL MOTORS
7 992 286
7 992 640
7 992 887

VW
111 905 225 F
111 905 225 G

[212] **Resistance Rotor [Ohm] 5000**
- Rotore resistenza [Ohm] 5000
- Résitance roteur [ohm] 5000
- Widerstand-Rotor [Ohm] 5000
- Resistencia rotor [ohm] 5000

PEUGEOT		
204 1.1	XK, XK4, XK5	10/65 ⇨ 07/77
204 1.1 Grand Luxe	XK4	05/69 ⇨ 10/77
304 1.1	XK5	10/76 ⇨ 10/80
304 1.3	XL3, XL3S, XL5	03/70 ⇨ 10/80
304 1.3 GL	XL5	09/72 ⇨ 10/79
304 1.3 GT	XL3	10/69 ⇨ 09/75
404 1.6	XC6	04/63 ⇨ 12/71
404 1.6 GT	XC6	07/71 ⇨ 12/71
504 1.8	XM7	01/71 ⇨ 07/86
504 2.0	106(XN1)	03/71 ⇨ 07/86
505 1.8	105(XM7)	06/81 ⇨ 10/85
505 2.0	106(XN1)	11/80 ⇨ 12/85
RENAULT		
12 1.3	810.02, 810-02/97	10/69 ⇨ 08/80
TOYOTA		
STARLET 1.0	6A25BFXS	02/78 ⇨ 09/84
STARLET 1.2 S	3K-H	10/78 ⇨ 08/82
VW		
1500,1600 1.5	K	04/61 ⇨ 07/73
1500,1600 1.5 S	--	08/63 ⇨ 07/65
1500,1600 1.6	T, U	08/65 ⇨ 07/73
1500,1600 1.6 L	T, U	08/65 ⇨ 07/73
1500,1600 1.6 TL	T, U	08/65 ⇨ 07/73
KAEFER 1300 1.3	E	08/65 ⇨ 07/70
KAEFER 1500 1.5	4SC20M150Q6	08/66 ⇨ 11/73

FACET 3.7518RS — 1

ROTORS

Adatt./Suitable: ***BOSCH***

BOSCH
1 234 332 024
1 234 332 029
1 234 332 030
1 234 332 062
1 234 332 072
1 234 332 087
1 234 332 088

DAF
52 84 20

GENERAL MOTORS
7 992 289
7 992 878
7 992 883

INTERNATIONAL HARV.
883092R91

MERCEDES-BENZ
A 000 158 15 31
A 000 158 20 31

PORSCHE
616 602 221 00

VW
111 905 225 B
111 905 225 C
892 031 520

[212] **Resistance Rotor [Ohm] 5000**
- Rotore resistenza [Ohm] 5000
- Résitance roteur [ohm] 5000
- Widerstand-Rotor [Ohm] 5000
- Resistencia rotor [ohm] 5000

BMW		
1500-2000 2000	18F209	09/68 ⇨ 07/72
1502-2002 2002	M10B20A	02/68 ⇨ 07/75
BORGWARD		
ISABELLA 1.5	--	06/54 ⇨ 02/62
FORD		
TAUNUS 17M 1.7	--	08/57 ⇨ 11/60
MERCEDES-BENZ		
/8 230.6	M180.954	01/68 ⇨ 11/76
/8 250	M114.920	01/68 ⇨ 08/72
/8 250 2.8	M130.923	06/72 ⇨ 11/76
/8 250 C	M114.920	04/69 ⇨ 06/72
/8 250 C 2.8	M130.923	06/72 ⇨ 11/76
CLASSE S I 250 S	M108.920	01/66 ⇨ 12/69
CLASSE S I 250 SE	M129.980	01/66 ⇨ 12/67
CLASSE S I 280 S	M130.920	10/67 ⇨ 07/72
CLASSE S I 280 SE, SEL	M130.980	01/68 ⇨ 08/72
CLASSE SL I 190 SL	M121.921, M121.928	01/55 ⇨ 12/63
COUPE 220 SEB	M127.984	01/61 ⇨ 12/65
COUPE 250 SE	M129.980, M129.981	01/65 ⇨ 12/67
HECKFLOSSE 190 C	M121.924	04/61 ⇨ 08/65
HECKFLOSSE 200	M115.926, M121.940	07/65 ⇨ 02/68
HECKFLOSSE 220 B	M180.940	08/59 ⇨ 08/65
HECKFLOSSE 220 SB	M180.941	08/59 ⇨ 08/65
HECKFLOSSE 220 SEB	M127.982	08/59 ⇨ 08/65
HECKFLOSSE 230	M180.945, M180.949, M180.950	07/65 ⇨ 02/68
HECKFLOSSE 230 S	M180.947, M180.950	07/65 ⇨ 01/68
PAGODE 230 SL	M127.981	01/63 ⇨ 01/67
PAGODE 250 SL	M129.982	01/66 ⇨ 01/68
PAGODE 280 SL	M130.983	01/68 ⇨ 03/71
PONTON 220	M180.921	01/54 ⇨ 12/56
PONTON 220 S	M180.924	01/56 ⇨ 12/59
PORSCHE		
356 C 1600 SC	--	01/63 ⇨ 12/65
VW		
KAEFER 1.2	M51	01/54 ⇨ 07/65

FACET 3.7521RS — 1

ROTORS

Adatt./Suitable: ***BOSCH***

BOSCH
1 234 332 106
1 234 332 107
1 234 332 109

DAF
22 45 66

GENERAL MOTORS
7 992 290
7 992 888

MERCEDES-BENZ
A 000 158 21 31

PORSCHE
616 602 221 05

VOLVO
076978
0769786

VW
059 905 225
113 905 225 E

[03] **Supplied until depletion**
- Fornibile fino ad esaurimento delle scorte
- Fourni jusqu'à épuisement du stock
- Lieferbar solange vorrat reicht
- Suministrado hasta el stock termina

[212] **Resistance Rotor [Ohm] 5000**
- Rotore resistenza [Ohm] 5000
- Résitance roteur [ohm] 5000
- Widerstand-Rotor [Ohm] 5000
- Resistencia rotor [ohm] 5000

AUDI		
100 III 1.8	DR, DS, JW, NP, RS	08/82 ⇨ 07/89
100 III 1.8 quattro	JW, NP	10/84 ⇨ 07/88
MERCEDES-BENZ		
/8 200	M115.923, M115.926	01/68 ⇨ 01/77
COUPE 280 SE	M130.980, M130.984	01/67 ⇨ 12/71
NSU		
1000 C	--	08/63 ⇨ 12/72
PORSCHE		
356 A 1600	--	01/55 ⇨ 12/59
356 A 1600 S	616.15	01/55 ⇨ 12/59
356 A 1600 Super	616.15	01/55 ⇨ 12/59
356 B 1600	--	09/59 ⇨ 08/63
356 B 1600 Super 75	616.15	01/59 ⇨ 12/63
356 B 1600 Super 90	--	01/59 ⇨ 12/63
356 C 1600 SC	--	01/63 ⇨ 12/65
SAAB		
900 I 2.0 Turbo	B201XL	01/86 ⇨ 12/91
VW		
KAEFER 1200 1.2	D	01/60 ⇨ 12/85
KAEFER 1300 1.3	AB	01/70 ⇨ 01/73
KAEFER 1302 1.3	AB	08/70 ⇨ 08/72
KAEFER 1302 1.6	AD	01/70 ⇨ 01/73
KAEFER 1500 1.5	4SC20M150Q6	01/66 ⇨ 12/70
KARMANN GHIA 1500	4SC20M150Q6	01/66 ⇨ 12/69
KARMANN GHIA 1600	AD	01/70 ⇨ 12/73

FACET 3.7523RS — 3

ROTORS

Adatt./Suitable: ***BOSCH***

BOSCH
1 234 332 177

FIAT
9939707

GENERAL MOTORS
7 992 985

LANCIA
9939707

MERCEDES-BENZ
A 000 158 23 31

PEUGEOT
5937 21

PORSCHE
928 602 904 03

RENAULT
77 01 021 905

VOLVO
243922
2439222

[212] **Resistance Rotor [Ohm] 5000**
- Rotore resistenza [Ohm] 5000
- Résitance roteur [ohm] 5000
- Widerstand-Rotor [Ohm] 5000
- Resistencia rotor [ohm] 5000

ALPINE		
V6 GT	Z6W	01/85 ⇨ 12/90
LANCIA		
THEMA 2850 V6 i.e.	834E.000	11/84 ⇨ 09/88
MERCEDES-BENZ		
CLASSE S II 380 SE, SEL	M116.961	09/80 ⇨ 10/81
CLASSE S II 500 SE, SEL	M117.961	12/79 ⇨ 08/85
CLASSE SL III 380 SL	M116.960	09/80 ⇨ 08/81
RENAULT		
25 2.7 V6 Injection	Z7V708, Z7V709, Z7V711	04/84 ⇨ 08/89
25 2.8 V6 Injection	Z7W702	06/86 ⇨ 02/88
VOLVO		
240 2.8	B28E	10/80 ⇨ 09/84
260 2.8	B28E	08/80 ⇨ 07/85
760 2.8	B28A, B28E, B28F	08/81 ⇨ 07/88

FACET 3.7524RS — 3

ROTORS

Adatt./Suitable: ***BOSCH***

ALFA ROMEO
119 11 05 011 00/02
60735860

BMW
12 11 1 267 464
12 11 1 360 306

BOSCH
1 234 332 173
1 234 332 197
1 234 332 236
1 234 332 237
1 234 332 332

FORD
1 604 959
6 002 610
72TF-12200-AA
73TF-12200-AA
82TF-12200-AA

GENERAL MOTORS
7 992 630

MAN
51.26310-0002

MERCEDES-BENZ
A 000 158 22 31

Motorcraft
EDR 23
EDR 49
EDR 113

OPEL
1 46 015

PORSCHE
930 602 902 00

VOLVO
243657
2436574

VW
073 905 225

[212] **Resistance Rotor [Ohm] 5000**
- Rotore resistenza [Ohm] 5000
- Résitance roteur [ohm] 5000
- Widerstand-Rotor [Ohm] 5000
- Resistencia rotor [ohm] 5000

ALFA ROMEO		
6 2.0	AR01932	07/81 ⇨ 12/86
MERCEDES-BENZ		
CLASSE G I 280 GE	M110.994	11/79 ⇨ 08/89
CLASSE G II 280 GE	M110.994	04/92 ⇨
TRE VOLUMI I 280 E	M110.984	02/76 ⇨ 11/85
PUCH		
G-MODELL 280 GE	M110.994	01/86 ⇨ 12/91

FACET 3.7525RS

1

ROTORS

Adatt./Suitable: **BOSCH**

ALFA ROMEO
116 36 05 011 01/01
9927967
9950021

BOSCH
1 234 332 213
1 234 332 215
1 234 332 261

DAF
744625

FIAT
38326383
638326383
82288614
82316498
9927962
9927967
AXE2056

FORD
1 606 399
3 240 335
5 027 532
78MU-12200-A
82HF-12200-AA

GENERAL MOTORS
9 977 034
90 114 107

INNOCENTI
638326383

LANCIA
9927962

MERCEDES-BENZ
A 000 158 27 31
A 000 158 31 31

Motorcraft
DR 22
EDR 109

PEUGEOT
5937 32

PORSCHE
923 602 929 00

RENAULT
77 02 038 439

SAAB
83 55 950
93 06 697

SEAT
NG9 810 462 9

TALBOT
0013 52 9900
1352 99 00
1832 20 01

VOLVO
243796
243903
2439032

VW
027 905 225
043 905 225
181 905 225 C
ZBA 905 225 B

[212] **Resistance Rotor [Ohm] 5000**
- Rotore resistenza [Ohm] 5000
- Résitance roteur [ohm] 5000
- Widerstand-Rotor [Ohm] 5000
- Resistencia rotor [ohm] 5000

ALFA ROMEO		
ALFETTA 1.8	AR01608X	07/74 ⇨ 04/82
GIULIETTA I 1.3	AR01644	10/77 ⇨ 06/83
FIAT		
132 2.0	132C2.000	01/76 ⇨ 06/81
DUCATO I 1.8	169B	01/82 ⇨ 12/88
ARGENTA 2000	132D1.000	06/78 ⇨ 12/85
FIAT (BR)		
147 1.1	--	01/82 ⇨ 12/84
FORD		
CORTINA 1300	KL13H	10/70 ⇨ 03/72
ESCORT III 1.1	GSE	08/83 ⇨ 12/85
FIESTA I 0.9	TKA, TKW, TLA	05/76 ⇨ 08/83
FIESTA I 1.1	GLA, GLW	05/76 ⇨ 08/83
FIESTA I 1.6 XR2	L3E	08/81 ⇨ 08/83
FIESTA II 1.1	GLC, GSF	09/83 ⇨ 02/89
FIESTA II 1.3	JPC	09/83 ⇨ 09/89
SIERRA I 1.3	JCT	08/82 ⇨ 12/86
SIERRA I 2.0	NET, NYT	08/82 ⇨ 12/86
P 100 2.0	NAE	10/87 ⇨ 12/92
TRANSIT II 1.6	LAC, LAT	09/85 ⇨ 09/92
TRANSIT II 2.0	NAT, NAV, NAW, NBA, NCA	09/85 ⇨ 09/94
TRANSIT II 2.0 i	NCA	09/91 ⇨ 07/94
TRANSIT II 2.0 L	NAW, NAX	10/85 ⇨ 03/91
INNOCENTI		
MINI 120	--	01/75 ⇨ 12/83
LANCIA		
BETA 1600	828B.000	08/73 ⇨ 07/82
MERCEDES-BENZ		
0 309	M115.952	01/68 ⇨ 02/89
PEUGEOT		
205 I 1.5	Y2/K	02/84 ⇨ 10/87
309 I 1.5	Y2/K	06/87 ⇨ 12/89
PORSCHE		
924 2.0 Turbo	M31.03	06/80 ⇨ 10/86
TALBOT		
1307-1510 Simca 1307 1.3	--	07/75 ⇨ 01/80
SIMCA 1309	--	01/78 ⇨ 12/86
SOLARA 1.3	2M102.979	02/80 ⇨ 07/86
VOLVO		
240 1.8	B17A	11/78 ⇨ 07/85
240 2.0	0JX4G20A6L, B19ET	08/74 ⇨ 08/84
240 2.1 Turbo	B21ET, B21FT	08/80 ⇨ 07/85
VW		
JETTA II 1.6	EZ	01/84 ⇨ 07/92
CADDY I 1.6	EW, HN	01/83 ⇨ 07/92
GOLF II 1.6	EZ	08/83 ⇨ 07/92
GOLF II 1.6 [CHE] [SWE]	HM	08/83 ⇨ 07/85

FACET 3.7526RS

1

ROTORS

Adatt./Suitable: **BOSCH**

BOSCH
1 234 332 216
1 234 332 285

FIAT
9935782

GENERAL MOTORS
7 992 986
90 087 360
94 632 557

OPEL
12 12 213

PEUGEOT
5937 51
5940 52

SAAB
93 50 323
93 55 488

VW
052 905 225

[212] **Resistance Rotor [Ohm] 5000**
- Rotore resistenza [Ohm] 5000
- Résitance roteur [ohm] 5000
- Widerstand-Rotor [Ohm] 5000
- Resistencia rotor [ohm] 5000

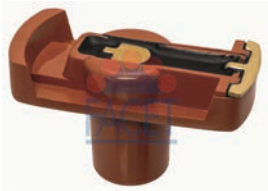

OPEL		
ASCONA C 1.3 N	13N	09/81 ⇨ 08/86
KADETT D 1.3 S	13S	08/79 ⇨ 08/84
PEUGEOT		
106 I 1.1	HDZ(TU1M)	09/91 ⇨ 04/96
106 I 1.4	K5A(TU3), TU3.2	08/91 ⇨ 03/96
205 II 1.1	HDZ(TU1M)	07/89 ⇨ 09/98
205 II 1.4	KDY(TU3M), KDZ(TU3M)	07/88 ⇨ 09/98
205 II 1.4 CJ	KDY(TU3M), KDZ(TU3M)	05/91 ⇨ 12/94
306 1.4	TU3	01/93 ⇨ 04/97
309 I 1.4	KDY(TU3M), KDZ(TU3M)	03/89 ⇨ 07/89
309 II 1.1	HDZ(TU1M)	08/90 ⇨ 12/93
309 II 1.4	KDZ(TU3M), TU3F2	07/89 ⇨ 12/93
309 II 1.6	XU5JA	07/89 ⇨ 12/93
309 II 1.6 GTi	--	09/89 ⇨ 10/93
405 I 1.4	TU3F2	01/87 ⇨ 12/92
405 I 1.9	D2C(XU92C)	07/87 ⇨ 12/92
405 II 1.4	TU3F2	01/93 ⇨ 12/96
405 II 1.9	XU92C	01/93 ⇨ 12/96
SAAB		
90 2.0	B20I	08/84 ⇨ 08/87
900 I 2.0 c	B201XC	09/79 ⇨ 12/88
900 I 2.0 i	0TLE4G15, B201XI	11/80 ⇨ 08/90
900 I 2.0 Turbo	B201XL	01/86 ⇨ 12/91
VW		
DERBY 1.1	HB	02/77 ⇨ 09/81
DERBY 1.3	HH	02/77 ⇨ 09/81
POLO II 1.1	HB	10/81 ⇨ 09/89
POLO II 1.3	GT, HH, HJ	10/81 ⇨ 07/88

FACET 3.7527RS

3

ROTORS

Adatt./Suitable: **BOSCH**

BMW
12 11 1 355 211
12 11 1 360 305
12 11 1 362 221
12 12 1 355 211

BOSCH
1 234 332 208
1 234 332 280
1 234 335 280

GENERAL MOTORS
7 992 638

VW
055 905 225

[03] **Supplied until depletion**
- Fornibile fino ad esaurimento delle scorte
- Fourni jusqu'à épuisement du stock
- Lieferbar solange vorrat reicht
- Suministrado hasta el stock termina

[212] **Resistance Rotor [Ohm] 5000**
- Rotore resistenza [Ohm] 5000
- Résitance roteur [ohm] 5000
- Widerstand-Rotor [Ohm] 5000
- Resistencia rotor [ohm] 5000

[310] **RPM to [1/min] 6600**
- N° giri fino a [1/min.] 6600
- Régime mot. jusqu'à [1/min] 6600
- Drehzahl bis [1/min] 6600
- vel. giro hasta [1/min] 6600

VW		
SCIROCCO II 1.6	1HyFAD	08/80 ⇨ 04/84

FACET 3.7534RS

3

ROTORS

Adatt./Suitable: **BOSCH**

BOSCH
1 234 332 204

GENERAL MOTORS
93 150 102

MERCEDES-BENZ
A 000 158 26 31

[00] **Eliminated on 05-10-2021. Please verify the availability through our local distributors**
- Eliminato il 05-10-2021. Verificare la disponibilità presso i nostri distributori
- Eliminé le 05-10-2021. Verifier la disponibilité auprès de nos distributeurs sur place
- Am 05-10-2021 gestrichen. Evtl. Verfügbarkeit bitte bei unseren Händlern prüfen
- Eliminado en fecha 05-10-2021. Verificar la disponibilidad a través de nuestros distribuidores locales

[03] **Supplied until depletion**
- Fornibile fino ad esaurimento delle scorte
- Fourni jusqu'à épuisement du stock
- Lieferbar solange vorrat reicht
- Suministrado hasta el stock termina

[212] **Resistance Rotor [Ohm] 5000**
- Rotore resistenza [Ohm] 5000
- Résitance roteur [ohm] 5000
- Widerstand-Rotor [Ohm] 5000
- Resistencia rotor [ohm] 5000

[310] **RPM to [1/min] 6650**
- N° giri fino a [1/min.] 6650
- Régime mot. jusqu'à [1/min] 6650
- Drehzahl bis [1/min] 6650
- vel. giro hasta [1/min] 6650

MERCEDES-BENZ		
CLASSE G I 280 GE	M110.994	11/79 ⇨ 08/89
CLASSE G II 280 GE	M110.994	04/92 ⇨

MERCEDES-BENZ		
CLASSE S II 280 S	M110.924	12/79 ⇨ 07/85
CLASSE SL III 280 SL	M110.986	06/76 ⇨ 09/81
CLASSE SL III 280 SLC	M110.986	06/76 ⇨ 09/81
TRE VOLUMI I 280 E	M110.984	02/76 ⇨ 11/85
PUCH		
G-MODELL 280 GE	M110.994	01/86 ⇨ 12/91

FACET 3.7545RS

3

ROTORS

Adatt./Suitable: ***BOSCH***

BOSCH
9 231 081 628
FIAT
7073054
GENERAL MOTORS
9 300 152
VW
040 905 225
71 314 347

[00] **Eliminated on 22-02-2022. Please verify the availability through our local distributors**
- Eliminato il 22-02-2022. Verificare la disponibilità presso i nostri distributori
- Eliminé le 22-02-2022. Verifier la disponibilité auprès de nos distributeurs sur place
- Am 22-02-2022 gestrichen. Evtl. Verfügbarkeit bitte bei unseren Händlern prüfen
- Eliminado en fecha 22-02-2022. Verificar la disponibilidad a través de nuestros distribuidores locales

[212] **Resistance Rotor [Ohm] 5000**
- Rotore resistenza [Ohm] 5000
- Résitance roteur [ohm] 5000
- Widerstand-Rotor [Ohm] 5000
- Resistencia rotor [ohm] 5000

FIAT (BR)		
147 1.1	--	01/76 ⇨ 12/81
PREMIO	--	01/85 ⇨ 12/88
UNO 1.05	1.05	01/85 ⇨ 12/87
UNO 1.3	1.3	01/85 ⇨ 12/91
UNO 1.3 Furgoneta	1.3	01/85 ⇨ 12/91
UNO CS 1.3	1.3	01/85 ⇨ 12/91
VOLKSWAGEN (BR)		
VWB 1.5	--	01/75 ⇨ 12/82

FACET 3.7549RS

3

ROTORS

Adatt./Suitable: ***BOSCH***

BOSCH
1 234 332 282
1 234 332 337
MERCEDES-BENZ
A 000 158 36 31
PEUGEOT
5937 26

[212] **Resistance Rotor [Ohm] 1000**
- Rotore resistenza [Ohm] 1000
- Résitance roteur [ohm] 1000
- Widerstand-Rotor [Ohm] 1000
- Resistencia rotor [ohm] 1000

MERCEDES-BENZ		
CLASSE S II 380 SE, SEL	M116.963	10/81 ⇨ 08/85
CLASSE S II 380 SEC	M116.963	10/81 ⇨ 07/85
CLASSE S II 500 SE, SEL	M117.963	12/79 ⇨ 08/85
CLASSE S II 500 SEC	M117.963	08/80 ⇨ 08/85
CLASSE SL III 380 SL	M116.962	09/80 ⇨ 08/85
PEUGEOT		
604 2.7 SL	112(ZM)	08/77 ⇨ 05/83
604 2.7 TI, STI	140(ZMJ)	08/77 ⇨ 05/83
TALBOT		
TAGORA 2.6	9L6	08/81 ⇨ 10/83

FACET 3.7555RS

1

ROTORS

Adatt./Suitable: ***BOSCH***

ALFA ROMEO
115 44 05 011 00/02
60723008
60752000
AUDI
035 905 225 B
055 905 225 B
BMW
12 11 1 272 144
BOSCH
1 234 332 300
1 234 332 301
1 234 332 309
1 234 332 359
GENERAL MOTORS
90 141 495
MERCEDES-BENZ
A 000 158 34 31
OPEL
12 12 216
PEUGEOT
5937 31
PORSCHE
931 602 906 00
SAAB
75 19 309
SEAT
055 905 225 B
SKODA
115 911 400
VOLVO
1336240
13362405
1336241
13362413
VW
026 905 225 1
035 905 225 B
055 905 225 B

[212] **Resistance Rotor [Ohm] 1000**
- Rotore resistenza [Ohm] 1000
- Résitance roteur [ohm] 1000
- Widerstand-Rotor [Ohm] 1000
- Resistencia rotor [ohm] 1000

ALFA ROMEO		
75 1.6	AR06100	05/85 ⇨ 09/89
75 1.8	AR06168	09/88 ⇨ 02/92
SPIDER I 1600	AR00526, AR01563	03/76 ⇨ 12/93
SPIDER I 2000	AR01544	08/86 ⇨ 12/90
AUDI		
80 II 1.3	EP	09/78 ⇨ 07/86
80 II 1.6	DT, JU, SA, WV	08/78 ⇨ 03/87
80 II 1.8	DS, JN, SF	01/83 ⇨ 08/86
80 II 1.8 CC quattro	JN, JV	08/84 ⇨ 08/86
80 II 1.8 GTE	DZ, MU	06/84 ⇨ 03/87
80 II 2.0	HP, JS	10/83 ⇨ 09/84
80 II 2.0 quattro	JS	10/83 ⇨ 09/84
80 III 1.4	SE	08/86 ⇨ 07/88
80 III 1.6	ABB, PP, RN, RNA	09/86 ⇨ 10/91
80 III 1.8	RU	10/86 ⇨ 01/90
80 III 1.8 E	DZ	06/86 ⇨ 08/91
80 III 1.8 S	JN, JV, NE, PM, SF	08/86 ⇨ 10/91
80 III 1.8 S quattro	JN	09/86 ⇨ 09/91
80 IV 1.6	ABB	03/92 ⇨ 05/93
90 I 1.8	JN	06/84 ⇨ 03/87
90 I 2.0	HP, JL, JS	10/84 ⇨ 03/87
90 I 2.0 quattro	JS	08/84 ⇨ 08/86
90 I 2.2	KX	01/85 ⇨ 03/87
90 II 2.0	PS	07/88 ⇨ 09/91
90 II 2.2 E	9C54	04/87 ⇨ 07/91
90 II 2.2 E quattro	9C54	04/87 ⇨ 09/91
100 III 1.8	DR, DS, JW, NP, SH	08/82 ⇨ 12/90
100 III 1.8 Cat	4B, PH	03/85 ⇨ 11/90
100 III 1.8 Cat quattro	4B	08/85 ⇨ 11/90
100 III 1.8 quattro	NP, SH	10/84 ⇨ 07/90
100 III 2.0	KP	08/84 ⇨ 12/87
100 III 2.0 Cat	RT	01/88 ⇨ 11/90
100 III 2.0 E	KP	01/85 ⇨ 12/87
100 III 2.0 E Cat	RT	01/88 ⇨ 11/90
100 III 2.2 Cat	KU	06/89 ⇨ 11/90
100 III 2.2 Cat quattro	KU	06/89 ⇨ 11/90
100 IV 1.6	ABB	03/92 ⇨ 07/93
200 II 2.2 Turbo quattro	MC	01/85 ⇨ 12/91
COUPE 1.8	DZ	08/89 ⇨ 07/91
COUPE 2.2	9C54	11/88 ⇨ 07/91
COUPE 2.2 GT	9C54	09/84 ⇨ 10/88
COUPE 2.2 quattro	9C54, JT	10/84 ⇨ 07/91

BMW		
3 II 316 i	M10B18(184KA)	08/87 ⇨ 08/88
3 II 318 i	M10B18(184EA), M10B18(184KA)	09/82 ⇨ 08/88
5 II 518 i	M10B18(184EB)	05/81 ⇨ 12/87
MERCEDES-BENZ		
124 200 CE	M102.963	09/89 ⇨ 06/93
124 230 CE	M102.982	03/87 ⇨ 12/92
124 230 CE Cat	M102.982	06/89 ⇨ 12/92
190 2.0	M102.921, M102.924	10/82 ⇨ 05/90
190 2.3	M102.985	09/87 ⇨ 09/88
190 2.3 E	M102.985	10/82 ⇨ 09/88
190 E 2.0	M102.962	10/82 ⇨ 08/93
190 E 2.3	M102.985	09/86 ⇨ 08/93
CLASSE G I 200 GE	M102.964	02/80 ⇨ 08/92
CLASSE G I 230 GE	M102.981, M102.987	04/82 ⇨ 08/92
CLASSE G II 230 G	M102.958	04/92 ⇨
CLASSE G II 230 GE	M102.981, M102.996, M102.997	04/92 ⇨
KOMBI I 200 T	M102.920, M102.939	11/80 ⇨ 11/85
KOMBI II 200 T	M102.922	09/85 ⇨ 05/90
KOMBI II 200 TE	M102.962, M102.963	09/88 ⇨ 08/92
KOMBI II 230 E Chassis	M102.982	09/86 ⇨ 06/93
KOMBI II 230 TE	M102.982	09/85 ⇨ 08/92
KOMBI II 230 TE Cat	M102.982	06/89 ⇨ 08/92
O 309	M102.943	01/68 ⇨ 02/89
T1 210 2.3	M102.942, M102.945	04/77 ⇨ 02/96
T1 310 2.3	M102.942, M102.945	08/82 ⇨ 02/96
T1 410 2.3	M102.942, M102.945	08/82 ⇨ 06/95
T2/LN1 510	M102.946	04/86 ⇨ 12/94
TRE VOLUMI II 200	M102.922	12/85 ⇨ 10/92
TRE VOLUMI II 200 E	M102.963	09/88 ⇨ 08/93
TRE VOLUMI II 230 E	M102.982	12/84 ⇨ 06/93
TRE VOLUMI II 230 E Cat	M102.982	06/89 ⇨ 06/93
OPEL		
MANTA B 1.3 S	13S	08/81 ⇨ 08/86
PEUGEOT		
505 2.0	106E(XN1A)	09/85 ⇨ 09/95
505 2.1 i	XN9T	01/83 ⇨ 12/88
505 2.2	851(ZDJ), 851X(ZDJL)	05/81 ⇨ 12/93
505 2.2 GTI	851B(ZDJL)	08/83 ⇨ 12/93
PUCH		
G-MODELL 230 GE	M102.981, M102.987, M102.996	03/79 ⇨ 07/00
SAAB		
9000 2.0 -16 Turbo	B202XL	09/84 ⇨ 08/93
9000 2.0 -16 Turbo CD	B202XL	09/88 ⇨ 08/93
SEAT		
TOLEDO I 1.6 i	1F, ABN, EZ	05/91 ⇨ 03/99
TOLEDO I 1.8 i	RP	05/91 ⇨ 12/96
SKODA		
FELICIA 1.3	061GW4G15K	10/94 ⇨ 07/96
VOLKSWAGEN (BR)		
GOL 1.6	504, 505	09/94 ⇨ 01/97
GOL 1.8	521, 522	04/94 ⇨ 01/97
GOL 2.0i	528, 529	09/94 ⇨ 01/97
LOGUS 1.6	504, 505	10/94 ⇨ 12/96
LOGUS 1.8	524, 525, 599	12/92 ⇨ 12/96
LOGUS 2.0	653	11/93 ⇨ 05/94
LOGUS 2.0i	526, 527	05/94 ⇨ 12/96
PARATI 1.6	504, 505	08/95 ⇨ 01/97
PARATI 1.8	521	08/95 ⇨ 01/97
PARATI 2.0i	528, 529	08/95 ⇨ 01/97
POINTER 1.8	524, 525, 599	11/93 ⇨ 12/96
POINTER 2.0	653	12/92 ⇨ 05/94
POINTER 2.0i	526, 527	05/94 ⇨ 12/96
VOLVO		
240 2.3	B230F	08/86 ⇨ 07/87
240 2.3 i Cat	B230F	08/86 ⇨ 07/93
760 2.3 Turbo	B23ET, B23FT	08/82 ⇨ 07/84
VW		
PASSAT II 1.6	DT	08/80 ⇨ 03/88
PASSAT II 1.8	DS	01/83 ⇨ 03/88
PASSAT II 1.8 Syncro	DS	01/86 ⇨ 03/88
PASSAT II 2.0	JS	08/83 ⇨ 03/88
PASSAT II 2.0 Syncro	JS	05/84 ⇨ 03/88
PASSAT II 2.2	KX	01/85 ⇨ 03/88
JETTA II 1.6	ABN, EZ, EZA, HM, PN, RF	12/83 ⇨ 07/92
JETTA II 1.8	EV, GU, GX, RH	01/84 ⇨ 10/91
JETTA II 1.8 Cat	GX, RP	08/87 ⇨ 10/91
JETTA II 1.8 Syncro	GU, RP	08/87 ⇨ 12/88
JETTA II 1.8i GT	GZ	12/83 ⇨ 07/88
CADDY I 1.5	JB	08/82 ⇨ 07/83
CADDY I 1.6	EW, HN	01/83 ⇨ 07/92
CADDY I 1.8	JH	08/85 ⇨ 07/92
GOLF I 1.6	EW, HN	08/83 ⇨ 04/92
GOLF I 1.8	DX, EX, JH, KT	08/82 ⇨ 04/93
GOLF II 1.6	ABN, EZ, PN, RF	08/83 ⇨ 12/92
GOLF II 1.6 [CHE] [SWE]	HM	08/83 ⇨ 07/88
GOLF II 1.6 G	EZA, PN	08/86 ⇨ 07/91

VW		
GOLF II 1.8	GU, GX, RH	08/84 ⇨ 10/91
GOLF II 1.8 [CHE] [SWE]	HV	08/86 ⇨ 07/87
GOLF II 1.8 GTI	EV	08/83 ⇨ 10/91
GOLF II 1.8 i	RP	08/87 ⇨ 07/91
GOLF II 1.8 i Cat	GX, RP	08/87 ⇨ 10/91
GOLF II 1.8 i Cat Syncro	RP	08/87 ⇨ 10/91
GOLF II 1.8 Syncro	GU, GX	02/86 ⇨ 07/91
GOLF II 1.8i GTI [CHE] [SWE]	GZ	08/85 ⇨ 07/87
GOLF II 1.8i GTI [SWE]	GZ	08/87 ⇨ 07/88
PASSAT III 1.6	1F, ABN, EZ	04/88 ⇨ 07/92
PASSAT III 1.8	RP	02/88 ⇨ 05/97
QUANTUM 1.7	--	01/85 ⇨ 12/87
QUANTUM 2.1	--	01/81 ⇨ 12/89
SANTANA 1.6	DT	08/81 ⇨ 12/84
SANTANA 1.8	DS	01/83 ⇨ 12/84
SCIROCCO I 1.5	JB	08/77 ⇨ 07/80
SCIROCCO II 1.6	EW, EWA, HN, RE	01/83 ⇨ 07/90
SCIROCCO II 1.8	DX, EX, JH, KT	08/82 ⇨ 07/92
TRANSPORTER IV 1.8	5K7M710	12/90 ⇨ 07/92
ZASTAVA		
YUGO 45 [USA]	--	01/86 ⇨

FACET 3.7556RS

1

ROTORS

Adatt./Suitable: ***BOSCH***

BOSCH
1 234 332 273

CITROËN
95 602 185

GENERAL MOTORS
90 006 547
90 141 911

HOLDEN
GB838

OPEL
12 12 217
12 12 220

PEUGEOT
5937 25

SEAT
000 398 066 6
036 905 225 H
SE 021914.004A

VW
036 905 225 H

[212] **Resistance Rotor [Ohm] 1000**
- Rotore resistenza [Ohm] 1000
- Résitance roteur [ohm] 1000
- Widerstand-Rotor [Ohm] 1000
- Resistencia rotor [ohm] 1000

CITROËN		
AX 1.3 Sport	M4A	04/87 ⇨ 12/88
AX 10	C1A	09/86 ⇨ 06/92
AX 10 E	C3A	12/86 ⇨ 12/88
AX 11	H1A, H1B, HDZ(TU1M)	09/86 ⇨ 12/97
AX 11 4x4	H1A	06/91 ⇨ 07/92
AX 11 Cat	HAZ(TU1CP)	09/88 ⇨ 12/89
AX 14	K1A(TU3), K1B, K1F, K1G, K1J, K2A, K2B, K2D, KAY(TU3CP), KDX(TU3M/Z), KDY(TU3FM), KDY(TU3M), KDZ(TU3M/Z)	09/86 ⇨ 04/97
AX 14 4x4	KD4, KDX(TU3M/Z), KDY(TU3FM), KDY(TU3M), KDZ(TU3M/Z)	06/91 ⇨ 12/96
AX 14 GT	KDZ(TU3M/Z)	01/89 ⇨ 12/91
BX 1.1	109LA, H1A	04/86 ⇨ 06/91
BX 1.4	150C, K1F, K2D	07/86 ⇨ 12/94
BX 1.4 E	150B(XY8), 150J, 150Y, K1F, KAZ	09/82 ⇨ 12/94
BX 1.6	182A, B2C, B6D, B6E	01/87 ⇨ 12/94
BX 1.9	159B, 159C, D6U, DKK	05/85 ⇨ 12/94
BX 1.9 GTi	D6D, D6K	01/87 ⇨ 01/92
BX 14	150C, KDY(TU3M), KDZ(TU3M/Z)	01/86 ⇨ 02/93
BX 14 E	150A, 150C, K1G	10/82 ⇨ 02/93
BX 15	B1E(XU51C)	01/87 ⇨ 05/92
BX 16	171A, 171B, 171C, 171D, 180Z, 23DH, B1E(XU51C), BAY(XU5CP), BAZ(XU5CP)	10/82 ⇨ 12/94
BX 19	159A, D2A(XU92C), D2C(XU92C), D2E, D6A(XU9J2), DKZ(XU9JA)	09/84 ⇨ 12/94
BX 19 Cat	DFZ(XU9J1)	07/86 ⇨ 12/94
BX 19 E 4x4	D2F	04/89 ⇨ 02/93
BX 19 GTi	D6A(XU9J2), DKZ(XU9JA)	07/86 ⇨ 02/93
BX 19 4x4	D2F	04/89 ⇨ 02/93
C15 1.0	108C, 108C(XV8), C1A, C1A(TU9/K), C1B(TU9/W), TU9	10/84 ⇨ 12/97
C15 1.0 E	TU9K	11/92 ⇨ 07/96
C15 1.1	109K, H1A, HDZ(TU1M), TU1, XW7	10/84 ⇨ 12/96
C15 1.1 i	HDZ(TU1M), TU1MZ	07/88 ⇨ 12/96
C15 1.4	150D(XY7), K1A, K1G, K1H(TU3A), KDY(TU3M)	05/87 ⇨ 12/96
C15 1.4 E	150D(XY7), K1F, K1J, K2D, K3A, KAZ	07/86 ⇨ 12/96
C15 1.4 i	KDY(TU3FM), KDY(TU3M)	05/91 ⇨ 12/96
LNA 1.1	109/5E	07/82 ⇨ 04/85
VISA 11 E	109K	09/78 ⇨ 06/88
ZX 1.1	H1A, H1B, HDZ(TU1M), TU1	03/91 ⇨ 06/97
ZX 1.4 i	KDY(TU3M)	10/93 ⇨ 10/97
HOLDEN		
CAMIRA 1.6	16JH	08/82 ⇨ 02/86
CAMIRA 1.8 MPFi	6TZ204XS85K01	11/84 ⇨ 01/86
CAMIRA 1.8 SPFi	6TZ204XS85K01	02/86 ⇨ 03/87
OPEL		
ASCONA C 1.6	16N	09/81 ⇨ 08/88
ASCONA C 1.6 S	16SH	09/81 ⇨ 08/86
ASCONA C 1.8 E	C18NE	01/85 ⇨ 08/86
ASCONA C 1.8 i	18E	09/82 ⇨ 08/86
ASTRA F 1.4	14NV	09/91 ⇨ 09/93
CORSA A 1.4 S	14NV	09/89 ⇨ 03/93
CORSA A 1.6 GSI	E16SE	05/88 ⇨ 03/92
KADETT E 1.4 S	14NV	07/89 ⇨ 02/93
KADETT E 1.6 S	16S	09/84 ⇨ 08/86
KADETT E 1.8 E	C18NE	10/85 ⇨ 08/86
KADETT E 1.8 GSI	18E	09/84 ⇨ 08/86
KADETT E 1.8 i	18E, C18NE, C18NT	08/84 ⇨ 09/92
OMEGA A 2.6 i	C26NE	09/90 ⇨ 03/94
OMEGA A 3.0	30NE, C30LE, C30NE	03/87 ⇨ 03/94
OMEGA A 3.0 24V	C30SE	09/89 ⇨ 03/94
OMEGA A 3.0 24V Omega 3000	C30SE	09/88 ⇨ 04/94
OMEGA A 3.0 Cat	C30NE	03/87 ⇨ 03/94
SENATOR B 2.5 i	25NE	09/90 ⇨ 09/93
SENATOR B 3.0	30NE, C30LE	09/87 ⇨ 09/93
SENATOR B 3.0 24V	C30SE	09/89 ⇨ 09/93
SENATOR B 3.0 i Cat	C30NE	01/88 ⇨ 09/93
VECTRA A 1.4 S	14NV	04/88 ⇨ 06/92
PEUGEOT		
104 1.0	108C(XV8)	09/83 ⇨ 06/88
106 I 1.0	TU9	09/91 ⇨ 03/01
106 I 1.1	H1B(TU1)	08/91 ⇨ 03/96
106 I 1.4	KDY(TU3M)	09/91 ⇨ 04/96
205 I 1.0	108C(XV8)	02/83 ⇨ 12/90
205 I 1.4	150B(XY8), 150G(XY7), 150H(XY8), TU3	01/83 ⇨ 12/90
205 I 1.6	B1A(XU51C), B1E(XU51C), BAZ(XU5CP)	08/86 ⇨ 10/87
205 I 1.6 GTI	180A(XU5J), B6D(XU5JA), XU5J1	01/83 ⇨ 12/90
205 I 1.9 GTI	D6B(XU9JA), DFZ(XU9J1)	10/86 ⇨ 10/87
205 II 1.0	TU9	10/87 ⇨ 09/98
205 II 1.1	H1B(TU1)	10/87 ⇨ 12/94
205 II 1.1 CJ	HDZ(TU1M)	10/89 ⇨ 12/94
205 II 1.4	150B(XY8), 150G(XY7), 150H(XY8), K1D(TU3A), K2B(TU3S)	06/87 ⇨ 10/90
205 II 1.4 Cat	KAY(TU3CP)	08/87 ⇨ 09/93
205 II 1.4 CJ	150G(XY7), K1D(TU3A)	03/88 ⇨ 12/94
205 II 1.4 CJ Cat	KAY(TU3CP)	01/89 ⇨ 09/93
205 II 1.4 CT	150B(XY8), 150H(XY8)	04/86 ⇨ 12/88
205 II 1.6	B1A(XU51C), B1E(XU51C), BAZ(XU5CP)	10/87 ⇨ 09/98
205 II 1.6 CTI	180A(XU5J), 180Z(XU5J)	03/86 ⇨ 10/90
205 II 1.6 GTI	180A(XU5J), 180Z(XU5J), XU5JA	10/87 ⇨ 12/94
205 II 1.9 CTI	DFZ(XU9J1)	10/87 ⇨ 12/94
205 II 1.9 GTI	D6B(XU9JA)	10/87 ⇨ 09/98
205 II 1.9 GTI Cat	DFZ(XU9J1)	10/87 ⇨ 07/94
309 I 1.4	K1D(TU3A)	03/89 ⇨ 07/89
309 I 1.6	--, 180Z(XU5J), B1A(XU51C), B1D(XU51C), B1E(XU51C), B6B(XU5J), XU5JA	10/85 ⇨ 07/89
309 I 1.6 Cat	BAZ(XU5CP)	09/86 ⇨ 12/89
309 I 1.9	D2B(XU9S), DFZ(XU9J1), XU92C	10/85 ⇨ 07/89
309 I 1.9 GTI	D6B(XU9JA)	10/86 ⇨ 07/89
309 II 1.1	H1B(TU1)	09/89 ⇨ 10/93
309 II 1.4	TU3	07/89 ⇨ 12/93
309 II 1.6	XU5JA	07/89 ⇨ 12/93
309 II 1.6 GTi	--	09/89 ⇨ 10/93
309 II 1.9	XU92C	07/89 ⇨ 12/93
405 I 1.4	K5A(TU3), TU3A	01/87 ⇨ 12/92
405 I 1.6	--	01/87 ⇨ 12/92
405 I 1.9	D6A(XU9J2), DFZ(XU9J1)	07/87 ⇨ 12/93
PEUGEOT		
405 I 1.9 Antipollution	XU92C	01/87 ⇨ 12/92
405 I 1.9 Injection	DFZ(XU9J1)	07/87 ⇨ 12/92
405 I 1.9 Trazione integrale	DFZ(XU9J1)	09/88 ⇨ 07/92
405 II 1.6	18EM	08/92 ⇨ 05/97
505 2.0 TI, STI	829(ZEJ)	08/79 ⇨ 10/86
SEAT		
IBIZA I 1.2	021A1000	11/84 ⇨ 12/93
IBIZA II 1.3 i	8C20HD0D	03/93 ⇨ 08/99
MALAGA 1.2	021A1000	05/85 ⇨ 12/93
MALAGA 1.5	021A2000	05/85 ⇨ 12/93
VAUXHALL		
ASTRA III 1.4	14NV	09/91 ⇨ 09/93
ASTRA III 1.4 S	14NV	09/91 ⇨ 02/98
VW		
POLO II 1.0	AAK, GL, HZ	10/81 ⇨ 09/94
POLO II 1.0 Cat	AAK, ACM	08/89 ⇨ 09/94
POLO II 1.3	GK, MH	09/82 ⇨ 09/89
POLO II 1.3 Cat	2G, MH, NZ	07/87 ⇨ 09/94
JETTA II 1.0	HZ	08/85 ⇨ 10/91
JETTA II 1.3	GT, MH, NU	01/84 ⇨ 12/87
JETTA II 1.3 Cat	2G, MH, NZ	06/87 ⇨ 12/91
DERBY 1.3	HK	08/83 ⇨ 12/84
GOLF II 1.0	HZ	08/85 ⇨ 10/91
GOLF II 1.3	GT, MH, NU	08/83 ⇨ 12/87
GOLF II 1.3 Cat	2G, NZ	06/86 ⇨ 12/92
PASSAT II 1.3	79SU16	08/80 ⇨ 07/86
SCIROCCO II 1.3	GF	08/80 ⇨ 12/83

FACET 3.7559RS

3

ROTORS

Adatt./Suitable: ***BOSCH***

AUDI
035 905 225 C

BOSCH
1 234 332 305
1 234 335 305

VW
035 905 225 C

[03] **Supplied until depletion**
- Fornibile fino ad esaurimento delle scorte
- Fourni jusqu'à épuisement du stock
- Lieferbar solange vorrat reicht
- Suministrado hasta el stock termina

[212] **Resistance Rotor [Ohm] 1000**
- Rotore resistenza [Ohm] 1000
- Résitance roteur [ohm] 1000
- Widerstand-Rotor [Ohm] 1000
- Resistencia rotor [ohm] 1000

[310] **RPM to [1/min] 6700**
- N° giri fino a [1/min.] 6700
- Régime mot. jusqu'à [1/min] 6700
- Drehzahl bis [1/min] 6700
- vel. giro hasta [1/min] 6700

AUDI		
100 III 1.9	WH	08/82 ⇨ 07/84
100 III 2.2	KZ	10/84 ⇨ 09/86
200 II 2.2	KU	08/84 ⇨ 07/85
200 II 2.2 Turbo quattro	MC	01/85 ⇨ 12/91
VW		
PASSAT II 1.9	WN	01/81 ⇨ 07/83

FACET 3.7560RS

1

ROTORS

Adatt./Suitable: ***BOSCH***

BMW
12 11 1 707 263
BOSCH
1 234 332 279
1 234 332 296
DAF
698595
FORD
6 075 742
81SF-12200-FA
MAN
51.26310-0005
MERCEDES-BENZ
A 000 158 35 31
Motorcraft
EDR 98
ROVER
GRA2236
GRA2264

[212] Resistance Rotor [Ohm] 1000
- Rotore resistenza [Ohm] 1000
- Résitance roteur [ohm] 1000
- Widerstand-Rotor [Ohm] 1000
- Resistencia rotor [ohm] 1000

BMW		
3 II 323 i	M20B23(236EC)	09/82 ⇨ 09/86
5 II 520 i	M20B20(206EA)	06/81 ⇨ 12/87
5 II 525 i	M30B25(256EA)	06/81 ⇨ 12/87
5 II 528 i	M30B28(286EA)	06/81 ⇨ 12/87
FORD		
ESCORT III 1.3	JPA	09/80 ⇨ 02/86
ESCORT III 1.6	LP1, LPA	09/80 ⇨ 12/85
ORION I 1.3	JPA	07/83 ⇨ 03/86
ORION I 1.6	LP1, LPA	07/83 ⇨ 03/86
MERCEDES-BENZ		
123 280 CE	M110.988	03/77 ⇨ 11/85
CLASSE G I 280 GE	M110.994	11/79 ⇨ 08/89
CLASSE G II 280 GE	M110.994	04/92 ⇨
CLASSE S II 280 SE, SEL	M110.989	10/79 ⇨ 07/85
TRE VOLUMI I 280 E	M110.988	02/76 ⇨ 11/85
PUCH		
G-MODELL 280 GE	M110.994	01/86 ⇨ 12/91

FACET 3.7561RS

1

ROTORS

Adatt./Suitable: ***BOSCH***

ALFA ROMEO
116 97 05 011 00/04
60755007
9940437
BMW
12 11 1 272 300
BOSCH
1 234 332 271
1 234 332 275
1 234 332 401
FIAT
7080449
9940437
FORD
5 021 112
6 124 108
6 182 579
80SX-12200-AA
84SF-12200-AA
88SX-12200-AA
89SF-12200-AA
GENERAL MOTORS
91 103 092
MERCEDES-BENZ
0001582731
A 000 158 33 31
Motorcraft
EDR 151
EDR 157
EDR 187
OPEL
12 12 219
PEUGEOT
5937 40
TALBOT
0043 23 7300
VW
039 905 225
053 905 225 1

[212] Resistance Rotor [Ohm] 1000
- Rotore resistenza [Ohm] 1000
- Résitance roteur [ohm] 1000
- Widerstand-Rotor [Ohm] 1000
- Resistencia rotor [ohm] 1000

ALFA ROMEO		
33 I 1.2	AR30585	06/83 ⇨ 12/89
33 I 1.3	AR30168, AR30586, AR30587	06/83 ⇨ 12/89
33 I 1.3 i.e.	AR30168	05/83 ⇨ 12/89
33 I 1.4	AR30587	01/84 ⇨ 12/88
33 I 1.5	AR30588	07/86 ⇨ 12/89
33 I 1.5 4x4	AR30508, AR30588	07/86 ⇨ 12/89
33 I 1.5 QV	AR30146, AR30508, AR30588	06/84 ⇨ 12/89
33 I 1.7	AR30550	01/86 ⇨ 06/90
33 I 1.7 i.e.	AR30558	09/88 ⇨ 12/89
33 I 1.7 i.e. 4x4	AR30558	09/88 ⇨ 12/89
33 I 1.7 QV	AR30550	03/88 ⇨ 12/89
33 II 1.2	AR30743	01/90 ⇨ 08/91
33 II 1.3	AR30732	09/91 ⇨ 10/94
33 II 1.5	AR30734	01/90 ⇨ 04/93
75 1.8	AR06202	09/85 ⇨ 06/89
90 1.8	AR06202	10/84 ⇨ 07/87
90 2.0 i.e.	AR06210	10/84 ⇨ 07/87
ALFETTA 1.6	AR01600	01/75 ⇨ 12/84
ALFETTA 1.8	AR01608	10/79 ⇨ 12/84
GIULIETTA I 1.6	AR01600	10/77 ⇨ 04/85
GIULIETTA I 1.8	AR01678	04/79 ⇨ 04/85
GIULIETTA I 2.0	AR01655	06/80 ⇨ 04/85
CITROËN		
C15 1.1	E1A	10/84 ⇨ 12/96
C15 1.3	G1A	07/87 ⇨ 05/88
FIAT		
UNO 70 1.3i SX	--	01/83 ⇨ 12/89
UNO 75 i.e. 1.5	138C2.048	10/85 ⇨ 12/93
FIAT (BR)		
PREMIO	--	01/85 ⇨ 12/88
PREMIO 1.3	--	01/85 ⇨
PREMIO 1.5	--	01/85 ⇨
UNO 1.3	1.3	01/85 ⇨ 12/91
UNO 1.5	1.5	01/91 ⇨ 12/93
UNO 1.5R	1.5	01/87 ⇨ 12/89
UNO 1.6R	1.6	01/90 ⇨ 12/93
UNO CS 1.3	1.3	01/85 ⇨ 12/91
UNO CS 1.5	1.5	01/89 ⇨ 12/93
UNO CS 1.5 Furgoneta	1.5	01/91 ⇨ 12/93
UNO CSL 1.6	1.6	01/91 ⇨ 12/93
UNO MILLE 1.0	1.0	01/91 ⇨ 04/93

FORD		
ESCORT IV 1.4	F6D, FUA, FUC	01/86 ⇨ 07/90
FIESTA II 1.1	GSH	05/86 ⇨ 02/89
FIESTA II 1.4	FUB, FUD	10/85 ⇨ 11/89
ESCORT III 1.4 i	F6D, FUC	02/86 ⇨ 07/90
ORION I 1.3	JPA	11/86 ⇨ 07/88
ORION I 1.4	FUA, FUC	12/85 ⇨ 07/90
ORION I 1.4 Cat	F6D	02/87 ⇨ 07/90
OPEL		
CORSA A 1.2	E12GV	09/82 ⇨ 08/90
CORSA A 1.2 N	E12GV	01/85 ⇨ 10/87
PEUGEOT		
205 I 1.3	G1A	02/84 ⇨ 10/87
205 I 1.4	J2	01/83 ⇨ 12/90
205 II 1.1 XA	E1	07/87 ⇨ 10/88
205 II 1.2	F1	01/87 ⇨ 12/90
205 II 1.3	G1A	08/90 ⇨ 07/92
205 II 1.4	J2	01/91 ⇨ 12/94
309 I 1.1	E1	10/85 ⇨ 07/89
309 I 1.3	G1A, G2S	10/85 ⇨ 08/89
309 I 1.6	--, J2	01/86 ⇨ 07/89
309 II 1.6	18EM, J2	07/89 ⇨ 12/93
TALBOT		
TAGORA 2.1	5N2	06/80 ⇨ 12/83
VOLKSWAGEN (BR)		
APOLLO 1.8	424, 599	06/90 ⇨ 11/92

FACET 3.7567RS

3

ROTORS

Adatt./Suitable: ***BOSCH***

BOSCH
1 234 332 144
1 234 332 158
1 234 332 162
1 234 332 209
1 234 332 291
1 234 332 303
GENERAL MOTORS
93 150 099
VW
021 905 225
071 905 225
071 905 225 A

[03] Supplied until depletion
- Fornibile fino ad esaurimento delle scorte
- Fourni jusqu'à épuisement du stock
- Lieferbar solange vorrat reicht
- Suministrado hasta el stock termina

[212] Resistance Rotor [Ohm] 1000
- Rotore resistenza [Ohm] 1000
- Résitance roteur [ohm] 1000
- Widerstand-Rotor [Ohm] 1000
- Resistencia rotor [ohm] 1000

[310] RPM to [1/min] 5400
- N° giri fino a [1/min.] 5400
- Régime mot. jusqu'à [1/min] 5400
- Drehzahl bis [1/min] 5400
- vel. giro hasta [1/min] 5400

OPEL		
REKORD E 1.7	17N	09/77 ⇨ 10/82
REKORD E 1.9	19N	09/77 ⇨ 10/82
REKORD E 2.0	20N	09/77 ⇨ 10/82
VOLVO		
240 2.3	B23A	08/80 ⇨ 07/84
VW		
TRANSPORTER II 2.0	CJ, GD, GE	08/75 ⇨ 04/79
TRANSPORTER III 1.9	DF, DG	08/82 ⇨ 07/92
TRANSPORTER III 1.9 Syncro	DG	11/84 ⇨ 07/92

FACET 3.7570RS

3

ROTORS

Adatt./Suitable: ***BOSCH***

BOSCH
1 234 332 333
PORSCHE
944 602 901 00
944 602 906 01
ROLLS-ROYCE
UE 46152

212 Resistance Rotor [Ohm] 1000
- Rotore resistenza [Ohm] 1000
- Résitance roteur [ohm] 1000
- Widerstand-Rotor [Ohm] 1000
- Resistencia rotor [ohm] 1000

PORSCHE		
924 2.5 S	M44.07	09/85 ⇨ 07/87
928 4.7 S	M28.11, M28.12	09/79 ⇨ 07/83

FACET 3.7573/12RS

3

ROTORS

Adatt./Suitable: ***BOSCH***

BMW
12 11 1 276 277
12 11 1 286 111
BOSCH
1 234 332 276
1 234 332 313
1 234 332 344
1 234 332 351
FORD
1 612 099
1 617 277
V83S-F12200-AA
V83S-F12200-AB
MERCEDES-BENZ
A 000 158 37 31
Motorcraft
EDR 123
EDR 135

03 Supplied until depletion
- Fornibile fino ad esaurimento delle scorte
- Fourni jusqu'à épuisement du stock
- Lieferbar solange vorrat reicht
- Suministrado hasta el stock termina

212 Resistance Rotor [Ohm] 1000
- Rotore resistenza [Ohm] 1000
- Résitance roteur [ohm] 1000
- Widerstand-Rotor [Ohm] 1000
- Resistencia rotor [ohm] 1000

310 RPM to [1/min] 6500
- N° giri fino a [1/min.] 6500
- Régime mot. jusqu'à [1/min] 6500
- Drehzahl bis [1/min] 6500
- vel. giro hasta [1/min] 6500

BMW		
3 II 323 i	M20B23(236EC)	09/82 ⇨ 09/86
5 II 520 i	M20B20(206EA)	06/81 ⇨ 12/87
5 II 525 i	M30B25(256EA)	06/81 ⇨ 12/87
5 II 528 i	M30B28(286EA)	06/81 ⇨ 12/87
6 I 628 CSi	M30B28	09/79 ⇨ 08/87
FORD		
ESCORT III 1.6 i	LR1	09/83 ⇨ 12/85
ESCORT III 1.6 XR3i	LR1, LRA	10/82 ⇨ 12/85
ORION I 1.6 i	LR1, LRA	07/83 ⇨ 03/86

FACET 3.7573/13RS

1

ROTORS

Adatt./Suitable: ***BOSCH***

ALFA ROMEO
116 69 05 011 00/02
60732287
BOSCH
1 234 332 200
1 234 332 346
JAGUAR
JLM 839
MERCEDES-BENZ
0001583531
PORSCHE
930 602 902 01
930 602 902 02

00 Eliminated on 09-03-2022. Please verify the availability through our local distributors
- Eliminato il 09-03-2022. Verificare la disponibilità presso i nostri distributori
- Eliminé le 09-03-2022. Verifier la disponibilité auprès de nos distributeurs sur place
- Am 09-03-2022 gestrichen. Evtl. Verfügbarkeit bitte bei unseren Händlern prüfen
- Eliminado en fecha 09-03-2022. Verificar la disponibilidad a través de nuestros distribuidores locales

212 Resistance Rotor [Ohm] 1000
- Rotore resistenza [Ohm] 1000
- Résitance roteur [ohm] 1000
- Widerstand-Rotor [Ohm] 1000
- Resistencia rotor [ohm] 1000

ALFA ROMEO		
75 2.5 V6	AR01911	05/85 ⇨ 08/86
75 3.0 V6	AR06120, AR61503	01/87 ⇨ 02/92
75 3.0 V6 Cat	AR06124	01/87 ⇨ 02/92
PORSCHE		
911 II 3.3 Turbo	M30.69	08/90 ⇨ 09/93
911 II 3.3 Turbo S	M30.69S	06/91 ⇨ 12/92
911 II 3.6 Carrera	M64.01, M64.02	12/88 ⇨ 05/94
911 II 3.6 Carrera 4	M64.01	12/88 ⇨ 05/94
911 II 3.6 Carrera RS	M64.03	06/91 ⇨ 09/93
911 II 3.6 Turbo	M64.50	01/93 ⇨ 09/93
911 I 3.2 SC Carrera	930.20	08/83 ⇨ 08/89
911 III 3.6 Carrera	M64.05, M64.06, M64.07, M64.08, M64.21, M64.22, M64.23, M64.24	10/93 ⇨ 09/97
911 III 3.6 Carrera 4	M64.05, M64.07, M64.21, M64.23	07/94 ⇨ 09/97
911 III 3.6 Turbo 4	M64.60	03/95 ⇨ 09/97
911 III 3.6 Turbo GT2	M64.60R	03/95 ⇨ 09/97
911 III 3.6 Turbo GT2 4	M64.60R, M64.60RS	08/95 ⇨ 09/97
911 III 3.8 Carrera	M64.05S, M64.06S, M64.21S	06/95 ⇨ 09/97
911 III 3.8 Carrera 4	M64.05S, M64.06S, M64.21S	06/95 ⇨ 09/97
911 III 3.8 Carrera RS	M64.20	06/95 ⇨ 09/97

FACET 3.7573/14RS

3

ROTORS

Adatt./Suitable: ***BOSCH***

BOSCH
1 234 332 340
VW
052 905 225 B

03 Supplied until depletion
- Fornibile fino ad esaurimento delle scorte
- Fourni jusqu'à épuisement du stock
- Lieferbar solange vorrat reicht
- Suministrado hasta el stock termina

212 Resistance Rotor [Ohm] 5000
- Rotore resistenza [Ohm] 5000
- Résitance roteur [ohm] 5000
- Widerstand-Rotor [Ohm] 5000
- Resistencia rotor [ohm] 5000

310 RPM to [1/min] 6500
- N° giri fino a [1/min.] 6500
- Régime mot. jusqu'à [1/min] 6500
- Drehzahl bis [1/min] 6500
- vel. giro hasta [1/min] 6500

VW		
POLO II 1.0	GL	10/81 ⇨ 10/86
POLO II 1.3	HK, HW	08/83 ⇨ 07/88
JETTA II 1.3	HK	01/84 ⇨ 06/87
DERBY 1.0	GL	10/81 ⇨ 12/84
DERBY 1.3	HH	02/77 ⇨ 09/81
GOLF I 1.3	HK	08/83 ⇨ 07/86
GOLF II 1.0	GN	11/83 ⇨ 08/85
GOLF II 1.3	HK	08/83 ⇨ 06/87
SCIROCCO I 1.3	GF	08/79 ⇨ 07/80
SCIROCCO II 1.3	HK	08/83 ⇨ 07/84

FACET 3.7573/15RS

3

ROTORS

Adatt./Suitable: ***BOSCH***

BMW
12 11 1 286 110
12 11 1 357 720
12 11 1 710 735
BOSCH
1 234 332 220
1 234 332 281
1 234 332 288
1 234 332 343
FIAT
82357741
VW
049 905 225 C
049 905 225 D

03 Supplied until depletion
- Fornibile fino ad esaurimento delle scorte
- Fourni jusqu'à épuisement du stock
- Lieferbar solange vorrat reicht
- Suministrado hasta el stock termina

212 Resistance Rotor [Ohm] 1000
- Rotore resistenza [Ohm] 1000
- Résitance roteur [ohm] 1000
- Widerstand-Rotor [Ohm] 1000
- Resistencia rotor [ohm] 1000

310 RPM to [1/min] 6400
- N° giri fino a [1/min.] 6400
- Régime mot. jusqu'à [1/min] 6400
- Drehzahl bis [1/min] 6400
- vel. giro hasta [1/min] 6400

BMW		
3 II 316	M10B18(184VC), M10B18(184VD)	09/83 ⇨ 06/88
3 II 318 i	M10B18(184EA), M10B18(184KA)	09/82 ⇨ 08/88
3 I 315	M10B16(164VB)	03/81 ⇨ 03/84
5 II 518	M10B18(184VC), M10B18(184VD)	06/81 ⇨ 09/84
5 II 518 i	M10B18(184EB)	05/81 ⇨ 12/87

BMW		
5 I 518	M10B18(184VB)	07/74 ⇨ 05/81

FACET 3.7573/16RS — 3

ROTORS

Adatt./Suitable: ***BOSCH***

AUDI
026 905 225
035 905 225
BOSCH
1 234 332 242
1 234 332 348
GENERAL MOTORS
93 150 911
VW
026 905 225
035 905 225

[03] **Supplied until depletion**
- Fornibile fino ad esaurimento delle scorte
- Fourni jusqu'à épuisement du stock
- Lieferbar solange vorrat reicht
- Suministrado hasta el stock termina

[212] **Resistance Rotor [Ohm] 1000**
- Rotore resistenza [Ohm] 1000
- Résitance roteur [ohm] 1000
- Widerstand-Rotor [Ohm] 1000
- Resistencia rotor [ohm] 1000

[310] **RPM to [1/min] 6700**
- N° giri fino a [1/min.] 6700
- Régime mot. jusqu'à [1/min] 6700
- Drehzahl bis [1/min] 6700
- vel. giro hasta [1/min] 6700

AUDI		
80 II 1.8 GTE	DZ	10/84 ⇨ 08/86
80 II 2.0	HP, JS	10/83 ⇨ 09/84
80 II 2.0 quattro	JS	10/83 ⇨ 09/84
90 I 2.0	HP, JS	10/84 ⇨ 03/87
90 I 2.0 quattro	JS	08/84 ⇨ 08/86
90 I 2.2	9C54, HY	10/84 ⇨ 03/87
90 I 2.2 E quattro	9C54	11/84 ⇨ 03/87
100 III 2.0	KP	08/84 ⇨ 12/87
100 III 2.0 E	KP	01/85 ⇨ 12/87
100 III 2.2	KZ	10/84 ⇨ 09/86
COUPE 2.2 GT	9C54	09/84 ⇨ 10/88
COUPE 2.2 quattro	9C54	10/84 ⇨ 07/91
VW		
PASSAT II 2.0	JS	08/83 ⇨ 03/88
PASSAT II 2.0 Syncro	JS	05/84 ⇨ 03/88
JETTA II 1.8	EV	01/84 ⇨ 10/91
JETTA II 1.8i GT	GZ	12/83 ⇨ 07/88
GOLF I 1.8	DX, KT	08/82 ⇨ 12/92
GOLF II 1.8 GTI	EV	08/83 ⇨ 10/91
GOLF II 1.8i GTI [CHE] [SWE]	GZ	01/84 ⇨ 07/85
SANTANA 1.9	WN	08/81 ⇨ 07/83
SANTANA 2.0	JS	08/83 ⇨ 12/84
SCIROCCO II 1.8	DX, KT	08/82 ⇨ 12/89

FACET 3.7573/17RS — 3

ROTORS

Adatt./Suitable: ***BOSCH***

BMW
12 11 1 304 909
12 11 1 328 430
BOSCH
1 234 332 272
1 234 332 277
1 234 332 284
1 234 332 317
1 234 332 353
VW
073 905 225 A

[00] **Eliminated on 07-07-2021. Please verify the availability through our local distributors**
- Eliminato il 07-07-2021. Verificare la disponibilità presso i nostri distributori
- Eliminé le 07-07-2021. Verifier la disponibilité auprès de nos distributeurs sur place
- Am 07-07-2021 gestrichen. Evtl. Verfügbarkeit bitte bei unseren Händlern prüfen
- Eliminado en fecha 07-07-2021. Verificar la disponibilidad a través de nuestros distribuidores locales

[212] **Resistance Rotor [Ohm] 5000**
- Rotore resistenza [Ohm] 5000
- Résitance roteur [ohm] 5000
- Widerstand-Rotor [Ohm] 5000
- Resistencia rotor [ohm] 5000

[310] **RPM to [1/min] 5900**
- N° giri fino a [1/min.] 5900
- Régime mot. jusqu'à [1/min] 5900
- Drehzahl bis [1/min] 5900
- vel. giro hasta [1/min] 5900

VW		
LT I 2.4	DL	12/82 ⇨ 07/92
LT I 2.4 4WD	DL	12/82 ⇨ 07/92

FACET 3.7573/18RS — 1

ROTORS

Adatt./Suitable: ***BOSCH***

BOSCH
1 234 332 349
VOLVO
1346787
13467873

[212] **Resistance Rotor [Ohm] 1000**
- Rotore resistenza [Ohm] 1000
- Résitance roteur [ohm] 1000
- Widerstand-Rotor [Ohm] 1000
- Resistencia rotor [ohm] 1000

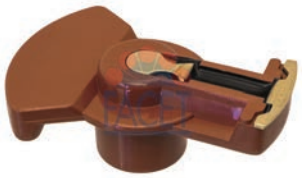

VOLVO		
960 I 2.0	B204FT	08/90 ⇨ 09/93
960 I 2.3	B230GT	08/90 ⇨ 07/94
960 I 2.3 Turbo	B230FT	09/90 ⇨ 08/93
740 2.0	B200E, B200ET, B200G, B200K	01/85 ⇨ 07/92
740 2.0 16V	B204E	09/87 ⇨ 08/90
740 2.0 16V Turbo	B204FT, B204GT	08/89 ⇨ 07/90
740 2.0 GLE	B204E	09/87 ⇨ 08/90
740 2.0 Turbo	B200ET, B200FT	09/87 ⇨ 08/91
740 2.3	B230E, B230F, B230FB, B230G, B230K, B234F	08/84 ⇨ 12/92
740 2.3 GL	B230E	08/84 ⇨ 08/87
740 2.3 Turbo	B230ET, B230FT, B230GT	08/85 ⇨ 08/91
760 2.3	B230ET, B230FT, B230K	08/84 ⇨ 07/92
760 2.3 Turbo	B230ET, B230FT, B230GT	08/84 ⇨ 08/90
780 2.0i	B204GT	01/87 ⇨ 12/90
780 2.0i Turbo	B200ET	01/87 ⇨ 12/90
940 I 2.0	B200E, B200F, B200G	08/90 ⇨ 07/94
940 I 2.0 GL	B204E	09/90 ⇨ 04/92
940 I 2.0 Turbo	B200FT	08/90 ⇨ 07/95
VOLVO		
940 I 2.3	B230E, B230F, B230FB, B230FD, B230G, B234F, B234G	08/90 ⇨ 07/95
940 I 2.3 16V	B234G	08/90 ⇨ 07/92
940 I 2.3 Turbo	B230FT, B230GT	08/90 ⇨ 07/94
940 II 2.0 GLT	B200GT	10/94 ⇨ 05/97
940 II 2.0 Turbo	B200FT	04/96 ⇨ 10/98
940 II 2.3	B230FD, B230GK	08/94 ⇨ 05/97
940 II 2.3 ti	B230FK	01/95 ⇨ 10/98
940 II 2.3 Turbo	B230FT, B230GK	08/94 ⇨ 12/98

FACET 3.7573/19RS — 3,5

ROTORS

Adatt./Suitable: ***BOSCH***

ALFA ROMEO
195 32 05 023 00/00
60513052
BMW
12 11 1 284 446
12 11 1 734 110
BOSCH
1 234 332 347
CHRYSLER
T0267693
CITROËN
5937 42
77 002 676 93
FIAT
7700267693
LANCIA
7700267693
PEUGEOT
5937 42
RENAULT
77 00 267 693
VOLVO
1269921
12699211

[03] **Supplied until depletion**
- Fornibile fino ad esaurimento delle scorte
- Fourni jusqu'à épuisement du stock
- Lieferbar solange vorrat reicht
- Suministrado hasta el stock termina

[212] **Resistance Rotor [Ohm] 1000**
- Rotore resistenza [Ohm] 1000
- Résitance roteur [ohm] 1000
- Widerstand-Rotor [Ohm] 1000
- Resistencia rotor [ohm] 1000

ALFA ROMEO		
164 2.0 Turbo	AR64102	07/90 ⇨ 10/92
164 2.0 V6 Turbo	AR64101	03/91 ⇨ 09/92
164 3.0	AR06410	11/87 ⇨ 09/91
164 3.0 i.e. QV	AR64301	09/90 ⇨ 09/92
164 3.0 Lusso [USA] [CAN]	AR06412	10/91 ⇨ 03/93
164 3.0 Sport [CAN] [USA]	AR64301	11/90 ⇨ 03/92
164 3.0 Super	64303	06/87 ⇨ 09/92
164 3.0 V6	AR06410, AR06412	06/87 ⇨ 09/92
GTV 2.0 V6 Turbo	AR16202	06/95 ⇨ 09/98
SPIDER II 2.0 V6 Turbo	AR16202	05/98 ⇨ 04/05
ALPINE		
V6 TURBO	Z7U730, Z7U732, Z7U734	01/88 ⇨ 12/90
BMW		
3 III 316 i	M40B16(164E1), M43B16(164E2)	09/90 ⇨ 09/93
3 III 318 i	M40B18(184E1)	09/90 ⇨ 08/93
3 II 316 i	M40B16(164E1)	09/87 ⇨ 06/94
3 II 318 i	M40B18(184E1)	06/87 ⇨ 06/94
3 II 320 i	M20B20(206EB), M20B20(206KA)	09/82 ⇨ 11/93
3 II 325 e 2.7	M20B27(276KA), M20B27(276KB)	10/83 ⇨ 12/88
3 II 325 i	M20B25(256E1), M20B25(256E2), M20B25(256EX), M20B25(256K1)	09/83 ⇨ 11/93
3 II 325 i X	M20B25(256E1), M20B25(256E2), M20B25(256EX), M20B25(256K1)	03/86 ⇨ 10/93
5 II 520 i	M20B20(206KA)	08/85 ⇨ 12/87
5 II 525 e	M20B27(276EA), M20B27(276EB), M20B27(276KA), M20B27(276KB)	09/81 ⇨ 12/87
5 II 528 i [USA]	--	01/81 ⇨ 12/87
5 II 530 i	--	01/84 ⇨ 12/88
5 II 535 i	M30B34(346EC)	01/85 ⇨ 12/87
5 II 535 i, M 535 i	M30B34(346KA), M30B35(Motronic)	01/85 ⇨ 12/87
5 II M5	S38B35(356ED)	08/85 ⇨ 12/87
5 III 518 i	M40B18(184E1)	09/89 ⇨ 04/94
5 III 520 i	M20B20(206KA)	06/87 ⇨ 09/90
5 III 525 i	M20B25(256K1)	02/88 ⇨ 08/90
5 III 530 i	M30B30(306KA)	01/88 ⇨ 04/90

BMW		
5 III 535 i	M30B34(346KB)	11/87 ⇨ 02/93
5 III M5	S38B36(366S1)	09/88 ⇨ 03/92
5 III M5 Cat	S38B36(366S1)	09/88 ⇨ 03/92
6 I 635 CSi	M30B35(Motronic, 9.3:1)	06/78 ⇨ 04/82
6 I M 635 CSi	M88B35(356ED), S38B35(356ED)	04/84 ⇨ 02/89
7 I 735 i	M30B35(Motronic)	04/85 ⇨ 08/86
7 II 730 i, iL	M30B30(306EA), M30B30(306KA)	03/85 ⇨ 03/94
7 II 735 i, iL	M30B34(346KB), M30B35(Motronic, 9.2:1)	06/86 ⇨ 07/92
7 II 750 i, iL V12	M70B50(5012A)	09/87 ⇨ 09/94
7 III 750 i, iL	M73B54(54121), M73B54(54122)	11/94 ⇨ 07/01
8 850 CSi	S70B56(56121)	11/92 ⇨ 12/96
8 850 i, Ci	M70B50(5012A)	01/90 ⇨ 08/94
Z1 2.5	M20B25(256K1)	06/88 ⇨ 06/91
CITROËN		
XM I 3.0	UFZ(ZPJ/Z)	05/89 ⇨ 05/94
XM I 3.0 V6	SFZ(ZPJ/Z), UFZ(ZPJ/Z)	05/89 ⇨ 06/94
XM I 3.0 V6 24V	SKZ(ZPJ4/Z), UKZ(ZPJ4/Z)	07/90 ⇨ 06/94
XM II 3.0 V6	SFZ(ZPJ/Z), UFZ(ZPJ/Z)	05/94 ⇨ 10/00
XM II 3.0 V6 24V	SKZ(ZPJ4/Z), UKZ(ZPJ4/Z)	05/94 ⇨ 10/00
LANCIA		
THEMA 2850 V6 i.e.	834E.146	06/88 ⇨ 05/92
PEUGEOT		
605 3.0	UFZ(ZPJ), UKZ(ZPJ4/Z)	08/89 ⇨ 09/99
605 3.0 SV 24	UKZ(ZPJ4/Z)	08/89 ⇨ 09/99
RENAULT		
25 2.4 V6 Turbo	Z7U702	10/84 ⇨ 05/90
25 2.5 V6 Turbo	Z7U700	01/90 ⇨ 12/92
25 2.8 V6	Z7W700, Z7W701	06/87 ⇨ 02/90
25 2.8 V6 Injection	Z7W706, Z7W707, Z7W709	06/87 ⇨ 12/92
ESPACE II 2.8 V6	Z7W712, Z7W713, Z7W717	01/91 ⇨ 10/96
SAFRANE I 3.0	Z7X723	02/93 ⇨ 06/96
SAFRANE I 3.0 Biturbo 4x4	Z7X726	02/93 ⇨ 07/96
SAFRANE I 3.0 V6	Z7X721, Z7X722, Z7X723, Z7X753	12/92 ⇨ 07/96
SAFRANE I 3.0 V6 4x4	Z7X721, Z7X722, Z7X723	12/92 ⇨ 07/96
SAFRANE II 2.9 24V	L7X713	03/99 ⇨ 12/00
SAFRANE II 3.0 V6	6216K4FU	10/96 ⇨ 12/00
VOLVO		
760 2.8	B280E, B280F	08/81 ⇨ 08/91
780 2.9	B280E, B280F	08/86 ⇨ 07/90
960 I 2.8 GL	B280E, B280F	09/90 ⇨ 05/92

FACET 3.7573/21RS

1

ROTORS

Adatt./Suitable: ***BOSCH***

ALFA ROMEO
195 05 05 011 02/01
195 17 05 011 00/02
60743670
60743768

AUDI
051 905 225
052 905 225 C

BOSCH
0 237 521 024
1 234 332 350
1 234 332 360
1 234 332 366
1 234 332 374
1 234 332 387
1 234 332 393
1 234 332 399
1 234 332 402
1 234 332 414
9 231 087 677

FORD
1 660 332
6 134 771
84SF-12200-BA
89SF-12200-BA

GENERAL MOTORS
90 008 612

HOLDEN
90008612
VS21273

HYUNDAI
27131-22000

MERCEDES-BENZ
1583931
1584231
A 000 158 39 31
A 000 158 42 31

Motorcraft
EDR 130
EDR 182
EDR 183
EDR 248

OPEL
12 12 222

SAAB
88 22 686

SEAT
026 905 225 2
051 905 225
052 905 225 C
SE 021914.004B

SKODA
052 905 225 C

TOYOTA
19102-02020

VOLVO
1389425
13894258

VW
026 905 225 2
035 905 225 D
035 905 225 F
051 905 225
052 905 225 C

212 **Resistance Rotor [Ohm] 1000**
- Rotore resistenza [Ohm] 1000
- Résitance roteur [ohm] 1000
- Widerstand-Rotor [Ohm] 1000
- Resistencia rotor [ohm] 1000

ALFA ROMEO		
33 I 1.7 i.e.	AR30558	09/88 ⇨ 12/89
33 I 1.7 i.e. 4x4	AR30558	09/88 ⇨ 12/89
33 II 1.4 4x4	AR30755	07/90 ⇨ 12/92
33 II 1.4 i.e.	AR30755	06/91 ⇨ 09/94
33 II 1.4 i.e. 4x4	AR30755	07/90 ⇨ 09/94
33 II 1.5 i.e	AR30751	01/90 ⇨ 09/94
33 II 1.5 i.e.	AR30750	07/90 ⇨ 08/91
33 II 1.7 i.e.	AR30736, AR30737	01/90 ⇨ 09/94
33 II 1.7 i.e. 4x4	AR30736, AR30737	01/90 ⇨ 09/94
75 1.8	AR06202	09/85 ⇨ 06/89
75 1.8 i.e. Turbo America	61203	02/86 ⇨ 01/90
75 1.8 Turbo	AR06134	09/86 ⇨ 02/92
90 1.8	AR06202	10/84 ⇨ 07/87
90 2.0 i.e.	AR06210	10/84 ⇨ 07/87
AUDI		
80 II 1.8 GTE	PV	08/85 ⇨ 07/86
80 III 1.8	SD	09/86 ⇨ 07/88
80 III 1.8 quattro	SD	09/86 ⇨ 08/90
80 III 1.8 S	PM	09/86 ⇨ 10/91
80 III 2.0	AAD	10/90 ⇨ 08/91
80 III 2.0 E	3A	08/88 ⇨ 10/90
80 III 2.0 E quattro	3A	08/88 ⇨ 09/90
80 IV 1.6	ABM	09/91 ⇨ 12/94
80 IV 1.6 E	ADA	06/93 ⇨ 01/96

AUDI		
80 IV 2.0	ABT	09/91 ⇨ 01/96
80 IV 2.0 E	ABK	09/91 ⇨ 01/96
80 IV 2.0 E quattro	ABK	09/91 ⇨ 12/94
80 IV 2.0 quattro	ADW	11/93 ⇨ 01/96
80 IV 2.3 E	NG	09/91 ⇨ 01/96
80 IV 2.3 E quattro	NG	09/91 ⇨ 11/94
90 I 2.0	SK	03/86 ⇨ 03/87
90 II 2.0	PS	07/88 ⇨ 09/91
90 II 2.3 E	NG	04/87 ⇨ 09/91
90 II 2.3 E 20V quattro	7A	06/88 ⇨ 09/91
90 II 2.3 E quattro	NG	04/87 ⇨ 09/91
100 III 2.0 Cat	RT	01/88 ⇨ 11/90
100 III 2.0 E Cat	RT	01/88 ⇨ 11/90
100 III 2.2 E Turbo quattro	MC	08/86 ⇨ 11/90
100 III 2.2 Turbo	MC	08/86 ⇨ 11/90
100 III 2.3	NF	08/86 ⇨ 11/90
100 III 2.3 E	NF	10/86 ⇨ 11/90
100 III 2.3 E quattro	NF	08/86 ⇨ 11/90
100 III 2.3 quattro	NF	01/90 ⇨ 11/90
100 IV 2.0	AAE	12/90 ⇨ 07/94
100 IV 2.0 E	AAD, AAE, ABK	12/90 ⇨ 07/94
100 IV 2.0 E quattro	AAD	12/90 ⇨ 07/92
100 IV 2.3 E	7M15A-FKS	12/90 ⇨ 07/94
100 IV 2.3 E quattro	7M15A-FKS	12/90 ⇨ 07/94
200 II 2.2 Turbo	1B, MC	08/85 ⇨ 09/91
200 II 2.2 Turbo quattro	1B	02/88 ⇨ 11/90
A6 I 2.0	AAE, ABK, ADW	06/94 ⇨ 12/97
A6 I 2.3	7M15A-FKS	06/94 ⇨ 12/95
A6 I 2.3 quattro	7M15A-FKS	06/94 ⇨ 12/95
A4 I 1.6	ADP	11/94 ⇨ 09/01
CABRIOLET 2.0 E	ABK	01/93 ⇨ 07/98
CABRIOLET 2.3 E	NG	05/91 ⇨ 07/94
COUPE 2.0	3A, AAD, ABK	05/89 ⇨ 12/96
COUPE 2.3	NG	10/88 ⇨ 12/96
COUPE 2.3 quattro	NG	01/87 ⇨ 12/96
FORD		
ESCORT IV 1.4	F6B	01/86 ⇨ 07/90
ESCORT IV 1.6 Turbo RS	LNB	01/86 ⇨ 07/90
ESCORT IV 1.6 XR3i	LR2, LRB	01/86 ⇨ 07/90
FIESTA III 1.4	F6E	03/89 ⇨ 12/95
GRANADA 1.7	TV17LC	08/77 ⇨ 05/82
GRANADA 2.0	NEP	08/79 ⇨ 08/85
SIERRA I 1.8	REB	10/84 ⇨ 12/86
SIERRA I 2.0	NET, NR2, NRD	08/82 ⇨ 12/86
SIERRA I 2.0 i	NR2	03/85 ⇨ 12/86
ESCORT III 1.4 i	F6B	02/86 ⇨ 07/90
ORION I 1.4 Cat	F6B	02/87 ⇨ 07/90
ORION I 1.6 i	LRB	03/86 ⇨ 07/90
SCORPIO I 1.8	REC	04/85 ⇨ 02/92
SCORPIO I 2.0	TL20H-NE4, TL20H-NER	10/84 ⇨ 02/90
SCORPIO I 2.0 i	NRA, NRI	04/85 ⇨ 02/92
SIERRA II 2.0	N8C, NES	01/87 ⇨ 02/93
TRANSIT II 2.0	N6TS	10/85 ⇨ 03/91
TRANSIT II 2.0 Cat	N6T	11/85 ⇨ 09/92
TRANSIT II 2.0 EFI	--	08/91 ⇨ 08/94
HOLDEN		
BARINA 1.4 i	C14NZ	04/94 ⇨ 07/97
BARINA_SB 1.2i	C12NZ	04/94 ⇨ 07/97
COMBO 1.4 i	C14NZ	03/96 ⇨ 07/97
COMBO_SB 1.4i	C14NZ	04/94 ⇨ 07/97
HYUNDAI		
S COUPE 1.5 i	G4EK	04/92 ⇨ 05/96
S COUPE 1.5 i Turbo	G4EK-TC	04/91 ⇨ 05/96
MERCEDES-BENZ		
124 200 CE	M102.963	09/89 ⇨ 06/93
124 230 CE	M102.982	03/87 ⇨ 12/92
124 230 CE Cat	M102.982	06/89 ⇨ 12/92
190 2.0	M102.924	08/83 ⇨ 05/90
190 2.3	M102.985	09/87 ⇨ 09/88
190 2.3 E	M102.985	10/82 ⇨ 09/88
190 E 1.8	M102.910, M102.919	04/90 ⇨ 12/93
190 E 2.0	M102.962	10/82 ⇨ 08/93
190 E 2.3	M102.985	09/86 ⇨ 08/93
190 E 2.3-16	M102.983	04/84 ⇨ 08/88
190 E 2.5-16	M102.990	09/88 ⇨ 08/93
190 E 2.5-16 Evolution	M102.991	03/89 ⇨ 08/93
CLASSE G II 200 GE	M102.965	01/90 ⇨ 07/93
CLASSE G II 230 GE	M102.979	09/89 ⇨ 07/96
KOMBI II 200 T	M102.922	09/85 ⇨ 05/90
KOMBI II 200 TE	M102.962, M102.963	09/88 ⇨ 08/92
KOMBI II 230 E Chassis	M102.982	09/86 ⇨ 06/93
KOMBI II 230 TE	M102.982	09/85 ⇨ 08/92
KOMBI II 230 TE Cat	M102.982	06/89 ⇨ 08/92
TRE VOLUMI II 200	M102.922	12/85 ⇨ 10/92
TRE VOLUMI II 200 E	M102.963	09/88 ⇨ 08/93
TRE VOLUMI II 230 E	M102.982	12/84 ⇨ 06/93
TRE VOLUMI II 230 E Cat	M102.982	06/89 ⇨ 06/93

OPEL		
ASTRA F 1.4 i	C14NZ	09/91 ⇨ 01/05
ASTRA F 2.0 GSI 16V	C20XE	09/91 ⇨ 01/98
ASTRA F 2.0 i 16V	C20XE	03/93 ⇨ 01/98
CALIBRA A 2.0 i 16V	C20XE	06/90 ⇨ 02/94
CALIBRA A 2.0 i 16V 4x4	C20XE	06/90 ⇨ 02/94
CALIBRA A 2.0 i Turbo 4x4	C20LET	08/91 ⇨ 07/97
COMBO B 1.2	C12NZ	07/94 ⇨ 10/01
COMBO B 1.4	C14NZ	07/94 ⇨ 10/01
CORSA A 1.2 i	C12NZ	09/89 ⇨ 03/93
CORSA A 1.4 i	C14NZ	01/85 ⇨ 03/93
CORSA A 1.6 GSI	E16SE	05/88 ⇨ 03/92
CORSA B 1.2 i	12NZ, C12NZ	03/93 ⇨ 09/00
CORSA B 1.4 i	C14NZ	03/93 ⇨ 09/00
FRONTERA A 2.4 i	C24NE	03/92 ⇨ 10/98
KADETT E 1.4 i	C14NZ	01/90 ⇨ 07/94
KADETT E 1.6	16SV	09/86 ⇨ 12/91
KADETT E 1.6 i	16SV	07/89 ⇨ 02/93
KADETT E 1.6 S	16SV	09/86 ⇨ 08/91
KADETT E 2.0 GSI 16V	20XE	12/87 ⇨ 08/91
KADETT E 2.0 GSI 16V Cat	C20XE	03/88 ⇨ 08/91
OMEGA A 2.4 i	C24NE	09/88 ⇨ 03/94
VECTRA A 1.6	16SV	09/88 ⇨ 05/93
VECTRA A 1.6 S	16SV	09/88 ⇨ 05/93
VECTRA A 2.0 i 16V	20XEJ	02/89 ⇨ 10/90
VECTRA A 2.0 i 16V 4x4	C20XE	08/89 ⇨ 08/95
VECTRA A 2.0 i 16V Cat	C20XE	02/90 ⇨ 11/95
VECTRA A 2.0 i Turbo 4x4	C20LET	06/94 ⇨ 11/95
VECTRA A 2000 16V 4x4	20XEJ	01/89 ⇨ 10/90
VECTRA A 2000/GT 16V	20XEJ	01/89 ⇨ 06/94
VECTRA A 2000/GT 16V Cat	C20XE	02/90 ⇨ 11/95
VECTRA A 2000/GT 16V Cat 4x4	C20XE	02/90 ⇨ 11/95

PUCH		
G-MODELL 230 GE	M102.989	07/89 ⇨ 08/93

SAAB		
9-3 2.0 i	B204I	02/98 ⇨ 08/03
9-3 2.3 i	B234I	02/98 ⇨ 08/03
900 II 2.0 i	B204I, B206I	07/93 ⇨ 02/98
900 II 2.3 -16	B234I	07/93 ⇨ 02/98

SEAT		
AROSA 1.0	AER, ALL	05/97 ⇨ 06/04
AROSA 1.4	AEX, AKV, APQ	05/97 ⇨ 06/04
CORDOBA I 1.0 16V	AST, AVZ	05/00 ⇨ 10/02
CORDOBA I 1.0 CL	AAU	02/93 ⇨ 06/96
CORDOBA I 1.0 i	AER	09/96 ⇨ 10/02
CORDOBA I 1.3	AAV	02/93 ⇨ 08/94
CORDOBA I 1.4	ANX	12/97 ⇨ 04/99
CORDOBA I 1.4 i	ABD, AEX, AKV, APQ	06/94 ⇨ 12/02
CORDOBA I 1.4 i 16V	AFH	09/96 ⇨ 10/02
CORDOBA I 1.6 i	1F, ABU, AEE, AFT, ALM	02/93 ⇨ 06/99
CORDOBA I 1.8 i	ABS, ACC, ADZ	02/93 ⇨ 09/02
CORDOBA I 1.8 i 16V	148D	10/93 ⇨ 08/96
CORDOBA I 2.0 i	2E, AGG	02/93 ⇨ 06/99
CORDOBA I 2.0 i 16V	ABF	08/96 ⇨ 06/99
IBIZA I 1.2 i	021C.1000	01/89 ⇨ 05/93
IBIZA I 1.5 i	021B.2000	10/86 ⇨ 05/93
IBIZA II 1.0	AAU	03/93 ⇨ 09/96
IBIZA II 1.0 16V	AST, AVZ	10/99 ⇨ 02/02
IBIZA II 1.0 i	AER	09/96 ⇨ 02/02
IBIZA II 1.3 i	AAV	03/93 ⇨ 08/99
IBIZA II 1.4	ANX	12/97 ⇨ 04/99
IBIZA II 1.4 i	ABD, AEX, AKV, APQ	09/93 ⇨ 02/02
IBIZA II 1.4 i 16V	AFH	06/97 ⇨ 02/02
IBIZA II 1.6 i	1F, ABU, AEE, AFT, ALM	03/93 ⇨ 06/99
IBIZA II 1.8 i	ABS, ACC, ADZ	03/93 ⇨ 08/99
IBIZA II 1.8 i 16V	148D	11/93 ⇨ 08/96
IBIZA II 2.0 i	2E, AGG	03/93 ⇨ 08/99
IBIZA II 2.0 i 16V	ABF	08/96 ⇨ 08/99
INCA 1.4 i	AEX, AKV, APQ	11/95 ⇨ 06/03
INCA 1.6 i	1F, AEE	11/95 ⇨ 05/98
ALHAMBRA I / II 2.0 i	ADY	04/96 ⇨ 03/10
MALAGA 1.5 i	021B.2000	01/87 ⇨ 12/93
TOLEDO I 1.6 i	1F, AFT	05/91 ⇨ 03/99
TOLEDO I 1.8 16V	KR, PL	05/91 ⇨ 03/99
TOLEDO I 1.8 GT	KR	05/91 ⇨ 11/92
TOLEDO I 1.8 i	ABS, ADZ, RP	05/91 ⇨ 12/96
TOLEDO I 2.0 i	2E, AGG	05/91 ⇨ 03/99

SKODA		
FELICIA 1.6	6A16XHT	06/97 ⇨ 04/02
FELICIA 1.6 GLX	6A16XHT	08/95 ⇨ 03/98
FELICIA 1.6 LX	6A16XHT	08/95 ⇨ 03/98
OCTAVIA I 1.6	6A16XHT	09/96 ⇨ 09/04

TOYOTA		
AVENSIS I 1.6	4A-FE	09/97 ⇨ 10/00
CARINA E 1.6	4A-FE	04/92 ⇨ 09/97
CARINA E 1.6 16V	4A-FE	12/94 ⇨ 09/97
CARINA E 1.6 GLI	4A-FE	04/92 ⇨ 09/97
CARINA E 1.6 i	4A-FE	02/95 ⇨ 09/97

VAUXHALL		
ASTRA III 1.4 i	C14NZ	09/91 ⇨ 09/98
ASTRA III 2.0 i 16V	C20XE	09/91 ⇨ 02/98
ASTRAVAN I 1.4 i	C14NZ	09/91 ⇨ 08/95
CALIBRA 2.0 i 16V	C20XE	06/90 ⇨ 02/94
CALIBRA 2.0 i 16V 4x4	C20XE	06/90 ⇨ 02/94
CALIBRA 2.0 i Turbo 4x4	C20LET	03/92 ⇨ 07/97
COMBO B 1.2	C12NZ	07/94 ⇨ 10/01
COMBO B 1.4	C14NZ	07/94 ⇨ 10/01
CORSA B 1.2 i	C12NZ	03/93 ⇨ 09/00
CORSA B 1.4 i	C14NZ	03/93 ⇨ 09/00
CORSAVAN I 1.4 i	C14NZ	01/94 ⇨ 09/00
FRONTERA A 2.4 i	C24NE	03/92 ⇨ 10/98

VOLKSWAGEN (BR)		
CADDY 1.6i	MY4	11/98 ⇨
GOL 1.0i	510	11/96 ⇨
GOL 1.0i 16v	511	09/97 ⇨
GOL 1.6i	540, 541	10/96 ⇨
GOL 1.8i	542, 543	10/96 ⇨
GOL 2.0i	546, 547	10/96 ⇨
LOGUS 2.0i	809	12/92 ⇨ 05/94
PARATI 1.0i 16v	511	09/97 ⇨
PARATI 1.6i	540, 541	10/96 ⇨
PARATI 1.8i	542	10/96 ⇨
PARATI 2.0i	546, 547	10/96 ⇨
POINTER 2.0i	809	11/93 ⇨ 05/94
POLO 1.6	MJ3, MY4	07/00 ⇨
POLO 1.8	MJ2, MY5, MY6	12/96 ⇨
SAVEIRO 1.6i	540, 541	10/96 ⇨
SAVEIRO 1.8i	542, 543	10/96 ⇨
SAVEIRO 2.0i	546, 547	10/96 ⇨

VOLVO		
240 2.0	B200F	09/88 ⇨ 12/93
240 2.3	B230F, B230FD, B230FX, B230K	08/86 ⇨ 08/93
240 2.3 Cat	B230F	08/91 ⇨ 07/92
240 2.3 i Cat	B230F	08/86 ⇨ 07/93
340-360 2.0	B200E, B200EA, B200F, B200K	08/84 ⇨ 07/90

VW		
PASSAT IV 1.6	ADP	10/96 ⇨ 11/00
POLO II 1.0	AAU	01/85 ⇨ 09/94
POLO II 1.0 Cat	AAU	08/89 ⇨ 09/94
POLO II 1.3	3F, AAV, GK	09/82 ⇨ 09/94
POLO II 1.3 Cat	3F, AAV	07/87 ⇨ 09/94
POLO II 1.3 G40	PY	01/87 ⇨ 09/94
JETTA II 1.8	PB, RD, RV	01/84 ⇨ 10/91
JETTA II 1.8 16V	KR, PL	08/86 ⇨ 10/91
JETTA II 1.8 Cat	PF	01/87 ⇨ 10/91
JETTA II 1.8 G60	PG	04/90 ⇨ 07/91
CADDY II 1.4	AEX, AKV, APQ	11/95 ⇨ 06/03
CADDY II 1.6	1F, AEE	11/95 ⇨ 12/00
CADDY II 60 1.4	AEX, APQ	11/95 ⇨ 01/04
CADDY II 75 1.6	1F, AEE	11/95 ⇨ 05/97
CORRADO 1.8 16V	KR	04/89 ⇨ 07/92
CORRADO 1.8 G60	PG	09/88 ⇨ 09/93
CORRADO 2.0 i	2E, ADY	04/93 ⇨ 12/95
CORRADO 2.0 i 16V	7TZ220XS560	08/91 ⇨ 12/95
DERBY 1.3	GK	09/82 ⇨ 12/84
GOLF I 1.8	2H	08/89 ⇨ 03/93
GOLF II 1.8	RV	08/87 ⇨ 10/91
GOLF II 1.8 GTI	PB, RD	08/83 ⇨ 10/91
GOLF II 1.8 GTI 16V	KR, PL	02/86 ⇨ 10/91
GOLF II 1.8 GTI Cat	PF	01/87 ⇨ 10/91
GOLF II 1.8 GTI G60	PG	04/90 ⇨ 07/91
GOLF II 1.8 GTI G60 Syncro	1H, PG	08/88 ⇨ 12/91
GOLF II 1.8 Syncro	3E82	08/88 ⇨ 07/91
PASSAT III 1.6	AEK, AFT	07/94 ⇨ 08/96
PASSAT III 1.8	AAM, ABS, ADZ, KR, PB, PF, RP	02/88 ⇨ 05/97
PASSAT III 1.8 16V	KR	04/88 ⇨ 12/89
PASSAT III 1.8 GL	KR	08/91 ⇨ 09/93
PASSAT III 2.0	2E, ADY, AEP, AGG	02/90 ⇨ 05/97
PASSAT III 2.0 16V	7TZ220XS560, ABF	08/88 ⇨ 05/97
PASSAT III 2.0 Syncro	2E, ADY, AGG	03/90 ⇨ 12/96
PASSAT III 2.0i	ACX	08/92 ⇨ 12/96
GOLF III 1.4	ABD, AEX	10/91 ⇨ 04/99
GOLF III 1.6	ABU, AEA, AEE, AEK, AFT, AKS	09/92 ⇨ 04/99
GOLF III 1.8	AAM, ABS, ADZ	08/91 ⇨ 04/99
GOLF III 1.8 Syncro	ABS, ADZ	01/93 ⇨ 04/99
GOLF III 2.0	2E, ADY, AEP, AGG, AKR	11/91 ⇨ 04/99
GOLF III 2.0 GL	AEP	08/95 ⇨ 09/97
GOLF III 2.0 Syncro	AGG	08/95 ⇨ 04/99
GOLF IV 1.6	AFT, AKS	06/98 ⇨ 06/02
GOLF IV 1.8	AAM, ADZ, ANN, ANP	06/98 ⇨ 06/02
GOLF IV 2.0	AGG, AKR, ATU, AWF, AWG	06/98 ⇨ 06/02
LUPO 1.0	AER, ALL	09/98 ⇨ 07/05
POLO III 1.4	AEX, AKV, ANX, APQ	05/97 ⇨ 09/01
POLO III 1.6	AEA, AEE, AFT, ALM	09/94 ⇨ 09/01

VW		
POLO III 100 1.4 16V	AFH	04/96 ⇨ 10/99
POLO III 100 1.6	AFT	12/95 ⇨ 09/01
POLO III 2.0	ADC	08/99 ⇨ 09/01
POLO III 45 1.0	AEV	10/94 ⇨ 09/96
POLO III 50 1.0	AER, ALL	09/96 ⇨ 10/99
POLO III 54 1.4	ANX	01/98 ⇨ 08/99
POLO III 55 1.3	ADX	10/94 ⇨ 04/97
POLO III 55 1.4	AEX	08/95 ⇨ 10/99
POLO III 60 1.4	AEX, AKV, APQ	07/95 ⇨ 09/01
POLO III 75 1.6	1F, AEA, AEE, AHS, ALM	10/94 ⇨ 10/99
POLO III 75 1.6 4motion	AEA	08/95 ⇨ 10/99
POLO III 90 1.8	ADD	01/97 ⇨ 09/01
POLO IV 1.0	AER	08/96 ⇨ 12/01
SCIROCCO I 1.1	FA	04/74 ⇨ 07/79
SCIROCCO II 1.8 16V	KR, PL	10/85 ⇨ 07/92
SHARAN I 2.0	ADY	09/95 ⇨ 03/10
TRANSPORTER IV 2.0	AAC	07/90 ⇨ 04/03
TRANSPORTER IV 2.5	AAF, ACU, AET, AEU, APL, AVT	09/90 ⇨ 06/03
TRANSPORTER IV 2.5 Syncro	AAF, ACU, AET, AEU, APL, AVT	08/92 ⇨ 04/03
VENTO 1.4	ABD	11/91 ⇨ 09/98
VENTO 1.6	ABU, AEA, AEK, AFT, AKS	09/92 ⇨ 02/99
VENTO 1.8	AAM, ABS, ADZ	11/91 ⇨ 09/98
VENTO 2.0	2E, ADY	11/91 ⇨ 09/98

FACET **3.7573/22RS** 3

ROTORS

Adatt./Suitable: ***BOSCH***

BOSCH
1 234 332 341
1 234 332 364
1 234 332 371

VOLVO
1357418
13574181
1367052
13670526

[00] **Eliminated on 16-03-2021. Please verify the availability through our local distributors**

- Eliminato il 16-03-2021. Verificare la disponibilità presso i nostri distributori
- Eliminé le 16-03-2021. Verifier la disponibilité auprès de nos distributeurs sur place
- Am 16-03-2021 gestrichen. Evtl. Verfügbarkeit bitte bei unseren Händlern prüfen
- Eliminado en fecha 16-03-2021. Verificar la disponibilidad a través de nuestros distribuidores locales

[212] **Resistance Rotor [Ohm] 1000**

- Rotore resistenza [Ohm] 1000
- Résitance roteur [ohm] 1000
- Widerstand-Rotor [Ohm] 1000
- Resistencia rotor [ohm] 1000

[310] **RPM to [1/min] 6200**

- N° giri fino a [1/min.] 6200
- Régime mot. jusqu'à [1/min] 6200
- Drehzahl bis [1/min] 6200
- vel. giro hasta [1/min] 6200

VOLVO		
240 2.0	B200E, B200F, B200K	08/83 ⇨ 12/93
240 2.3	B230A, B230E, B230FD, B230FX	08/83 ⇨ 08/93
240 2.3 Cat	B230F	08/91 ⇨ 07/92
340-360 2.0	B200E, B200EA, B200F, B200K	08/84 ⇨ 07/90
740 2.3	B230A	08/84 ⇨ 07/86

FACET 3.7573/23RS — 3

ROTORS

Adatt./Suitable: ***BOSCH***

ALFA ROMEO
60755091
BOSCH
1 234 332 370
SAAB
75 64 420

[212] Resistance Rotor [Ohm] 1000
- Rotore resistenza [Ohm] 1000
- Résitance roteur [ohm] 1000
- Widerstand-Rotor [Ohm] 1000
- Resistencia rotor [ohm] 1000

ALFA ROMEO		
33 II 1.7 16V	AR30746, AR30747	01/90 ⇨ 09/94
33 II 1.7 16V 4x4	AR30746, AR30747	01/90 ⇨ 09/94
SPIDER I 2.0i [CAN]	AR01588	09/90 ⇨ 10/93
SPIDER I 2.0i [USA]	AR01588	09/90 ⇨ 10/93
SPIDER I 2.0i Veloce [CAN]	AR01588	09/90 ⇨ 10/93
SPIDER I 2.0i Veloce [USA]	AR01588	09/90 ⇨ 10/93
SAAB		
900 I 2.0 -16	5B6304GS, B202XI	01/86 ⇨ 06/94
900 I 2.0 Turbo-16	B202XL	11/85 ⇨ 06/94
900 I 2.0 Turbo-16 S	B202XL	01/84 ⇨ 06/94
900 I 2.0 Turbo-16 S Cat	B202XL	01/89 ⇨ 12/93
900 I 2.1 -16	B212I	08/90 ⇨ 06/94
9000 2.0 -16	5B6304GS, B202XI	12/85 ⇨ 01/93
9000 2.0 -16 CS	5B6304GS	01/89 ⇨ 12/98
9000 2.0 -16 Turbo	B202XL	09/84 ⇨ 08/93
9000 2.0 -16 Turbo CD	B202XL	09/88 ⇨ 08/93
9000 2.3 -16 CD	B234I	08/89 ⇨ 12/98
9000 2.3 -16 CS	B234I	09/89 ⇨ 12/98

FACET 3.7573/25RS — 3,5

ROTORS

Adatt./Suitable: ***BOSCH***

BOSCH
1 234 332 365
1 234 332 417
MERCEDES-BENZ
A 103 158 02 31
A 103 158 03 31

[03] Supplied until depletion
- Fornibile fino ad esaurimento delle scorte
- Fourni jusqu'à épuisement du stock
- Lieferbar solange vorrat reicht
- Suministrado hasta el stock termina

[212] Resistance Rotor [Ohm] 1000
- Rotore resistenza [Ohm] 1000
- Résitance roteur [ohm] 1000
- Widerstand-Rotor [Ohm] 1000
- Resistencia rotor [ohm] 1000

MERCEDES-BENZ		
CLASSE E I E 300 4-matic	M103.985	06/93 ⇨ 06/95
CLASSE E I E 300 T 4-matic	M103.985	06/93 ⇨ 06/96
124 300 CE	M103.983	03/87 ⇨ 05/93
190 2.6	M103.942	10/82 ⇨ 09/88
190 E 2.6	M103.942	09/86 ⇨ 08/93
190 E 3.2 AMG	M103.983	01/88 ⇨
CLASSE G II 300 GE	M103.987	09/89 ⇨ 09/97
CLASSE S II 260 SE	M103.941	09/85 ⇨ 06/91
CLASSE S II 300 SE, SEL	M103.981	09/85 ⇨ 06/91
CLASSE SL III 300 SL	M103.982	09/85 ⇨ 08/89
CLASSE SL IV 300 SL	M103.984	03/89 ⇨ 08/93
KOMBI II 260 TE FGST.	M103.940	09/89 ⇨ 08/92
KOMBI II 300 TE	M103.983	01/86 ⇨ 08/92
KOMBI II 300 TE 4-matic	M103.985	09/86 ⇨ 06/93
TRE VOLUMI II 260 E	M103.940	09/85 ⇨ 08/92
TRE VOLUMI II 260 E 4-matic	M103.943	09/86 ⇨ 08/92
TRE VOLUMI II 300 E	M103.983	06/85 ⇨ 08/92
MERCEDES-BENZ		
TRE VOLUMI II 300 E 4-matic	M103.943, M103.983, M103.985	01/86 ⇨ 12/93
PUCH		
G-MODELL 300 GE	M103.987	06/89 ⇨ 08/93

FACET 3.7573/26RS — 04

ROTORS

Adatt./Suitable: ***BOSCH***

BOSCH
1 234 332 382
MERCEDES-BENZ
A 000 158 40 31

[212] Resistance Rotor [Ohm] 1000
- Rotore resistenza [Ohm] 1000
- Résitance roteur [ohm] 1000
- Widerstand-Rotor [Ohm] 1000
- Resistencia rotor [ohm] 1000

MERCEDES-BENZ		
CLASSE G II 500 GE	M117.965	09/93 ⇨ 12/94
CLASSE S II 420 SE, SEL	M116.965	10/85 ⇨ 06/91
CLASSE S II 420 SEC	M116.965	10/85 ⇨ 06/91
CLASSE S II 500 SE, SEL	M117.965	09/85 ⇨ 06/91
CLASSE S II 500 SE, SEL Cat	M117.965	06/89 ⇨ 06/91
CLASSE S II 500 SEC	M117.965	09/85 ⇨ 06/91
CLASSE S II 500 SEC Cat	M117.965	06/89 ⇨ 06/91
CLASSE S II 560 SE, SEL	M117.968	10/85 ⇨ 06/91
CLASSE S II 560 SEC	M117.968	10/85 ⇨ 06/91
CLASSE SL III 420 SL	M116.964	01/86 ⇨ 08/89
CLASSE SL III 500 SL	M117.964	01/86 ⇨ 08/89
CLASSE SL III 560 SL	M117.967	09/85 ⇨ 12/89

FACET 3.7573/27RS — 3

ROTORS

Adatt./Suitable: ***BOSCH***

BOSCH
1 234 332 381
GENERAL MOTORS
90 230 573
90 442 356
HOLDEN
VS19424
OPEL
12 12 206
12 12 224

[212] Resistance Rotor [Ohm] 1000
- Rotore resistenza [Ohm] 1000
- Résitance roteur [ohm] 1000
- Widerstand-Rotor [Ohm] 1000
- Resistencia rotor [ohm] 1000

HOLDEN		
CALIBRA_YE 2.0i	C20NE	09/91 ⇨ 07/95
OPEL		
ASCONA C 1.8	18SE, E18NV	09/81 ⇨ 08/88
ASCONA C 1.8 E	S18NV	01/85 ⇨ 08/86
ASCONA C 2.0 i	20NE	09/86 ⇨ 08/88
ASCONA C 2.0 i Cat	C20NE	09/86 ⇨ 08/88
ASCONA C 2.0 i GT	20SEH	03/87 ⇨ 08/88
ASTRA F 1.8 i	C18NZ	09/91 ⇨ 09/98
ASTRA F 2.0 i	C20NE	09/91 ⇨ 09/98
CALIBRA A 2.0 i	C20NE	08/89 ⇨ 12/96
CALIBRA A 2.0 i 4x4	C20NE	06/90 ⇨ 07/97
FRONTERA A 2.0 i	C20NE	03/92 ⇨ 10/98
KADETT E 1.8	18SE	01/86 ⇨ 08/91
KADETT E 1.8 i	C18NZ, S18NV	06/85 ⇨ 05/92
KADETT E 1.8 S	E18NV	09/87 ⇨ 08/91
KADETT E 2.0 GSI	20NE, 20SEH	09/86 ⇨ 08/91
KADETT E 2.0 GSI Cat	C20NE	09/86 ⇨ 08/91
KADETT E 2.0 i	20NE	10/86 ⇨ 02/93
KADETT E 2.0 i Cat	C20NE	10/86 ⇨ 02/93
OMEGA A 1.8	18SEH, E18NVR, S18NV	09/86 ⇨ 03/94
OPEL		
OMEGA A 1.8 N	18NV	09/86 ⇨ 08/87
OMEGA A 1.8 S	18SV	09/86 ⇨ 03/94
OMEGA A 2.0	20SE, C20NE	09/86 ⇨ 04/94
OMEGA A 2.0 i	C20NE	09/86 ⇨ 04/94
OMEGA B 2.0	20SE	03/94 ⇨ 12/00
VECTRA A 1.8 i	18SV	09/88 ⇨ 10/90
VECTRA A 1.8 i Cat	C18NZ	03/90 ⇨ 11/95
VECTRA A 1.8 S	18SV, E18NVR	09/88 ⇨ 10/90
VECTRA A 1.8 S 4x4	E18NVR	01/89 ⇨ 07/89
VECTRA A 2.0 i	20NE, 20SEH	09/88 ⇨ 09/92
VECTRA A 2.0 i 4x4	20NE, 20SEH	01/89 ⇨ 07/92
VECTRA A 2.0 i Cat	C20NE	09/88 ⇨ 11/95
VECTRA A 2.0 i Cat 4x4	C20NE	01/89 ⇨ 11/95
VECTRA A 2.0 i GT	20SEH	09/88 ⇨ 11/95
VAUXHALL		
ASTRA III 1.8 i	C18NZ	09/91 ⇨ 09/98
ASTRA III 2.0 i	C20NE	09/91 ⇨ 09/98
CALIBRA 2.0 i	C20NE	06/90 ⇨ 07/97
CALIBRA 2.0 i 4x4	C20NE	06/90 ⇨ 07/97
FRONTERA A 2.0	C20NE	04/95 ⇨ 08/98
FRONTERA A 2.0 i	C20NE	03/92 ⇨ 10/98
OMEGA B 2.0	20SE	09/95 ⇨ 09/96

FACET 3.7573/31 — 3

ROTORS

Adatt./Suitable: ***BOSCH***

BOSCH
9 231 064 336
9 231 064 346
FORD AUSTRALIA
ADR-3
HOLDEN
GB901
Motorcraft
ADR 3

FORD AUSTRALIA		
FAIRLANE 3.2i EFi	--	01/89 ⇨
FAIRLANE 3.9i EFi	--	01/89 ⇨
FAIRLANE 3.9i MPEFi	--	01/89 ⇨
FAIRLANE 4.0i MPEFi	--	01/89 ⇨
FAIRLANE ZL 4.1l	--	01/84 ⇨
FALCON 3.2 Efi	--	03/88 ⇨ 12/88
FALCON 3.9 Efi	--	07/91 ⇨ 04/92
FALCON 3.9 MPFi	--	03/88 ⇨ 04/92
FALCON 3.9 SPFfi	--	03/88 ⇨ 04/92
HOLDEN		
CALAIS_VN 5.0i	5.0V8EFI	08/88 ⇨ 09/91
CALAIS_VP 5.0i Sedan	5.0V8EFI	10/91 ⇨ 07/93
CALAIS_VR 5.0i Sedan	5.0PFIV8	07/93 ⇨ 04/95
CALAIS_VS 5.0i Sedan	5.0V8PFI	04/95 ⇨ 05/96
CALAIS_VS-II 5.0i Sedan	5.0V8PFI	06/96 ⇨ 08/97
CAPRICE_VQ 5.0i Sedan	5.0V8EFI	03/90 ⇨ 11/93
CAPRICE_VR 5.0i Sedan	5.0PFIV8	12/93 ⇨ 04/95
CAPRICE_VS 5.0i Sedan	5.0V8PFI	03/95 ⇨ 08/96
CAPRICE_VS-II 5.0i Sedan	5.0V8PFI	09/96 ⇨ 08/97
COMMODORE VR 5.0i	5.0PFIV8	07/93 ⇨ 04/95
COMMODORE VR 5.0i Wagon	5.0PFIV8	07/93 ⇨ 04/95
COMMODORE VS 5.0i	5.0V8PFI	04/95 ⇨ 05/96
COMMODORE VS-II 5.0i	5.0V8PFI	06/96 ⇨ 08/97
COMMODORE_VL 5.0i Group A SS	5.0V8EFI	02/87 ⇨ 07/88
COMMODORE_VN 5.0i	5.0V8EFI	08/88 ⇨ 09/91
COMMODORE_VN 5.0i Group A SS	5.0V8EFI	08/88 ⇨ 09/91
COMMODORE_VP 5.0i	5.0V8EFI	10/91 ⇨ 07/93
FORMULA_VR 5.0i	5.0PFIV8	07/93 ⇨ 04/95
STATESMAN_VQ 5.0i	5.0V8EFI	03/90 ⇨ 11/93
STATESMAN_VR 5.0i	5.0PFIV8	12/93 ⇨ 04/95
STATESMAN_VS 5.0i	5.0V8PFI	03/95 ⇨ 08/96
STATESMAN_VS-II 5.0i	5.0V8PFI	09/96 ⇨ 08/97
UTILITY_VG 5.0i	5.0V8EFI	08/88 ⇨ 09/91
UTILITY_VP 5.0i	5.0V8EFI	10/91 ⇨ 07/93
UTILITY_VR COUPÈ 5.0i	5.0PFIV8	07/93 ⇨ 04/95

FACET 3.7573/40RS — 3,5

ROTORS

Adatt./Suitable: ***BOSCH***

BOSCH
1 234 332 395
FORD
6 177 981
Motorcraft
EDR 240

[212] Resistance Rotor [Ohm] 1000
- Rotore resistenza [Ohm] 1000
- Résitance roteur [ohm] 1000
- Widerstand-Rotor [Ohm] 1000
- Resistencia rotor [ohm] 1000

FORD		
SCORPIO I 2.0 i	N9B, N9D, N9F, NRA, NRI	05/89 ⇨ 09/94
SIERRA II 2.0 i	N4A, N4I, N9B	01/87 ⇨ 02/93
TRANSIT II 2.0	NSF, NSG	06/94 ⇨ 03/00
TRANSIT II 2.0 CNG	NSH	06/94 ⇨ 03/00
TRANSIT TOURNEO 2.0	NSH	11/94 ⇨ 12/00

FACET 3.7573/46RS — 3,5

ROTORS

Adatt./Suitable: ***BOSCH***

BOSCH
1 234 332 408
1 234 332 422
MERCEDES-BENZ
A 119 158 01 31
A 119 158 02 31
A 119 158 03 31

[212] Resistance Rotor [Ohm] 1000
- Rotore resistenza [Ohm] 1000
- Résitance roteur [ohm] 1000
- Widerstand-Rotor [Ohm] 1000
- Resistencia rotor [ohm] 1000

MERCEDES-BENZ		
CLASSE E I E 420	M119.975	06/93 ⇨ 06/95
CLASSE E I E 500	M119.974	06/93 ⇨ 06/95
CLASSE E I E 60 AMG	M119.974(AMG6.0)	05/94 ⇨ 06/95
CLASSE S III 400 SE, SEL/S420	M119.971	02/91 ⇨ 10/98
CLASSE S III 500 SE, SEL	M119.970	02/91 ⇨ 10/98
CLASSE S III 500 SEC / CL 500	M119.970	10/92 ⇨ 12/99
CLASSE S III S 420	M119.971	01/93 ⇨ 10/98
CLASSE S III S 500	M119.970	01/93 ⇨ 10/98
CLASSE S III SEC/CL 420	M119.971	10/94 ⇨ 02/99
CLASSE SL IV 500	M119.972	09/92 ⇨ 10/01
CLASSE SL IV 500 SL	M119.960	09/89 ⇨ 08/92
TRE VOLUMI II 400 E 4.2	M119.975	10/92 ⇨ 06/93
TRE VOLUMI II 500 E	M119.974	01/91 ⇨ 06/93
TRE VOLUMI II 500 E AMG 6.0	M119.974(AMG6.0)	01/92 ⇨ 06/93

FACET 3.7573/47RS — 3,5

ROTORS

Adatt./Suitable: ***BOSCH***

BOSCH
1 234 332 390
RENAULT
74 31 367 783
VOLVO
1367783
13677836

[212] Resistance Rotor [Ohm] 1000
- Rotore resistenza [Ohm] 1000
- Résitance roteur [ohm] 1000
- Widerstand-Rotor [Ohm] 1000
- Resistencia rotor [ohm] 1000

RENAULT		
SAFRANE II 2.5 20V	N7U700, N7U701	07/96 ⇨ 12/00

VOLVO		
850 2.0	B5202S, B5204F, B5204FS	06/91 ⇨ 12/96
850 2.0 10V	B5202FS	08/94 ⇨ 12/97
850 2.0 Turbo	B5204FT, B5204T, B5204T2	02/93 ⇨ 10/97
850 2.3	B5234FS	01/96 ⇨ 10/96
850 2.3 T5	9M9T872	02/93 ⇨ 12/96
850 2.3 T5-R	B5234T4	08/95 ⇨ 12/96
850 2.3 Turbo R	B5234T5	06/95 ⇨ 10/97
850 2.4	B5252, B5252FS, B5254S	06/91 ⇨ 12/96
850 2.4 AWD	B5254T	04/96 ⇨ 12/96
850 2.4 GLE	B5254T	09/93 ⇨ 10/97
850 2.5 10V	B5252FS	06/91 ⇨ 12/97
850 2.5 20V	B5254FS	08/91 ⇨ 12/97
C70 I 2.0	B5204T2	03/97 ⇨ 10/05
C70 I 2.0 T	B5204T3	03/97 ⇨ 10/05
C70 I 2.3 T5	B5234T3	03/98 ⇨ 10/05
C70 I 2.3 T-5	B5234T3	03/97 ⇨ 09/02
C70 I 2.4 T	B5254T	03/97 ⇨ 10/05
S70 2.0	B5202FS, B5202S, B5204T2	01/97 ⇨ 11/00
S70 2.0 Turbo	B5204T3	01/97 ⇨ 11/00
S70 2.3	B5234FS, B5234T7	01/97 ⇨ 07/99
S70 2.3 AWD	B5234T7	04/99 ⇨ 09/00
S70 2.3 T-5	B5234T3	01/97 ⇨ 11/00
S70 2.3 T5 AWD	B5234T4	07/97 ⇨ 09/00
S70 2.3 T5-R AWD	B5234T2	11/96 ⇨ 09/98
S70 2.3 Turbo	B5234FT+	01/97 ⇨ 11/00
S70 2.4	B5254S	06/98 ⇨ 11/00
S70 2.4 AWD	B5252FS	11/96 ⇨ 05/99
S70 2.4 Bifuel	GB5252S	10/98 ⇨ 11/00
S70 2.4 T5 AWD	B5254T	11/96 ⇨ 04/99
S70 2.4 Turbo	B5254T	01/97 ⇨ 11/00
S70 2.5 20V	B5254FS	01/97 ⇨ 12/98
S70 2.5 Bifuel	GB5252S2	01/99 ⇨ 12/99
V70 I 2.0	B5202FS, B5202S, B5204T2	12/95 ⇨ 03/00
V70 I 2.0 Turbo	B5204T3	11/96 ⇨ 12/00
V70 I 2.0 Turbo AWD	B5204T3	11/96 ⇨ 12/00
V70 I 2.3	B5234FS	01/97 ⇨ 07/99
V70 I 2.3 AWD	B5234T3, B5234T7	04/97 ⇨ 09/98
V70 I 2.3 T AWD	B5234FT+, B5234T4, B5234T6	04/97 ⇨ 12/98
V70 I 2.3 T-5	B5234T3	11/96 ⇨ 12/00
V70 I 2.3 T-5 AWD	B5234T3	01/97 ⇨ 12/00
V70 I 2.3 Turbo	B5234FT+, B5234T2, B5234T4	12/95 ⇨ 12/98
V70 I 2.4	B5252FS, B5254S	12/95 ⇨ 12/99
V70 I 2.4 Bifuel	GB5252S	05/98 ⇨ 12/99
V70 I 2.4 Turbo AWD	B5254T	04/96 ⇨ 12/00
V70 I 2.5	B5252FS	01/97 ⇨ 03/00
V70 I 2.5 20V	B5254FS	01/97 ⇨ 12/99
V70 I 2.5 Bifuel	GB5252S2	01/99 ⇨ 12/99

FACET 3.7573/48RS — 1

ROTORS

Adatt./Suitable: ***BOSCH***

BOSCH
1 234 332 421
VW
021 905 225 B

[03] Supplied until depletion
- Fornibile fino ad esaurimento delle scorte
- Fourni jusqu'à épuisement du stock
- Lieferbar solange vorrat reicht
- Suministrado hasta el stock termina

[212] Resistance Rotor [Ohm] 1000
- Rotore resistenza [Ohm] 1000
- Résitance roteur [ohm] 1000
- Widerstand-Rotor [Ohm] 1000
- Resistencia rotor [ohm] 1000

VW		
CORRADO 2.9 VR6	ABV	08/91 ⇨ 12/95
GOLF III 2.8 VR6	AAA	01/92 ⇨ 09/97
PASSAT III 2.8 VR6	AAA	06/91 ⇨ 05/97
VENTO 2.8 VR6	AAA	01/92 ⇨ 09/98

FACET 3.7573/49RS — 1

ROTORS

Adatt./Suitable: ***BOSCH***

BOSCH
1 234 332 426
VW
021 905 225 C

[212] Resistance Rotor [Ohm] 1000
- Rotore resistenza [Ohm] 1000
- Résitance roteur [ohm] 1000
- Widerstand-Rotor [Ohm] 1000
- Resistencia rotor [ohm] 1000

VW		
CORRADO 2.9 VR6	ABV	08/91 ⇨ 12/95
GOLF III 2.8 VR6	AAA	01/92 ⇨ 09/97
PASSAT III 2.8 VR6	AAA	06/91 ⇨ 05/97
VENTO 2.8 VR6	AAA	01/92 ⇨ 09/98

FACET 3.7575/1RS

1

ROTORS

Adatt./Suitable: ***CAJAVEC***

CAJAVEC
5247098
YUGO
46600871
ZASTAVA
46600871

[212] **Resistance Rotor [Ohm] 5000**
- Rotore resistenza [Ohm] 5000
- Résitance roteur [ohm] 5000
- Widerstand-Rotor [Ohm] 5000
- Resistencia rotor [ohm] 5000

ZASTAVA		
101 1.1	128A.000	06/73 ⇨ 01/90
YUGO 0.9	9A	04/80 ⇨ 06/92

FACET 3.7579

3

ROTORS

Adatt./Suitable: ***CHRYSLER***

CHRYSLER
5226535

[03] **Supplied until depletion**
- Fornibile fino ad esaurimento delle scorte
- Fourni jusqu'à épuisement du stock
- Lieferbar solange vorrat reicht
- Suministrado hasta el stock termina

CHRYSLER		
LE BARON 2.2 i	--	10/83 ⇨ 12/94
LE BARON 2.2 i Turbo	--, EDG, EDR	10/83 ⇨ 01/91
LE BARON 2.5 i	EDM	09/86 ⇨ 12/94
LE BARON 2.5 i Turbo	EDT	01/89 ⇨ 12/94
VOYAGER I 2.5 i [USA]	EDM	10/84 ⇨ 07/90
VOYAGER 2.5 i	K, K00	08/90 ⇨ 09/95

FACET 3.7590

1

ROTORS

Adatt./Suitable: ***DELCO REMY***

DELCO REMY
1 847 291
1 849 955
1 883 500
1 905 590
1 909 590
8 204 45
GENERAL MOTORS
82 044 5
Motorcraft
ADR 5004

[03] **Supplied until depletion**
- Fornibile fino ad esaurimento delle scorte
- Fourni jusqu'à épuisement du stock
- Lieferbar solange vorrat reicht
- Suministrado hasta el stock termina

BEDFORD		
CHEVANNE 1.3	13D, LW4	06/76 ⇨ 12/82
BOND		
EQUIPE 2.0 GT	--	01/68 ⇨ 12/71
TALBOT		
AVENGER 1.3	--	02/70 ⇨ 07/81
AVENGER 1.6	--	02/70 ⇨ 07/81

TRIUMPH		
GT6 MK I	KE1L	01/66 ⇨ 12/68
GT6 MK II	KE1L, KE2L	12/68 ⇨ 12/70
GT6 MK III	KE2L	12/71 ⇨ 12/73
SPITFIRE 1.2	AJM	12/64 ⇨ 01/67
SPITFIRE 1.2 MK I	AJM	10/62 ⇨ 12/65
SPITFIRE 1.3	--, FM3	02/67 ⇨ 12/72
SPITFIRE 1.5	--	12/72 ⇨ 11/74
VITESSE 1.6	--	01/62 ⇨ 12/67
VITESSE 2.0	--, HB1HE, HB1LE	12/65 ⇨ 12/71
VAUXHALL		
CAVALIER 1.3	--, LW4	08/77 ⇨ 01/81
CAVALIER 1300	13N	08/77 ⇨ 08/81
CAVALIER CC 1.3	--, LW4	08/75 ⇨ 08/81
CHEVETTE 1.2	13N	09/76 ⇨ 12/85
CHEVETTE 1300	13N, 13S	09/74 ⇨ 12/85
CRESTA 2.7	--	01/64 ⇨ 10/72
CRESTA 3.3	--	01/64 ⇨ 10/72
FIRENZA 1300	--	01/71 ⇨ 10/73
VELOX 2.7	--	03/64 ⇨ 10/72
VELOX 3.3	--	09/64 ⇨ 07/65
VENTORA 3300	--	03/69 ⇨ 10/76
VICTOR 3000	--	03/68 ⇨ 09/72
VISCOUNT 3300	--	01/66 ⇨ 10/72
VIVA 1100	--	01/63 ⇨ 09/71
VIVA 1100 SL90	--	01/65 ⇨ 10/70
VIVA 1256	--	10/71 ⇨ 10/75
VIVA 1256 E	--	10/71 ⇨ 10/75
VIVA 1300	--	10/75 ⇨ 10/79

FACET 3.7593

1

ROTORS

Adatt./Suitable: ***DELCO REMY***

BOSCH
1 234 332 800
DELCO REMY
0 347 0056
1 212 208
3 470 056
GENERAL MOTORS
03 470 056
3 470 056
OPEL
12 12 208

[00] **Eliminated on 26-10-2021. Please verify the availability through our local distributors**
- Eliminato il 26-10-2021. Verificare la disponibilità presso i nostri distributori
- Eliminé le 26-10-2021. Verifier la disponibilité auprès de nos distributeurs sur place
- Am 26-10-2021 gestrichen. Evtl. Verfügbarkeit bitte bei unseren Händlern prüfen
- Eliminado en fecha 26-10-2021. Verificar la disponibilidad a través de nuestros distribuidores locales

OPEL		
KADETT B 1.1	11N	08/71 ⇨ 08/73
KADETT D 1.0	10N	09/79 ⇨ 08/82

FACET 3.7593RS

1

ROTORS

Adatt./Suitable: ***DELCO REMY***

GENERAL MOTORS
3 470 093
3 470 391
OPEL
17 84 228
17 84 231

[03] **Supplied until depletion**
- Fornibile fino ad esaurimento delle scorte
- Fourni jusqu'à épuisement du stock
- Lieferbar solange vorrat reicht
- Suministrado hasta el stock termina

[212] **Resistance Rotor [Ohm] 5000**
- Rotore resistenza [Ohm] 5000
- Résitance roteur [ohm] 5000
- Widerstand-Rotor [Ohm] 5000
- Resistencia rotor [ohm] 5000

OPEL		
ASCONA B 2.0 N	20N	08/77 ⇨ 08/81
CORSA A 1.0	10S	09/82 ⇨ 03/93
KADETT C 1.2	12N	05/75 ⇨ 07/79
KADETT C 1.2 S	12S	08/73 ⇨ 07/79
KADETT C 1.6 S	16S	09/76 ⇨ 07/79
KADETT E 1.2	12SC	09/84 ⇨ 07/86
MANTA B 1.2 S	12S	09/75 ⇨ 02/79
MANTA B 1.9 N	19N	08/76 ⇨ 12/81
REKORD D 1.7	17N	03/75 ⇨ 08/77
VOLVO		
340-360 1.4	B14.3E, B14.4S	08/82 ⇨ 12/88

FACET 3.7595RS

1

ROTORS

Adatt./Suitable: ***DELCO REMY***

DELCO REMY
0 348 6037
3 486 037
GENERAL MOTORS
90 010 695
OPEL
17 84 234
VOLVO
3277855
32778557

[03] **Supplied until depletion**
- Fornibile fino ad esaurimento delle scorte
- Fourni jusqu'à épuisement du stock
- Lieferbar solange vorrat reicht
- Suministrado hasta el stock termina

[212] **Resistance Rotor [Ohm] 5000**
- Rotore resistenza [Ohm] 5000
- Résitance roteur [ohm] 5000
- Widerstand-Rotor [Ohm] 5000
- Resistencia rotor [ohm] 5000

OPEL		
CORSA A 1.0	10S	09/82 ⇨ 03/93
KADETT E 1.2	12SC	09/84 ⇨ 07/86

FACET 3.7596 — 3,5

ROTORS

Adatt./Suitable: ***DELCO REMY***

BOSCH
1 234 332 861
DELCO REMY
1 936 109
1 986 109
GENERAL MOTORS
01 986 109
1 986 109
OPEL
12 12 218

OPEL		
ASCONA C 1.3 N	13N	09/81 ⇨ 08/86
CORSA A 1.2	12S, 12ST	09/82 ⇨ 08/90
CORSA A 1.2 N	12NV	01/90 ⇨ 03/93
CORSA A 1.2 S	12S, 12ST	09/82 ⇨ 03/93
CORSA A 1.3	13SB	02/86 ⇨ 04/89
CORSA A 1.3 GL	13S	09/82 ⇨ 03/93
CORSA A 1.3 S	13SB	09/82 ⇨ 10/89
KADETT D 1.2	12ST	08/82 ⇨ 08/84
KADETT E 1.3 N	13N, 13NB	09/84 ⇨ 08/91
KADETT E 1.3 S	13S	09/84 ⇨ 02/93
MANTA B 1.3 S	13S	08/81 ⇨ 08/86

FACET 3.7597 — 3,5

ROTORS

Adatt./Suitable: ***DELCO REMY***

DELCO REMY
1 988 515
D-436
GENERAL MOTORS
01 988 515
1 988 515
OPEL
12 12 221

[00] **Eliminated on 17-05-2021. Please verify the availability through our local distributors**
- Eliminato il 17-05-2021. Verificare la disponibilità presso i nostri distributori
- Eliminé le 17-05-2021. Verifier la disponibilité auprès de nos distributeurs sur place
- Am 17-05-2021 gestrichen. Evtl. Verfügbarkeit bitte bei unseren Händlern prüfen
- Eliminado en fecha 17-05-2021. Verificar la disponibilidad a través de nuestros distribuidores locales

OPEL		
ASCONA C 1.6	16SV	09/86 ⇨ 08/88
ASCONA C 1.6 i Cat	C16LZ, C16NZ	09/86 ⇨ 08/88

FACET 3.7598 — 3,5

ROTORS

Adatt./Suitable: ***DELCO REMY***

BOSCH
F 005 X04 443
F 005 X04 444
CHEVROLET
10495411
DAEWOO
10495411
DELCO REMY
1 046 7546
1 049 5408
1 049 5411
D-444
HOLDEN
10467546
10495411
ISUZU
8-10495411-0

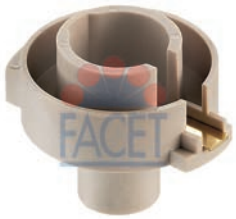

DAEWOO		
ARANOS 1.8	Y18L	01/95 ⇨ 11/97
ARANOS 2.0	Y20L	01/95 ⇨ 11/97
ESPERO 1.8	C18LE	02/95 ⇨ 06/99
ESPERO 2.0	C20LE	02/95 ⇨ 06/99
NEXIA 1.5	G15MF	02/95 ⇨ 08/97
HOLDEN		
ASTRA_LD 1.6i	16LE	07/87 ⇨ 07/89
ASTRA_LD 1.8i Hatchback	18LE	07/87 ⇨ 07/89
ASTRA_LD 1.8i Sedan	18LE	07/87 ⇨ 07/89
CAMIRA 1.8 SPFi	6TZ204XS85K01	02/86 ⇨ 03/87
CAMIRA 2.0 i	C20JE	04/87 ⇨ 07/89
ISUZU		
IMPULSE 1.6i [USA]	RLK	01/90 ⇨
IMPULSE 1.8i [USA]	RLX	01/91 ⇨
STYLUS 1.6i DOHC [USA]	RLK	01/90 ⇨ 12/91
STYLUS 1.6i SOHC [USA]	RLR	01/90 ⇨
STYLUS 1.8i DOHC [USA]	RLX	01/91 ⇨

FACET 3.7600 — 3,5

ROTORS

Adatt./Suitable: ***DELCO REMY***

GENERAL MOTORS
10 469 006
OPEL
12 12 203

OPEL		
ASTRA F 1.6 i	C16NZ	09/91 ⇨ 09/98
CORSA A 1.2	12S, 12ST	09/82 ⇨ 08/90
CORSA A 1.2 N	12NV	01/90 ⇨ 03/93
CORSA A 1.2 S	12S, 12ST	09/82 ⇨ 03/93
CORSA A 1.3	13NB	09/85 ⇨ 10/89
KADETT E 1.3 i Cat	C13N	09/85 ⇨ 08/91
KADETT E 1.3 N	13N, 13NB	09/84 ⇨ 08/91
KADETT E 1.3 S	13S	09/84 ⇨ 02/93
KADETT E 1.6	16SV	09/86 ⇨ 12/91
KADETT E 1.6 i	16SV, C16NZ, E16NZ	09/86 ⇨ 07/94
KADETT E 1.6 i Cat	C16LZ, C16NZ	09/86 ⇨ 02/93
KADETT E 1.6 S	16SV	09/86 ⇨ 08/91
VECTRA A 1.6 i	C16NZ, E16NZ, X16SZ	09/88 ⇨ 11/95
VECTRA A 1.6 i Cat	C16NZ	09/88 ⇨ 11/95
VAUXHALL		
ASTRA III 1.6 i	C16NZ	09/91 ⇨ 12/98
VAUXHALL		
ASTRAVAN I 1.6 i	C16NZ	10/91 ⇨ 08/98

FACET 3.7614 — 1

ROTORS

Adatt./Suitable: ***DENSO***

BOSCH
1 234 332 827
1 234 332 828
1 987 234 001
1 987 234 003
1 987 234 021
1 987 234 901
F 005 X04 414
DAIHATSU
19102-26150-000
19102-33012-000
19102-87204-000
19102-87701-000
DENSO
029180-0240
029180-0241
029180-0340
029180-0430
029180-0580
FIAT
553221400
6553221400
GENERAL MOTORS
7 992 988
9 977 032
94 206 140
94 216 729
94 221 206
HOLDEN
8942212060
INNOCENTI
6553221400
ISUZU
8-94206140-0
8-94216729-0
8-94221206-0
8-94221-206-00
894338910
896052016
8-96055178-0
9-42212-06
MITSUBISHI
MD604338
Motorcraft
ADR 5031
SUBARU
39101-4302
49101-3202
49101-7102
SUZUKI
33310-73010
33310-73010-000
33310-77090
33310-77090-000
TOYOTA
19102-10020
19102-26150
19102-26151
19102-33011
19102-33012
19102-38160
VW
J19 102 261 51

[03] **Supplied until depletion**
- Fornibile fino ad esaurimento delle scorte
- Fourni jusqu'à épuisement du stock
- Lieferbar solange vorrat reicht
- Suministrado hasta el stock termina

[202] **without resistance**
- senza resistenza
- sans résistance
- ohne Widerstand
- sin resistencia

DAIHATSU		
850 0.8	--	07/86 ⇨ 12/89
1000 1.0	CB10	07/86 ⇨ 12/89
CHARADE III 1.0	CB23, CB22	03/87 ⇨ 02/93
CUORE II 0.8	ED10	09/85 ⇨ 12/90
CUORE II 0.8 4WD	ED10	09/86 ⇨ 10/88
DOMINO 0.8	ED	08/85 ⇨ 07/90
FEROZA 1.6i	--	01/84 ⇨ 12/89
HIJET I 1.0	CB	06/86 ⇨ 12/89
MIRA 847	--	01/87 ⇨
FORD AUSTRALIA		
HUSKY 1.8	ZA	01/85 ⇨
HOLDEN		
JACKAROO_UBS 2.2 4x4	4ZD1	03/87 ⇨ 10/88
RODEO_KB 2.3	2.25	03/87 ⇨ 07/88
RODEO_KB 2.3 4x4	2.25	03/87 ⇨ 07/88
RODEO_TF 2.2	4ZD1	03/91 ⇨ 08/93
SHUTTLE_WFR 2.0	4ZC1	06/86 ⇨ 06/89
INNOCENTI		
500 L; LS	--	⇨ 12/86
SMALL 990	--	07/90 ⇨ 12/92
SUBARU		
E-SERIES 1.0	--	01/87 ⇨ 12/88

SUBARU		
L-SERIES 1.3	--	01/87 ⇨ 12/91
L-SERIES 1.8i	--	01/86 ⇨ 12/91
SUZUKI		
ALTO I 0.8	F8A, F8B	06/82 ⇨ 08/84
SJ410 1.0	F10A	09/81 ⇨ 07/91
TOYOTA		
DYNA 1.6	1Y	05/85 ⇨ 08/87
DYNA 1.8	2Y	05/95 ⇨ 08/01
DYNA 100 1.8	2Y	08/85 ⇨ 04/95
DYNA 150 1.8	2Y	08/85 ⇨ 08/86
DYNA 150 2.0	3Y	08/85 ⇨ 08/88
HIACE III 2.0	3Y	12/82 ⇨ 08/89
HIACE III 2.0 4WD	3Y	08/87 ⇨ 07/89
HIACE III 2.2	4Y	09/87 ⇨ 08/89
HIACE III 2.2 4WD	4Y	08/87 ⇨ 08/89
HILUX IV 1.8	2Y	08/83 ⇨ 03/89
HILUX IV 2.2	4Y	08/83 ⇨ 12/89
HILUX IV 2.2 4WD	4Y	11/85 ⇨ 12/89
HILUX V 1.8	2Y	09/88 ⇨ 06/98
LITEACE 1.5	5K	10/85 ⇨ 01/95
STARLET 1.0	1E	12/89 ⇨ 12/92
STARLET 1.3 [USA]	4KE	01/82 ⇨ 12/84
STOUT 2.2	4Y	04/88 ⇨ 02/00
VW		
TARO 1.8	2Y	04/89 ⇨ 09/94
TARO 2.2	4Y	06/89 ⇨ 07/94
TARO 2.2 4x4	4Y	06/89 ⇨ 07/94

FACET 3.7627

1

ROTORS

Adatt./Suitable: ***DENSO***

BOSCH
1 987 234 025
F 005 X04 493

DAIHATSU
19102-38210-000

DENSO
029180-0660

GENERAL MOTORS
12 338 891
94 844 585
94 845 144

HOLDEN
1910202010
8942389820

ISUZU
8-94238982-0

LUV CHEVROLET
94220291
94238982

TOYOTA
19102-02010
19102-15021
19102-16040
19102-16060
19102-35160
19102-38210

VW
J19 102 160 60

[03] **Supplied until depletion**
- Fornibile fino ad esaurimento delle scorte
- Fourni jusqu'à épuisement du stock
- Lieferbar solange vorrat reicht
- Suministrado hasta el stock termina

HOLDEN		
PIAZZA_YB 2.0i Turbo	2LH.C.	04/86 ⇨ 12/87
TOYOTA		
CAMRY 1.8	1S	11/86 ⇨ 08/89
CARINA II 1.6	4A-LC	10/83 ⇨ 11/87
CELICA IV 1.6 GT	4A-GELC	08/87 ⇨ 08/89
CELICA IV 1.6 GT 16V	4A-GEL	09/85 ⇨ 08/89
CELICA IV 1.6 GTI 16V	4A-GEL	01/88 ⇨ 12/89
CELICA IV 2.0i [USA]	2SELC	01/85 ⇨ 12/86
COROLLA IV 1.8	3T-C	09/79 ⇨ 09/83
COROLLA V 1.6	4A-GELC	05/85 ⇨ 04/87
COROLLA V 1.6 16V	4A-GEC	12/85 ⇨ 04/87
COROLLA VI 1.6 GTi	4A-GE	08/87 ⇨ 10/94
DYNA 1.8	2Y	05/95 ⇨ 08/01
DYNA 2.0	3Y	05/95 ⇨ 10/01
DYNA 100 1.8	2Y	08/85 ⇨ 04/95
HILUX IV 1.8	2Y	08/83 ⇨ 03/89
HILUX IV 2.2	4Y	08/83 ⇨ 12/89
HILUX IV 2.2 4WD	4Y	11/85 ⇨ 12/89
HILUX V 1.8	2Y	09/88 ⇨ 06/98

TOYOTA		
LAND CRUISER 70 2.4	22R	11/84 ⇨ 05/93
LITEACE 2.2	4Y-EC	01/92 ⇨ 01/95
MODEL F 2.0	3Y	08/88 ⇨ 01/90
MODEL F 2.2	4Y-EC	08/85 ⇨ 01/90
TRUCK 2.4 i [USA]	22R	01/88 ⇨ 12/90
VAN 2.2 [USA]	4YEC	01/83 ⇨ 12/90
VW		
TARO 1.8	2Y	04/89 ⇨ 09/94
TARO 2.2	4Y	06/89 ⇨ 07/94
TARO 2.2 4x4	4Y	06/89 ⇨ 07/94

FACET 3.7628

1

ROTORS

Adatt./Suitable: ***DENSO***

BOSCH
1 987 234 041
F 005 X04 442

DAIHATSU
19102-87101-000
19102-87102-000

DENSO
029180-0920
029180-0921
029180-1310
029180-1391

GENERAL MOTORS
96 066 463

HOLDEN
3331082610
GD696

SUBARU
33310-71C30

SUZUKI
33310-63B10
33310-63B10-000
33310-71C30
33310-71C30-000
33310-82610
33310-82610-000

DAIHATSU		
APPLAUSE I 1.6 16V	HD, HD-E	06/89 ⇨ 07/97
APPLAUSE I 1.6 16V 4WD	HD-E	06/89 ⇨ 07/97
CHARADE III 1.0i	G102	01/88 ⇨
CHARADE III 1.3	HC-C	09/88 ⇨ 02/93
CHARADE III 1.3 i	HC-E	06/88 ⇨ 12/92
CHARADE III 1.3 i 4WD	HC-E	06/88 ⇨ 01/93
CHARADE III 1.3i [USA]	HC-E	01/89 ⇨
FEROZA 1.6 16V	HD-C	10/88 ⇨ 12/99
FEROZA 1.6 16V 4x4	HD-C	10/88 ⇨ 12/99
FEROZA 1.6 i 16V	HD-E	10/88 ⇨ 12/99
FEROZA 1.6 i 16V 4x4	HD-E	10/88 ⇨ 12/99
FEROZA 1.6i	--	01/90 ⇨
ROCKY 2.0i [USA]	--	01/89 ⇨
SPORTRACK 1.6 16v 4x4	HD-C	10/88 ⇨ 08/93
HOLDEN		
BARINA 1.3	G13A	08/86 ⇨ 12/89
BARINA 1.3 GL	G13A	02/85 ⇨ 08/86
SUBARU		
JUSTY II 1.3i	G13BA	05/96 ⇨ 09/00
SUZUKI		
ALTO IV 1.0	G10BB	09/94 ⇨ 06/02
ALTO V 1.0	G10BB	01/00 ⇨ 06/02
SWIFT I / II / III 1.3	G13A, G13B, G13BA	03/89 ⇨ 10/96
SWIFT I / II / III 1.3 4WD	G13A	03/89 ⇨ 12/91
SWIFT I / II / III 1.3 GTi SOHC	G13B	10/89 ⇨ 12/95
SWIFT I / II / III 1.3 i	G13BA	09/91 ⇨ 10/96
SWIFT I / II / III 1.3i SOHC [USA]	--	01/89 ⇨ 12/94
SWIFT I / II / III 1.6 i 16V	G16BA	08/92 ⇨ 10/96
SWIFT I / II / III 1.6 i 16V 4x4	G16BA	08/92 ⇨ 10/96
SA413 1.3	--	01/84 ⇨
SWIFT III 1.3 [USA]	--	06/95 ⇨ 05/01
SWIFT III 1.3 i	G13BA	06/96 ⇨ 03/01

FACET 3.7629

3

ROTORS

Adatt./Suitable: ***DENSO***

BOSCH
1 987 234 027
F 005 X04 495

DAIHATSU
19102-87703-000
19102-87705-000

DENSO
029180-0910
029180-0930
029180-1230

GENERAL MOTORS
94 404 559
94 847 241

HOLDEN
1910211010
1910211031
1910211370

ISUZU
8-94404559-0
8-94404559-9
8-94847241-0

SUBARU
22157-KA040

TOYOTA
19102-11010
19102-11030
19102-11031
19102-11050
19102-11370
19102-87705

DAIHATSU		
CHARADE III 1.0	CB90	11/90 ⇨ 12/92
CHARADE III 1.0 GTi	CB80T	03/87 ⇨ 12/92
CHARADE III 1.0i [USA]	CB	01/89 ⇨
CHARADE III 1.0i 12v GTti	CB70	11/90 ⇨ 02/93
HOLDEN		
APOLLO 2.0	3S-FC	08/89 ⇨ 08/91
APOLLO 2.0 i	3S-FE	08/89 ⇨ 02/93
APOLLO 2.2 i	08GR-FXS	03/93 ⇨ 05/97
NOVA_LE 1.4 Hatchback	6AFC	07/89 ⇨ 07/91
NOVA_LE 1.6 Hatchback	4AFC	07/89 ⇨ 07/91
NOVA_LE 1.6 Sedan	4AFC	07/89 ⇨ 07/91
NOVA_LF 1.6i Hatchback	4AFE	08/91 ⇨ 03/93
NOVA_LF 1.6i Sedan	4AFE	08/91 ⇨ 03/93
NOVA_LF 1.8i Hatchback	7AFE	08/91 ⇨ 03/93
NOVA_LF 1.8i Sedan	7AFE	08/91 ⇨ 03/93
NOVA_LG 1.6i Hatchback	4AFE	09/94 ⇨ 09/96
NOVA_LG 1.6i Sedan	4AFE	09/94 ⇨ 09/96
NOVA_LG 1.8i Hatchback	7AFE	09/94 ⇨ 09/96
NOVA_LG 1.8i Sedan	7AFE	09/94 ⇨ 09/96
SUBARU		
JUSTY 1.2i EMPI [USA]	--	01/91 ⇨
TRENDY 1.0	EF10	08/86 ⇨ 05/95
TOYOTA		
AVENSIS I 1.6	4A-FE	09/97 ⇨ 10/00
CAMRY 2.0	3S-FE	03/83 ⇨ 02/93
CAMRY 2.0 4WD	3S-FE	03/83 ⇨ 06/91
CAMRY 2.2	5S-FE	06/91 ⇨ 07/96
CARINA II 1.6	4A-F, 4A-FE	12/87 ⇨ 03/92
CARINA II 1.6 4WD	4A-FE	06/88 ⇨ 03/92
CARINA II 2.0	3S-FE	12/87 ⇨ 04/92
CARINA II 2.0 GLI	3S-FE	12/87 ⇨ 03/92
CARINA E 1.6	4A-FE	04/92 ⇨ 09/97
CARINA E 1.6 16V	4A-FE	12/94 ⇨ 09/97
CARINA E 1.6 GLI	4A-FE	04/92 ⇨ 09/97
CARINA E 1.6 i	4A-FE	02/95 ⇨ 09/97
CARINA E 2.0	3S-FE	01/93 ⇨ 09/97
CARINA E 2.0 GLI	3S-FE	04/92 ⇨ 09/97
CARINA E 2.0 GTi	3S-GE	04/92 ⇨ 12/95
CARINA E 2.0 GTi 16V	3S-GE	03/94 ⇨ 09/97
CARINA E 2.0 i	3S-FE	12/92 ⇨ 09/97
CELICA IV 1.6	4A-L	04/86 ⇨ 08/89
CELICA IV 2.0i [USA]	3S-FE	01/85 ⇨ 12/87
CELICA V 1.6	4A-FE	09/89 ⇨ 12/93
CELICA V 1.6 16V [USA] [CAN]	4A-FE	09/89 ⇨ 09/93
CELICA V 2.2	5S-FE	10/89 ⇨ 12/94
COROLLA VI 1.3	2E	05/87 ⇨ 06/92
COROLLA VI 1.3 i	2E, 2E-E	08/87 ⇨ 06/92
COROLLA VI 1.6	4A-F, 4A-FE	05/87 ⇨ 12/92
COROLLA VI 1.6 4WD	4A-F	08/87 ⇨ 08/89

TOYOTA		
COROLLA VI 1.6 GL 4WD	4A-F	10/87 ⇨ 08/90
COROLLA VI 1.6 i	4A-FE	05/87 ⇨ 05/92
COROLLA VI 1.6 i 4WD	4A-FE	10/87 ⇨ 08/90
COROLLA VI 1.6 XL	4A-F	09/89 ⇨ 04/92
COROLLA VI 1.6 XLI	4A-FE	11/89 ⇨ 06/92
COROLLA VII 1.3 12V	2E	07/92 ⇨ 04/97
COROLLA VII 1.3 XLI	4E-FE	07/92 ⇨ 04/97
COROLLA VII 1.3 XLI 16V	4E-FE	07/92 ⇨ 09/95
COROLLA VII 1.6 GLI	4A-FE	07/92 ⇨ 04/97
COROLLA VII 1.6 Si	4A-FE	07/92 ⇨ 04/97
COROLLA VIII 1.3	2E	05/97 ⇨ 10/01
COROLLA VIII 1.6	4A-FE	04/97 ⇨ 02/00
COROLLA VIII 1.6 Aut.	4A-FE	04/97 ⇨ 02/00
FUNCRUISER 2.0 i 16V 4WD	3SFE	04/94 ⇨
MR 2 II 2.2 16V	5S-FE	01/90 ⇨ 06/95
HIACE IV 2.0	1RZ	08/89 ⇨ 08/04
HIACE IV 2.4	5YTD050W07	08/89 ⇨ 08/03
HIACE IV 2.4 4WD	5YTD050W07	08/89 ⇨ 08/95
CELICA VI 2.2 GT	5S-FE	11/93 ⇨ 08/99
MR 2 I 1.6 16V	4A-GELC	11/84 ⇨ 06/90
MR 2 I 1.6 Supercharged	4A-GZE	08/86 ⇨ 12/89
PASEO 1.5	5E-FE	06/90 ⇨ 08/95
RAV 4 I 2.0	3S-FE	06/97 ⇨ 09/99
RAV 4 I 2.0 4WD	3S-FE	01/94 ⇨ 06/00
STARLET 1.3	4E-FE	01/96 ⇨ 07/99
STARLET 1.3 12V	2E, 2E-E	12/89 ⇨ 12/92
STARLET 1.3 12V Cat	2E-E	12/89 ⇨ 03/96
STARLET 1.3 XL	2E	12/89 ⇨ 12/91
TERCEL 1.5	--	01/86 ⇨
TERCEL 1.5 [USA]	3E	01/86 ⇨ 12/90
TERCEL 1.5 i [USA]	3EE	01/89 ⇨

FACET 3.7630

1

ROTORS

Adatt./Suitable: ***DENSO***

DAIHATSU
19102-87206-000
19102-87704-000

DENSO
029180-0990
029180-1130
029180-1260

GENERAL MOTORS
91 125 557
94 338 910
96 052 016
96 055 178

HOLDEN
3331082010
8943389100

ISUZU
8-94338910-0

MARUTI
33310-82110

MITSUBISHI
MD620555

OPEL
42 91 891
43 13 484

PIAGGIO
19102-87704-000

SUBARU
22157-KA020

SUZUKI
33310-82010
33310-82010-000
33310-82110
33310-82110-000

TOYOTA
19102-73060
19102-75010

DAIHATSU		
850 0.8	--	07/86 ⇨ 12/89
1000 1.0	CB10	07/86 ⇨ 12/89
CHARADE III 1.0	CB23, CB22	03/87 ⇨ 02/93
CUORE II 0.8	ED10	09/85 ⇨ 12/90
CUORE II 0.8 4WD	ED10	09/86 ⇨ 10/88
DOMINO 0.8	ED	08/85 ⇨ 07/90
HOLDEN		
DROVER QB 1.3	G13A	02/85 ⇨ 12/87
GEMINI_RB 1.5	4XC1	04/85 ⇨ 06/87
SCURRY_NB 1.0	F10A	10/85 ⇨ 05/86
HOLDEN		
SHUTTLE_WFR 2.0	4ZC1	06/86 ⇨ 06/89
MARUTI		
800 0.8	F8B	01/91 ⇨ 12/06
MITSUBISHI		
VALLEY 2.0	4G63-T	09/92 ⇨ 10/94
OPEL		
MIDI 2.0 i	20PET	09/92 ⇨ 08/94
MIDI 2.0 i 4x4	20PET	09/92 ⇨ 08/94
PIAGGIO		
PORTER 1.0	CB41	02/93 ⇨ 06/94
SUBARU		
E-SERIES 1.0	--	01/88 ⇨ 12/92
E-SERIES 1.2	--	01/87 ⇨ 12/92
L-SERIES 1.8	--	01/86 ⇨ 12/91
SUZUKI		
SWIFT I / II / III 1.0	G10A	03/89 ⇨ 05/01
SWIFT I / II / III 1.0 i	G10A	03/89 ⇨ 12/91
SWIFT I / II 1.0	G10, G10A	10/83 ⇨ 03/89
SAMURAI 1.3 Trazione integrale	G13A	11/88 ⇨ 12/04
SIDEKICK 1.6i [USA]	--	01/89 ⇨ 12/91
SJ413 1.3	G13A	09/84 ⇨ 08/90
SUPER CARRY 1.0	F10A	10/85 ⇨ 03/99
VITARA I 1.6 8V	--	01/90 ⇨ 12/98
TOYOTA		
DYNA 1.8	2Y	05/95 ⇨ 08/01
DYNA 100 1.8	2Y	08/85 ⇨ 04/95
HILUX IV 1.8	2Y	08/83 ⇨ 03/89
HILUX IV 2.2	4Y	08/83 ⇨ 12/89
HILUX IV 2.2 4WD	4Y	11/85 ⇨ 12/89
HILUX V 1.8	2Y	09/88 ⇨ 06/98
STOUT 2.2	4Y	04/88 ⇨ 02/00

FACET 3.7634

1

ROTORS

Adatt./Suitable: ***DENSO***

DAIHATSU
19102-87207-000

DENSO
029180-1280
029180-1300

FIAT
6553206400

GENERAL MOTORS
96 061 556

INNOCENTI
6553206400

SUZUKI
33310-60B50
33310-60B50-000

[03] **Supplied until depletion**
- Fornibile fino ad esaurimento delle scorte
- Fourni jusqu'à épuisement du stock
- Lieferbar solange vorrat reicht
- Suministrado hasta el stock termina

INNOCENTI		
SMALL 500	--	07/90 ⇨ 12/92
SMALL 500 Cat.	--	07/90 ⇨ 12/92
SUZUKI		
SWIFT I / II / III 1.0 i	G10	03/89 ⇨ 12/05
WAGON R III 1.0	Z10XEP	06/04 ⇨ 08/05
WAGON R+ II 1.0	K10A	08/00 ⇨ 07/03
WAGON R+ II 1.0 XT Plus	--	08/00 ⇨ 07/01

FACET 3.7636

3,5

ROTORS

Adatt./Suitable: ***DENSO***

BOSCH
1 987 234 065

SUZUKI
33310-80C10
33310-80C10-000

TOYOTA
19102-02030
19102-74040

SUZUKI		
ALTO IV 1.0	G10BB	09/94 ⇨ 06/02
ALTO V 1.0	G10BB	01/00 ⇨ 06/02
SAMURAI 1.3	G13BA	11/88 ⇨ 03/98
SAMURAI 1.3 Trazione integrale	G13A, G13BA	01/00 ⇨ 12/04
TOYOTA		
CARINA E 1.6	4A-FE	04/92 ⇨ 09/97
CARINA E 1.6 16V	4A-FE	12/94 ⇨ 09/97
CARINA E 1.6 GLI	4A-FE	04/92 ⇨ 09/97
CARINA E 1.6 i	4A-FE	02/95 ⇨ 09/97
CARINA E 1.8	7A-FE	04/92 ⇨ 09/97
CARINA E 1.8 i	7A-FE	02/95 ⇨ 09/97
CARINA E 1.8 i 16V	7A-FE	01/95 ⇨ 09/97
CELICA V 2.0	3S-GE	09/89 ⇨ 01/94
CELICA V 2.0 4WD	3S-GTE	10/89 ⇨ 01/94
CELICA V 2.0 GTi	3S-GE	10/89 ⇨ 11/93
CELICA V 2.2	5S-FE	10/89 ⇨ 12/94
CELICA VI 2.0 GTi	3S-GE	08/94 ⇨ 08/99
CELICA VI 2.0 i 16V	3S-GE	11/93 ⇨ 11/99
CELICA VI 2.0 i Turbo 4WD	3S-GTE	02/94 ⇨ 11/99
CELICA VI 2.2 GT	5S-FE	11/93 ⇨ 08/99
MR 2 II 2.0	3S-FE	12/89 ⇨ 08/92
MR 2 II 2.0 16V	3S-GE	12/89 ⇨ 09/99
MR 2 II 2.0 Turbo	3S-GTE	12/89 ⇨ 07/99
PREVIA I 2.4	2TZ-FE	05/90 ⇨ 08/00
PREVIA I 2.4 4WD	2TZ-FE, 2TZ-FZE	01/90 ⇨ 12/99

FACET 3.7680

3

ROTORS

Adatt./Suitable: ***DUCELLIER***

[00] **Eliminated on 29-07-2019. Please verify the availability through our local distributors**
- Eliminato il 29-07-2019. Verificare la disponibilità presso i nostri distributori
- Eliminé le 29-07-2019. Verifier la disponibilité auprès de nos distributeurs sur place
- Am 29-07-2019 gestrichen. Evtl. Verfügbarkeit bitte bei unseren Händlern prüfen
- Eliminado en fecha 29-07-2019. Verificar la disponibilidad a través de nuestros distribuidores locales

[202] **without resistance**
- senza resistenza
- sans résistance
- ohne Widerstand
- sin resistencia

FACET 3.7681

1

ROTORS

Adatt./Suitable: ***DUCELLIER***

BOSCH
1 234 332 803
DUCELLIER
72 192
GENERAL MOTORS
7 992 292
RENAULT
08 54 720 000
77 01 019 885

[03] **Supplied until depletion**
- Fornibile fino ad esaurimento delle scorte
- Fourni jusqu'à épuisement du stock
- Lieferbar solange vorrat reicht
- Suministrado hasta el stock termina

RENAULT		
4 0.8	80001	09/71 ⇨ 12/88

FACET 3.7683RS

3

ROTORS

Adatt./Suitable: ***DUCELLIER***

ALFA ROMEO
116 55 05 011 03/01
9916117
CITROËN
54 283 90
54 283 90P
95 539 596
DUCELLIER
18 137
79 432
450 002
450 009
661 156
FIAT
9916117
9924733
9936866
9937480
GENERAL MOTORS
7 992 892
LANCIA
9924733
PEUGEOT
5937 17
RENAULT
08 55 054 100
SEAT
000 389 842 4
000 993 686 6
SE 127914.004B
TALBOT
9611 6
VOLVO
284509
2845097
3100770
31007701

[212] **Resistance Rotor [Ohm] 5000**
- Rotore resistenza [Ohm] 5000
- Résitance roteur [ohm] 5000
- Widerstand-Rotor [Ohm] 5000
- Resistencia rotor [ohm] 5000

CITROËN		
CX I 2400 GTi	M23-622	06/77 ⇨ 06/83
FIAT		
124 1200	124A.000	07/66 ⇨ 10/73
124 1400 Special	124B2.000	12/68 ⇨ 12/72
124 1600 Special T	132AC.000	01/73 ⇨ 07/75
127 0.9	100GL.048	06/71 ⇨ 05/83
128 1.1	128A.000	03/69 ⇨ 12/84
131 1.3 Mirafiori	131A6.000	10/74 ⇨ 09/81
850 0.8	100G.000	07/64 ⇨ 10/72
FIORINO I 900	100GL.000	10/77 ⇨ 10/86
PANDA I 750	141B.000	01/86 ⇨ 01/95
PANDA I 800	100GL6.000	02/81 ⇨ 12/85
PANDA I 900	100GL3.000	10/80 ⇨ 06/94
PANDA I 900 CL	146A.048	01/86 ⇨ 04/91
FIAT		
REGATA 1.1 60 , 60 L	138B.000	10/83 ⇨ 08/86
REGATA 1.6	149A.000	10/84 ⇨ 06/89
REGATA 70 1.3	138B2.000, 149A3.000	09/83 ⇨ 07/89
REGATA 85 1.6	149A.000	10/83 ⇨ 06/90
RITMO I 1.1	146A4.048	04/85 ⇨ 12/87
RITMO I 1.3	149A3.000	11/83 ⇨ 08/85
RITMO II 75 1.5	138A2.000	09/85 ⇨ 12/88
UNO 45 0.9	146A.000, 146A1.000	03/83 ⇨ 07/96
UNO 45 0.9 Trend	146A.048	09/89 ⇨ 09/92
UNO 60 1.1 SX	--	01/83 ⇨ 12/85
LANCIA		
A 112 0.9 Junior	A112A5.000	03/81 ⇨ 06/86
SEAT		
FURA 0.9	100GL3000	01/82 ⇨ 06/86
PANDA 34 850	--	01/80 ⇨ 12/83
PANDA 35 850	--	01/80 ⇨ 12/83

FACET 3.7688

1

ROTORS

Adatt./Suitable: ***DUCELLIER***

CHRYSLER
83 300 127
T1020357
T1407311
CITROËN
79 015 937 22
DUCELLIER
610 891
661 371
664 225
GENERAL MOTORS
93 150 104
PEUGEOT
5937 09
5937 22
RENAULT
77 01 020 357
TALBOT
9405 93 7228

[03] **Supplied until depletion**
- Fornibile fino ad esaurimento delle scorte
- Fourni jusqu'à épuisement du stock
- Lieferbar solange vorrat reicht
- Suministrado hasta el stock termina

[202] **without resistance**
- senza resistenza
- sans résistance
- ohne Widerstand
- sin resistencia

CITROËN		
AXEL 11	G11/631	01/84 ⇨ 03/91
PEUGEOT		
104 0.9	108(XV5)	10/79 ⇨ 10/83
RENAULT		
5 1.4 Alpine Turbo	840726	10/81 ⇨ 01/85
11 1.4	C2J720, C2J766, C2J767, C2J768	03/83 ⇨ 12/88
14 1.4	150	09/79 ⇨ 06/83
18 1.4	847720, 847722	04/78 ⇨ 07/86
18 1.6 TS	A6M725, A6M726	05/82 ⇨ 07/86
19 I 1.2	C1G730	01/88 ⇨ 12/92
19 I 1.4	C2J772, C2J776, C3J710	07/88 ⇨ 05/93
19 I 1.4 Cat	C3J710	01/89 ⇨ 04/92
19 II 1.4	C3J710	04/92 ⇨ 12/95
21 1.4	C2J770, C2L717	06/88 ⇨ 10/93
21 1.6	C2L	01/87 ⇨ 12/94
CLIO I 1.2	C3G720	06/94 ⇨ 02/98
EXPRESS 1.2	C1G	01/85 ⇨ 10/90
EXPRESS 1.4	C1J, C2J	01/85 ⇨ 10/90
EXPRESS 1.4i	C3G/C3J	01/85 ⇨ 10/90
SUPER 5 1.2	C1G702	01/87 ⇨ 12/96
SUPER 5 1.4	C2J798	10/84 ⇨ 07/89
SUPER 5 1.4 Turbo	C1J784	04/85 ⇨ 08/90
TWINGO I 1.2	C3G700, C3G702	03/93 ⇨ 10/96
TALBOT		
SAMBA 1.1	XW7	01/81 ⇨ 06/86

FACET 3.7688RS

1

ROTORS

Adatt./Suitable: ***DUCELLIER***

DUCELLIER
660 548
GENERAL MOTORS
7 992 639
93 150 134
PEUGEOT
5937 18

[00] **Eliminated on 14-04-2020. Please verify the availability through our local distributors**
- Eliminato il 14-04-2020. Verificare la disponibilità presso i nostri distributori
- Eliminé le 14-04-2020. Verifier la disponibilité auprès de nos distributeurs sur place
- Am 14-04-2020 gestrichen. Evtl. Verfügbarkeit bitte bei unseren Händlern prüfen
- Eliminado en fecha 14-04-2020. Verificar la disponibilidad a través de nuestros distribuidores locales

[111] **Paired article numbers**
- N° articolo appaiato
- Numéro d'article en paire
- paarige Artikelnummer
- Referencia artículo par

3.7688

[212] **Resistance Rotor [Ohm] 5000**
- Rotore resistenza [Ohm] 5000
- Résitance roteur [ohm] 5000
- Widerstand-Rotor [Ohm] 5000
- Resistencia rotor [ohm] 5000

[218] **with resistance**
- con resistenza
- avec résistance
- mit Widerstand
- con resistencia

FACET 3.7689RS

3

ROTORS

Adatt./Suitable: ***DUCELLIER***

DUCELLIER
660 740
662 899
GENERAL MOTORS
93 150 645
VW
052 905 225 A

[03] **Supplied until depletion**
- Fornibile fino ad esaurimento delle scorte
- Fourni jusqu'à épuisement du stock
- Lieferbar solange vorrat reicht
- Suministrado hasta el stock termina

[212] **Resistance Rotor [Ohm] 5000**
- Rotore resistenza [Ohm] 5000
- Résitance roteur [ohm] 5000
- Widerstand-Rotor [Ohm] 5000
- Resistencia rotor [ohm] 5000

VW		
DERBY 1.1	HB	02/77 ⇨ 09/81
DERBY 1.3	HH	02/77 ⇨ 09/81
POLO II 1.1	HB	10/81 ⇨ 09/89
POLO II 1.3	HH	10/81 ⇨ 07/83
SCIROCCO I 1.1	FA	04/74 ⇨ 07/79

FACET 3.7691

3

ROTORS

Adatt./Suitable: ***DUCELLIER***

ALFA ROMEO
700 295
60748377

BOSCH
1 234 332 802
1 234 335 802

CHRYSLER
83 300 126

CITROËN
54 524 21
54 524 21W
55 081 70
95 610 822
DM 211-16

DAF
22 48 85

DUCELLIER
16 903
49 423
611 723
661 004
661 154
661 764
662 368
664 895

FEMSA
33830- 1

FIAT
9934708

FORD
A790-X12200-DA

GENERAL MOTORS
7 992 291

LAND ROVER
RTC3341
RTC3616
RTC4933

Motorcraft
EDR 85

PEUGEOT
5937 05
5937 16
5937 34

RENAULT
08 54 120 600
77 01 021 981

ROVER
GRA2123

SEAT
000 993 470 8
SE 141914.004D

SEV-MARCHAL
D 4511
402 60003

TALBOT
0017 67 1100
1350 03 00
5135 00 300
7506 60 02

CITROËN		
CX I 2400	M23-623	08/76 ⇨ 06/80
DACIA		
1210 1.2	--	01/69 ⇨
1310 1.3	810-02/-99	05/83 ⇨ 07/04
1410 1.4	--	01/69 ⇨
ARO 10	--	01/72 ⇨ 12/80
FIAT		
132 1.6	132C.000	05/77 ⇨ 09/82
DUCATO I 1.8	169B	01/82 ⇨ 12/88
LAND ROVER		
90 2.5 4x4	17H	09/85 ⇨ 08/90
110/127 2.5 4x4	17H	10/85 ⇨ 07/90
DEFENDER 2.25	--	01/87 ⇨
PEUGEOT		
305 1.5	117(XR5S)	05/80 ⇨ 09/82
504 1.8	XM7	01/71 ⇨ 06/83
504 1.8 Injection	KF5, KF6	07/68 ⇨ 02/71
505 1.8	105(XM7), 105C(XM7A)	06/81 ⇨ 10/86
505 2.0 TI, STI	829(ZEJ)	08/79 ⇨ 10/86
J9 1.6	XC7P	03/80 ⇨ 06/87
RENAULT		
4 0.8	800705	10/83 ⇨ 10/88
5 1.3	810726	09/76 ⇨ 09/79
5 1.4 Alpine A5	840725	09/77 ⇨ 09/81
9 1.1	C1E715	09/81 ⇨ 05/87
11 1.1	C1E715, C1E720	03/83 ⇨ 06/86
RENAULT		
19 I 1.4	C1J	01/89 ⇨ 12/92
20 2.0	829700, 829701, 829702, 829703, 829.01	10/77 ⇨ 12/83
CLIO I 1.1	C1E700	01/91 ⇨ 09/98
EXPRESS 1.1	C1E	01/85 ⇨ 10/90
EXPRESS 955	C1C	01/85 ⇨ 10/90
FUEGO 1.6 [USA] R1368	A7L752	01/82 ⇨ 12/84
MASTER I 2.0	829731	07/80 ⇨ 06/85
MASTER I 28-35 2.0	829731	08/80 ⇨ 10/86
RAPID 1.0	C1C706	09/85 ⇨ 05/92
RAPID 1.1	C1E750, C1E752, C1E754, C1E756, C1E760, C1E762, C1E764	07/85 ⇨ 10/97
SUPER 5 1.1	C1E752, C1E754, C1E756, C1E760	10/84 ⇨ 12/96
TRAFIC I 1.4	C1J700	03/80 ⇨ 06/91
ROVER		
MINI 1.0	--	01/85 ⇨
MINI 1.3	--	01/85 ⇨
SEAT		
IBIZA I 0.9	146A000	08/86 ⇨ 05/93
TALBOT		
1307-1510 Simca 1307 1.3	--	07/75 ⇨ 01/80

FACET 3.7694

1

ROTORS

Adatt./Suitable: ***DUCELLIER***

BOSCH
1 234 332 860

CHRYSLER
83 300 128

CITROËN
95 559 241
95 611 732

DUCELLIER
663 550
663 869
664 203

FIAT
9940302

LANCIA
9940302

PEUGEOT
5937 28
5937 43

RENAULT
77 01 026 824
77 01 027 870

TALBOT
0043 21 2900

[111] **Paired article numbers**
- N° articolo appaiato
- Numéro d'article en paire
- paarige Artikelnummer
- Referencia artículo par

3.7694RS

[202] **without resistance**
- senza resistenza
- sans résistance
- ohne Widerstand
- sin resistencia

CITROËN		
AXEL 11	--	01/84 ⇨ 03/91
BX 1.1	109LA, H1A	04/86 ⇨ 06/91
BX 1.4	150C, K1F, K2D	07/86 ⇨ 12/94
BX 1.4 E	150B(XY8), 150J, 150Y, K1F, KAZ	09/82 ⇨ 12/94
BX 1.6	B2C	02/88 ⇨ 12/94
BX 1.9	159B, 159C, D6U, DKK	05/85 ⇨ 12/94
BX 1.9 GTi	D6D, D6K	01/87 ⇨ 01/92
BX 14	150C	01/86 ⇨ 02/93
BX 14 E	150A, 150C, K1G	10/82 ⇨ 02/93
BX 15	B1E(XU51C)	01/87 ⇨ 05/92
BX 16	171A, 171B, 171C, 171D, 23DH, B1E(XU51C), BAY(XU5CP), BAZ(XU5CP)	10/82 ⇨ 12/94
BX 19	159A, D2A(XU92C), D2C(XU92C), D2E, D6A(XU9J2), DKZ(XU9JA)	09/84 ⇨ 12/94
BX 19 Cat	DFZ(XU9J1)	07/86 ⇨ 12/94
BX 19 E 4x4	D2F	04/89 ⇨ 02/93
BX 19 GTi	D6A(XU9J2), DKZ(XU9JA)	07/86 ⇨ 02/93
BX 19 GTi 4x4	DKZ(XU9JA)	06/88 ⇨ 02/93
C15 1.0	108C	10/84 ⇨ 07/88
C15 1.0 E	TU9K	11/92 ⇨ 07/96
C15 1.1	109K, E1A, XW7	10/84 ⇨ 12/96
C15 1.3	G1A	07/87 ⇨ 05/88
C15 1.4	150D(XY7)	05/87 ⇨ 10/92
C15 1.4 E	150D(XY7)	05/87 ⇨ 12/96
CX I 2000	829A5	06/79 ⇨ 08/85
CX II 20 RE	829A5	08/85 ⇨ 12/92
CX II 22 TRS	J6TA500	07/85 ⇨ 12/92
CITROËN		
GS A 1.3	G13/625	07/78 ⇨ 07/86
LNA 1.1	109/5E	07/82 ⇨ 04/85
VISA 11 E	109K	09/78 ⇨ 06/88
FIAT		
DUCATO I 2.0	170B, 170D, 170C(XN1T), XN1T	01/82 ⇨ 05/94
DUCATO I 2.0 4x4	170D	06/90 ⇨ 05/94
PANDA I 1000	156A2.000	12/93 ⇨
PANDA I 1000 CLX	156A2.000	05/91 ⇨ 12/94
PANDA I 1000 Fire	156A2.000	05/86 ⇨ 04/91
PANDA I 750	156A4.000	01/86 ⇨ 10/03
PANDA I 750 Cat	156A4.048	01/95 ⇨ 10/03
PANDA I 750 Fire	156A4.048	11/88 ⇨ 04/91
TALENTO 2.0	170B	03/89 ⇨ 03/94
TIPO I 1.1	160A3.000	01/88 ⇨ 10/91
UNO 45 1.0	156A2.000	09/89 ⇨ 09/92
UNO 45 1.0 Fire	--	01/83 ⇨ 12/89
UNO 60 1.1	160A3.000	04/89 ⇨ 12/92
LANCIA		
Y10 1.0 Fire Trazione integrale	156A2.000, 156A2.100, 156A2.246	12/86 ⇨ 02/92
Y10 1.1 i.e Fire	156C.000	08/89 ⇨ 06/92
Y10 1.1 i.e Fire Trazione integrale	156C.000	08/89 ⇨ 06/92
PEUGEOT		
205 I 1.0	108C(XV8)	02/83 ⇨ 12/90
205 I 1.1	109F(XW7), 109N(XW7)	02/83 ⇨ 10/87
205 I 1.3	G1A	02/84 ⇨ 10/87
205 I 1.4	150(XY6B), 150B(XY8), 150D(XY7), 150G(XY7), 150H(XY8)	02/83 ⇨ 10/87
205 I 1.5	Y2/K	02/84 ⇨ 10/87
205 I 1.6	B1A(XU51C), B1E(XU51C), BAZ(XU5CP)	08/86 ⇨ 10/87
205 I 1.9 GTI	DFZ(XU9J1)	03/87 ⇨ 10/87
205 II 1.1	109N(XW7)	10/87 ⇨ 10/90
205 II 1.1 XA	E1	07/87 ⇨ 10/88
205 II 1.2	F1	01/87 ⇨ 12/90
205 II 1.3	G1A	08/90 ⇨ 07/92
205 II 1.4	150(XY6B), 150B(XY8), 150D(XY7), 150G(XY7), 150H(XY8)	01/87 ⇨ 05/89
205 II 1.4 CJ	150D(XY7), 150G(XY7)	03/88 ⇨ 05/89
205 II 1.4 CT	150B(XY8), 150H(XY8)	04/86 ⇨ 12/88
205 II 1.6	B1A(XU51C), B1E(XU51C), BAZ(XU5CP)	10/87 ⇨ 09/98
205 II 1.9 CTI	DFZ(XU9J1)	10/87 ⇨ 12/94
205 II 1.9 GTI Cat	DFZ(XU9J1)	10/87 ⇨ 07/94
309 I 1.1	E1	10/85 ⇨ 07/89
309 I 1.3	G1A, G2S	10/85 ⇨ 08/89
309 I 1.3 XL	--	09/86 ⇨ 08/89
309 I 1.5	Y2/K	06/87 ⇨ 12/89
309 I 1.6	B1A(XU51C), B1D(XU51C), B1E(XU51C)	10/85 ⇨ 07/89
309 I 1.6 Cat	BAZ(XU5CP)	09/86 ⇨ 12/89
309 I 1.9	D2B(XU9S), DFZ(XU9J1), XU92C	10/85 ⇨ 07/89
309 II 1.9	XU92C	07/89 ⇨ 12/93
505 2.0	106E(XN1A)	09/85 ⇨ 09/95
604 2.0 i	XN6	01/85 ⇨ 12/86
J5 1.8	169B(XM7T)	01/83 ⇨ 11/88
J9 2.0	XN1P	03/80 ⇨ 06/87
RENAULT		
5 1.4 Alpine Turbo	840726	10/81 ⇨ 01/85
9 1.2	C1G700, C1G710	09/85 ⇨ 12/88
11 1.2	C1G700, C1G710	10/84 ⇨ 12/88
11 1.4	C2J720, C2J766, C2J767, C2J768	03/83 ⇨ 12/88
18 1.4	847720, 847722	04/78 ⇨ 07/86
18 1.6 TS	A6M725, A6M726	05/82 ⇨ 07/86
18 2.0	J6R716	05/82 ⇨ 07/86
19 I 1.2	C1G730	01/88 ⇨ 12/92
19 I 1.4	C2J772, C2J776, C3J710	07/88 ⇨ 05/93
19 I 1.4 Cat	C3J710	01/89 ⇨ 04/92
19 II 1.4	C3J710	04/92 ⇨ 12/95
21 1.6	C2L	01/87 ⇨ 12/94
25 2.0	J6R706, J6R707	04/84 ⇨ 12/92
25 2.0 12V	74AR-FXE, 7CYQD80D-E3, J7R721	06/88 ⇨ 12/93
25 2.2	J7T706, J7T707	04/84 ⇨ 12/89
CLIO I 1.2	C3G720	06/94 ⇨ 02/98
ESPACE I 2.0	53AZ-FXE, J6R234, J6R236	07/84 ⇨ 12/90
ESPACE II 2.0	J7R768	01/91 ⇨ 10/96
ESPACE II 2.2	J7T772	01/91 ⇨ 10/96
ESPACE II 2.2 4x4	J7T772	03/91 ⇨ 12/96
EXPRESS 1.2	C1G	01/85 ⇨ 10/90
EXPRESS 1.4	C1J, C2J	01/85 ⇨ 10/90
EXPRESS 1.4i	C3G/C3J	01/85 ⇨ 10/90
FUEGO 1.6 [USA] R136A	A7L	01/82 ⇨ 12/86
FUEGO 1.6 [USA] R136B	A7L	01/84 ⇨ 12/86
MASTER I 2.0	J5R718, J5R728	06/85 ⇨ 12/95

RENAUTHOR		
MASTER I 2.2	J7T788	08/93 ⇨ 02/98
MASTER I 28-35 2.0	J5R718	10/86 ⇨ 07/98
MASTER I 30 2.2	J7T782, J7T788	08/80 ⇨ 07/98
SUPER 5 1.2	C1G702	01/87 ⇨ 12/96
SUPER 5 1.4	C2J798	10/84 ⇨ 07/89
SUPER 5 1.4 Turbo	C1J784	04/85 ⇨ 08/90
TRAFIC I 1.4	C1J700	03/80 ⇨ 06/91
TRAFIC I 2.0	J5R716	05/89 ⇨ 08/90
TRAFIC I 2.2	J7T600, J7T780	05/89 ⇨ 04/98
TRAFIC I 2.2 4x4	J7T600, J7T780	05/89 ⇨ 04/98
TALBOT		
SOLARA 1.3	2M102.979	02/80 ⇨ 07/86
TAGORA 2.1	5N2	06/80 ⇨ 12/83

FACET 3.7694RS

1

ROTORS

Adatt./Suitable: ***DUCELLIER***

[111] **Paired article numbers**
- N° articolo appaiato
- Numéro d'article en paire
- paarige Artikelnummer
- Referencia artículo par

3.7694

[212] **Resistance Rotor [Ohm] 5000**
- Rotore resistenza [Ohm] 5000
- Résitance roteur [ohm] 5000
- Widerstand-Rotor [Ohm] 5000
- Resistencia rotor [ohm] 5000

[218] **with resistance**
- con resistenza
- avec résistance
- mit Widerstand
- con resistencia

FACET 3.7696RS

1

ROTORS

Adatt./Suitable: ***DUCELLIER***

CITROËN
94 059 373 08
DUCELLIER
664 518
2 558 654
FIAT
9405937478
PEUGEOT
5937 30
5937 49
VOLVO
3213390
32133902
3287599
32875999

[03] **Supplied until depletion**
- Fornibile fino ad esaurimento delle scorte
- Fourni jusqu'à épuisement du stock
- Lieferbar solange vorrat reicht
- Suministrado hasta el stock termina

[212] **Resistance Rotor [Ohm] 5000**
- Rotore resistenza [Ohm] 5000
- Résitance roteur [ohm] 5000
- Widerstand-Rotor [Ohm] 5000
- Resistencia rotor [ohm] 5000

FIAT		
DUCATO I 2.0	170D	07/90 ⇨ 03/94
VOLVO		
340-360 I 1.3	B13, B13.4E	08/88 ⇨ 12/90
340-360 I 1.4	B14.3E, B14.4E, B14.4ED, B14.40, B14.4S	08/82 ⇨ 07/91

FACET 3.7697

3

ROTORS

Adatt./Suitable: ***DUCELLIER***

CHRYSLER
83 300 129
DUCELLIER
665 852
666 777
2 524 132
2 559 115
RENAULT
77 00 727 261
77 01 029 972
VOLVO
3342163
33421637
3342441
3342863
33428632
3449620

RENAULT		
11 I 1.7	F2N700	10/83 ⇨ 12/87
19 I 1.7	F2N720, F2N721, F2N722, F2N724, F3N740, F3N741, F3N742, F3N743, F3N746	07/88 ⇨ 12/92
19 II 1.7	F2N720, F2N721, F2N726, F2N727, F3N740, F3N741, F3N742, F3N743, F3N746	09/90 ⇨ 12/95
19 II 1.8	5F140FE, 8NA20S, F3P682, F3P704, F3P705, F3P706, F3P707, F3P708, F3P764, F3P765	04/92 ⇨ 06/96
21 I 1.7	F2N710, F2N711, F2N712, F2N722, F2N750, F2N752, F2N754, F2N758, F2N786, F3N722, F3N723, F3N726	03/86 ⇨ 12/95
21 I 1.7 Cat	F3N726	05/88 ⇨ 06/93
21 2.0	F2R702	09/89 ⇨ 12/91
CLIO I 1.7	F2N770	01/91 ⇨ 12/93
CLIO I 1.8	0HR10DE, F3P710, F3P714, F3P754	08/90 ⇨ 09/98
CLIO I 1.8 Rsi	F3P712, F3P758	01/93 ⇨ 09/98
LAGUNA I 1.8	F3P678, F3P720, F3P724	11/93 ⇨ 03/01
LAGUNA I 2.0	6Z7U730, F3R722	11/93 ⇨ 03/01
SUPER 5 1.7	F2N740, F2N742, F3N716, F3N717	10/86 ⇨ 03/95
SUPER 5 1.7 i	F3N702	10/86 ⇨ 08/91
TRAFIC I 1.7	F1N720	05/89 ⇨ 08/94
VOLVO		
340-360 1.7	B172K	08/85 ⇨ 07/91
440 1.6	B16F	09/88 ⇨ 12/96
440 1.7	B18E, B18EP, B18F, B18FP, B18K, B18KD, B18KP, B18KPD	08/88 ⇨ 12/96
440 1.7 Turbo	B18FT	08/88 ⇨ 12/96
440 1.8	B18U	08/91 ⇨ 12/96
440 2.0	B20F	08/92 ⇨ 07/96
460 1.6	B16F	07/92 ⇨ 07/96
460 1.7	B18EP, B18FP, B18K, B18KD, B18KP	09/88 ⇨ 07/96
460 1.7 Turbo	B18FT	08/89 ⇨ 07/96
460 1.8	B18U	08/91 ⇨ 07/96
460 2.0	B20F	08/92 ⇨ 07/96
480 1.7	B18E, B18ED, B18EP, B18F, B18FP	04/86 ⇨ 07/96
480 1.7 Turbo	B18FT	08/87 ⇨ 07/96
480 2.0	B20F	08/92 ⇨ 09/95

FACET 3.7699RS

1

ROTORS

Adatt./Suitable: ***DUCELLIER***

AUDI
026 905 225 K
DUCELLIER
666 867
SEAT
026 905 225 K
VW
026 905 225 K

[212] **Resistance Rotor [Ohm] 1000**
- Rotore resistenza [Ohm] 1000
- Résitance roteur [ohm] 1000
- Widerstand-Rotor [Ohm] 1000
- Resistencia rotor [ohm] 1000

AUDI		
80 II 1.6	DT	08/78 ⇨ 03/87
80 II 1.8	DS	01/83 ⇨ 08/86
80 III 1.4	SE	08/86 ⇨ 07/88
80 III 1.6	PP, RN, RNA	09/86 ⇨ 09/91
80 III 1.8	RU	10/86 ⇨ 01/90
80 III 1.8 S	NE	09/86 ⇨ 10/91
100 III 1.8	DS, NP	08/83 ⇨ 12/90
100 III 1.8 quattro	NP, SH	10/84 ⇨ 07/90
A4 I 1.6	ADP	11/94 ⇨ 09/01
SEAT		
CORDOBA I 1.6 i	1F	05/94 ⇨ 06/99
CORDOBA I 1.8 i	ABS, ACC, ADZ	02/93 ⇨ 09/02
IBIZA II 1.6 i	1F	09/94 ⇨ 06/99
IBIZA II 1.8 i	ABS, ACC, ADZ	03/93 ⇨ 08/99
INCA 1.4 i	AEX, AKV, APQ	11/95 ⇨ 06/03
INCA 1.6 i	1F, AEE	11/95 ⇨ 05/98
TOLEDO I 1.8 i	ADZ	11/93 ⇨ 12/96
VW		
PASSAT II 1.6	DT	08/80 ⇨ 03/88
PASSAT II 1.8	DS	01/83 ⇨ 03/88
PASSAT II 1.8 Syncro	DS	01/86 ⇨ 03/88
PASSAT IV 1.6	ADP	10/96 ⇨ 11/00
JETTA II 1.6	ABN, EZ, EZA, PN, RF	01/84 ⇨ 07/92
JETTA II 1.8	GU	08/84 ⇨ 10/91
JETTA II 1.8 Syncro	GU	08/87 ⇨ 12/88
CADDY II 1.6	1F	11/95 ⇨ 05/97
CADDY II 75 1.6	1F	11/95 ⇨ 05/97
GOLF I 1.6	EW	08/83 ⇨ 04/92
GOLF I 1.8	EX	08/83 ⇨ 09/92
GOLF II 1.6	ABN, EZ, PN, RF	08/83 ⇨ 12/92
GOLF II 1.6 G	EZA, PN	08/86 ⇨ 07/91
GOLF II 1.8	GU	08/84 ⇨ 10/91
GOLF II 1.8 Syncro	GU	02/86 ⇨ 07/91
GOLF III 1.6	AEK	07/94 ⇨ 04/99
GOLF III 1.8	AAM, ABS, ADZ	08/91 ⇨ 04/99
GOLF III 1.8 Syncro	ABS, ADZ	01/93 ⇨ 04/99
GOLF III 2.0	ADY, AEP, AGG, AKR	11/91 ⇨ 04/99
GOLF III 2.0 GL	AEP	08/95 ⇨ 09/97
GOLF IV 2.0	AGG, AKR	06/98 ⇨ 06/02
PASSAT III 1.6	AEK	07/94 ⇨ 08/96
PASSAT III 1.8	AAM, ABS, ADZ	02/88 ⇨ 05/97
POLO III 75 1.6	1F	11/95 ⇨ 09/97
SCIROCCO II 1.6	EW, EWA, RE	01/83 ⇨ 07/90
SCIROCCO II 1.8	EX	08/83 ⇨ 07/92
VENTO 1.6	AEK	10/94 ⇨ 09/98
VENTO 1.8	AAM, ABS, ADZ	11/91 ⇨ 09/98

FACET 3.7701

1

ROTORS

Adatt./Suitable: ***DUCELLIER***

DUCELLIER
2 558 743

RENAULT
77 01 033 622

RENAULT		
19 I 1.2i	E7F	01/89 ⇨ 12/92
19 I 1.4	E6J700, E6J701, E7J700	01/88 ⇨ 12/92
19 I 1.8 16V	F7P700, F7P704	06/89 ⇨ 09/92
19 II 1.2	E7F730	05/92 ⇨ 09/94
19 II 1.4	E6J706, E7J706, E7J707, E7J742, E7J745	01/92 ⇨ 12/95
19 II 1.8 16V	F7P704	04/92 ⇨ 06/96
21 2.0	J7R740	02/90 ⇨ 06/94
21 2.0 4x4	J7R740	12/89 ⇨ 02/94
21 2.0 Turbo	J7R752, J7R756	04/87 ⇨ 10/92
21 2.0 Turbo 4x4	J7R752, J7R756	08/89 ⇨ 10/93
21 2.0 TXi	1SCRMP10U1, J7R740	07/89 ⇨ 05/93
25 2.0 12V	74AR-FXE, 7CYQD80D-E3, J7R721	06/88 ⇨ 12/93
CLIO I 1.2	E5F710, E5F716, E7F700, E7F706, E7F708, E7F750	05/90 ⇨ 09/98
CLIO I 1.4	E6J712, E6J713, E6J718, E7J601, E7J710, E7J711, E7J716, E7J718, E7J719, E7J754, E7J756, E7J757	01/90 ⇨ 09/98
CLIO I 1.8 16V	F7P720, F7P722	01/91 ⇨ 03/96
CLIO I Williams	F7R700	01/94 ⇨ 09/98
MEGANE I 1.4	E7J764	09/96 ⇨ 08/03
MEGANE I 1.4 e	E7J764	01/96 ⇨ 08/03
MEGANE I 1.4 Eco	E7J624	01/96 ⇨ 03/99
MEGANE SCÉNIC I 1.4 i	E7J764	01/97 ⇨ 09/99
RAPID 1.4	E6J738, E7J720, E7J724, E7J726, E7J728, E7J770, E7J771, E7J773	09/91 ⇨ 03/98
RAPID 1.4 RN	E6J734	09/91 ⇨ 08/93
SAFRANE I 2.0	0LJY, J7R732, J7R738, J7R739	08/92 ⇨ 09/96
SAFRANE I 2.0 12V	J7R734, J7R735	04/92 ⇨ 07/96
SAFRANE I 2.2	1MR479QB, J7T761, J7T762	04/92 ⇨ 07/96
TRAFIC I 2.0	J5R726	05/89 ⇨ 08/90
TRAFIC I 2.0 RWD	J5R726	05/89 ⇨ 10/97

FACET 3.7702RS

3

ROTORS

Adatt./Suitable: ***DUCELLIER***

CITROËN
95 651 019

PEUGEOT
5937 47

[212] **Resistance Rotor [Ohm] 1000**
- Rotore resistenza [Ohm] 1000
- Résitance roteur [ohm] 1000
- Widerstand-Rotor [Ohm] 1000
- Resistencia rotor [ohm] 1000

CITROËN		
AX 1.3 Sport	M4A	04/87 ⇨ 12/88
AX 10	C1A	09/86 ⇨ 06/92
AX 10 E	C3A	12/86 ⇨ 12/88
AX 11	H1A, H1B, HDZ(TU1M)	09/86 ⇨ 12/97
AX 11 4x4	H1A	06/91 ⇨ 07/92
AX 11 Cat	HAZ(TU1CP)	09/88 ⇨ 12/89

CITROËN		
AX 14	K1A(TU3), K1B, K1F, K1G, K1J, K2A, K2B, K2D, KAY(TU3CP), KDX(TU3M/Z), KDY(TU3FM), KDY(TU3M), KDZ(TU3M/Z)	09/86 ⇨ 04/97
AX 14 4x4	KD4, KDX(TU3M/Z), KDY(TU3FM), KDY(TU3M), KDZ(TU3M/Z)	06/91 ⇨ 12/96
AX 14 GT	KDZ(TU3M/Z)	01/89 ⇨ 12/91
BX 1.1	109LA, H1A	04/86 ⇨ 06/91
BX 1.4	150C, K1F, K2D	07/86 ⇨ 12/94
BX 1.4 E	150B(XY8), 150J, 150Y, K1F, KAZ	09/82 ⇨ 12/94
BX 1.6	B2C	02/88 ⇨ 12/94
BX 1.9	159B, 159C, D6U, DKK	05/85 ⇨ 12/94
BX 1.9 GTi	D6D, D6K	01/87 ⇨ 01/92
BX 14	150C, KDY(TU3M), KDZ(TU3M/Z)	01/86 ⇨ 02/93
BX 14 E	150A, 150C, K1G	10/82 ⇨ 02/93
BX 15	B1E(XU51C)	01/87 ⇨ 05/92
BX 16	171A, 171B, 171C, 171D, 23DH, B1E(XU51C), BAY(XU5CP), BAZ(XU5CP), BDY(XU5M), BDZ(XU5M)	10/82 ⇨ 12/94
BX 16 E	BDY(XU5M), BDZ(XU5M)	05/89 ⇨ 02/93
BX 19	159A, D2A(XU92C), D2C(XU92C), D2E, D6A(XU9J2), DDZ(XU9M), DKZ(XU9JA)	09/84 ⇨ 12/94
BX 19 4x4	DDZ(XU9M)	10/90 ⇨ 05/91
BX 19 Cat	DFZ(XU9J1)	07/86 ⇨ 12/94
BX 19 E	DDZ(XU9M)	06/88 ⇨ 02/93
BX 19 E 4x4	D2F	04/89 ⇨ 02/93
BX 19 GTi	D6A(XU9J2), DKZ(XU9JA)	07/86 ⇨ 02/93
BX 19 GTi 4x4	DKZ(XU9JA)	06/88 ⇨ 02/93
C15 1.0	108C(XV8), C1A, C1A(TU9/K), C1B(TU9/W), TU9	10/84 ⇨ 12/97
C15 1.1	H1A, HDZ(TU1M), TU1	08/88 ⇨ 07/96
C15 1.1 i	HDZ(TU1M), TU1MZ	07/88 ⇨ 12/96
C15 1.4	K1A, K1G, K1H(TU3A), KDY(TU3M)	07/87 ⇨ 12/96
C15 1.4 E	K1F, K1J, K2D, K3A, KAZ	07/86 ⇨ 12/96
C15 1.4 i	KDY(TU3FM), KDY(TU3M)	05/91 ⇨ 12/96
JUMPER I 2.0	XU102C	02/94 ⇨ 02/02
XM I 2.0	--	05/89 ⇨ 04/94
XM I 2.0 i	RDZ(XU10MZ), RFZ(XU10J2)	05/89 ⇨ 06/94
BERLINGO I 1.4	TU32	07/96 ⇨ 10/98
ZX 1.1	H1A, H1B, HDZ(TU1M), TU1	03/91 ⇨ 06/97
ZX 1.4 i	KDY(TU3M)	10/93 ⇨ 10/97
ZX 1.9	D6E(XU9JA)	03/91 ⇨ 06/97
ZX 1.9 i	DKZ(XU9JA), XU9JA	03/91 ⇨ 06/97

PEUGEOT		
106 I 1.0	TU9	09/91 ⇨ 03/01
106 I 1.1	H1B(TU1), HDZ(TU1M)	08/91 ⇨ 04/96
106 I 1.4	K5A(TU3), KDY(TU3M), TU3.2	08/91 ⇨ 04/96
106 II 1.1	H1B(TU1)	04/96 ⇨
205 I 1.4	TU3	01/83 ⇨ 12/90
205 I 1.6	B1A(XU51C), B1E(XU51C)	08/86 ⇨ 10/87
205 II 1.0	TU9	10/87 ⇨ 09/98
205 II 1.1	H1B(TU1), HDZ(TU1M)	10/87 ⇨ 09/98
205 II 1.1 CJ	HDZ(TU1M)	10/89 ⇨ 12/94
205 II 1.4	K1D(TU3A), K2B(TU3S), KDY(TU3M), KDZ(TU3M)	06/87 ⇨ 09/98
205 II 1.4 CJ	K1D(TU3A), KDY(TU3M)	03/89 ⇨ 12/94
205 II 1.6	B1A(XU51C), B1E(XU51C)	10/87 ⇨ 09/98
205 II 1.9 GTI	DKZ(XU9JAZ)	10/87 ⇨ 10/94
306 1.4	TU3	01/93 ⇨ 04/02
309 I 1.4	K1D(TU3A), K2B(TU3S), KDY(TU3M), KDZ(TU3M)	08/88 ⇨ 08/89
309 II 1.1	H1B(TU1), HDZ(TU1M)	09/89 ⇨ 12/93
309 II 1.4	KDZ(TU3M), TU3, TU3F2	07/89 ⇨ 12/93
309 II 1.6	18EM, BDZ(XU5M)	07/89 ⇨ 12/93
309 II 1.9	DDZ(XU9M), XU92C	07/89 ⇨ 12/93
309 II 1.9 GTI	DKZ(XU9JAZ)	07/89 ⇨ 12/93
405 I 1.4	K5A(TU3), TU3A, TU3F2	01/87 ⇨ 12/92
405 I 1.6	--, 18EM, B1E(XU51C), BDZ(XU5M)	01/87 ⇨ 12/92
405 I 1.6 4x4	BDZ(XU5M)	04/88 ⇨ 07/92
405 I 1.6 SRi 4x4	BDZ(XU5M)	04/88 ⇨ 07/92
405 I 1.9	D2C(XU92C), DDZ(XU9M), DFZ(XU9J1), DKZ(XU9JAZ), XU9J2, XU9J2/D6D	01/87 ⇨ 12/92
405 I 1.9 4x4	DDZ(XU9M), DKZ(XU9JAZ)	06/87 ⇨ 12/92
405 I 1.9 Antipollution	XU92C	01/87 ⇨ 12/92
405 I 1.9 Injection	DFZ(XU9J1)	07/87 ⇨ 12/92
405 I 1.9 Trazione integrale	DFZ(XU9J1)	09/88 ⇨ 07/92
405 II 1.4	TU3F2	01/93 ⇨ 12/96
405 II 1.6	18EM	08/92 ⇨ 05/97
405 II 1.9	XU92C	01/93 ⇨ 12/96
605 2.0	--, R5A(XU102C), XU10M	01/89 ⇨ 09/99

FACET 3.7703RS

3

ROTORS

Adatt./Suitable: ***DUCELLIER***

GENERAL MOTORS
90 376 979
90 540 398

OPEL
12 12 204
12 12 207

[212] **Resistance Rotor [Ohm] 1000**
- Rotore resistenza [Ohm] 1000
- Résitance roteur [ohm] 1000
- Widerstand-Rotor [Ohm] 1000
- Resistencia rotor [ohm] 1000

OPEL		
ASTRA F 1.6	16LZ2, 16NZ2	09/94 ⇨ 09/98
ASTRA F 1.8 i	C18NZ	09/91 ⇨ 09/98
ASTRA F 2.0 i	C20NE	09/91 ⇨ 09/98
CALIBRA A 2.0 i	C20NE	08/89 ⇨ 12/96
CALIBRA A 2.0 i 4x4	C20NE	06/90 ⇨ 07/97
FRONTERA A 2.0 i	C20NE	03/92 ⇨ 10/98
KADETT E 1.8	18SE	01/86 ⇨ 08/91
KADETT E 1.8 i	C18NZ, S18NV	06/85 ⇨ 05/92
KADETT E 2.0 GSI	20NE, 20SEH	09/86 ⇨ 08/91
KADETT E 2.0 GSI Cat	C20NE	09/86 ⇨ 08/91
KADETT E 2.0 i	20NE	10/86 ⇨ 02/93
KADETT E 2.0 i Cat	C20NE	10/86 ⇨ 02/93
OMEGA A 1.8	18SEH, E18NVR, S18NV	09/86 ⇨ 03/94
OMEGA A 1.8 N	18NV	09/86 ⇨ 08/87
OMEGA A 1.8 S	18SV	09/86 ⇨ 03/94
OMEGA A 2.0	20SE, C20NE	09/86 ⇨ 04/94
OMEGA A 2.0 i	C20NE	09/86 ⇨ 04/94
OMEGA B 2.0	20SE	03/94 ⇨ 12/00
VECTRA A 1.6	C16LZ2	08/92 ⇨ 07/93
VECTRA A 1.6 i	C16NZ2	09/88 ⇨ 11/95
VECTRA A 1.6 i Cat	C16NZ2	09/88 ⇨ 11/95
VECTRA A 1.8 i	18SV	09/88 ⇨ 10/90
VECTRA A 1.8 i Cat	C18NZ	03/90 ⇨ 11/95
VECTRA A 1.8 S	18SV, E18NVR	09/88 ⇨ 10/90
VECTRA A 1.8 S 4x4	E18NVR	01/89 ⇨ 07/89
VECTRA A 2.0 i	20NE, 20SEH	09/88 ⇨ 09/92
VECTRA A 2.0 i 4x4	20NE, 20SEH	01/89 ⇨ 07/92
VECTRA A 2.0 i Cat	C20NE	09/88 ⇨ 11/95
VECTRA A 2.0 i Cat 4x4	C20NE	01/89 ⇨ 11/95
VECTRA A 2.0 i GT	20SEH	09/88 ⇨ 11/95
VECTRA B 1.6 i	16LZ2	10/95 ⇨ 07/03

VAUXHALL		
ASTRA III 1.8 i	C18NZ	09/91 ⇨ 09/98
ASTRA III 2.0 i	C20NE	09/91 ⇨ 09/98
CALIBRA 2.0 i	C20NE	06/90 ⇨ 07/97
CALIBRA 2.0 i 4x4	C20NE	06/90 ⇨ 07/97
FRONTERA A 2.0	C20NE	04/95 ⇨ 08/98
FRONTERA A 2.0 i	C20NE	03/92 ⇨ 10/98
OMEGA B 2.0	20SE	09/95 ⇨ 09/96

FACET 3.7704

3

ROTORS

Adatt./Suitable: ***DUCELLIER***

DUCELLIER
2 537 260
PEUGEOT
5937 44

[03] Supplied until depletion
- Fornibile fino ad esaurimento delle scorte
- Fourni jusqu'à épuisement du stock
- Lieferbar solange vorrat reicht
- Suministrado hasta el stock termina

CITROËN		
BX 1.9 GTi 16V	159K, DFK	01/87 ⇨ 12/94
BX 19 GTi 16V	D6C(XU9J4), DFW(XU9J4)	09/87 ⇨ 02/93
PEUGEOT		
309 II 1.9 GTI 16V	D6C(XU9J4)	08/89 ⇨ 07/90
405 I 1.9	D6C(XU9J4)	06/87 ⇨ 07/92
405 I 1.9 4x4	D6C(XU9J4)	06/87 ⇨ 07/92
405 I 1.9 Sport MI-16	D6C(XU9J4), DFW(XU9J4Z)	06/87 ⇨ 11/92
405 I 1.9 SPort MI-16 4x4	DFW(XU9J4Z)	06/87 ⇨ 07/92
405 I 1.9 Trazione integrale	D6C(XU9J4)	06/87 ⇨ 07/92

FACET 3.7752

3,5

ROTORS

Adatt./Suitable: ***FEMSA***

FEMSA
12133- 1
12133- 4
22488- 1
FIAT
3892873
3895702
9936807
FIAT (YV)
7073054/1
RENAULT
08 57 113 700
SEAT
000 389 287 3
3892873
NG1 213 340 6

[03] Supplied until depletion
- Fornibile fino ad esaurimento delle scorte
- Fourni jusqu'à épuisement du stock
- Lieferbar solange vorrat reicht
- Suministrado hasta el stock termina

[111] Paired article numbers
- N° articolo appaiato
- Numéro d'article en paire
- paarige Artikelnummer
- Referencia artículo par

3.7752RS

[202] without resistance
- senza resistenza
- sans résistance
- ohne Widerstand
- sin resistencia

FIAT		
131 1.3 Mirafiori	131A6.000	10/74 ⇨ 09/81
SEAT		
RONDA 1.2	021A1000	08/83 ⇨ 05/85
RONDA 1.6	138AR6.000	08/83 ⇨ 09/85

FACET 3.7752RS

3,5

ROTORS

Adatt./Suitable: ***FEMSA***

FEMSA
32493
FIAT
9936831
SEAT
000 993 683 1
SE 141914.004C

[111] Paired article numbers
- N° articolo appaiato
- Numéro d'article en paire
- paarige Artikelnummer
- Referencia artículo par

3.7752

[212] Resistance Rotor [Ohm] 5000
- Rotore resistenza [Ohm] 5000
- Résitance roteur [ohm] 5000
- Widerstand-Rotor [Ohm] 5000
- Resistencia rotor [ohm] 5000

[218] with resistance
- con resistenza
- avec résistance
- mit Widerstand
- con resistencia

FIAT		
127 0.9	100GL.048	06/71 ⇨ 05/83
132 1.6	132C.000	05/77 ⇨ 09/82
PANDA I 800	100GL6.000	02/81 ⇨ 12/85
SEAT		
FURA 0.9	100GL3000	01/82 ⇨ 06/86
IBIZA I 0.9	146A000	08/86 ⇨ 05/93
MARBELLA 0.8	5K9K718	08/86 ⇨ 12/93
MARBELLA 0.9	09NCA	01/87 ⇨ 12/93
PANDA 0.9	100GL3000	10/80 ⇨ 12/86
PANDA 34 850	--	01/80 ⇨ 12/83
PANDA 35 850	--	01/80 ⇨ 12/83
PANDA 45	--	01/82 ⇨ 12/85
TERRA 0.9	09NCA	02/87 ⇨ 12/96

FACET 3.7758

1

ROTORS

Adatt./Suitable: ***FEMSA***

BOSCH
9 231 334 371
FEMSA
28994- 1
28994- 1J
LAND ROVER
00000A00070
RENAULT
77 02 124 320

[03] Supplied until depletion
- Fornibile fino ad esaurimento delle scorte
- Fourni jusqu'à épuisement du stock
- Lieferbar solange vorrat reicht
- Suministrado hasta el stock termina

RENAULT		
4 0.8	80001	09/71 ⇨ 12/88
4 1.1	688712	02/78 ⇨ 06/90
5 1.4	847725	01/82 ⇨ 12/85
9 1.2	C1G700, C1G710	09/85 ⇨ 12/88
11 1.2	C1G700, C1G710	10/84 ⇨ 12/88
11 1.4	C2J720, C2J766, C2J767, C2J768	03/83 ⇨ 12/88
11 1.7	F2N700	10/83 ⇨ 12/87
18 1.4	847720, 847722	04/78 ⇨ 07/86
19 I 1.2	C1G730	01/88 ⇨ 12/92
19 I 1.4	C2J772, C2J776, C3J710	07/88 ⇨ 05/93
19 I 1.4 Cat	C3J710	01/89 ⇨ 04/92
19 II 1.4	C3J710	04/92 ⇨ 12/95
EXPRESS 1.1	C1E	01/85 ⇨ 10/90
EXPRESS 955	C1C	01/85 ⇨ 10/90

RENAULT		
RAPID 1.1	C1E750, C1E760	07/85 ⇨ 04/95
SUPER 5 1.0	C1C700	10/84 ⇨ 10/88

FACET 3.7885

1

ROTORS

Adatt./Suitable: ***FORD***

FORD
0 267 26
1 444 043
5 014 405
C6AH-12200-A
C7AH-12200-A
D5FZ-12200-A
DORY-12200-A
GENERAL MOTORS
7 992 217
Motorcraft
DR 220A
DRE 90
EDR 3
EDR 3 D
EDR 3 S

[202] without resistance
- senza resistenza
- sans résistance
- ohne Widerstand
- sin resistencia

FORD		
CORTINA 1300	KL13H	10/70 ⇨ 03/72
FIESTA I 0.9	TKA, TKW, TLA	05/76 ⇨ 08/83
TAUNUS 1.6	LCJ	07/79 ⇨ 07/82
TRANSIT I 1.6	4RB	11/77 ⇨ 10/86
TRANSIT I 2.0	4RC	11/77 ⇨ 07/82

FACET 3.7892

1

ROTORS

Adatt./Suitable: ***FORD***

CHRYSLER
56 027 075
FORD
1 643 692
E6EE-12200-AA
E6FZ-12200-A
JEEP
33003389
56027075
MAZDA
ZZM0-24-312
Motorcraft
DR 375A
RENAULT
89 33 003 389

[03] Supplied until depletion
- Fornibile fino ad esaurimento delle scorte
- Fourni jusqu'à épuisement du stock
- Lieferbar solange vorrat reicht
- Suministrado hasta el stock termina

FORD		
SCORPIO I 2.4 i	ARC	09/86 ⇨ 09/88
SCORPIO I 2.9 i	BRC, BRD, BRE, BRF	09/86 ⇨ 12/94
SCORPIO I 2.9 i 4x4	BRC, BRD, BRE, BRF	09/86 ⇨ 10/94
SCORPIO I 2.9 i Cat	BRE	10/87 ⇨ 09/94
SCORPIO II 2.9 i	BRG	02/95 ⇨ 08/98
JEEP		
CHEROKEE II 4.0 i	--, 1Z7K, ERH, MX	10/86 ⇨ 09/01
CHEROKEE II 4.0 i 4x4	ERH	01/95 ⇨ 09/01
COMANCHE 4.0 i	1Z7K	10/87 ⇨ 09/90
GRAND WAGONEER 4.0 i	1Z7K	10/86 ⇨ 09/90
WAGONEER 4.0 i	1Z7K	10/86 ⇨ 09/90
WRANGLER 2.5	EPE	12/91 ⇨ 08/96
WRANGLER 4.0	1Z7K, ERH	10/86 ⇨ 08/96

FACET 3.7894RS — 3,5

ROTORS

Adatt./Suitable: ***FORD***

FORD
1 649 200
E7EE-12200-DA

[00] **Eliminated on 04-08-2020. Please verify the availability through our local distributors**
- Eliminato il 04-08-2020. Verificare la disponibilità presso i nostri distributori
- Eliminé le 04-08-2020. Verifier la disponibilité auprès de nos distributeurs sur place
- Am 04-08-2020 gestrichen. Evtl. Verfügbarkeit bitte bei unseren Händlern prüfen
- Eliminado en fecha 04-08-2020. Verificar la disponibilidad a través de nuestros distribuidores locales

[212] **Resistance Rotor [Ohm] 1000**
- Rotore resistenza [Ohm] 1000
- Résitance roteur [ohm] 1000
- Widerstand-Rotor [Ohm] 1000
- Resistencia rotor [ohm] 1000

FORD		
SIERRA II 1.8	R2C, R6A	05/88 ⇨ 02/93

FACET 3.7952 — 3

ROTORS

Adatt./Suitable: ***HITACHI***

BOSCH
1 987 234 015
F 005 X04 557

HITACHI
44A2-16001
44R84-16002

HOLDEN
22157H9560
GH605

HONDA
30103-657-005

NISSAN
22149-B8900
22149-N3602
22157-H3602
22157-H9560
22157-N3602
22157-U6001
22157-U6091
22157-U6091MP
22157-U6094
22157-U6094DY

SUBARU
22157-AA030
49101-8711

[03] **Supplied until depletion**
- Fornibile fino ad esaurimento delle scorte
- Fourni jusqu'à épuisement du stock
- Lieferbar solange vorrat reicht
- Suministrado hasta el stock termina

HOLDEN		
ASTRA_LB 1.5	E15	08/84 ⇨ 01/86
ASTRA_LC 1.6	E16S	02/86 ⇨ 06/87
NISSAN		
PULSAR 1.6	E16	01/84 ⇨ 12/86
PULSAR 1.6 [USA]	E16	01/82 ⇨ 12/83
SUBARU		
L-SERIES 1.3	--	01/79 ⇨ 12/87
L-SERIES 1.6	--	01/86 ⇨ 12/87

FACET 3.7956 — 1

ROTORS

Adatt./Suitable: ***HITACHI***

ACURA
30103-PAI-732

BOSCH
1 987 234 042

HONDA
30103-PA1-732
30103-PA1-733
30103-PAI-732
30103-PC3-822
30103-PE9-006

ROVER
GRA2245

[03] **Supplied until depletion**
- Fornibile fino ad esaurimento delle scorte
- Fourni jusqu'à épuisement du stock
- Lieferbar solange vorrat reicht
- Suministrado hasta el stock termina

ACURA		
INTEGRA I 1.6	D16A1	01/85 ⇨ 12/90
INTEGRA I 1.6 i	D16A8	01/85 ⇨ 12/90
HONDA		
ACCORD III 1.6 L	A16A1	11/85 ⇨ 12/89
ACCORD III 2.0	A20A2	01/86 ⇨ 12/86
ACCORD III 2.0 12V	A20A1, A20A3	01/86 ⇨ 12/89
ACCORD III 2.0 16V EXS	B20A2	01/88 ⇨ 12/89
ACCORD III 2.0 EX	A20A1, A20A2	11/85 ⇨ 12/89
ACCORD III 2.0 EXi	A20A3, A20A4	11/85 ⇨ 12/89
ACCORD III 2.0 i 16V	B20A2, B20A8	01/87 ⇨ 12/89
ACCORD VI 1.6	A16A5	10/98 ⇨ 12/02
CIVIC II 1.3 [USA]	--	01/81 ⇨ 12/83
CIVIC III 1.5 i Si [USA]	--	01/84 ⇨ 12/87
JAZZ I 45 1.2	ER2	02/84 ⇨ 10/86
ROVER		
200 I 213 S	EV2	09/85 ⇨ 09/89

FACET 3.7966 — 04

ROTORS

Adatt./Suitable: ***HITACHI***

NISSAN
22157-18F00
22157-20R00

[03] **Supplied until depletion**
- Fornibile fino ad esaurimento delle scorte
- Fourni jusqu'à épuisement du stock
- Lieferbar solange vorrat reicht
- Suministrado hasta el stock termina

NISSAN		
200 SX 1.8i Turbo	CA18ET	01/87 ⇨
BLUEBIRD 2.0 i	CA20E	04/84 ⇨ 12/90
PICK UP I 2.4 [USA]	Z24i	01/85 ⇨ 12/89
STANZA 2.0 [USA]	CA20	01/82 ⇨ 12/87
TERRANO I 2.4 i 4WD	Z24i	10/87 ⇨ 02/93
URVAN III 2.4 i	Z24i	05/89 ⇨ 09/93
VAN 2.4 [USA]	Z24i	01/86 ⇨ 12/89
VANETTE II 2.0	Z20S	07/87 ⇨ 08/94

FACET 3.7969 — 1

ROTORS

Adatt./Suitable: ***HITACHI***

BOSCH
F 005 X04 502

GENERAL MOTORS
94 174 468

HOLDEN
8941744680

HONDA
8-94174-468-0

ISUZU
8-94174468-0

OPEL
43 12 974

HOLDEN		
JACKAROO_UBS 2.6i 4x4	4ZE1	11/88 ⇨ 12/91
RODEO_TF 2.6i	4ZE1	08/88 ⇨ 03/96
RODEO_TF 2.6i 4x4	4ZE1	08/88 ⇨ 03/96
HONDA		
PASSPORT 2.6 i [USA]	4ZE1	01/94 ⇨
ISUZU		
AMIGO 2.6i [USA]	RLJ	01/88 ⇨
PICK-UP 2.6i [USA]	RLJ	01/88 ⇨
RODEO 2.6i [USA]	RLJ	01/90 ⇨
TROOPER 2.6 4WD	4ZE1	11/86 ⇨ 07/91
TROOPER 2.6 i	4ZE1	10/87 ⇨ 12/91
OPEL		
CAMPO 2.3	23P	08/94 ⇨ 09/96

FACET 3.7970 — 3,5

ROTORS

Adatt./Suitable: ***HITACHI***

BOSCH
1 987 234 050
1 987 234 052

FORD
1 953 279

NISSAN
22157-17B00
22157-21E00
22157-21E01
22157-21F01
22157-27M02
22157-40F00
22157-55Y00
22157-71J00
22157-78A00

[03] **Supplied until depletion**
- Fornibile fino ad esaurimento delle scorte
- Fourni jusqu'à épuisement du stock
- Lieferbar solange vorrat reicht
- Suministrado hasta el stock termina

FORD		
MAVERICK 2.4 i	KA24E	02/93 ⇨ 08/96
NISSAN		
100NX 1.6	GA16DS	03/90 ⇨ 10/94
BLUEBIRD 1.8 Turbo	CA18T	04/84 ⇨ 11/92
BLUEBIRD 2.0 i	CA20E	04/84 ⇨ 12/90
NX1600 1.6i [USA]	GA16, GA16DE	01/88 ⇨ 12/92
PICK UP I 2.4 i [USA]	KA24E	01/89 ⇨
PICK UP I 2.4 i 12V	KA24E	04/92 ⇨ 02/98
PICK UP I 2.4 i 12V 4WD	KA24E	04/92 ⇨ 02/98
PRIMERA I 1.6	GA16DS	06/90 ⇨ 01/96
PRIMERA I 1.6 i	GA16DS	07/90 ⇨ 03/98
PULSAR NX 1.6 [USA]	GA16	01/88 ⇨
SENTRA III 1.6i [USA]	GA16DE	01/90 ⇨ 12/92
SILVIA 1.8	--	01/84 ⇨
SUNNY II 1.6 i 12V	GA16i	06/86 ⇨ 06/91

NISSAN		
SUNNY III 1.6 16V 4x4	GA16DS	11/90 ⇨ 05/95
SUNNY III 1.6 i	GA16DE, GA16DS	10/90 ⇨ 03/00
SUNNY III 1.6 i 16V 4WD	GA16DE, GA16DS	10/90 ⇨ 06/95
SUNNY III 1.6 i 16V 4x4	GA16DE	10/92 ⇨ 03/00
TERRANO II 2.4 4WD	KA24E	05/96 ⇨ 09/07
TERRANO II 2.4 i 12V 4WD	KA24E	02/93 ⇨ 12/97

FACET 3.7973

1

ROTORS

Adatt./Suitable: ***HITACHI***

BOSCH
1 987 234 031
FORD
E7GZ-12200-A
HITACHI
43S85-16001
43S86-16001
44R86-16001
HONDA
30103-PE1-731
MAZDA
B601-18-V05
Motorcraft
DRE 381
NISSAN
22157-KA030
SUBARU
22157-AA040
22157-KA010
22157-KA030
SUZUKI
33310-75F00
33310-75F00-000

[03] **Supplied until depletion**
- Fornibile fino ad esaurimento delle scorte
- Fourni jusqu'à épuisement du stock
- Lieferbar solange vorrat reicht
- Suministrado hasta el stock termina

MAZDA		
323 V 1.6	93AF1006, B6E	09/86 ⇨ 10/95
323 V 1.6 GT	93AF1006	01/86 ⇨ 10/89
323 V 1.6i	B681, B682	06/86 ⇨ 07/87
323 V 1.6i 16v 4x4	B595	06/86 ⇨ 07/87
SUBARU		
J-SERIES 1.0i EFC-SYS	--	01/89 ⇨
J-SERIES 1.2	--	01/87 ⇨ 12/91
J-SERIES 1.2 SDX	--	01/89 ⇨ 12/91
J-SERIES 1.2i EFC-SYS	--	01/89 ⇨
JUSTY 1.2 [USA]	--	01/87 ⇨ 12/92
L-SERIES 1.6	--	01/87 ⇨ 12/91
TRENDY 1.0	EF10	08/86 ⇨ 05/95
TRENDY 1.2 12v	EF12	06/86 ⇨ 08/95
SUZUKI		
WAGON R II 1.0	K10A	02/98 ⇨ 05/00
WAGON R II 1.2	K12A	02/98 ⇨ 05/00
WAGON R II 1.2 4WD	K12A	02/98 ⇨ 05/00

FACET 3.7981

3

ROTORS

Adatt./Suitable: ***HITACHI***

HONDA
30103-P01-005
30103-PM0-B01
30103-PM3-015
30103-PM3-025

[00] **Eliminated on 12-01-2022. Please verify the availability through our local distributors**
- Eliminato il 12-01-2022. Verificare la disponibilità presso i nostri distributori
- Eliminé le 12-01-2022. Verifier la disponibilité auprès de nos distributeurs sur place
- Am 12-01-2022 gestrichen. Evtl. Verfügbarkeit bitte bei unseren Händlern prüfen
- Eliminado en fecha 12-01-2022. Verificar la disponibilidad a través de nuestros distribuidores locales

HONDA		
ACCORD IV 1.8	--	01/90 ⇨ 12/91
ACCORD IV 2.0 16V	F20A2, F20A3, F20A6	01/90 ⇨ 03/93
CIVIC V 1.3	D13B2	01/92 ⇨ 12/92
CIVIC V 1.3 16V	D13B2	10/91 ⇨ 11/95
CIVIC IV 1.2	D12B1	01/88 ⇨ 12/91
CIVIC IV 1.3	D13B1	10/87 ⇨ 12/89
CIVIC IV 1.3 [USA]	--	09/87 ⇨ 12/89
CIVIC IV 1.3 16V Cat	D13B2	09/89 ⇨ 09/91
CIVIC IV 1.4 L	D14A1	10/87 ⇨ 12/89
CIVIC IV 1.4i 16V	D14A1	01/90 ⇨ 12/91
CIVIC IV SHUTTLE 1.4 i 16V	D14A1	01/88 ⇨ 12/92
CONCERTO 1.4	D14A1	08/89 ⇨ 10/92
CONCERTO 1.6i	D16A	01/90 ⇨ 12/91

FACET 3.7982

1

ROTORS

Adatt./Suitable: ***HITACHI***

ACURA
30103-PM5-A04
BOSCH
1 987 234 063
HONDA
30103-PM5-702
30103-PM5-703
30103-PM5-A02
30103-PM5-A04
30103-PR3-006
ROVER
GRA2287

ACURA		
INTEGRA I 1.6	D16A1	01/85 ⇨ 12/90
INTEGRA I 1.6 i	D16A8	01/85 ⇨ 12/90
HONDA		
CIVIC IV 1.5	D15B1	01/88 ⇨ 12/89
CIVIC IV 1.5 i 16V	D15B2	10/87 ⇨ 09/91
CIVIC IV 1.6 16V 4x4	D16A6	11/87 ⇨ 09/91
CIVIC IV 1.6 i 16V	D16A6, D16A9, D16Z2	09/87 ⇨ 09/91
CIVIC IV 1.6 i 16V 4x4	D16A6, D16Z2	01/89 ⇨ 12/91
CIVIC IV 1.6i 16V	D16A7, D16A8, D16A9	01/88 ⇨ 05/92
CIVIC IV 1.6i 16V 4WD	D16A1, D16Z2	01/88 ⇨ 12/91
CIVIC IV SHUTTLE 1.5 i 16V	D15B2	01/88 ⇨ 11/91
CIVIC IV SHUTTLE 1.6 4x4	D16A, D16A7	01/88 ⇨ 12/92
CIVIC IV SHUTTLE 1.6 i 16V 4WD	D16A6	01/88 ⇨ 02/95
CIVIC IV SHUTTLE 1.6i 16V 4WD	D16Z2	01/88 ⇨ 12/92
CIVIC V 1.5	D15B2	01/92 ⇨ 12/92

HONDA		
CONCERTO 1.5 i	--	01/90 ⇨ 12/91
CONCERTO 1.6i DOHC	--	01/90 ⇨ 12/91
CONCERTO 1.6i SOHC	--	01/90 ⇨ 12/91
CRX II 1.6 i 16V	D16A9, D16Z5	10/87 ⇨ 02/92
ROVER		
200 II 216 GSi	1GH5E-180, D16A7	10/89 ⇨ 12/95
200 II 216 GTi	D16A8, D16A9	01/90 ⇨ 10/95
400 I 416 GTI/GTE	D16A9	04/90 ⇨ 04/95

FACET 3.7985

3

ROTORS

Adatt./Suitable: ***HITACHI***

BOSCH
1 987 234 053
INFINITI
22157-70J00
Motorcraft
ADR 5050
NISSAN
22157-30R00
22157-54C01
22157-70J00
22157-70J01

[03] **Supplied until depletion**
- Fornibile fino ad esaurimento delle scorte
- Fourni jusqu'à épuisement du stock
- Lieferbar solange vorrat reicht
- Suministrado hasta el stock termina

INFINITI		
G20 2.0	SR20DE	01/90 ⇨ 12/97
NISSAN		
100NX 2.0	SR20DE	10/90 ⇨ 10/94
100NX 2.0 GTI	SR20DE	03/91 ⇨ 10/94
PRAIRIE PRO 2.4 i	KA24E	01/90 ⇨ 07/94
PRAIRIE PRO 2.4 i 4x4	KA24E	04/92 ⇨ 07/94
PRIMERA I 2.0	SR20DE	06/90 ⇨ 04/93
PRIMERA I 2.0 16V	SR20DI	06/90 ⇨ 01/96
PRIMERA I 2.0 16V 4x4	SR20DI	04/91 ⇨ 06/96
PRIMERA I 2.0 GT	SR20DE	06/90 ⇨ 01/96
PRIMERA I 2.0 GT 4x4	SR20DE	03/91 ⇨ 04/93
PRIMERA I 2.0 i	SR20DE	07/90 ⇨ 03/98
PRIMERA II 2.0 16V	SR20DE	08/99 ⇨ 12/01
SENTRA III 2.0i [USA]	SR20DE	01/90 ⇨
SUNNY III 2.0 GTI 16V	SR20DE	10/90 ⇨ 05/95
SUNNY III 2.0 GTI-R 4x4	SR20DET	10/90 ⇨ 05/95

FACET 3.7986

1

ROTORS

Adatt./Suitable: ***HITACHI***

BOSCH
1 987 234 052
NISSAN
22157-03A00
22157-71J10
22157-77A01

[03] **Supplied until depletion**
- Fornibile fino ad esaurimento delle scorte
- Fourni jusqu'à épuisement du stock
- Lieferbar solange vorrat reicht
- Suministrado hasta el stock termina

NISSAN		
100NX 1.6	GA16DS	03/90 ⇨ 10/94
PRIMERA I 1.6	GA16DS	06/90 ⇨ 01/96
PRIMERA I 1.6 i	GA16DS	07/90 ⇨ 03/98
SUNNY II 1.0 L	E10S	07/86 ⇨ 09/90
SUNNY II 1.3	E13S	06/86 ⇨ 10/91
SUNNY II 1.4 LX	GA14S	10/88 ⇨ 08/91
SUNNY II 1.5	E15S	06/86 ⇨ 10/88
SUNNY II 1.6	E16S	06/86 ⇨ 10/88

NISSAN		
SUNNY III 1.4	GA14DS	10/90 ⇨ 06/95
SUNNY III 1.4 i	GA14DS	10/90 ⇨ 05/95
SUNNY III 1.6 16V 4x4	GA16DS	11/90 ⇨ 05/95
SUNNY III 1.6 i	GA16DE, GA16DS	10/90 ⇨ 03/00
SUNNY III 1.6 i 16V 4WD	GA16DE, GA16DS	10/90 ⇨ 06/95
SUNNY III 1.6 i 16V 4x4	GA16DE	10/92 ⇨ 03/00

FACET 3.7992

3,5

ROTORS

Adatt./Suitable: ***HITACHI***

HONDA
30103-PT2-016

HONDA		
ACCORD IV 2.0 16V	F20A5	01/92 ⇨ 12/93
ACCORD IV 2.0 i 16V	F20A7	01/90 ⇨ 12/93
ACCORD IV 2.2	F22A6	05/92 ⇨ 12/93
ACCORD IV 2.2 i 16V	F22A3, F22A7, F22A8	01/90 ⇨ 12/93
ACCORD IV 2.2 i 16V Automatik	F22A3	01/90 ⇨ 03/93

FACET 3.7993

3,5

ROTORS

Adatt./Suitable: ***HITACHI***

HITACHI
44P88-16001

SUBARU
22157-AA080

[03] **Supplied until depletion**
- Fornibile fino ad esaurimento delle scorte
- Fourni jusqu'à épuisement du stock
- Lieferbar solange vorrat reicht
- Suministrado hasta el stock termina

SUBARU		
LEGACY I 1.8i SPi	--	01/89 ⇨
LEGACY I 1800	EJ18SPI	01/89 ⇨ 07/94
LEGACY I 1800 4WD	EJ18SPI	01/89 ⇨ 07/94

FACET 3.7994

1

ROTORS

Adatt./Suitable: ***HITACHI***

BOSCH
F 005 X04 744
F 005 X04 757

MAZDA
B3C7-18-V05
FS05-18-V05

FORD AUSTRALIA		
TELSTAR 2.0 EFi	FS	10/94 ⇨ 11/96
MAZDA		
121 II 1.3 16V	B3(16V)	11/90 ⇨ 03/96
121 II 1.3 i 16V	B3(16V)	11/90 ⇨ 03/96
626 V 1.8	FP, FP01LP	08/91 ⇨ 04/97
626 V 1.8 i	--, FP	08/91 ⇨ 06/97
626 V 2.0 i	FS	08/91 ⇨ 04/97
626 V 2.0 i 4WD	FS	04/92 ⇨ 04/97
MX-6 2.0	FS	02/92 ⇨ 02/97

FACET 3.7995

3,5

ROTORS

Adatt./Suitable: ***HITACHI***

ACURA
30103-P08-003

BOSCH
1 987 234 064

HONDA
30103-P08-003
30103-P72-003

ROVER
GRA2324
NJE100060

ACURA		
INTEGRA II 1.8	F18A2	10/90 ⇨ 09/93
INTEGRA III 1.8 GS-R	F18C2	10/93 ⇨ 09/01
INTEGRA III 1.8 LS	F18C1	10/93 ⇨ 09/01
INTEGRA III 1.8 Sport	F18C1	10/93 ⇨ 09/01
HONDA		
ACCORD V 1.8 16V	F18A3	01/94 ⇨ 12/95
ACCORD V 2.0	F20B3	09/93 ⇨ 12/97
ACCORD V 2.0 i	F20Z2	03/93 ⇨ 01/96
ACCORD V 2.0 i LS 16V	F20B3	09/93 ⇨ 02/98
ACCORD V 2.0 i S	F20Z1	03/93 ⇨ 01/96
ACCORD V 2.2 i [USA]	--	01/94 ⇨ 12/95
ACCORD V 2.2 i 16V	F22B4	08/95 ⇨ 12/97
ACCORD V 2.2 i ES	F22B5	09/93 ⇨ 02/98
ACCORD V 2.3 i SR	H23A3	03/93 ⇨ 01/96
ACCORD VI 2.2 Type-R	H22A7	02/99 ⇨ 12/02
CIVIC V 1.5	D15B7	08/93 ⇨ 12/95
CIVIC V 1.5 i 16V	D15B2, D15Z1	10/91 ⇨ 11/95
CIVIC V 1.5 i LSi	D15B7	08/93 ⇨ 11/95
CIVIC V 1.6 16V Vtec	D16Z6, D16Z7	10/91 ⇨ 11/95
CIVIC V 1.6 4x4	D16Z7	01/92 ⇨ 10/95
CIVIC V 1.6 EX	D16A7	08/93 ⇨ 10/95
CIVIC V 1.6 i	D16Y7	01/94 ⇨ 11/95
CIVIC V 1.6 i Vtec	B16A2, D16Z9	01/94 ⇨ 03/96
CIVIC V 1.6 VTi	B16A2	10/91 ⇨ 11/95
CIVIC V 1.6 VTi 16V	B16A2	10/91 ⇨ 11/95
BALLADE 1.6i	B16A6	01/97 ⇨ 02/01
BALLADE 1.8 i	B18B4	01/96 ⇨ 02/01
CIVIC IV 1.6i	--	01/90 ⇨ 12/91
CIVIC VI 1.4 i	D14A2, D14A5, D14Z2	06/95 ⇨ 02/01

HONDA		
CIVIC VI 1.4 i S	D14Z2	11/95 ⇨ 02/01
CIVIC VI 1.4i 16V	D14Z1	11/98 ⇨ 03/01
CIVIC VI 1.5 i	D15Z6	11/95 ⇨ 02/01
CIVIC VI 1.5 i Vtec-E	D15Z3	09/94 ⇨ 01/97
CIVIC VI 1.6	--	05/96 ⇨ 04/99
CIVIC VI 1.6 i	D16Y3	09/94 ⇨ 03/00
CIVIC VI 1.6 i Vtec	B16A2, D16Y2, D16Y8	09/94 ⇨ 02/01
CIVIC VI 1.6 VTi	B16A2	11/95 ⇨ 02/01
CIVIC VI 1.6i 16V	D16Y7	01/96 ⇨
CIVIC VI 1.6i 16V Vtec	D16Y8	01/96 ⇨ 09/99
CR-V I 2.0	B20Z1	04/99 ⇨ 02/02
CR-V I 2.0 16V 4WD	B20B, B20Z1	10/95 ⇨ 02/02
CR-V I 2.0 i 16V	B20B3, B20B4, B20B9, B20Z3	02/97 ⇨ 04/99
CRX III 1.6 ESi	D16Y8, D16Z6	03/92 ⇨ 12/98
CRX III 1.6 i VTi	B16A2	03/92 ⇨ 12/98
HR-V 1.6 16V	350Y	03/99 ⇨
HR-V 1.6 16V 4WD	350Y, D16W5	03/99 ⇨
HR-V 1.6i 16V	D16W2	04/99 ⇨
INTEGRA 1.8 i	B18B1	01/98 ⇨
LOGO 1.3	D13B7	03/99 ⇨ 03/02
PRELUDE IV 2.0 i 16V	F20A4	02/92 ⇨ 09/96
PRELUDE IV 2.2 i 16V Vtec	H22A2	02/93 ⇨ 09/96
PRELUDE IV 2.3 i 16V	H23A2	02/92 ⇨ 09/96
PRELUDE V 2.0 16V	F20A4	10/96 ⇨ 10/00
PRELUDE V 2.2 16V	H22A5	10/96 ⇨ 10/00
PRELUDE V 2.2 i 16V	F22A2	10/96 ⇨ 10/01
PRELUDE V 2.2 i 16V VTi-R	H22A4, H22A8, H22Z1	10/96 ⇨ 12/98
PRELUDE V 2.2 Si	F22Z6	03/97 ⇨ 07/02
SHUTTLE 2.2 16V	F22B8	10/94 ⇨ 02/98
ROVER		
400 II 416 Si	D16Y2	03/95 ⇨ 03/00
600 618 i/Si	F18A3	03/96 ⇨ 02/99
600 620 i	F20Z2	08/93 ⇨ 06/96
600 620 Si	F20Z1	08/93 ⇨ 02/99
600 623 Si	H23A3	08/93 ⇨ 06/99

FACET 3.7997RS

3,5

ROTORS

Adatt./Suitable: ***HITACHI***

ACURA
30103-PW0-G02

HONDA
30103-PW0-G02
30103-PW0-G03

[00] **Eliminated on 22-02-2022. Please verify the availability through our local distributors**
- Eliminato il 22-02-2022. Verificare la disponibilità presso i nostri distributori
- Eliminé le 22-02-2022. Verifier la disponibilité auprès de nos distributeurs sur place
- Am 22-02-2022 gestrichen. Evtl. Verfügbarkeit bitte bei unseren Händlern prüfen
- Eliminado en fecha 22-02-2022. Verificar la disponibilidad a través de nuestros distribuidores locales

[212] **Resistance Rotor [Ohm] 25**
- Rotore resistenza [Ohm] 25
- Résitance roteur [ohm] 25
- Widerstand-Rotor [Ohm] 25
- Resistencia rotor [ohm] 25

ACURA		
INTEGRA II 1.8	F18A2	10/90 ⇨ 09/93
INTEGRA III 1.8 LS	F18C1	10/93 ⇨ 09/01
INTEGRA III 1.8 Sport	F18C1	10/93 ⇨ 09/01
HONDA		
CIVIC IV 1.6i	--	01/90 ⇨ 12/91

FACET 3.7998

1

ROTORS

Adatt./Suitable: ***HITACHI***

HONDA
30103-P0A-A01
30103-PAA-A01
30103-PDA-E01

ISUZU
5-86202573-0

ROVER
GRA2327
NJI100030

HONDA		
ACCORD V 1.9 i	F18A3	02/96 ⇨ 10/98
ACCORD V 2.0 i LS	F20Z1	02/96 ⇨ 10/98
ACCORD V 2.2	F22B1, F22Z2	10/93 ⇨ 12/97
ACCORD V 2.2 16V	F22Z1	01/96 ⇨ 09/98
ACCORD V 2.2 i [USA]	--	01/94 ⇨ 12/95
ACCORD V 2.2 i VTEC	F22Z2	02/96 ⇨ 10/98
ACCORD VI 1.8 16V Vtec	3B630WM, F18B3	04/99 ⇨
ACCORD VI 1.8 i	3B630WM	10/98 ⇨ 12/02
ACCORD VI 1.8 i 16V Vtec	F18B4	11/98 ⇨ 12/99
ACCORD VI 2.0	F20B6	11/99 ⇨ 12/02
ACCORD VI 2.0 16V Vtec	F20B6	04/99 ⇨
ACCORD VI 2.0 i	F20B6	10/98 ⇨ 01/01
ACCORD VI 2.0 i 16V	F20B5, F20B7	02/98 ⇨ 06/03
ACCORD VI 2.3	F23Z5	11/00 ⇨ 06/03
ACCORD VI 2.3 i 16V Vtec	F23Z5	11/00 ⇨
ACCORD VI 2.3 VTi	F23A3	02/98 ⇨ 10/02
CIVIC VI 1.4 i	D14A2, D14A5	06/95 ⇨ 02/01
CIVIC VI 1.4i 16V	D14Z3, D14Z4	11/98 ⇨ 12/00
CIVIC VI 1.4i 16V Vtec	D14Z4	01/99 ⇨
CIVIC VI 1.5 16V	D15Z8	01/97 ⇨ 02/01
CIVIC VI 1.6	D16W4	11/98 ⇨ 03/01
CIVIC VI 1.6 i	D16Y3	09/94 ⇨ 02/01
CIVIC VI 1.6 i Vtec	D16Y6	11/95 ⇨ 02/01
CIVIC VI 1.6i 16V	D16W3	11/98 ⇨ 12/00
CIVIC V 1.6 i Vtec	D16Y6	01/94 ⇨ 03/96
ODYSSEY 2.2	F22B6	01/95 ⇨ 12/97
ODYSSEY 2.3	F23A	10/97 ⇨ 09/03
ODYSSEY 2.3 4x4	F23A	10/97 ⇨ 09/03
ODYSSEY 2.3 i 16V Vtec	F23A8	01/98 ⇨
SHUTTLE 2.3 16V	F23A7, F23A8	10/97 ⇨ 06/04
ROVER		
400 II 416 Si	D16Y2	03/95 ⇨ 03/00
600 618 i/Si	F18A3	03/96 ⇨ 02/99
600 620 i	F20Z2	08/93 ⇨ 06/96
600 620 Si	F20Z1	08/93 ⇨ 02/99

FACET 3.8002

3,5

ROTORS

Adatt./Suitable: ***HITACHI***

FORD
1 960 491 *℄

FORD AUSTRALIA
F S90-18-V05

HONDA
30103-P2A-J01

MAZDA
FS90-18-V05

NISSAN
22157-4B000
22157-72B00

ROVER
NJE100100

*℄ **Available rotor only-not, the distributor assy**

- Fornito solo distributore rotante, non lo spinterogeno completo
- Disponible seulement le rotor, non pas l'allumeur complet
- Erhältlich nur rotor, nicht der komplette verteiler
- Disponible solo el rotor, no el distribuidor completo

FORD		
MAVERICK 2.4 i	KA24	09/96 ⇨ 04/98
FORD AUSTRALIA		
TELSTAR 2.0 EFi	FS	10/94 ⇨ 11/96
HONDA		
BALLADE 1.5	D15Z4	01/97 ⇨
BALLADE 1.6i	D16Y9	01/96 ⇨ 02/01
CIVIC VI 1.4	D14A4	11/95 ⇨ 10/98
CIVIC VI 1.4 16V	D14A7, D14A8	01/97 ⇨ 02/01
CIVIC VI 1.4 i	D14A3, D14A4, D14A8, D14Z1	06/95 ⇨ 02/01
CIVIC VI 1.4 i S	D14A4	11/95 ⇨ 02/01
CIVIC VI 1.4i	D14A6	01/99 ⇨
CIVIC VI 1.6 16V	D16B2	01/97 ⇨ 02/01
MAZDA		
626 V 1.8	FP, FP01LP	08/91 ⇨ 04/97
626 V 1.8 i	--, FP	08/91 ⇨ 06/97
626 V 2.0 i	FS	08/91 ⇨ 04/97
626 V 2.0 i 4WD	FS	04/92 ⇨ 04/97
MX-6 2.0	FS	02/92 ⇨ 02/97
NISSAN		
ALMERA I 1.4	GA14DE	09/95 ⇨ 07/00
ALMERA I 1.4 GX,LX	GA14DE	09/95 ⇨ 07/00
ALMERA I 1.4 S, GX, LX	GA14DE	09/95 ⇨ 03/00
ALMERA I 1.6	GA16DE	07/95 ⇨ 07/00
ALMERA I 1.6 SLX	GA16DE	09/95 ⇨ 07/00
ALMERA I 1.6 SR, SLX	GA16DE	09/95 ⇨ 03/00
MICRA II 1.0 i 16V	CG10DE	08/92 ⇨ 07/00
MICRA II 1.3 i 16V	CG13DE	08/92 ⇨ 09/00
TERRANO II 2.4 4WD	KA24E	05/96 ⇨ 09/07
TERRANO II 2.4 i 12V 4WD	KA24E	02/93 ⇨ 12/97
ROVER		
400 II 416 Si	D16Y2	03/95 ⇨ 03/00

FACET 3.8106

1

ROTORS

Adatt./Suitable: ***LUCAS***

FIAT
31322322
631322322

GENERAL MOTORS
7 992 214

LAND ROVER
RTC3612

Motorcraft
ADR 71
EDR 2
EDR 2 D

AUSTIN		
1000-SERIES 1100	--	01/70 ⇨ 12/74
1000-SERIES 1300	--	01/70 ⇨ 12/74
1000-SERIES 1300 GT	--	01/70 ⇨ 12/74
ALLEGRO 1.1	10H	05/73 ⇨ 10/81
ALLEGRO 1.3	12H	05/73 ⇨ 03/82
ALLEGRO 1.5 Super	14H	05/73 ⇨ 03/82
APACHE 1300	--	11/71 ⇨ 10/74
APACHE 1300 TC	--	11/71 ⇨ 10/74
MAXI 1500	--, 14H	04/69 ⇨ 07/80
MAXI 1750	17H	04/69 ⇨ 10/80
MAXI 1750 HL	--, 17LA	10/72 ⇨ 10/80
MINI 1.3	12HC	09/69 ⇨ 09/80
MINI 1000	--, 99H	10/67 ⇨ 09/84
MINI 1275 GT	12H	10/69 ⇨ 08/80
MINI 850	--	01/60 ⇨ 12/69
MINI I 1.0	--	09/62 ⇨ 08/69
MINI I 1.1	--	11/62 ⇨ 08/64
MINI I 1.3	--	09/62 ⇨ 08/69
MINI I 850	781Y	06/59 ⇨ 08/69
MINI I Cooper	99H	01/61 ⇨ 12/67
MINI I Cooper S	--	09/62 ⇨ 12/71
AUSTIN-HEALEY		
SPRITE MK.III 1.1	--	03/64 ⇨ 09/66
SPRITE 1.3	--, 12CC	03/66 ⇨ 10/71
BOND		
EQUIPE 1300 GT	--	01/67 ⇨ 12/70
FORD		
CORSAIR 1.5	EV15LN, EV15N	10/63 ⇨ 09/65
CORSAIR 1.5 GT	EV15LH	10/63 ⇨ 09/65
CORTINA 1200	--	10/62 ⇨ 09/66
CORTINA 1500	--	10/62 ⇨ 09/66
CORTINA 1500 GT	--	10/62 ⇨ 09/66
CORTINA GT	--	10/62 ⇨ 09/66
CORTINA Lotus	--	10/62 ⇨ 09/70
CORTINA Lotus Spezial	--	10/62 ⇨ 09/66
ESCORT I RS 1600	--, BDA	01/70 ⇨ 10/74
ESCORT I Twin Cam	K5	03/68 ⇨ 08/71
ESCORT II 1.6 RS	LC	12/74 ⇨ 08/80
ESCORT II 1.8	--	12/74 ⇨ 08/80
ESCORT II RS 1800	KL18S	03/75 ⇨ 08/77
ZEPHYR 1.7	--, EL17L	03/62 ⇨ 03/68
GINETTA		
G15 0.9	--	01/67 ⇨ 12/75
JENSEN		
GT 2.0	--	06/75 ⇨ 12/76
HEALEY 2.0	--	01/72 ⇨ 12/75
LAND ROVER		
88/109 2.3 4x4	10H, 11H	09/61 ⇨ 12/86
MG		
1300 MK.II 1300	--	09/67 ⇨ 09/70
MAGNETTE 1.5	--	01/53 ⇨ 04/58
MAGNETTE 1.6	--	03/61 ⇨ 09/68
MGA 1.5	--	05/55 ⇨ 04/60
MGA 1.6	--	01/58 ⇨ 07/62
MGB 1.8	--	05/62 ⇨ 12/80
MGB GT 1.8	--, 18G	07/65 ⇨ 11/80
MGY 1.3	--	01/50 ⇨ 12/51
MIDGET 1.1	--	01/64 ⇨ 12/66
MIDGET 1.3	--	01/67 ⇨ 09/74
MORRIS		
MARINA 1.8	--	04/71 ⇨ 12/79
MARINA 1.8 TC	--	04/71 ⇨ 09/75
MARINA 1300	--	04/71 ⇨ 06/80
MARINA 1800	--	04/71 ⇨ 12/75
MARINA 1800 TC	--	04/71 ⇨ 12/75
MINOR 0.9	--	11/55 ⇨ 12/62
MINOR 1.1	--	01/62 ⇨ 10/71
OXFORD 1.5	--	11/59 ⇨ 09/62
OXFORD 1.7	--	05/62 ⇨ 04/70
RELIANT		
REBEL 700	--	01/68 ⇨ 08/71
REBEL 750	--	08/71 ⇨ 12/73
ROBIN 850	--	11/73 ⇨ 10/02
RILEY		
4/72 1.7	--	03/61 ⇨ 10/68
ELF 1.0	--	03/63 ⇨ 10/68
KESTREL 1100	--, 10H	03/65 ⇨ 04/67
KESTREL 1300	12H	03/67 ⇨ 12/69
ROVER		
A60 CAMBRIDGE 1.7	--	01/62 ⇨ 10/69
TALBOT		
AVENGER 1.3	--	02/70 ⇨ 07/81
AVENGER 1.6	--	02/70 ⇨ 07/81
TRIUMPH		
1300 1.3	--	01/65 ⇨ 12/70
1300 1.3 TC	--, GE1EH	01/67 ⇨ 12/70
1500 1.5	--, 1EH, 1EL	10/70 ⇨ 12/74
HERALD 1200	--, AJM	01/61 ⇨ 12/69
HERALD 13/60	--	01/67 ⇨ 12/71
TOLEDO 1300	--	10/70 ⇨ 12/77

TRIUMPH		
TOLEDO 1500	--	10/70 ⇨ 12/77
TOLEDO 1500 TC	--	01/71 ⇨ 12/77
TR 2 2.0	--, HCL	01/53 ⇨ 12/55
TR 3 2.0	--, HCL	12/55 ⇨ 12/57
TR 4 2.0	--	01/61 ⇨ 12/65
TR 3A 2.0	--	12/57 ⇨ 12/61
TR 3A 2.2	--, HE0H	01/59 ⇨ 12/61
TR 4A 2.2	--, HE0H	12/65 ⇨ 12/67
TVR		
VIXEN 1800	--	01/68 ⇨ 12/68
WOLSELEY		
16/60 1.6	--	01/61 ⇨ 12/71
18/85 1.8	--, 18HL	08/69 ⇨ 12/72
18/85 1.8 S	--, 18HH	01/70 ⇨ 12/72
1300 1.3	--, 12H	01/68 ⇨ 10/71
1300 1.3 TC	--, 12H	10/71 ⇨ 10/73
HORNET 1.0	--, 99LFD	01/61 ⇨ 12/70

FACET 3.8107

1

ROTORS

Adatt./Suitable: ***LUCAS***

FORD
EOTT-A1220-0A
EOTT-A1220-0B
EOTT-A1220-0C

GENERAL MOTORS
7 992 216

LAND ROVER
262704

Motorcraft
ADR 76

VAUXHALL
7079424
7101586

ASTON MARTIN		
DB6 4.0	--, AJ6	10/64 ⇨ 12/70
DBS 4.0	--, AJ6	01/66 ⇨ 12/72
AUSTIN-HEALEY		
3000 3.0 Sport	--	03/64 ⇨ 10/68
BOND		
EQUIPE 2.0 GT	--	01/68 ⇨ 12/71
DAIMLER		
2.8 - 5.3 Sovereign 2.8	--	10/69 ⇨ 05/75
2.8 - 5.3 Sovereign 4.2	--	10/69 ⇨ 03/79
FORD		
ZEPHYR 2.0	EV20A, EV20B	03/68 ⇨ 10/72
ZEPHYR 2.5	EL25L, EL25, EV25B, EV25L	03/62 ⇨ 10/72
ZEPHYR 3.0	EV30A, EV30B	03/68 ⇨ 10/72
ZODIAK 2.5	EL25HV, EL25LV	03/62 ⇨ 10/72
JAGUAR		
E-TYPE 3.8	--	04/61 ⇨ 07/64
E-TYPE 4.2	--, 8L(85-87), XK4.2(82-87)	05/64 ⇨ 04/75
E-TYPE 2+2 4.2	7L, 8LC	06/66 ⇨ 04/75
I 2.4	--	09/55 ⇨ 09/59
I 3.4	--	09/55 ⇨ 09/59
II 240	--	09/59 ⇨ 10/69
II 3.8 S	--	09/59 ⇨ 09/66
II 340	--	09/55 ⇨ 10/70
IX 3.8	--	10/58 ⇨ 07/61
X 3.4	--	10/61 ⇨ 10/64
X 4.2	--	09/61 ⇨ 07/68
X 420	--	09/67 ⇨ 10/69
X 420G	--	09/66 ⇨ 10/70
S-TYPE 3.4	--	05/63 ⇨ 08/68
S-TYPE 3.8	--	05/63 ⇨ 08/68
XJ 2.8	--	10/68 ⇨ 10/73
XJ 6 2.8	--	09/68 ⇨ 10/75
XJ 6 4.2	XK4.2(-79)	10/69 ⇨ 05/75
XK 120	--	01/50 ⇨ 10/54
XK 150	--	09/57 ⇨ 10/60
XK 150 S	--	09/57 ⇨ 10/60
MG		
MGC 3.0	--	01/67 ⇨ 09/69
MGC GT 3.0	--	01/67 ⇨ 09/69
TRIUMPH		
2.5 PI 2.5	--, 25PI	01/68 ⇨ 12/75

TRIUMPH		
2000 2.0	--, 20TC	01/68 ⇨ 12/75
2000 2.0 TC	--	03/72 ⇨ 12/75
TR 5 2.5 PI	--	01/67 ⇨ 12/68
TR 6 2.5	--, CF1, CR1H	03/69 ⇨ 12/76
TR 6 2.5 PI	--	01/69 ⇨ 12/76
VITESSE 1.6	--	01/62 ⇨ 12/67
VITESSE 2.0	--, HB1HE, HB1LE	12/65 ⇨ 12/71
TVR		
2500 2.5	--, CF1	01/72 ⇨ 12/77
WOLSELEY		
SIX 2.2	--	01/72 ⇨ 10/75

FACET 3.8112

1

ROTORS

Adatt./Suitable: ***LUCAS***

BOSCH
1 234 332 848

FIAT
59321324
659321324

GENERAL MOTORS
7 992 996

INNOCENTI
659321324

JAGUAR
AEU 1501
JLM 9623

LAND ROVER
RTC3339
RTC3614

LEYLAND
GRA114

RENAULT
77 01 025 237

ROVER
GRA114

TALBOT
7506 37 64

INNOCENTI		
MINI 120	--	01/75 ⇨ 12/83
JAGUAR		
XJ 4.2i Series 3	--	01/86 ⇨ 12/94
LAND ROVER		
90 2.5 4x4	17H	09/85 ⇨ 08/90
110/127 2.5 4x4	17H	10/85 ⇨ 07/90
DEFENDER 2.25	--	01/87 ⇨
DEFENDER 2.5 90, 110	--	08/90 ⇨ 09/01
ROVER		
MINI 1.0	--	01/85 ⇨

FACET 3.8114

1

ROTORS

Adatt./Suitable: ***LUCAS***

FORD
A790-X12200-RA

LAND ROVER
RTC3613

Motorcraft
EDR 92

[03] **Supplied until depletion**
- Fornibile fino ad esaurimento delle scorte
- Fourni jusqu'à épuisement du stock
- Lieferbar solange vorrat reicht
- Suministrado hasta el stock termina

FACET 3.8121

1

ROTORS

Adatt./Suitable: ***LUCAS***

LAND ROVER
RTC3618

[03] **Supplied until depletion**
- Fornibile fino ad esaurimento delle scorte
- Fourni jusqu'à épuisement du stock
- Lieferbar solange vorrat reicht
- Suministrado hasta el stock termina

LAND ROVER		
DEFENDER 3.5 4x4	15G, 21G, 22D	09/90 ⇨ 12/98

FACET 3.8122

1

ROTORS

Adatt./Suitable: ***LUCAS***

BOSCH
F 005 X04 636

LAND ROVER
RTC3199
RTC6629
STC1857

LAND ROVER		
DEFENDER 3.5 4x4	15G, 21G, 22D	09/90 ⇨ 12/98
DISCOVERY I 3.5	--	09/89 ⇨ 06/94
DISCOVERY I 3.5 4x4	22D	06/89 ⇨ 06/94
DISCOVERY I 4.0 4x4	35D, 36D	09/93 ⇨ 10/98
RANGE ROVER I 3.5 4x4	31D	01/87 ⇨ 09/90
RANGE ROVER I 3.5 Vogue 4x4	24D, 25D	10/85 ⇨ 09/90
RANGE ROVER I 3.9 4x4	35D	11/88 ⇨ 12/92
RANGE ROVER I 3.9 Cat 4x4	37D, 38D	11/88 ⇨ 07/94
RANGE ROVER I 3.9 Vogue SEI 4x4	35D, 36D	11/88 ⇨ 07/94
RANGE ROVER I 4.3 Vogue LSE 4x4	40D	09/92 ⇨ 07/94

FACET 3.8124RS

1

ROTORS

Adatt./Suitable: ***LUCAS***

ROVER
AUU1690
GRA138
GRA2138
GRA2274

[03] **Supplied until depletion**
- Fornibile fino ad esaurimento delle scorte
- Fourni jusqu'à épuisement du stock
- Lieferbar solange vorrat reicht
- Suministrado hasta el stock termina

[212] **Resistance Rotor [Ohm] 1000**
- Rotore resistenza [Ohm] 1000
- Résitance roteur [ohm] 1000
- Widerstand-Rotor [Ohm] 1000
- Resistencia rotor [ohm] 1000

AUSTIN		
MONTEGO 1.6 LS	16HC37	10/84 ⇨ 08/88
MONTEGO 1.6 LS, HL	16HC37	04/84 ⇨ 08/88
MONTEGO 2.0	20HSC	04/84 ⇨ 08/88
MONTEGO 2.0 Turbo	20HC85	04/84 ⇨ 08/88
ROVER		
200 II 220 GTi	20M4F	09/91 ⇨ 10/95
800 820	--	10/88 ⇨ 10/91
800 820 i/Si	20HD	10/88 ⇨ 12/91
800 820 SI	20HDM16	10/88 ⇨ 12/91
400 I 420 16V	--	01/91 ⇨ 12/92
400 I 420 GTI/GSI/Vitesse	20M4F	02/92 ⇨ 04/95
MAESTRO 1.6	16H	09/90 ⇨ 01/95
MAESTRO 2.0	--	01/86 ⇨
MONTEGO 2.0 GTi	20H	02/85 ⇨ 10/91

FACET 3.8125

1

ROTORS

Adatt./Suitable: ***LUCAS***

ROVER
GRA143
GRA2143

[03] **Supplied until depletion**
- Fornibile fino ad esaurimento delle scorte
- Fourni jusqu'à épuisement du stock
- Lieferbar solange vorrat reicht
- Suministrado hasta el stock termina

AUSTIN		
MONTEGO 1.3	--, 12HL	10/84 ⇨ 08/88
ROVER		
100 / METRO 111 C/L/S	11K2A	03/90 ⇨ 12/98
100 / METRO 114 S/L/GTA	14K2A	03/90 ⇨ 12/98
100 114	14K2A	04/94 ⇨ 10/97
MAESTRO 1.3	12HE	09/90 ⇨ 01/95
MINI 1.3 Cooper	--	01/85 ⇨
MINI 1.3i Cooper	--	01/85 ⇨
MINI 1.3i Turbo	--	01/85 ⇨
MINI 1300	12A2A, 12A2B, 12A2D, 12A2E, 12A2L	01/91 ⇨ 04/95
MONTEGO 1.3	12HL	10/84 ⇨ 10/88

FACET 3.8126RS

1

ROTORS

Adatt./Suitable: ***LUCAS***

FORD
1 655 993
6 153 387
6 182 581
84SF-12200-CA

Motorcraft
EDR 159
EDR 249

[212] **Resistance Rotor [Ohm] 1000**
- Rotore resistenza [Ohm] 1000
- Résitance roteur [ohm] 1000
- Widerstand-Rotor [Ohm] 1000
- Resistencia rotor [ohm] 1000

FORD		
ESCORT IV 1.4	F6D, FUA, FUC	01/86 ⇨ 07/90
FIESTA II 1.6 XR2	LUB, LUD	03/84 ⇨ 02/89
FIESTA III 1.4	F6E	03/89 ⇨ 12/95
ESCORT III 1.4 i	F6D, FUC	02/86 ⇨ 07/90
ORION I 1.4	FUA, FUC	12/85 ⇨ 07/90
ORION I 1.4 Cat	F6D	02/87 ⇨ 07/90
ROVER		
2000-3500 2000	--	10/82 ⇨ 10/86

FACET 3.8127RS

3

ROTORS

Adatt./Suitable: ***LUCAS***

JAGUAR
JLM 381

[212] **Resistance Rotor [Ohm] 1000**
- Rotore resistenza [Ohm] 1000
- Résitance roteur [ohm] 1000
- Widerstand-Rotor [Ohm] 1000
- Resistencia rotor [ohm] 1000

JAGUAR		
XJ 3.6	9DPALA, 9DPANA	10/86 ⇨ 05/91
XJ 4.0	9EPCNA, 9LPFRB	10/89 ⇨ 03/96
XJ 6 3.2 24V	9BPMNA	09/90 ⇨ 11/94
XJ 6 3.6	9DPANA, AJ6(3.6, 156KW)	10/86 ⇨ 08/89
XJ 6 4.0	9EPCNA	09/89 ⇨ 11/94
XJSC 3.6	9DPALA, 9DPANA	08/87 ⇨ 05/91
XJSC 4.0	9EPCNA, 9LPFRB	05/91 ⇨ 03/96

FACET 3.8128RS

1

ROTORS

Adatt./Suitable: ***LUCAS***

BOSCH
F 005 X04 676

GENERAL MOTORS
90 349 877

HOLDEN
90349877

OPEL
12 12 200

[212] **Resistance Rotor [Ohm] 5000**
- Rotore resistenza [Ohm] 5000
- Résitance roteur [ohm] 5000
- Widerstand-Rotor [Ohm] 5000
- Resistencia rotor [ohm] 5000

HOLDEN		
BARINA 1.4 i	C14NZ	04/94 ⇨ 07/97
BARINA_SB 1.2i	C12NZ	04/94 ⇨ 07/97
COMBO 1.4 i	C14NZ	03/96 ⇨ 07/97
COMBO_SB 1.4i	C14NZ	04/94 ⇨ 07/97
OPEL		
ASTRA F 1.4	14SE	09/92 ⇨ 09/98
ASTRA F 1.4 i	C14NZ	09/91 ⇨ 01/05
ASTRA F 1.4 Si	C14SE	03/92 ⇨ 03/01
COMBO B 1.2	C12NZ	07/94 ⇨ 10/01
COMBO B 1.4	C14NZ	07/94 ⇨ 10/01
CORSA A 1.2 i	C12NZ	09/89 ⇨ 03/93
CORSA A 1.4 Si	C14SE	09/91 ⇨ 03/93
CORSA A 1.6 GSI	E16SE	05/88 ⇨ 03/92
CORSA B 1.2 i	12NZ, C12NZ	03/93 ⇨ 09/00
CORSA B 1.4 i	C14NZ	03/93 ⇨ 09/00
KADETT E 1.4 i	C14NZ	01/90 ⇨ 07/94
KADETT E 1.6	16SV	09/86 ⇨ 12/91
KADETT E 1.6 i	16SV	07/89 ⇨ 02/93
KADETT E 1.6 S	16SV	09/86 ⇨ 08/91
VECTRA A 1.6	16SV	09/88 ⇨ 05/93
VECTRA A 1.6 S	16SV	09/88 ⇨ 05/93
VAUXHALL		
ASTRA III 1.4 i	C14NZ, C14SE	03/91 ⇨ 09/98
ASTRAVAN I 1.4 i	C14NZ	09/91 ⇨ 08/95
COMBO B 1.2	C12NZ	07/94 ⇨ 10/01
COMBO B 1.4	C14NZ	07/94 ⇨ 10/01
CORSA B 1.2 i	C12NZ	03/93 ⇨ 09/00
CORSA B 1.4 i	C14NZ	03/93 ⇨ 09/00
CORSAVAN I 1.4 i	C14NZ	01/94 ⇨ 09/00

FACET 3.8129RS

1

ROTORS

Adatt./Suitable: ***LUCAS***

BOSCH
F 005 X04 678

LAND ROVER
NJE10003

ROVER
AUU1641
GRA2285
GRA2310
NJE100070

[212] **Resistance Rotor [Ohm] 1000**
- Rotore resistenza [Ohm] 1000
- Résitance roteur [ohm] 1000
- Widerstand-Rotor [Ohm] 1000
- Resistencia rotor [ohm] 1000

LAND ROVER		
FREELANDER 1.8 16V 4x4	18K4F	04/98 ⇨ 10/06
FREELANDER 1.8 i 16V 4x4	18K4F	02/98 ⇨ 10/06
MG		
MGF 1.8 i 16V	18K4F	03/95 ⇨ 03/02
MG TF 115	16K4F	03/02 ⇨ 12/09
MG TF 120	18K4F	03/02 ⇨ 12/09
MG TF 135	18K4F	03/02 ⇨ 12/09
MG ZR 105	14K4F	06/01 ⇨ 04/05

MG		
MG ZR 120	18K4F	06/01 ⇨ 04/05
ROVER		
25 1.4 16V	14K4F, 14K4M	10/99 ⇨ 05/05
25 1.6 16V	16K4F	10/99 ⇨ 05/05
25 1.8 16V	18K4F	10/99 ⇨ 05/05
100 / METRO 111 C/L/S	11K2D	03/90 ⇨ 12/98
100 / METRO 114 GSi	14K4F	10/94 ⇨ 10/95
100 / METRO 114 GTI 16V	14K4C, 14K4D, 14K4F	03/90 ⇨ 12/98
100 / METRO 114 GTI/GT 16V Cat	14K4C, 14K4D	03/90 ⇨ 12/98
100 / METRO 114 S/L/GTA	14K2D	03/90 ⇨ 12/98
100 111	11K2D	04/94 ⇨ 10/97
100 114	14K2D	04/94 ⇨ 10/97
200 II 214	14K2A, 14K2D	09/93 ⇨ 12/95
200 II 214 1.4	14K4C, 14K4D	01/92 ⇨ 11/99
200 II 214 1.4i 16V	14K4F	01/93 ⇨ 11/99
200 II 214 GSi/Si	14K4C, 14K4F	01/90 ⇨ 10/95
200 II 214 Si/Gsi	14K4C, 14K4D	10/89 ⇨ 10/95
200 II 216	16K4F	01/96 ⇨ 12/97
200 II 216 1.6i 16V	16K4F	01/96 ⇨ 11/99
200 II 220 16V	--	01/92 ⇨ 12/95
200 II 220 GSi	1CA4GA15-01	05/94 ⇨ 06/99
200 II 220 GTi	1CA4GA15-01, 20M4F	09/91 ⇨ 10/95
200 II 220 Turbo	20T4G	10/92 ⇨ 06/99
200 III 211	11K2D	01/98 ⇨ 03/00
200 III 214 i	14K2F	11/95 ⇨ 03/00
200 III 214 Si	14K4F	11/95 ⇨ 03/00
200 III 216 Si	16K4F	11/95 ⇨ 06/99
400 II 414 Si	14K4F	05/95 ⇨ 03/00
400 II 416 Si	16K4F, D16Y2	03/95 ⇨ 03/00
600 620 Ti Vitesse	20T4G	05/94 ⇨ 08/98
800 820 16V Turbo	T16	11/91 ⇨ 02/99
800 820 I/SI	1CA4GA15-01	01/91 ⇨ 02/99
800 820 Sport	20T4G	04/94 ⇨ 03/96
400 I 1.6 i	16K4F, D16A8	05/94 ⇨ 11/98
400 I 414	14K4C	01/93 ⇨ 04/95
400 I 414 GSI/SI	14K4C, 14K4D	04/90 ⇨ 04/95
400 I 414 GSI/SI Cat	14K4F	10/92 ⇨ 04/95
400 I 420 GSI/SLI/GTI/Vite	1CA4GA15-01	01/93 ⇨ 04/95
400 I 420 GTI/GSI/Vitesse	20M4F	02/92 ⇨ 04/95
400 I 420 Turbo	20T4G	01/93 ⇨ 04/95
COUPE 1.6 16 V	16K4F	03/96 ⇨ 11/99

FACET 3.8130

3

ROTORS

Adatt./Suitable: ***LUCAS***

NISSAN
22157-73C00
22157-99B01
22157-99B03

NISSAN		
MICRA II 1.0 i 16V	CG10DE	08/92 ⇨ 07/00
MICRA II 1.3 i 16V	CG13DE	08/92 ⇨ 09/00
PRIMERA II 1.6 16V	GA16DE	09/96 ⇨ 07/02

FACET 3.8229

1

ROTORS

Adatt./Suitable: ***MARELLI***

FEMSA
4765
8415

FIAT
9902725
9908418
9909418
9911960

GENERAL MOTORS
7 992 296
7 992 896

MAGNETI MARELLI
070189501010
701 895 01
S 57/45

SEAT
008415.06

FIAT		
500 0.5	110F.000, 120.000	01/60 ⇨ 12/75
500 0.6	111A000	08/68 ⇨ 01/76
600 0.6	--	03/55 ⇨ 05/61

FACET 3.8236RS

1

ROTORS

Adatt./Suitable: ***MARELLI***

FIAT
4210514
9808037
9919627
9920580
9922446
9934741

GENERAL MOTORS
7 992 304
93 150 396

MAGNETI MARELLI
710 615 01
711 195 01
711 195 02
711 195 04
711 299 01
711 424 01

ZASTAVA
1335055

[03] **Supplied until depletion**
- Fornibile fino ad esaurimento delle scorte
- Fourni jusqu'à épuisement du stock
- Lieferbar solange vorrat reicht
- Suministrado hasta el stock termina

[212] **Resistance Rotor [Ohm] 5000**
- Rotore resistenza [Ohm] 5000
- Résitance roteur [ohm] 5000
- Widerstand-Rotor [Ohm] 5000
- Resistencia rotor [ohm] 5000

FIAT		
128 1.1	128A.000	03/69 ⇨ 12/84
X 1/9 1.3	128AS.000	10/75 ⇨ 06/78
ZASTAVA		
101 1.1	128A.000, 128A.064	05/75 ⇨ 12/93
101 1.1 Super	128AC5.000	07/79 ⇨ 09/81
YUGO 0.9	9A	04/80 ⇨ 06/92

FACET 3.8237

3,5

ROTORS

Adatt./Suitable: ***MARELLI***

BOSCH
1 234 332 808
1 234 332 810
1 234 332 812

FIAT
9913856
9915910
9919348
9921508
9923115
9924654

GENERAL MOTORS
7 992 299
7 992 300
7 992 632

MAGNETI MARELLI
710 640 01
710 640 02
711 214 01
711 323 01

SEAT
121334.06
NG1 323 013 1

[03] **Supplied until depletion**
- Fornibile fino ad esaurimento delle scorte
- Fourni jusqu'à épuisement du stock
- Lieferbar solange vorrat reicht
- Suministrado hasta el stock termina

FIAT		
125 1.6	125A.000	07/67 ⇨ 03/74
131 1.3 Mirafiori	131A6.000	10/74 ⇨ 09/81
131 1.3 Super Mirafiori	131B.000	03/78 ⇨ 12/80
131 1.4 Mirafiori	131C.000, 131C1.000	11/80 ⇨ 01/84
131 1.6	131A1.000	10/74 ⇨ 09/81
131 1.6 Super	131C3.000	03/78 ⇨ 01/84
131 2.0 Super	131C4.000	01/81 ⇨ 12/84
850 0.8	100G.000, 100G.002	07/64 ⇨ 10/72
850 0.8 Special	100GB.000	03/68 ⇨ 10/72
850 0.9 Sport	--, 100GL.040	02/68 ⇨ 12/72
SEAT		
IBIZA I 0.9	09NCA, 146A000	08/90 ⇨ 05/93
MARBELLA 0.9	09NCA, 100GL7000	01/87 ⇨ 12/93

FACET 3.8237RS

3,5

ROTORS

Adatt./Suitable: ***MARELLI***

FIAT
4157304
82301158
82345471
9913857
9916593
9917213
9921476
9934726
9934727
9937729

GENERAL MOTORS
7 992 633

MAGNETI MARELLI
710 861 01
710 930 01
710 930 02
711 215 01
711 215 02
711 539 01

SEAT
NG0 930 023 1
NG1 215 023 1
NG1 539 013 1

[212] **Resistance Rotor [Ohm] 5000**
- Rotore resistenza [Ohm] 5000
- Résitance roteur [ohm] 5000
- Widerstand-Rotor [Ohm] 5000
- Resistencia rotor [ohm] 5000

FIAT		
127 0.9	100GL.000	09/71 ⇨ 12/84
131 1.3 Mirafiori	131A6.000	10/74 ⇨ 09/81
132 1.6	132C.000	05/77 ⇨ 09/82

FIAT		
850 0.8	100G.000	07/64 ⇨ 10/72
ARGENTA 2000	132D1.000	06/78 ⇨ 12/85

FACET 3.8240

1

ROTORS

Adatt./Suitable: ***MARELLI***

FIAT
9926748

MAGNETI MARELLI
071171301010
711 713 01

FIAT		
126 600	126A.000	09/72 ⇨ 06/77
FSO		
126P 0.6	--	09/72 ⇨ 07/77

FACET 3.8241

1

ROTORS

Adatt./Suitable: ***MARELLI***

FEMSA
2443- 1
22431- 1
24431- 1

FIAT
82309214
9924394

GENERAL MOTORS
93 150 398

MAGNETI MARELLI
703 880 03

SEAT
244311.06

[00] **Eliminated on 21-01-2020. Please verify the availability through our local distributors**

- Eliminato il 21-01-2020. Verificare la disponibilità presso i nostri distributori
- Eliminé le 21-01-2020. Verifier la disponibilité auprès de nos distributeurs sur place
- Am 21-01-2020 gestrichen. Evtl. Verfügbarkeit bitte bei unseren Händlern prüfen
- Eliminado en fecha 21-01-2020. Verificar la disponibilidad a través de nuestros distribuidores locales

FIAT		
132 1.6	132C.000	05/77 ⇨ 09/82
ARGENTA 1600	132D.000	04/81 ⇨ 12/85
ARGENTA 1600 i.e	132D.000	04/81 ⇨ 12/85

FACET 3.8242RS

1

ROTORS

Adatt./Suitable: ***MARELLI***

ALFA ROMEO
116 55 05 011 01/01
60730437

CITROËN
2L 548 622 2Y
95 538 865

FIAT
9924187
9928247
9929187

GENERAL MOTORS
93 150 120
93 150 399

MAGNETI MARELLI
711 195 03
711 195 05
711 424 02
712 279 01

SEAT
000 389 806 5
000 993 623 8
NG1 195 053 1
NG1 424 023 1
SE 127914.004A

[03] **Supplied until depletion**

- Fornibile fino ad esaurimento delle scorte
- Fourni jusqu'à épuisement du stock
- Lieferbar solange vorrat reicht
- Suministrado hasta el stock termina

[212] **Resistance Rotor [Ohm] 5000**

- Rotore resistenza [Ohm] 5000
- Résitance roteur [ohm] 5000
- Widerstand-Rotor [Ohm] 5000
- Resistencia rotor [ohm] 5000

[218] **with resistance**

- con resistenza
- avec résistance
- mit Widerstand
- con resistencia

ALFA ROMEO		
ALFETTA 1.8	AR01608X	07/74 ⇨ 04/82
GIULIETTA I 1.3	AR01644	10/77 ⇨ 06/83
FIAT		
127 0.9	100GL.048	06/71 ⇨ 05/83
127 1.0	127A.000	01/77 ⇨ 12/86
131 1.3 Mirafiori	131A6.000	10/74 ⇨ 09/81
132 1.6	132C.000	05/77 ⇨ 09/82
ARGENTA 1600	132D.000	04/81 ⇨ 12/85
ARGENTA 1600 i.e	132D.000	04/81 ⇨ 12/85
FIORINO I 1.0	127A.000	01/80 ⇨ 12/87
FIORINO I 1050	127A.000	01/80 ⇨ 12/87
FIORINO I 900	100GL.000	10/77 ⇨ 10/86
PANDA I 800	100GL6.000	02/81 ⇨ 12/85
PANDA I 950	A112B1.054	09/82 ⇨ 08/83
PANDA I 950 4x4	A112B1.054	09/83 ⇨ 12/86
SEAT		
FURA 0.9	100GL3000	01/82 ⇨ 06/86
MARBELLA 0.8	5K9K718	08/86 ⇨ 12/93
PANDA 34 850	--	01/80 ⇨ 12/83
PANDA 35 850	--	01/80 ⇨ 12/83

FACET 3.8247RS

1

ROTORS

Adatt./Suitable: ***MARELLI***

FIAT
82361915
9936023

INNOCENTI
82361915

LANCIA
9936023

MAGNETI MARELLI
712 372 01
712 378 01

PEUGEOT
5937 29

RENAULT
77 01 025 241

SEAT
000 389 977 0
SE 141914.004B

[212] **Resistance Rotor [Ohm] 5000**

- Rotore resistenza [Ohm] 5000
- Résitance roteur [ohm] 5000
- Widerstand-Rotor [Ohm] 5000
- Resistencia rotor [ohm] 5000

FIAT		
CROMA I 2000 CHT	154A1.000, 154C5.000	12/85 ⇨ 09/92
DUNA 60 1.1	146A6.000	01/87 ⇨ 12/91
DUNA 70 1.3	146A5.000	01/87 ⇨ 12/91
ELBA 1.3	146A5.000	04/91 ⇨ 02/95
FIORINO I 1.1 60	146A9.000	11/86 ⇨ 04/88
FIORINO I 1.3	146A5.000	12/87 ⇨ 08/93
FIORINO II 1.3	146A5.000	01/88 ⇨ 12/94
FIORINO II 60 1.1	146A9.000	05/88 ⇨ 12/93
FIORINO II 70 1.3	146A5.000	01/88 ⇨ 12/94
PANDA I 750	141B.000	01/86 ⇨ 01/95
PANDA I 900	100GL3.000	10/80 ⇨ 06/94
PANDA I 900 CL	146A.048	01/86 ⇨ 12/92
REGATA 1.1 60 , 60 L	138B.000	10/83 ⇨ 08/86
REGATA 1.6	--	10/84 ⇨ 06/89
REGATA 70 1.3	138B2.000, 149A3.000	09/83 ⇨ 07/89
REGATA 85 1.5	149A5.000	05/85 ⇨ 12/87
REGATA 85 1.6	149A.000	10/83 ⇨ 06/90
RITMO I 1.1	146A4.048	04/85 ⇨ 12/87
RITMO I 1.3	149A3.000	11/83 ⇨ 08/85
TIPO I 1.4	160A1.000	07/87 ⇨ 12/89
UNO 45 0.9	146A.000, 146A1.000	03/83 ⇨ 07/96
UNO 45 0.9 Trend	146A.048	09/89 ⇨ 09/92
UNO 60 1.1	146A4.048	05/85 ⇨ 02/92
UNO 60 1.1 SX	--	01/83 ⇨ 12/89
UNO CS 1.1	146A6.000	09/87 ⇨ 09/91
FIAT (BR)		
UNO CS 1116	--	01/88 ⇨
INNOCENTI		
ELBA 1.3	146A5.000	08/91 ⇨ 12/96
LANCIA		
DELTA I 1.1	831B8.000	01/86 ⇨ 12/90
DELTA I 1.3	1831B.000, 3831B.000, 831A2.000, 831B.000	09/79 ⇨ 10/92
PRISMA 1.3	831A2.000	01/83 ⇨ 12/89
PRISMA 1.5	831A1.000	01/83 ⇨ 04/86
PEUGEOT		
305 1.5	117(XR5S)	05/80 ⇨ 09/82
505 2.0	106E(XN1A)	09/85 ⇨ 09/95
RENAULT		
4 1.1	688712	02/78 ⇨ 06/90
9 1.1	C1E715	09/81 ⇨ 05/87
11 1.1	C1E715, C1E720	03/83 ⇨ 06/86
11 1.7	F2N700	10/83 ⇨ 12/87
14 1.4	150	09/79 ⇨ 06/83
RAPID 1.1	C1E750, C1E760	07/85 ⇨ 04/95
SUPER 5 1.0	C1C700	10/84 ⇨ 10/88
SEAT		
IBIZA I 0.9	146A000	08/86 ⇨ 05/93
IBIZA I 1.2	021A1000	11/84 ⇨ 12/93
MALAGA 1.2	021A1000	05/85 ⇨ 12/93
MALAGA 1.5	021A2000	05/85 ⇨ 12/93
MARBELLA 0.9	09NCA	01/87 ⇨ 12/93
TERRA 0.9	09NCA	02/87 ⇨ 12/96

FACET 3.8251RS — 3,5

ROTORS

Adatt./Suitable: ***MARELLI***

ALFA ROMEO
705 390
60749769

MAGNETI MARELLI
711 016 07

[00] **Eliminated on 22-02-2022. Please verify the availability through our local distributors**
- Eliminato il 22-02-2022. Verificare la disponibilità presso i nostri distributori
- Eliminé le 22-02-2022. Verifier la disponibilité auprès de nos distributeurs sur place
- Am 22-02-2022 gestrichen. Evtl. Verfügbarkeit bitte bei unseren Händlern prüfen
- Eliminado en fecha 22-02-2022. Verificar la disponibilidad a través de nuestros distribuidores locales

[212] **Resistance Rotor [Ohm] 5000**
- Rotore resistenza [Ohm] 5000
- Résitance roteur [ohm] 5000
- Widerstand-Rotor [Ohm] 5000
- Resistencia rotor [ohm] 5000

[310] **RPM to [1/min] 6800**
- N° giri fino a [1/min.] 6800
- Régime mot. jusqu'à [1/min] 6800
- Drehzahl bis [1/min] 6800
- vel. giro hasta [1/min] 6800

ALFA ROMEO		
33 I 1.3	AR30168	10/84 ⇨ 12/89
33 I 1.3 i.e.	AR30168	05/83 ⇨ 12/89
33 I 1.5 4x4	AR30508	12/86 ⇨ 03/89
ALFASUD 1.5 ti	AR30128	05/80 ⇨ 06/84

FACET 3.8254RS — 3,5

ROTORS

Adatt./Suitable: ***MARELLI***

ABARTH
9937767

ALFA ROMEO
116 58 05 011 00/02
60731801

FIAT
313220203
6313220203
9937767

GENERAL MOTORS
7 992 874

LANCIA
9937767

MAGNETI MARELLI
710 930 03

MASERATI
313220203
6313220203

SEAT
000 389 948 9
3899489

[212] **Resistance Rotor [Ohm] 5000**
- Rotore resistenza [Ohm] 5000
- Résitance roteur [ohm] 5000
- Widerstand-Rotor [Ohm] 5000
- Resistencia rotor [ohm] 5000

ABARTH		
RITMO 125 TC 2.0	138AR1.000	11/81 ⇨ 12/87
ALFA ROMEO		
75 1.8	AR06202	09/85 ⇨ 06/89
90 1.8	AR06202	10/84 ⇨ 07/87
90 2.0 i.e.	AR06210	10/84 ⇨ 07/87

ALFA ROMEO		
ALFETTA 1.6	AR01600	01/75 ⇨ 12/84
ALFETTA 1.8	AR01608	10/79 ⇨ 12/84
GIULIETTA I 1.6	AR01600	10/77 ⇨ 04/85
GIULIETTA I 1.8	AR01678	04/79 ⇨ 04/85
GIULIETTA I 2.0	AR01655	06/80 ⇨ 04/85
FIAT		
124 1200	124A.000	07/66 ⇨ 10/73
124 1400 Special	124B2.000	12/68 ⇨ 12/72
124 1600 Special T	132AC.000	01/73 ⇨ 07/75
124 Spider, Sport [USA]	--	01/79 ⇨ 12/86
131 2.0 Brava [USA]	--	01/79 ⇨ 12/84
132 2.0	132C2.000	01/76 ⇨ 06/81
ARGENTA 2000	132D1.000	06/78 ⇨ 12/85
ARGENTA 2000 i.e.	132C3.000	06/81 ⇨ 07/86
RITMO II 105 1.6	138AR.000	01/83 ⇨ 12/87
LANCIA		
A 112 1.0 Abarth	A112A2.000	03/78 ⇨ 02/84
BETA 1600	828B.000	08/73 ⇨ 07/82
MASERATI		
BITURBO i	AM452	07/85 ⇨ 04/87
SEAT		
RONDA 1.2	021A1000	08/83 ⇨ 05/85

FACET 3.8255RS — 1

ROTORS

Adatt./Suitable: ***MARELLI***

ALFA ROMEO
9938173
9950047

FIAT
9938173

LANCIA
9938173

MAGNETI MARELLI
712 753 01

[212] **Resistance Rotor [Ohm] 1000**
- Rotore resistenza [Ohm] 1000
- Résitance roteur [ohm] 1000
- Widerstand-Rotor [Ohm] 1000
- Resistencia rotor [ohm] 1000

ALFA ROMEO		
164 2.0 Turbo	AR06476	10/87 ⇨ 09/98
FIAT		
CROMA I 1600	154A.048	12/85 ⇨ 12/90
CROMA I 2000 CHT	154A1.000, 154C5.000	12/85 ⇨ 09/92
CROMA I 2000 i.e. Turbo	154A2.000	12/85 ⇨ 06/90
FIORINO I 1.5	149C1.000	01/88 ⇨ 08/93
FIORINO II 1.5 iE	149C1.000	01/88 ⇨ 10/92
FIORINO II 75 i.e. 1.5	149C1.000	05/88 ⇨ 12/93
REGATA 1.6	--	09/86 ⇨ 06/89
REGATA 100 Super 1.6	149A2.000	10/83 ⇨ 12/90
REGATA 85 1.5	149A5.000	05/85 ⇨ 12/87
RITMO I 1.5	138C2.048	10/85 ⇨ 05/87
RITMO I 1.6	149A4.000	01/83 ⇨ 12/87
RITMO II 75 1.5	138A2.000	09/85 ⇨ 12/88
TEMPRA 1.6	159A3.000, 159A3.048, 159A3.098	03/90 ⇨ 12/96
TEMPRA 1.6 i.e.	159A3.046, 159A3.048	06/90 ⇨ 08/96
TIPO I 1.4	160A1.048	07/87 ⇨ 12/89
TIPO I 1.4 i.e.	160A1.046	05/89 ⇨ 04/95
TIPO I 1.6	160A2.000	01/88 ⇨ 10/92
TIPO I 1.6 SX DGT	159A3.000	05/89 ⇨ 10/95
UNO 1.3 Turbo i.e.	146A2.000	04/85 ⇨ 08/89
UNO 1.4 Super	146C2.028	09/89 ⇨ 09/92
UNO 1.4 Turbo i.e.	146A8.000, 146A8.046	09/89 ⇨ 12/96
UNO 70 1.3i SX	--	01/83 ⇨ 12/89
UNO 70 i.e. 1.4	146C1.000, 160A1.046	09/89 ⇨ 07/96
UNO 70 S 1.4	160A1.048	10/88 ⇨ 06/06
UNO 75 i.e. 1.5	138C2.048, 149C1.000	10/85 ⇨ 12/93
FIAT (BR)		
UNO 1.4i Turbo	1.4Mpi	01/94 ⇨ 12/96
LANCIA		
DEDRA 1.6 i.e.	835A1.000, 835A1.046	08/89 ⇨ 06/94
DELTA I 1.5	831A1.000, 831B1.000	09/79 ⇨ 12/92
PRISMA 1.5	831B1.000	05/86 ⇨ 07/89
PRISMA 1.6	831B6.000	08/86 ⇨ 02/92
THEMA 2000 i.e	834B1.000	09/88 ⇨ 05/92
THEMA 2000 i.e.	834B.146	09/87 ⇨ 05/92
THEMA 2000 i.e.Turbo	834C.146	07/86 ⇨ 05/90
THEMA 2000 Turbo	834C.146	12/88 ⇨ 03/92

LANCIA		
Y10 1.3 i.e.	146A5.046, 156B.000	11/87 ⇨ 12/95

FACET 3.8257RS — 1

ROTORS

Adatt./Suitable: ***MARELLI***

FIAT
9940428

FORD
1 641 611
V83H-F12200-AA

LANCIA
9940428

MAGNETI MARELLI
712 372 02
713 774 02

Motorcraft
EDR 161
EDR 210

SEAT
030 905 225 C

SKODA
030 905 225 C

VW
030 905 225 C

[212] **Resistance Rotor [Ohm] 1000**
- Rotore resistenza [Ohm] 1000
- Résitance roteur [ohm] 1000
- Widerstand-Rotor [Ohm] 1000
- Resistencia rotor [ohm] 1000

FIAT		
CROMA I 2000 i.e.	154C3.000, 834B.000, 834B.048	03/86 ⇨ 09/92
REGATA 90 i.e. 1.6	149C2.000	01/87 ⇨ 07/89
FORD		
ESCORT V RS Cosworth 4x4	N5F	10/91 ⇨ 01/95
LANCIA		
DELTA I 1.6 GT i.e.	149C2.000, 831B7.000	08/86 ⇨ 08/92
DELTA I 1.6 HF Turbo	831B3.000, 831B7.046	08/86 ⇨ 03/89
DELTA I 2.0 16V HF Integrale	831D5.000	03/89 ⇨ 09/91
DELTA I 2.0 HF Integrale	831B5.000, 831C5.000, 831C5.046	11/86 ⇨ 12/92
PRISMA 1.6 i.e.	831B7.000	05/86 ⇨ 12/89
PRISMA 2.0 i.e. Trazione integrale	831B4.000	04/86 ⇨ 12/89
SEAT		
AROSA 1.0	AER, ALL	05/97 ⇨ 06/04
AROSA 1.4	AEX, AKV, APQ	05/97 ⇨ 06/04
CORDOBA I 1.0 i	AER	09/96 ⇨ 10/02
CORDOBA I 1.4	ANX	12/97 ⇨ 04/99
CORDOBA I 1.4 i	AKV, APQ	06/94 ⇨ 12/02
CORDOBA I 1.4 i 16V	AFH	09/96 ⇨ 10/02
CORDOBA I 1.6 i	AEE, ALM	02/93 ⇨ 12/02
IBIZA II 1.0 i	AER	09/96 ⇨ 02/02
IBIZA II 1.4	ANX	12/97 ⇨ 04/99
IBIZA II 1.4 i	ABD, AEX, AKV, APQ	09/93 ⇨ 02/02
IBIZA II 1.4 i 16V	AFH	06/97 ⇨ 02/02
IBIZA II 1.6 i	AEE, ALM	03/93 ⇨ 02/02
INCA 1.4 i	AEX, AKV, APQ	11/95 ⇨ 06/03
INCA 1.6 i	1F, AEE	11/95 ⇨ 05/98
SKODA		
FELICIA 1.6	6A16XHT	06/97 ⇨ 04/02
FELICIA 1.6 GLX	6A16XHT	08/95 ⇨ 03/98
FELICIA 1.6 LX	6A16XHT	08/95 ⇨ 03/98
OCTAVIA I 1.6	6A16XHT	09/96 ⇨ 09/04
VW		
CADDY II 1.4	AEX, AKV, APQ	11/95 ⇨ 06/03
CADDY II 1.6	AEE	06/96 ⇨ 12/00
CADDY II 60 1.4	AEX, APQ	11/95 ⇨ 01/04
CADDY II 75 1.6	AEE	11/95 ⇨ 09/00
GOLF III 1.4	AEX	10/91 ⇨ 04/99
GOLF III 1.6	AEE	09/92 ⇨ 08/97
LUPO 1.0	AER, ALL	09/98 ⇨ 07/05
POLO III 1.4	AEX, AKV, ANX, APQ	05/97 ⇨ 09/01
POLO III 1.6	AEA, AEE, ALM	09/94 ⇨ 09/01
POLO III 100 1.4 16V	AFH	04/96 ⇨ 10/99
POLO III 50 1.0	AER, ALL	09/96 ⇨ 10/99
POLO III 54 1.4	ANX	01/98 ⇨ 08/99
POLO III 55 1.3	ADX	10/94 ⇨ 04/97
POLO III 55 1.4	AEX	08/95 ⇨ 10/99
POLO III 60 1.4	AEX, AKV, APQ	07/95 ⇨ 09/01
POLO III 75 1.6	AEA, AEE, AHS, ALM	10/94 ⇨ 09/01
POLO III 75 1.6 4motion	AEA	08/95 ⇨ 10/99
POLO IV 1.0	AER	08/96 ⇨ 12/01

FACET 3.8258

3

ROTORS

Adatt./Suitable: ***MARELLI***

JAGUAR
JLM 1911

MAGNETI MARELLI
713 524 01

00 **Eliminated on 25-07-2019. Please verify the availability through our local distributors**

- Eliminato il 25-07-2019. Verificare la disponibilità presso i nostri distributori
- Eliminé le 25-07-2019. Verifier la disponibilité auprès de nos distributeurs sur place
- Am 25-07-2019 gestrichen. Evtl. Verfügbarkeit bitte bei unseren Händlern prüfen
- Eliminado en fecha 25-07-2019. Verificar la disponibilidad a través de nuestros distribuidores locales

JAGUAR		
XJ 5.3	8S(92-93)	05/91 ⇨ 08/93
XJ 6.0	8D	05/93 ⇨ 03/96
XJ V12 6.0	8C(92-94)	03/93 ⇨ 11/94
XJSC 5.3	8S(92-93)	05/91 ⇨ 08/93
XJSC 6.0	8D	05/93 ⇨ 03/96

FACET 3.8259

1

ROTORS

Adatt./Suitable: ***MARELLI***

ALFA ROMEO
9950142

FIAT
9943506

INNOCENTI
9943506

LANCIA
9943506

MAGNETI MARELLI
071351702010
71351702

RENAULT
77 01 034 947

ALFA ROMEO		
164 2.0 Turbo	AR06476	10/87 ⇨ 09/98
FIAT		
CROMA I 2000 CHT	154A1.000, 154C5.000	12/85 ⇨ 09/92
CROMA I 2000 i.e.	154C3.000, 154C3.046, 834B.146	10/87 ⇨ 12/96
CROMA I 2000 i.e. Turbo	154A2.000, 154C4.000, 154C4.046, 834C.146	12/85 ⇨ 08/96
ELBA 1.5	149C1.000	01/92 ⇨ 12/96
FIORINO I 1.5	149C1.000	01/88 ⇨ 08/93
FIORINO II 1.5 iE	149C1.000	01/88 ⇨ 10/92
FIORINO II 1.6	146C6.000	01/94 ⇨ 05/01
FIORINO II 70 i.e. 1.4	146C5.000	05/94 ⇨ 05/01
FIORINO II 75 i.e. 1.5	149C1.000	05/88 ⇨ 12/93
FIORINO II 75 i.e. 1.6	146C6.000	10/93 ⇨ 05/01
TEMPRA 1.4 i.e.	159A2.000, 160A1.046	04/90 ⇨ 08/96
TEMPRA 1.6	159A3.000, 159A3.048, 159A3.098	03/90 ⇨ 12/96
TEMPRA 1.6 i.e.	159A3.046, 159A3.048	06/90 ⇨ 08/96
TIPO I 1.4	160A1.048	07/87 ⇨ 12/89
TIPO I 1.4 i.e.	160A1.046	05/89 ⇨ 04/95
TIPO I 1.6	159A3.048, 835C1.000	03/93 ⇨ 10/95
TIPO I 1.6 i.e.	159A3.046, 159A3.048, 835C1.000	07/90 ⇨ 04/95
TIPO I 1.6 i.e. [BRA]	160E2.011	03/93 ⇨ 04/95
TIPO I 1.6 SX DGT	159A3.000	05/89 ⇨ 10/95
FIAT		
UNO 1.3 Turbo i.e.	146A2.246	09/89 ⇨ 03/91
UNO 1.4 Super	146C2.028	09/89 ⇨ 09/92
UNO 45 1.0 Fire	--	01/83 ⇨ 12/89
UNO 70 i.e. 1.4	146C1.000, 160A1.046	09/89 ⇨ 07/96
UNO 70 S 1.4	160A1.048	10/88 ⇨ 06/06
UNO 75 i.e. 1.5	149C1.000	10/85 ⇨ 12/93
UNO Mondo 1.4 Super	146C2.028	01/96 ⇨
FIAT (BR)		
UNO 1.4i Turbo	1.4Mpi	01/94 ⇨ 12/96
INNOCENTI		
ELBA 1.5 i.e.	149C1.000	08/92 ⇨ 09/94
ELBA 1.6 i.e.	146C6.000	09/94 ⇨ 12/96
MILLE 1.4	160A1046	07/95 ⇨ 05/97
LANCIA		
DEDRA 1.6	835A1000	07/94 ⇨ 02/97
DEDRA 1.6 i.e.	835A1.000, 835A1.046	08/89 ⇨ 06/94
DELTA II 1.4 i.e.	160A1.046	10/94 ⇨ 08/99
THEMA 2000 i.e	834B1.000	09/88 ⇨ 05/92
THEMA 2000 i.e.	834B.146	09/87 ⇨ 05/92
THEMA 2000 i.e.Turbo	834C.146	07/86 ⇨ 05/90
THEMA 2000 Turbo	834C.146	12/88 ⇨ 03/92
RENAULT		
19 I 1.2i	E7F	01/89 ⇨ 12/92
19 I 1.4	E6J700, E6J701, E7J700	01/88 ⇨ 12/92
19 II 1.2	E7F730	05/92 ⇨ 09/94
19 II 1.4	E6J706, E7J706, E7J707, E7J742, E7J745	01/92 ⇨ 12/95
CLIO I 1.2	E5F710, E5F716, E7F700, E7F706, E7F708, E7F750	05/90 ⇨ 09/98
CLIO I 1.4	E6J712, E6J713, E6J718, E7J601, E7J710, E7J711, E7J716, E7J718, E7J719, E7J754, E7J756, E7J757	01/90 ⇨ 09/98
EXPRESS 1.4	E6J/E7J	01/85 ⇨ 10/90
MEGANE I 1.4	E7J764	09/96 ⇨ 08/03
MEGANE I 1.4 e	E7J764	01/96 ⇨ 08/03
MEGANE I 1.4 Eco	E7J624	01/96 ⇨ 03/99
MEGANE SCÉNIC I 1.4 i	E7J764	01/97 ⇨ 09/99
RAPID 1.4	E6J738, E7J720, E7J724, E7J726, E7J728, E7J770, E7J771, E7J773	09/91 ⇨ 03/98
RAPID 1.4 RN	E6J734	09/91 ⇨ 08/93

FACET 3.8260

1

ROTORS

Adatt./Suitable: ***MARELLI***

FIAT
9939790
9944407
9946356

INNOCENTI
9946356

LANCIA
9944407

MAGNETI MARELLI
071371301010
713 053 01
713 713 01

CITROËN		
AX 10	C1A	09/86 ⇨ 06/92
AX 10 E	C3A	12/86 ⇨ 12/88
AX 11	H1A, H1B	12/86 ⇨ 04/94
AX 11 4x4	H1A	06/91 ⇨ 07/92
AX 11 Cat	HAZ(TU1CP)	09/88 ⇨ 12/89
ZX 1.1	H1A, H1B, TU1	03/91 ⇨ 08/95
FIAT		
COUPE 2.0 16V	836A3.000	11/93 ⇨ 08/96
COUPE 2.0 16V [BRA]	836A3.011	11/93 ⇨ 08/96
CROMA I 2000 i.e.	154C3.000, 834B.000, 834B.048	03/86 ⇨ 09/92
ELBA 1.3	146A5.000	04/91 ⇨ 02/95
FIORINO I 1.1 60	146A9.000	11/86 ⇨ 04/88
FIORINO I 1.3	146A5.000	12/87 ⇨ 08/93
FIORINO II 1.0 iE	156A2.246	11/92 ⇨ 04/96
FIORINO II 1.3	146A5.000	01/88 ⇨ 12/94
FIORINO II 60 1.1	146A9.000	05/88 ⇨ 12/93
FIORINO II 70 1.3	146A5.000	01/88 ⇨ 12/94
PALIO 1.1	178B9.033	07/97 ⇨ 10/03
PANDA I 1.1	156C.046	05/91 ⇨ 03/95
FIAT		
PANDA I 1000	156A2.000, 156A2.100, 156A3.000	01/85 ⇨
PANDA I 1000 4x4	156A2.100, 156A2.246, 156A3.000	01/86 ⇨ 12/94
PANDA I 1000 CLX	156A2.000	05/91 ⇨ 12/94
PANDA I 1000 Fire	156A2.000	05/86 ⇨ 04/91
PANDA I 1000 Fire [CHE]	156A2.146	11/87 ⇨ 04/91
PANDA I 1000 Fire [DEU]	156A2.048	01/86 ⇨ 07/89
PANDA I 1000 i.e	156A2.246	08/92 ⇨ 02/04
PANDA I 1000 i.e. Cat	156A2.246	10/87 ⇨ 08/98
PANDA I 1100 i.e.	156C.046	01/86 ⇨ 04/91
PANDA I 1100 Trekking 4x4	156C.046	10/91 ⇨ 07/04
PANDA I 750	156A4.000	01/86 ⇨ 10/03
PANDA I 750 Cat	156A4.048	01/95 ⇨ 10/03
PANDA I 750 Fire	156A4.048	11/88 ⇨ 04/91
TEMPRA 1.4 i.e.	159A2.000, 160A1.046	04/90 ⇨ 08/96
TEMPRA 1.6	159A3.000, 159A3.048, 159A3.098	03/90 ⇨ 12/96
TEMPRA 1.6 i.e.	159A3.046, 159A3.048	06/90 ⇨ 08/96
TEMPRA 1.8 4x4	159A4.000	07/92 ⇨ 06/93
TEMPRA 1.8 i.e.	159A4.000, 159A4.046	03/90 ⇨ 08/96
TEMPRA 2.0	159A6.046	04/90 ⇨ 06/93
TEMPRA 2.0 i.e.	159A6.046	10/90 ⇨ 09/96
TEMPRA 2.0 i.e. [BRA]	159A6.011	04/93 ⇨ 12/96
TEMPRA 2.0 i.e. 4x4	159A6.046	03/92 ⇨ 03/95
TIPO I 1.1	160A3.000	01/88 ⇨ 10/91
TIPO I 1.4 i.e.	159A2.000	05/89 ⇨ 04/95
TIPO I 1.8 i.e.	159A4.000, 159A4.046	10/90 ⇨ 06/93
TIPO I 1.8 i.e.16V Sport	160A5.000	11/89 ⇨ 06/92
TIPO I 2.0	159A5.046, 159A6.046, 836A3.011	10/90 ⇨ 04/95
TIPO I 2.0 16V	160A8.046	07/91 ⇨ 04/95
TIPO I 2.0 i.e.	159A5.046, 159A6.046	03/90 ⇨ 04/95
TIPO I 2.0 i.e. [BRA]	159A6.011	03/93 ⇨ 10/95
TIPO I 2.0 i.e. 16V Sport	836A3.000	03/93 ⇨ 04/95
UNO 1.0	146A2.166	11/94 ⇨ 08/00
UNO 45 1.0	156A2.000, 156A2.100	06/86 ⇨ 12/93
UNO 45 i.e. 1.0	156A2.246	10/84 ⇨ 10/95
UNO 50 1.1	156C.046	01/90 ⇨ 12/93
UNO 50 i.e. 1.1	146C3.000	06/92 ⇨ 12/93
UNO 60 1.1	146A4.048	02/88 ⇨ 12/92
UNO 60 1.1 SX	--	01/85 ⇨ 12/89
UNO Mondo 1.0	146A2.166	01/98 ⇨
UNO Mondo 1.0 [IND]	146A2.166	01/98 ⇨
FIAT (BR)		
COUPÈ 2.0i 16V	2.0Mpi	01/95 ⇨ 12/97
TIPO 2.0i 16V	2.0Mpi	01/94 ⇨ 12/95
TIPO 2.0i 8v	2.0Mpi	01/94 ⇨ 12/95
INNOCENTI		
ELBA 1.3	146A5.000	08/91 ⇨ 12/96
ELBA 1.4 i.e.	146C5.000	09/94 ⇨ 12/96
LANCIA		
DEDRA 1.8 i.e.	835A2.000, 835A2.046, 835C5.000	09/89 ⇨ 07/99
DEDRA 2.0 16V	836A3.000	07/94 ⇨ 07/99
DEDRA 2.0 HF Integrale	835A7.046	11/90 ⇨ 07/94
DEDRA 2.0 i.e.	835A5.000, 835A5.046	09/89 ⇨ 07/99
DEDRA 2.0 i.e. Turbo	835A8.046	04/91 ⇨ 07/99
DEDRA 2.0 i.e. Turbo Integrale	835A7.000	04/90 ⇨ 08/91
DEDRA 2.0 Integrale	836A3.000	07/94 ⇨ 07/99
DEDRA 2.0 Turbo	835A8.000	11/90 ⇨ 06/94
DELTA I 1.3	1831B.000, 3831B.000, 831A2.000, 831B.000	09/79 ⇨ 10/92
DELTA I 1.6 GT i.e.	149C2.000, 831B7.000	08/86 ⇨ 08/92
DELTA I 1.6 HF Turbo	831B3.000, 831B7.046	08/86 ⇨ 03/89
DELTA I 2.0 16V HF Evo Integrale	831E5.000	06/93 ⇨ 01/94
DELTA I 2.0 HF Integrale	831C5.046	12/86 ⇨ 12/92
DELTA II 2.0 16V	836A3.000	06/93 ⇨ 08/99
PRISMA 1.3	831A2.000	01/83 ⇨ 12/89
Y10 1.0 Fire	156A2.100	06/85 ⇨ 06/91
Y10 1.0 Fire Catalytic-Conv	156A2.246	10/87 ⇨ 02/92
Y10 1.0 Fire Trazione integrale	156A2.000, 156A2.100, 156A2.246	12/86 ⇨ 02/92
Y10 1.1 i.e Fire	156C.000	08/89 ⇨ 06/92
Y10 1.1 i.e Fire Trazione integrale	156C.000	08/89 ⇨ 06/92
Y10 1.1 i.e. Fire	156C.046	07/89 ⇨ 09/95
PEUGEOT		
106 I 1.0	TU9	09/91 ⇨ 03/01
106 I 1.1	H1B(TU1)	08/91 ⇨ 03/96
205 II 1.0	TU9	10/87 ⇨ 09/98
309 II 1.1	H1B(TU1)	09/89 ⇨ 10/93

FACET 3.8323

1

ROTORS

Adatt./Suitable: ***MITSUBISHI***

BOSCH
1 987 234 009
1 987 234 024
1 987 234 909

GENERAL MOTORS
7 992 636
7 992 994

HYUNDAI
27115-21020
27131-11000
27132-11000

MAZDA
0324-24-312
AM01-24-312
F855-24-312

MITSUBISHI
MD602758
MD611850
T12271
T880T12271

Motorcraft
EDR 80

NISSAN
22157-10B10
22157-R9006
22157-R9007

[03] **Supplied until depletion**
- Fornibile fino ad esaurimento delle scorte
- Fourni jusqu'à épuisement du stock
- Lieferbar solange vorrat reicht
- Suministrado hasta el stock termina

[202] **without resistance**
- senza resistenza
- sans résistance
- ohne Widerstand
- sin resistencia

FORD AUSTRALIA		
COURIER 1.8	--	01/79 ⇨ 12/84
COURIER 2.0	--	01/79 ⇨
LASER 1.3	E3	03/81 ⇨ 02/83
LASER 1.5	E5	03/81 ⇨ 02/83
LASER 1.5 Sport	E5	03/81 ⇨ 02/83
METEOR 1.3	--	04/82 ⇨ 09/85
HYUNDAI		
ELANTRA I 1.5	--	10/90 ⇨ 04/95
EXCEL 1.3	G4AN	07/85 ⇨ 07/91
EXCEL 1.5	G4AJ	07/85 ⇨ 08/89
LANTRA I 1.5	G4DJ	10/90 ⇨ 04/95
PONY 1.3	G13B	10/85 ⇨ 01/95
PONY 1.5	G15B, G4DJ	10/85 ⇨ 01/95
PONY / EXCEL 1.3	G4DG	01/90 ⇨ 01/95
PONY / EXCEL 1.5	G15B, G4DJ	01/90 ⇨ 01/95
S COUPE 1.5	G4DJA	03/90 ⇨ 12/92
STELLAR 1.4	4G33	10/83 ⇨ 08/86
STELLAR 1.6	G32B	10/83 ⇨ 12/91
STELLAR 2.0	--	01/87 ⇨ 12/91
MAZDA		
929 I 2.0	MA	05/79 ⇨ 07/86
929 II 2.0	FE(8V)	03/84 ⇨ 07/87
MITSUBISHI		
COLT I 1.2 GL	4G11	12/78 ⇨ 01/84
COLT III 1.3 GL	4G13(8V)	04/88 ⇨ 12/90
COLT II 1.3 EL,GL	G13B	06/86 ⇨ 04/88
CORDIA 1.8 [USA]	G62B	01/82 ⇨ 12/88
CORDIA 1.8 Turbo [USA]	G62B	01/82 ⇨ 12/88
LANCER V 1.2 GL	4G16	05/88 ⇨ 08/92
LANCER V 1.3	4G13(8V), G13B	04/88 ⇨ 05/92
LANCER V 1.3 GL	G13B	05/88 ⇨ 06/90
LANCER V 1.5	4G15(12V), 4G15(8V)	04/88 ⇨ 05/92
LANCER V 1.8 4WD	4G37	03/89 ⇨ 12/90
LANCER III/IV 1.2	4G16	08/86 ⇨ 04/88
GALANT VI 1.6	4G32	01/88 ⇨ 10/92
GALANT VI 1.8	4G37	11/87 ⇨ 10/92
L200 II 1.6	4G32	04/87 ⇨ 10/96
L200 II 2.6 4WD	G54B	11/89 ⇨ 05/95
MONTERO 2.6i [USA]	4G54	01/83 ⇨ 12/90
PAJERO I 2.6	4G54	01/83 ⇨ 11/90
PAJERO I 2.6 4WD	4G54	01/83 ⇨ 05/91
PAJERO II 2.6 4WD	4G54	03/91 ⇨ 10/97
SHOGUN I 2.6 4x4	4G54	01/84 ⇨ 02/91
STARION 2.0 Turbo ECi	4G63-T(ECI), 4G63-T/C	06/82 ⇨ 08/87
TRUCK 2.6 [USA]	G54B	01/86 ⇨
NISSAN		
URVAN III 2.0	Z20	05/87 ⇨ 05/97
VANETTE II 1.5	A15	04/87 ⇨ 11/94

FACET 3.8330

1

ROTORS

Adatt./Suitable: ***MITSUBISHI***

BOSCH
1 987 234 051

MITSUBISHI
T13371
T880T13371

NISSAN
22157-23G15
22157-M5610

[03] **Supplied until depletion**
- Fornibile fino ad esaurimento delle scorte
- Fourni jusqu'à épuisement du stock
- Lieferbar solange vorrat reicht
- Suministrado hasta el stock termina

NISSAN		
NAVARA I 2.4	Z24i	06/92 ⇨ 02/97
SUNNY II 1.4 LX	GA14S	10/88 ⇨ 08/91
VANETTE II 2.0	Z20S	07/87 ⇨ 08/94

FACET 3.8331/7

3

ROTORS

Adatt./Suitable: ***MITSUBISHI***

BOSCH
1 987 234 058

HYUNDAI
27115-32500
27131-32810

MITSUBISHI
27131-32810
MD611151
T16571

[03] **Supplied until depletion**
- Fornibile fino ad esaurimento delle scorte
- Fourni jusqu'à épuisement du stock
- Lieferbar solange vorrat reicht
- Suministrado hasta el stock termina

HYUNDAI		
ELANTRA I 1.5 i GL	G4DJ	12/90 ⇨ 08/94
H-1 I 2.4	G4CS	06/97 ⇨ 04/04
H-1 I 2.4 4WD	G4CS	02/98 ⇨ 04/04
H100 2.4	G4CS	07/93 ⇨ 12/04
LANTRA I 1.5 i.e.	G4DJ	10/90 ⇨ 11/95
PONY 1.5 i	G15B, G4DJ	10/89 ⇨ 01/95
PONY / EXCEL 1.5 i	G15B, G4DJ	01/90 ⇨ 01/95
PORTER I 2.4	G4CS	03/96 ⇨ 04/04
PRECIS 1.5 i [USA]	G4DJ	01/89 ⇨
SANTAMO 2.0 16V	G4JP	05/99 ⇨ 12/02
SANTAMO 2.0 16V 4x4	G4CP-D	05/99 ⇨ 12/02
S COUPE 1.5 i	G4DJ	02/90 ⇨ 05/96
SONATA II 2.4 i	G4CS	09/88 ⇨ 08/91
SONATA III 1.8 GLS	G4DM	07/96 ⇨ 05/98
SONATA III 1.8 i	G4CM	05/93 ⇨ 06/98
SONATA III 2.0 i	G4CP, G4EP	06/94 ⇨ 06/98
MITSUBISHI		
COLT III 1.5 GLXi	4G15(8V)	04/88 ⇨ 05/92
LANCER V 1.5	4G15(12V)	09/88 ⇨ 08/90
LANCER V 1.5 12V	4G15(12V)	05/89 ⇨ 05/92
LANCER V 1.5 GLS	4G15(12V)	08/89 ⇨ 08/92
LANCER V 1.8 4WD	4G37	09/89 ⇨ 06/92
GALANT IV 1.6 GLX	4G32	09/80 ⇨ 05/84
GALANT VI 2.0	4G63(SOHC8V)	11/87 ⇨ 12/92
GALANT VI 2.0 4WD	4G63(SOHC8V)	12/88 ⇨ 10/92
L200 II 2.4	4G64(12V)	06/90 ⇨ 10/96
L200 II 2.4 4WD	4G64(12V)	06/94 ⇨ 10/96
MONTERO 2.4 16V	4G64(12V)	04/91 ⇨
PAJERO II 2.4	4G64(12V)	04/91 ⇨ 04/00
PAJERO III 2.4	4G64(12V)	10/01 ⇨ 08/06
PAJERO III 2.4 4x4	4G64(12V)	10/01 ⇨ 12/06
PAJERO SPORT II 2.4	4G64(16V)	07/08 ⇨
PRECIS 1.5 i [USA]	G4DJ	01/89 ⇨ 12/94
TRUCK 2.4i [USA]	4G64	01/89 ⇨
MITSUBISHI		
VALLEY 2.4 i	4G64	09/92 ⇨ 10/94

FACET 3.8331/8

3

ROTORS

Adatt./Suitable: ***MITSUBISHI***

BOSCH
1 987 234 056
F 005 X04 731

FORD
4 046 843
E8BZ-12200-A
FOJY-12200-A
KK 150 18 V05
XM34-12200-BA

GENERAL MOTORS
96 056 629

HOLDEN
3331086240

KIA
KK150-18V05
KK150-18-V05A

MAZDA
B303-18-V05
F829-18-V05
FE2S-18-V05
G601-18-V05

MITSUBISHI
T16871

Motorcraft
DRE 383
DRE 388

SUZUKI
33310-82032
33310-82032-000
33310-86240
33310-86240-000

FORD		
RANGER IV 2.2	--	10/99 ⇨
FORD AUSTRALIA		
FESTIVA 1.3	--	01/91 ⇨
SPECTRON 2.0	OHC	01/84 ⇨
HOLDEN		
BARINA 1.3 GL	410UF015G02	02/89 ⇨ 05/94
KIA		
PRIDE 1.1 i	B1	01/91 ⇨ 10/00
PRIDE 1.3 [GBR]	--	01/90 ⇨
PRIDE 1.3 i	--	01/90 ⇨ 05/97
MAZDA		
121 I 1.1	B1, B115, B116	10/87 ⇨ 01/91
121 I 1.3	B3	10/87 ⇨ 06/91
323 III 1.5	B505, B535, B536	09/89 ⇨ 09/93
323 IV 1.3	E3	09/81 ⇨ 10/85
323 V 1.3	B333, E3, E391, E393	08/85 ⇨ 05/89
323 V 1.3 i	B335	09/85 ⇨ 08/89
323 V 1.5	B5, B50, B53, E5	08/85 ⇨ 10/89
323 V 1.6	93AF1006, B6E	09/86 ⇨ 10/95
323 V 1.6 4x4	B65M, B6E	05/90 ⇨ 03/93
323 V 1.6 GT	93AF1006	01/86 ⇨ 10/89
323 V 1.6i 16v Formula 4	B6F2	08/87 ⇨ 05/89
626 IV 1.8	F8(12V)	09/87 ⇨ 05/92
626 IV 2.0	FE(12V)	09/87 ⇨ 10/90
626 IV 2.0 12V	FE(12V), FEFJ, FEFK	09/87 ⇨ 05/92
626 IV 2.2 12V	F2	11/87 ⇨ 04/92
626 IV 2.2 12V 4WD	F2	11/87 ⇨ 07/90
929 III 2.0	FE(8V), FEFA	06/87 ⇨ 05/89
929 III 2.2	--	01/86 ⇨ 12/91
929 III 2.2 12V	F2, F21, F267, F2E	02/87 ⇨ 05/89
929 III 2.2 i	F2-EGI	05/87 ⇨ 12/88
929 III 2.2i 12v	F2E6, F2E7	06/89 ⇨ 09/92
E2000 2.0	FEBN, FECK, FEY7	11/87 ⇨ 05/95
E2000 2.0 4x4	FECK, FEY7	11/87 ⇨ 07/91
E E2000 4WD	FEBN	10/88 ⇨ 09/89
MPV I [USA] 2.6 12V	--	01/89 ⇨ 12/94
MPV I [USA] 2.6 12V AWD	--	01/89 ⇨ 12/94
SUZUKI		
SWIFT I / II / III 1.3 GTi SOHC	G13B	10/89 ⇨ 12/95
SWIFT I / II / III 1.6	G16B	11/89 ⇨ 12/91
SWIFT I / II / III 1.6 4WD	G16B	11/89 ⇨ 12/91

FACET 3.8331/9

3

ROTORS

Adatt./Suitable: ***MITSUBISHI***

BOSCH
F 005 X04 737

CHRYSLER
MD611 459
MD611 757

HYUNDAI
27115-35000
27131-35010

MITSUBISHI
MD611459
MD611757
T15672
T15673

NISSAN
22157-03P10

CHRYSLER		
LE BARON 3.0 i V6	6G72	01/90 ⇨ 12/96
VOYAGER I 3.0 i [USA]	EFA	10/84 ⇨ 07/90
VOYAGER 3.0 i	300, 6G72	01/91 ⇨ 09/95
VOYAGER 3.3	EGA	10/89 ⇨ 09/90
HYUNDAI		
GALLOPER 3.0 V6	G6AT	08/98 ⇨ 12/03
INNOVATION 3.0 V6	G6AT	05/00 ⇨
SONATA II 3.0 i V6 [USA]	G6AT	01/88 ⇨
SONATA III 3.0 i V6	G6AT	05/93 ⇨ 06/98
MITSUBISHI		
PAJERO I 3.0 i 4WD	6G72(SOHC12V)	05/88 ⇨ 05/91
PAJERO I 3.0 V6	6G72(SOHC12V)	11/88 ⇨ 11/90
PAJERO II 3.0 V6	6G72(SOHC12V)	12/90 ⇨ 12/95
PAJERO II 3.0 V6 4WD	6G72(SOHC12V)	12/90 ⇨ 12/95

FACET 3.8331/10

3

ROTORS

Adatt./Suitable: ***MITSUBISHI***

BOSCH
1 987 234 038

MITSUBISHI
T17371

NISSAN
22157-17B10
22157-27M15

NISSAN		
NX1600 1.6 [USA]	E16	01/87 ⇨ 12/90
PICK UP I 2.4 i [USA]	KA24E	01/89 ⇨
PICK UP I 2.4 i 12V	KA24E	04/92 ⇨ 02/98
PICK UP I 2.4 i 12V 4WD	KA24E	04/92 ⇨ 02/98
PULSAR NX 1.6 [USA]	E16	01/86 ⇨
SUNNY II 1.6 i	E16i	06/86 ⇨ 10/90
SUNNY II 1.6 i 12V	GA16i	06/86 ⇨ 06/91
SUNNY II 1.6 i 4x4	E16i	06/86 ⇨ 10/90
SUNNY III 1.4	GA14DS	10/90 ⇨ 06/95
SUNNY III 1.4 i	GA14DS	10/90 ⇨ 05/95

FACET 3.8331/13

3

ROTORS

Adatt./Suitable: ***MITSUBISHI***

BOSCH
1 987 234 033

MAZDA
F220-18-V05

Motorcraft
DRE 385

MAZDA		
323 VI C 1.3	B3E	09/89 ⇨ 07/94
323 VI C 1.8 16V 4WD	BP	11/91 ⇨ 12/93
323 VI C 1.8 16V GT	BP(DOHC)	09/89 ⇨ 03/93
323 VI C 1.8 16V Turbo 4WD	BPTurbo	09/90 ⇨ 12/92

FACET 3.8331/18

1

ROTORS

Adatt./Suitable: ***MITSUBISHI***

BOSCH
1 987 234 060

NISSAN
22157-1E410
22157-53F11

NISSAN		
240SX 2.4	KA24DE	04/93 ⇨ 09/94
SERENA 1.6	GA16DE	02/93 ⇨ 09/01
SERENA 2.0	SR20DE	11/92 ⇨ 09/01

FACET 3.8331/19

1

ROTORS

Adatt./Suitable: ***MITSUBISHI***

BOSCH
1 987 234 060
1 987 234 062
F 005 X04 739

HOLDEN
3331070B50

MAZDA
B61V-18-V05

MITSUBISHI
MD618284
T880T21572

Motorcraft
ADR 5052

NISSAN
22157-55K10

SUBARU
22157-KA060

SUZUKI
33310-70B50
33310-70B50-000

FORD AUSTRALIA		
LASER 1.6	B6(SOHC16V)	03/90 ⇨ 09/91

HOLDEN		
BARINA 1.3 GL	410UF015G02	02/89 ⇨ 05/94
MAZDA		
121 I 1.1	B115, B116	10/87 ⇨ 01/91
121 I 1.1 Unleaded Fuel	--	01/87 ⇨ 12/91
121 I 1.3	B3	10/87 ⇨ 06/91
121 I 1.3 Leaded Fuel	--	01/87 ⇨ 12/91
121 II 1.1	B1	11/90 ⇨ 10/93
323 III 1.5	B505, B535, B536	09/89 ⇨ 09/93
323 VI C 1.6	B6E	09/89 ⇨ 06/91
323 VI F 1.6	B6E	09/89 ⇨ 06/91
323 VI S 1.3	B383, B3E	09/89 ⇨ 06/91
323 VI S 1.3 16V	B3(16V)	04/91 ⇨ 07/94
323 VI S 1.6	B6E	09/89 ⇨ 06/91
323 VI S 1.6 16V	B6	08/89 ⇨ 10/96
323 VI 1.3 16V	B384, B386, B387	06/89 ⇨ 03/91
MITSUBISHI		
COLT III 1.3 12V	4G13(12V)	04/88 ⇨ 05/92
COLT III 1.3 GL	4G13(8V)	04/88 ⇨ 12/90
COLT V 1.5	301353C	09/95 ⇨ 09/03
COLT V 1.5 16V	301353C	10/99 ⇨ 09/03
LANCER V 1.3	4G13(8V), G13B	04/88 ⇨ 05/92
LANCER V 1.3 12V	4G13(12V)	07/90 ⇨ 07/93
LANCER V 1.5	4G15(12V), 4G15(8V)	04/88 ⇨ 05/92
L400 2.0	4G63(SOHC16V)	12/94 ⇨ 10/02
LANCER VI 1.5	4G15(12V)	09/92 ⇨ 07/96
LANCER VII 1.5	301353C	06/00 ⇨ 08/03
LANCER VII 1.5 16V	301353C	10/99 ⇨ 08/03
SPACE GEAR 2.0 16V	4G63(DOHC16V)	08/96 ⇨ 05/00
SUBARU		
LEGACY I 1.6	--	01/89 ⇨
LEGACY I 1.8	--	01/89 ⇨
M80 800	--	01/90 ⇨

FACET 3.8331/31

1

ROTORS

Adatt./Suitable: ***MITSUBISHI***

BOSCH
1 987 234 060

CHEVROLET
93740921

DAEWOO
93740921
TD200C01001

FORD
E32Z-12200-B
F32Z-12200-B
F52Z-12200-B

GENERAL MOTORS
96 064 787
96 067 826

MAZDA
FS07-18-V05
FS07-18-V05A

MITSUBISHI
MD618187
MD619272

Motorcraft
DRE 390
DRE 390 A

NISSAN
22157-50Y10

SUZUKI
33310-56B10
33310-56B10-000
33310-60C30
33310-60C30-000
33310-60C31
33310-60C31-000

CHEVROLET		
SPARK I 0.8	F8CV	09/00 ⇨ 12/06
DAEWOO		
MATIZ 0.8	F8CV	08/98 ⇨
MITSUBISHI		
L200 IV 2.4 i	4G64(16V)	11/05 ⇨ 12/15
EXPO 2.4 i [USA]	4G64	01/91 ⇨ 12/92
GALANT VI 2.0	4G63(SOHC8V)	11/87 ⇨ 12/92
GALANT VI 2.0 4WD	4G63(SOHC8V)	12/88 ⇨ 10/92
L200 III 2.0	4G63(SOHC16V)	06/96 ⇨ 12/07
L200 III 2.4 4WD	4G64(16V)	06/96 ⇨ 12/07
L400 2.0	4G63(SOHC16V)	12/94 ⇨ 10/02
L400 2.4	4G64(16V)	05/95 ⇨ 02/06
L400 2.4 i 4WD	4G64(16V)	05/95 ⇨ 05/00

MITSUBISHI		
LANCER V 1.8 4WD	4G37	03/89 ⇨ 06/92
LANCER V 1.8 GTi	4G37	06/92 ⇨ 07/93
LANCER VI 1.8 GTi	4G37	06/92 ⇨ 07/93
SPACE GEAR 2.0 16V	4G63(DOHC16V)	08/96 ⇨ 05/00
SPACE GEAR 2.4 i	4G64(16V)	05/95 ⇨ 05/00
NISSAN		
SUNNY III 1.4	GA14DS	10/90 ⇨ 06/95
SUNNY III 1.4 i	GA14DS	10/90 ⇨ 05/95
SUNNY III 1.6 i	GA16DE, GA16DS	10/90 ⇨ 03/00
SUZUKI		
SIDEKICK 1.6i [USA]	--	01/91 ⇨
SIDEKICK 1.6i 16V JLX 4x4	G16B	04/89 ⇨ 04/96
VITARA I 1.6 8V	--	01/90 ⇨ 12/98

FACET 3.8331/32

1

ROTORS

Adatt./Suitable: ***MITSUBISHI***

BOSCH
1 987 234 061
F 005 X12 697

FORD
3 993 623
F4BZ-12200-A
F52Z-12200-D

KIA
MB593-18V05
MB6BF-18V05

MAZDA
B593-18-V05
B6BF-18-V05

Motorcraft
DRE 394

FORD		
PROBE 2.0 16V	A20LE-FS	01/93 ⇨ 09/97
FORD AUSTRALIA		
LASER 1.6 i	B6(DOHC16V)	10/94 ⇨ 03/99
LASER 1.8 i	BP(DOHC)	10/94 ⇨ 03/99
MAZDA		
323 VII C 1.3 16V	B3(16V)	08/94 ⇨ 09/98
323 VII C 1.5 16V	Z5-DE	08/94 ⇨ 09/98
323 VII C 1.8 16V	BP-ZE	08/94 ⇨ 09/98
323 VII 1.5 16V	Z5-DE	07/94 ⇨ 09/98
323 VII 1.8 16V	BP-ZE	08/94 ⇨ 09/98
323 VII P 1.3 16V	B3(16V)	10/96 ⇨ 09/98
323 VII P 1.5 16V	Z5-DE	10/96 ⇨ 09/98
323 VIII F 1.4	B3(16V)	01/01 ⇨ 05/04
323 VIII F 1.4 16V	B3ME	09/98 ⇨ 01/01
323 VIII S 1.3	B3(16V)	01/01 ⇨ 05/04
323 VIII S 1.3 16V	B3(16V)	08/94 ⇨ 01/01
323 VIII S 1.5 16V	Z5-DE	08/94 ⇨ 09/98
323 VIII S 1.8 16V	BP-ZE	08/94 ⇨ 09/98
626 V 1.8	FP, FP01LP	08/91 ⇨ 04/97
626 V 1.8 i	--, FP	08/91 ⇨ 06/97
626 V 2.0 i	FS	08/91 ⇨ 04/97
626 V 2.0 i 4WD	FS	04/92 ⇨ 04/97
DEMIO 1.3 16V	B3ME	08/98 ⇨ 07/03
DEMIO 1.5 16V	B5E	04/00 ⇨ 07/03
MX-3 1.6 i	B6D	11/93 ⇨ 09/98
MX-6 2.0	FS	02/92 ⇨ 02/97

FACET 3.8331/33

3

ROTORS

Adatt./Suitable: ***MITSUBISHI***

BOSCH
F 005 X04 747
F 005 X12 881

FORD
3 395 566
3 880 181
F32Z-12200-C
KL01-18V05-A

FORD AUSTRALIA
K L01-18-V05 A

FORD USA
3 880 181

MAZDA
KL01-18-V05
KL01-18-V05A

Motorcraft
DRE 391

[03] **Supplied until depletion**
- Fornibile fino ad esaurimento delle scorte
- Fourni jusqu'à épuisement du stock
- Lieferbar solange vorrat reicht
- Suministrado hasta el stock termina

FORD AUSTRALIA		
TELSTAR 2.5	KL-ZE	01/92 ⇨ 10/95
TELSTAR 2.5 TX5 EFi	KL-ZE	10/94 ⇨ 11/96
FORD USA		
PROBE II 2.5 V6 24V	KL	10/93 ⇨ 03/98
MAZDA		
626 V 2.5 24V	KL	01/92 ⇨ 04/97
626 V 2.5i V6 [USA]	--	01/94 ⇨
MX-3 1.8 i V6	K819	01/92 ⇨ 01/94
MX-6 2.5 24V	KL	02/92 ⇨ 09/97

FACET 3.8331/34

3

ROTORS

Adatt./Suitable: ***MITSUBISHI***

BOSCH
F 005 X12 882
F 005 X12 883
F 005 X12 894

FORD
3 891 726
F52Z-12200-A
F52Z-12200-C

FORD USA
3 891 726

MAZDA
KF34-18-V05
KF34-18-V05A

MITSUBISHI
MD619274

Motorcraft
DRE 395

FORD AUSTRALIA		
TELSTAR 2.5	KL-ZE	01/92 ⇨ 10/95
TELSTAR 2.5 TX5 EFi	KL-ZE	10/94 ⇨ 11/96
FORD USA		
PROBE II 2.5 V6 24V	KL	10/93 ⇨ 03/98
MAZDA		
323 VII 2.0 24V	KF	08/94 ⇨ 09/98
626 V 2.5 24V	KL	08/94 ⇨ 04/97
MILLENIA 2.5i [USA]	--	05/99 ⇨
MPV I 3.0	JE94	09/88 ⇨ 12/91
MPV I 3.0 i V6	JE94	11/88 ⇨ 09/99
MX-3 1.8 i V6	K838, K8-ZE	01/94 ⇨ 10/97
MX-6 2.5 24V	KL	02/92 ⇨ 09/97
MX-6 2.5 i 24V	KL	08/94 ⇨ 02/97
XEDOS 9 2.0	KF	08/98 ⇨ 08/00
XEDOS 9 2.0 24V	KF	08/93 ⇨ 01/00
XEDOS 9 2.5 24V	KL	07/93 ⇨ 07/00
XEDOS 9 2.5 V6	KL	07/00 ⇨ 09/02
MITSUBISHI		
GALANT VIII 2.5 V6 24V	6A13	09/00 ⇨ 10/04

FACET 3.8331/36

1

ROTORS

Adatt./Suitable: ***MITSUBISHI***

BOSCH
F 005 X12 629
F 00E 000 243
F 00E 140 440

GENERAL MOTORS
91 172 825

INFINITI
22157-46N12

MITSUBISHI
MD619000
MD619216
MD619354
MD619434
MD619637

NISSAN
22157-0M512
22157-0M810
22157-2J210
22157-46N11
22157-46N12

SUZUKI
33310-70E00
33310-70E00-000
33310-70E01
33310-70E01-000

INFINITI		
G20 2.0	SR20DE	01/90 ⇨ 12/97
MITSUBISHI		
CARISMA 1.6	4G92(SOHC16V)	07/95 ⇨ 06/06
CARISMA 1.8	4G93(SOHC16V)	07/95 ⇨ 07/97
COLT IV 1.6 4WD	4G92(SOHC16V)	08/93 ⇨ 08/95
COLT IV 1.6 GLXi 16V	4G92(SOHC16V)	04/92 ⇨ 04/96
COLT V 1300 GL,GLX	4G13(12V)	05/96 ⇨ 06/00
LANCER VI 1.6 16V	4G92(SOHC16V)	06/92 ⇨ 10/03
LANCER VI 1.6 16V 4WD	4G92(SOHC16V)	06/92 ⇨ 10/03
LANCER VII 1.3 12V	4G13(12V)	12/95 ⇨ 08/03
SPACE RUNNER 1.8	4G93(SOHC16V)	10/91 ⇨ 08/99
SPACE RUNNER 1.8 4WD	4G93(SOHC16V)	10/91 ⇨ 08/99
SPACE STAR 1.3 16V	4G13(16V)	09/00 ⇨ 12/04
NISSAN		
240SX 2.4	KA24DE	05/94 ⇨ 08/97
ALMERA I 2.0 GTi	SR20DE	07/96 ⇨ 03/00
ALMERA TINO 2.0	SR20DE	08/00 ⇨ 01/03
PRIMERA II 2.0	SR20DEL	10/97 ⇨ 06/99
PRIMERA II 2.0 16V	SR20DE	06/96 ⇨ 07/02
PRIMERA II 2.0 GT	SR20DEH	10/97 ⇨ 06/99
PRIMERA I 2.0	SR20DE	07/94 ⇨ 01/98
SUZUKI		
SIDEKICK 1.6 JS [USA]	--	05/96 ⇨ 07/98
SIDEKICK 1.6 JX 4x4 [USA]	--	05/96 ⇨ 07/98
X-90 1.6 i 16V	G16B	09/95 ⇨ 12/97
X-90 1.6 i 16V 4x4	G16B	09/95 ⇨ 12/97

FACET 3.8331/37

1

ROTORS

Adatt./Suitable: ***MITSUBISHI***

BOSCH
1 987 234 055
FORD
3 857 542
F32Z-12200-A
F42Z-12200-A
FS01-18V05-A
MAZDA
FS01-18-V05
FS01-18-V05A
MITSUBISHI
MD618556
MD619273
Motorcraft
DRE 389
DRE 389 A

[03] **Supplied until depletion**
- Fornibile fino ad esaurimento delle scorte
- Fourni jusqu'à épuisement du stock
- Lieferbar solange vorrat reicht
- Suministrado hasta el stock termina

FORD		
PROBE 2.0 16V	A20LE-FS	01/93 ⇨ 09/97
MAZDA		
626 V 1.8	FP, FP01LP	08/91 ⇨ 04/97
626 V 1.8 i	--, FP	08/91 ⇨ 06/97
626 V 2.0 i	FS	08/91 ⇨ 04/97
626 V 2.0 i 4WD	FS	04/92 ⇨ 04/97
MITSUBISHI		
COLT IV 1.6 4WD	4G92(SOHC16V)	08/93 ⇨ 08/95
COLT IV 1.6 GLXi 16V	4G92(SOHC16V)	04/92 ⇨ 04/96
EXPOLRV 2.4i [USA]	4G64	01/92 ⇨
GALANT VII 1.8 GLSI	4G93(SOHC16V)	11/92 ⇨ 08/96
GALANT VII 2.0 GLSI	4G63(SOHC16V)	11/92 ⇨ 08/96
GALANT VII 2.0 GLSI 4WD	4G63(SOHC16V)	11/92 ⇨ 08/96
LANCER V 1.6 16V	4G92(SOHC16V)	06/92 ⇨ 05/94
LANCER V 1.6 4WD	4G92(SOHC16V)	06/92 ⇨ 11/93
LANCER VI 1.6 16V	4G92(SOHC16V)	06/92 ⇨ 10/03
LANCER VI 1.6 16V 4WD	4G92(SOHC16V)	06/92 ⇨ 10/03
SPACE RUNNER 1.8	4G93(SOHC16V)	10/91 ⇨ 08/99
SPACE RUNNER 1.8 4WD	4G93(SOHC16V)	10/91 ⇨ 08/99
SPACE WAGON 1.8	4G93(SOHC16V)	10/91 ⇨ 10/98
SPACE WAGON 1.8 4WD	4G93(SOHC16V)	10/91 ⇨ 10/98
SPACE WAGON 2.0	4G63(SOHC16V)	10/92 ⇨ 10/98
SPACE WAGON 2.0 4WD	4G63(SOHC16V)	10/92 ⇨ 10/98

FACET 3.8331/38

3

ROTORS

Adatt./Suitable: ***MITSUBISHI***

HYUNDAI
27131-02750

HYUNDAI		
ATOS 1.0 i	G4HC	02/98 ⇨ 03/02
ATOS PRIME 1.0 i	G4HC	08/99 ⇨

FACET 3.8331/39

3

ROTORS

Adatt./Suitable: ***DAC***

CHEVROLET
93740944
DAEWOO
329013
93740944
GENERAL MOTORS
93 740 944

CHEVROLET		
SPARK I 0.8	F8CV	09/00 ⇨ 12/06
DAEWOO		
MATIZ 0.8	F8CV	08/98 ⇨

FACET 3.8362RS

1

ROTORS

Adatt./Suitable: ***PAL***

SKODA
113 911 400

[212] **Resistance Rotor [Ohm] 5000**
- Rotore resistenza [Ohm] 5000
- Résitance roteur [ohm] 5000
- Widerstand-Rotor [Ohm] 5000
- Resistencia rotor [ohm] 5000

SKODA		
105,120 1.0	33*	08/76 ⇨ 12/89
105,120 1.0 105 S, L	742.10	08/76 ⇨ 12/90
105,120 1.0 105 S, L, GL	742.10	08/76 ⇨ 08/83
105,120 1.0 105 S, L, LS	742.10	10/83 ⇨ 12/90
105,120 1.2	37*, 55*	08/76 ⇨ 12/89
105,120 1.2 120 GLS	742.12X	02/83 ⇨ 12/90
105,120 1.2 120 L	742.12, 742.12X	08/76 ⇨ 12/90
105,120 1.2 120 LS	742.12X	08/76 ⇨ 12/90
130 1.3	43*	01/84 ⇨ 12/88
135 1.3	43*	01/87 ⇨ 12/89
136 1.3	46*	01/87 ⇨ 12/89
FAVORIT 1.3	781.135, OHC	08/91 ⇨ 06/97
FAVORIT 1.3 135	781.135	10/90 ⇨ 09/94
FAVORIT 1.3 135L	781.135	05/89 ⇨ 09/94
FAVORIT 1.3 136	136L	10/90 ⇨ 09/94
FELICIA 1.3	061GW4G15K, 135, 135L, 136I	10/94 ⇨ 03/98

FACET 3.8363RS

1

ROTORS

Adatt./Suitable: ***PAL***

SKODA
114 911 070
115 911 401

[212] **Resistance Rotor [Ohm] 1000**
- Rotore resistenza [Ohm] 1000
- Résitance roteur [ohm] 1000
- Widerstand-Rotor [Ohm] 1000
- Resistencia rotor [ohm] 1000

SKODA		
FAVORIT 1.3	135B, 136B, 781.135, 781.135E, OHC	08/91 ⇨ 06/97
FAVORIT 1.3 135	781.135	10/90 ⇨ 09/94
FAVORIT 1.3 135 X, LX, GLX	781.135E	01/90 ⇨ 09/94
FAVORIT 1.3 135L	781.135	05/89 ⇨ 09/94
FAVORIT 1.3 136	136L	10/90 ⇨ 09/94

FACET 3.8714RS

3,5

ROTORS

Adatt./Suitable: ***U.D.S.S.R.***

LADA
21010-3706020-10
21013-7060010-10 [*C]
2101-3706020
2101-3706020-10
2107-3706020-10
2107-3706020-20
3037-06020
38-37060-20

[*C] **Available rotor only-not, the distributor assy**
- Fornito solo distributore rotante, non lo spinterogeno completo
- Disponible seulement le rotor, non pas l'allumeur complet
- Erhältlich nur rotor, nicht der komplette verteiler
- Disponible solo el rotor, no el distribuidor completo

[212] **Resistance Rotor [Ohm] 5000**
- Rotore resistenza [Ohm] 5000
- Résitance roteur [ohm] 5000
- Widerstand-Rotor [Ohm] 5000
- Resistencia rotor [ohm] 5000

LADA		
LADA 1.2	--	01/80 ⇨
LADA 1.3	--	01/80 ⇨
LADA 1.5	--	01/80 ⇨
NIVA I 1600	BA32121, BA32121	12/76 ⇨ 12/93
RIVA 1.5	--	01/85 ⇨
RIVA 1.6	--	01/85 ⇨

FACET 3.8716RS

3

ROTORS

Adatt./Suitable: ***U.D.S.S.R.***

LADA
2108-3706020

[03] **Supplied until depletion**
- Fornibile fino ad esaurimento delle scorte
- Fourni jusqu'à épuisement du stock
- Lieferbar solange vorrat reicht
- Suministrado hasta el stock termina

[212] **Resistance Rotor [Ohm] 1000**
- Rotore resistenza [Ohm] 1000
- Résitance roteur [ohm] 1000
- Widerstand-Rotor [Ohm] 1000
- Resistencia rotor [ohm] 1000

LADA		
SAMARA 1.5	--	01/97 ⇨
SAMARA 1100	BA321081	02/88 ⇨ 12/94
SAMARA 1300	BA32108	01/86 ⇨ 12/94
SAMARA 1500	BA321083	09/87 ⇨ 12/96

IGNITION CABLE SETS

-SERIE CAVI ACCENSIONE COMPLETA -JEUX CABLES D'ALLUMAGE -ZÜNDKABELSÄTZE - JUEGOS DE CABLES DE ENCENDIDO

(A) P/NRS. - NOTES

- CODICI - NOTE
- RÉFS. - NOTES
- ARTIKEL-NR. - ANMERKUNGEN
- CODIGOS - NOTAS

(B) PICTURE + TECHNICAL INFO

- FOTO + INFORMAZIONE TECNICA
- ILLUSTRATION + INFORMATION TÉCHNIQUE
- BILD + TECHNISCHE INFO
- FOTO + INFORMACIÓN TÉCNICA

(C) APPLICATION LIST

- GUIDA APPLICAZIONI
- LISTE D'APPLICATIONS
- ANWENDUNGSTABELLE
- LISTA DE APLICACIONES

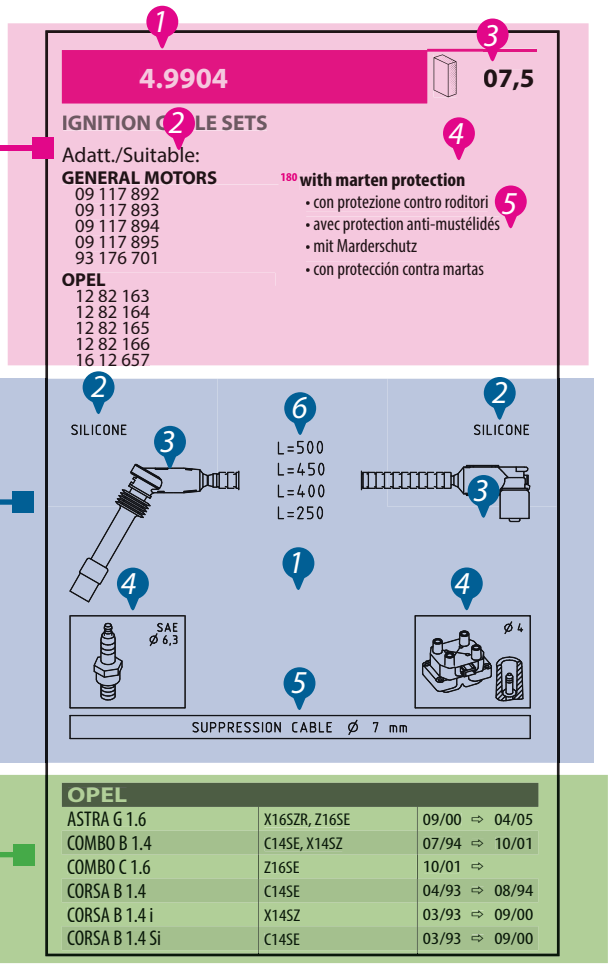

OPEL		
ASTRA G 1.6	X16SZR, Z16SE	09/00 ⇨ 04/05
COMBO B 1.4	C14SE, X14SZ	07/94 ⇨ 10/01
COMBO C 1.6	Z16SE	10/01 ⇨
CORSA B 1.4	C14SE	04/93 ⇨ 08/94
CORSA B 1.4 i	X14SZ	03/93 ⇨ 09/00
CORSA B 1.4 Si	C14SE	03/93 ⇨ 09/00

(A)

1. **# FACET**
2. **OEM P/NRS.**
   - Codici originali
   - Réfs. d'origine
   - Originalteile-Nr.
   - Codigos originales
3. **PACKAGING SIZE**
   - Formato confezione
   - Format du conditionnement
   - Abpackensgroesse
   - Tamaño del envase
4. **PRODUCT AVAILABILITY DATE**
   - Data di disponibilità del prodotto
   - DATE Disponibilité du produit
   - Produktverfuegbarkeitsdatum
   - FECHA Disponibilidad artículo
5. **NOTE**
   - Note
   - Notes
   - Bermerkungen
   - Notas

(B)

1. **PICTURE**
   - Foto - Photo - Bild - Foto
2. **MATERIAL OF BOOTS**
   - Materiale dei gommini
   - Matériel des capuchons
   - Material der steckerüllen
   - Material de los capuchones
3. **SUPPRESSOR**
   - Soppressore antidisturbo
   - Suppresseur anti-parasite
   - Entstörstecker
   - Supresor antiparasito
4. **CONNECTOR, SEE PAGE**
   - Innesto, VEDERE PAGINA
   - Connexion, VOIR PAGE
   - Anschluss, SIEHE SEITE
   - Anchufe, VÉASE PAGINA
5. **DIAMETER AND TYPE OF WIRE**
   - Diametro e tipo di cavo
   - Diamètre et type de cable
   - Durchmesser und Kabeltyp
   - Diametro y tipo de cable
6. **LENGTH IN mm OF SINGLE CABLE MEASURED AS SHOWN:**
   - Lunghezza in mm del singolo cavo così misurato:
   - Longueur en mm de chaque cable mesuré comme suit:
   - Einzelkabellänge in mm gemessen zie gezeigt:
   - Largo en mm de cada cable MEDIDO COMO SIGUE:

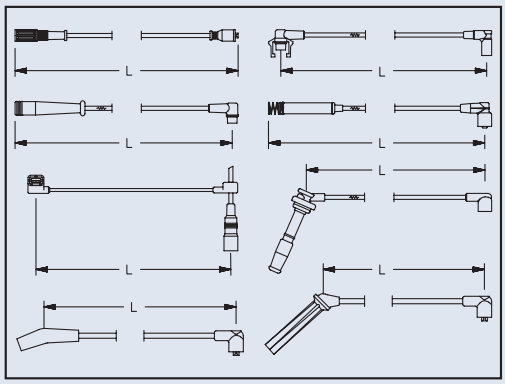

IGNITION CABLE SETS

•SERIE CAVI ACCENSIONE COMPLETA •JEUX CABLES D'ALLUMAGE -ZÜNDKABELSÄTZE • JUEGOS DE CABLES DE ENCENDIDO

ICON: CONNECTOR TYPES ON SPARK PLUGS - CAPS - COILS

- ***ICONE:*** INNESTI SU CANDELE - CALOTTE - BOBINE
- ***ICONE:*** CONNEXIONS SUR BOUGIES - TETES - BOBINES
- ***BESTIMMUNG*** DER STECKANSCHLÜSSE AUF ZÜNDKERZEN - VERTEILERKAPPEN - SPULEN
- ***ICONAS:*** ENCHUFES EN BUJIAS - TAPAS - BOBINAS

(B) 4

SPARK PLUG

- CANDELA
- BOUGIE
- KÜNDKERZE
- BUJIA

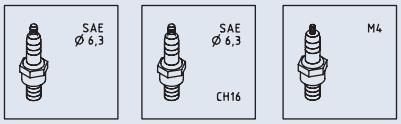

DISTRIBUTOR CAP

- CALOTTA
- TETE D'ALLUMEUR
- VERTEILERKAPPE
- TAPA DEL DISTRIBUIDOR

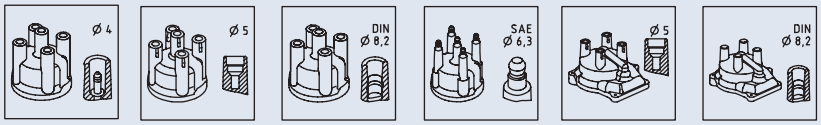

IGNITION COIL

- BOBINA
- BOBINE D'ALLUMAGE
- ZÜNDSPULE
- BOBINA DE ENCENDIDO

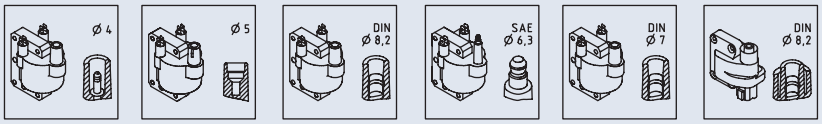

COIL FOR DISTRIBUTORLESS IGNITION

- BOBINA PER ACCENSIONE SENZA SPINTEROGENO
- BOBINE PUR ALLUMAGE SANS DISTRIBUTEUR
- SPULE FÜR VERTEILERLOSE ZÜNDSYSTEME
- BOBINA PARA ENCENDIDO SIN DISTRIBUIDOR

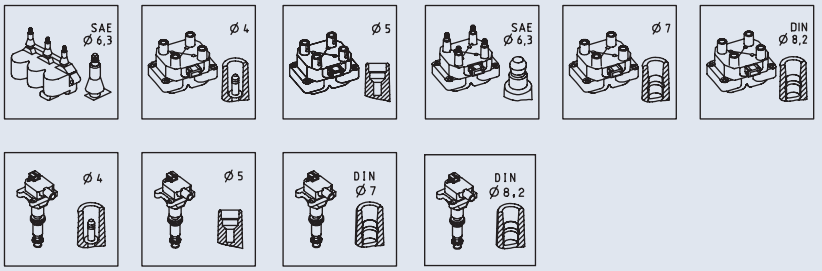

marketing@facet.it

FACET 4.7004 — 07,5

IGNITION CABLE SETS

Adatt./Suitable:

[03] **Supplied until depletion**
- Fornibile fino ad esaurimento delle scorte
- Fourni jusqu'à épuisement du stock
- Lieferbar solange vorrat reicht
- Suministrado hasta el stock termina

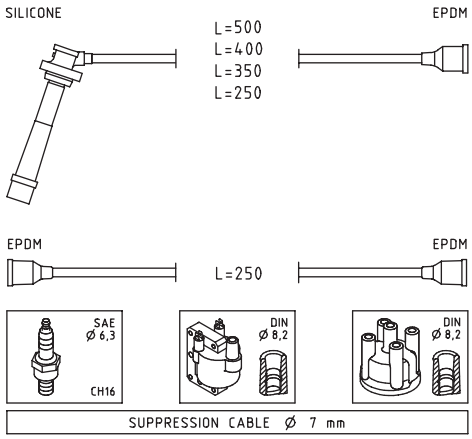

SUZUKI		
SIDEKICK 1.6 JX 4x4	G16A(8V)	04/89 ⇨ 04/96
VITARA I 1.6	G16A(8V), G16B	07/88 ⇨ 03/98
VITARA I 1.6 i 16V	G16B	07/90 ⇨ 03/99
VITARA I 1.6 i 16V Trazione integrale	G16B	07/90 ⇨ 03/98
VITARA I 1.6 Trazione integrale	G16A(8V)	07/88 ⇨ 03/98

FACET 4.7005 — 05

IGNITION CABLE SETS

Adatt./Suitable:

BOSCH
0 986 357 263
HITACHI
134987
SUZUKI
33705-66D00
33705-66D00-000
33705M79F00
33705M79F00-000

[00] **Eliminated on 09-03-2022. Please verify the availability through our local distributors**
- Eliminato il 09-03-2022. Verificare la disponibilità presso i nostri distributori
- Eliminé le 09-03-2022. Verifier la disponibilité auprès de nos distributeurs sur place
- Am 09-03-2022 gestrichen. Evtl. Verfügbarkeit bitte bei unseren Händlern prüfen
- Eliminado en fecha 09-03-2022. Verificar la disponibilidad a través de nuestros distribuidores locales

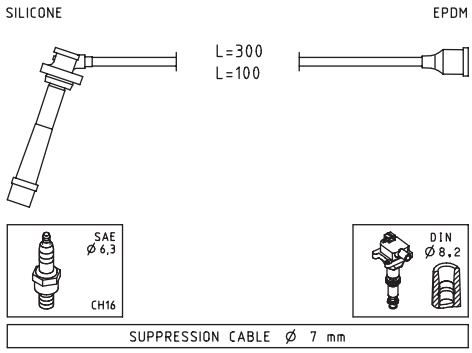

SUZUKI		
ALTO VI 1.1	6AR02150, F10DN	09/04 ⇨ 12/08
BALENO 1.3 16V	G13BB	03/97 ⇨ 05/02
BALENO 1.3 i 16V	G13BB	07/95 ⇨ 05/02
BALENO 1.6 i 16V	G16B	07/95 ⇨ 05/02
BALENO 1.6 i 16V 4x4	G16B	07/95 ⇨ 05/02
CARRY 1.3	G13BB	03/99 ⇨
CARRY 1.3 16 V	G13BB	03/00 ⇨
ESTEEM 1.6i [USA]	G16B	09/98 ⇨
GRAND VITARA I 1.6 4x4	G16B	02/00 ⇨ 09/02
JIMNY III 1.3 16V	G13BB	09/98 ⇨
JIMNY III 1.3 16V 4WD	G13BB	09/98 ⇨
JIMNY III 1.3 4x4	G13BB	09/98 ⇨ 08/00
SWIFT III 1.3 [USA]	--	06/95 ⇨ 05/01
VITARA I 1.6 16V	G16B	10/99 ⇨ 10/02
VITARA II 1.6i [USA]	--	08/99 ⇨ 12/06
WAGON R+ II 1.3	G13BB, M13A	05/00 ⇨
WAGON R+ II 1.3 4WD	G13BB	10/01 ⇨

FACET 4.7006 — 07

IGNITION CABLE SETS

Adatt./Suitable:

BOSCH
0 986 357 285
CHEVROLET
96288956
DAEWOO
96288956
GENERAL MOTORS
96 288 956
HITACHI
134260

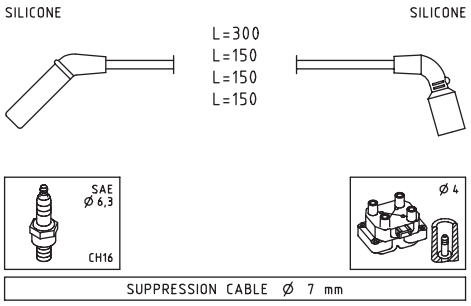

CHEVROLET		
AVEO I 1.2	B12S1, F12S3, LQ5, LY4	03/05 ⇨
KALOS 1.2	B12S1	03/05 ⇨
MATIZ 1.0	B10S, B10S1, LQ4(61CUL4)	03/05 ⇨
MATIZ 1.0 LPG	B10S1	03/05 ⇨ 03/11
SPARK I 1.0	G10CV	11/02 ⇨ 12/04
SPARK II 1.0 LPG	B10S	05/05 ⇨
SPARK II 1.0 SX	B10S, B10S1, LA2	05/05 ⇨

DAEWOO		
KALOS 1.2	B12S1, F12S3	04/03 ⇨
MATIZ 1.0	B10S	01/03 ⇨

FACET 4.7007 — 05

IGNITION CABLE SETS

Adatt./Suitable:

CHEVROLET
96291306
DAEWOO
96291306
GENERAL MOTORS
96 291 306
HITACHI
134263

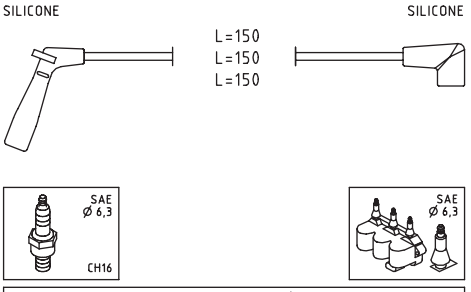

CHEVROLET		
MATIZ 0.8	LBF(49CUL3), LQ2(49CUL3)	03/05 ⇨ 12/13
MATIZ 0.8 LPG	F8CV	03/05 ⇨ 12/07
SPARK I 0.8	F8CV	09/00 ⇨ 12/06
SPARK II 0.8	F8CV	05/05 ⇨ 02/10

DAEWOO		
MATIZ 0.8	F8CV	08/98 ⇨

FACET 4.7013 — 07

IGNITION CABLE SETS

Adatt./Suitable:

FIAT
71742423
SUZUKI
33705-80G00-000
33705-86G00-000

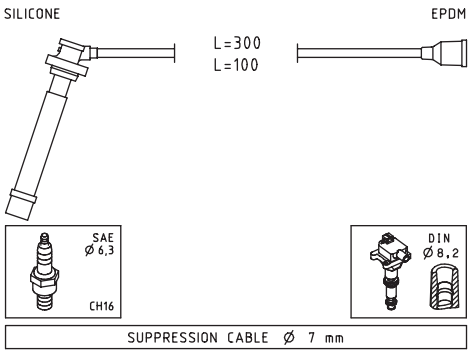

FIAT		
SEDICI 1.6 16V	M16A	06/06 ⇨ 10/14
SEDICI 1.6 16V 4x4	M16A	06/06 ⇨ 10/14

SUZUKI		
GRAND VITARA II 1.6 4x4	M16A	09/05 ⇨ 02/15
GRAND VITARA II 1.6 Trazione integrale	M16A	04/05 ⇨ 02/15
SWIFT IV 1.3	M13A	02/05 ⇨
SWIFT IV 1.3 4x4	M13A	02/05 ⇨
SWIFT IV 1.5	M15A	02/05 ⇨
SWIFT IV 1.5 4x4	M15A	02/05 ⇨
SWIFT IV 1.6	M16A	05/06 ⇨
SWIFT IV 1.6 4x4	M16A	02/05 ⇨
IGNIS I 1.3	M13A	10/00 ⇨ 09/03
IGNIS I 1.3 4WD	M13A	10/00 ⇨ 09/03
IGNIS I 1.5 Sport	M15A	12/03 ⇨ 12/05
IGNIS II 1.3	M13A	09/03 ⇨
IGNIS II 1.3 4x4	M13A	09/03 ⇨
IGNIS II 1.5	M15A	09/03 ⇨
IGNIS II 1.5 4x4	M15A	09/03 ⇨
JIMNY III 1.3 16V	M13A	02/01 ⇨
JIMNY III 1.3 16V 4WD	M13A	02/01 ⇨
JIMNY III 1.3 16V 4x4	M13A	08/05 ⇨
JIMNY III 1.3 4WD	M13A	05/14 ⇨
LIANA 1.3	M13A	07/01 ⇨
LIANA 1.6	M16A	07/01 ⇨
LIANA 1.6 4WD	M16A	07/01 ⇨
LIANA 1.6 i	M16A	04/02 ⇨
LIANA 1.8 i	M18A	10/01 ⇨
SX4 I 1.5	M15A	06/06 ⇨ 07/10
SX4 I 1.5 VVT	M15A	07/10 ⇨
SX4 I 1.5 VVT 4x4	M15A	07/10 ⇨
SX4 I 1.6	M16A	06/06 ⇨
SX4 I 1.6 AWD	M16A	10/07 ⇨
SX4 I 1.6 VVT	M16A	06/06 ⇨
SX4 I 1.6 VVT 4x4	M16A	06/06 ⇨
WAGON R+ II 1.3	M13A	09/03 ⇨
WAGON R+ II 1.3 4WD	M13A	09/03 ⇨

FACET 4.7020 — 07

IGNITION CABLE SETS

Adatt./Suitable:

HOLDEN
3370083010

SUZUKI
33700-80001
33700-80001-000
33700-80012
33700-80012-000
33700-82610
33700-82610-000
33700-83010
33700-83010-000
33705-80040
33705-80040-000
33710-80010
33710-80010-000

[03] **Supplied until depletion**
- Fornibile fino ad esaurimento delle scorte
- Fourni jusqu'à épuisement du stock
- Lieferbar solange vorrat reicht
- Suministrado hasta el stock termina

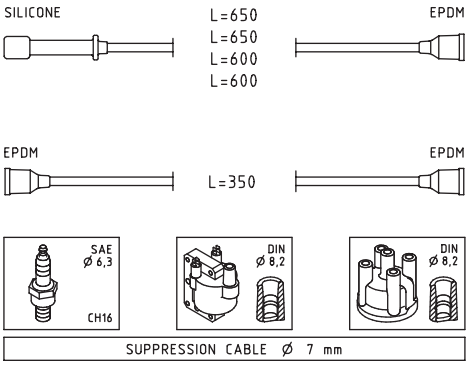

HOLDEN		
DROVER QB 1.3	G13A	02/85 ⇨ 12/87
SUZUKI		
SA413 1.3	--	01/84 ⇨
SJ410 1.0	F10A	09/81 ⇨ 07/91
SJ413 1.3	G13A	09/84 ⇨ 08/90

FACET 4.7028 — 07,5

IGNITION CABLE SETS

Adatt./Suitable:

[00] **Eliminated on 22-02-2022. Please verify the availability through our local distributors**
- Eliminato il 22-02-2022. Verificare la disponibilità presso i nostri distributori
- Eliminé le 22-02-2022. Verifier la disponibilité auprès de nos distributeurs sur place
- Am 22-02-2022 gestrichen. Evtl. Verfügbarkeit bitte bei unseren Händlern prüfen
- Eliminado en fecha 22-02-2022. Verificar la disponibilidad a través de nuestros distribuidores locales

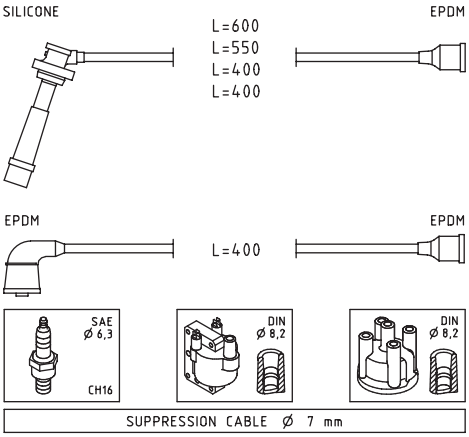

SUZUKI		
WAGON R II 1.0	K10A	02/98 ⇨ 05/00
WAGON R II 1.2	K12A	02/98 ⇨ 05/00
WAGON R II 1.2 4WD	K12A	02/98 ⇨ 05/00

FACET 4.7049

IGNITION CABLE SETS

Adatt./Suitable:

RENAULT
82 00 122 243

[03] **Supplied until depletion**
- Fornibile fino ad esaurimento delle scorte
- Fourni jusqu'à épuisement du stock
- Lieferbar solange vorrat reicht
- Suministrado hasta el stock termina

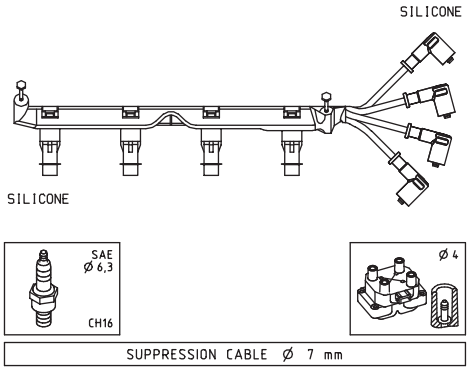

RENAULT		
LAGUNA II 2.0 16V IDE	F5R700	04/01 ⇨ 09/07
MEGANE I 2.0 16V IDE	F5R740	11/99 ⇨ 08/03

FACET 4.7059 — 07

IGNITION CABLE SETS

Adatt./Suitable:

HITACHI
134958

MAGNETI MARELLI
941215240807

VOLVO
1275603

[03] **Supplied until depletion**
- Fornibile fino ad esaurimento delle scorte
- Fourni jusqu'à épuisement du stock
- Lieferbar solange vorrat reicht
- Suministrado hasta el stock termina

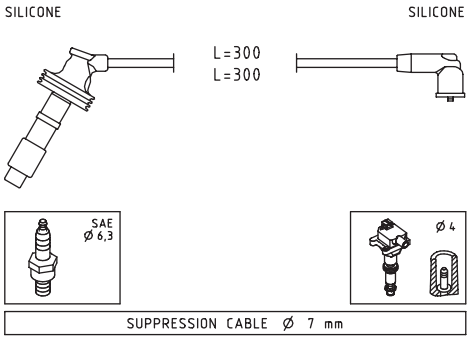

VOLVO		
S40 I 1.6	B4164S2	03/99 ⇨ 12/03
S40 I 1.8	B4184S2, B4184S3, B4184S9	06/01 ⇨ 12/03
S40 I 1.8 16V	B4184S10	08/00 ⇨
S40 I 1.9 T4	B4194T, B4194T2	05/97 ⇨ 07/00
S40 I 2.0	B4204S2	07/95 ⇨ 12/03
S40 I 2.0 T	B4204T, B4204T2, B4204T3	06/01 ⇨ 12/03
S40 I 2.0 T4	B4204T5	07/00 ⇨ 12/03
V40 I 1.6	B4164S2	03/99 ⇨ 06/04
V40 I 1.8	B4184S2, B4184S3, B4184S9	03/99 ⇨ 06/04
V40 I 1.8 16V	B4184S10	08/00 ⇨
V40 I 1.9 T4	B4194T, B4194T2	05/97 ⇨ 07/00
V40 I 2.0	B4204S2	07/95 ⇨ 06/04
V40 I 2.0 T	B4204T, B4204T2, B4204T3	06/01 ⇨ 06/04
V40 I 2.0 T4	B4204T5	07/00 ⇨ 06/04

FACET 4.7061 — 08

IGNITION CABLE SETS

Adatt./Suitable:

BOSCH
0 986 357 238

HITACHI
134560

RENAULT
74 31 275 284

VOLVO
1275284
12752846

[03] **Supplied until depletion**
- Fornibile fino ad esaurimento delle scorte
- Fourni jusqu'à épuisement du stock
- Lieferbar solange vorrat reicht
- Suministrado hasta el stock termina

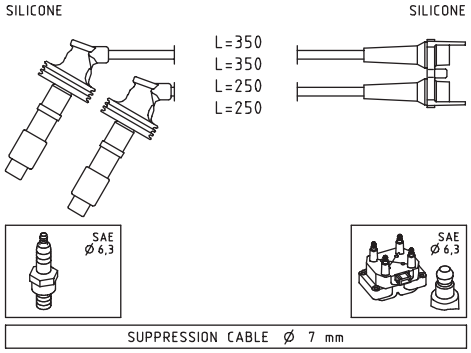

RENAULT		
LAGUNA I 2.0	N7Q700, N7Q704	06/95 ⇨ 02/01
LAGUNA I 2.0 16V	N7Q700, N7Q704	06/95 ⇨ 03/01
SAFRANE II 2.0 16V	N7Q710, N7Q711	07/96 ⇨ 12/00
VOLVO		
S40 I 1.6	B4164S	09/95 ⇨ 08/99
S40 I 1.8	B4184S	07/95 ⇨ 08/99
S40 I 2.0	B4204S	07/95 ⇨ 08/99
V40 I 1.6	B4164S	12/95 ⇨ 08/99
V40 I 1.8	B4184S, B4184S3	07/95 ⇨ 08/99
V40 I 2.0	B4204S	07/95 ⇨ 08/99

FACET 4.7064 — 08

IGNITION CABLE SETS

Adatt./Suitable:

[03] **Supplied until depletion**
- Fornibile fino ad esaurimento delle scorte
- Fourni jusqu'à épuisement du stock
- Lieferbar solange vorrat reicht
- Suministrado hasta el stock termina

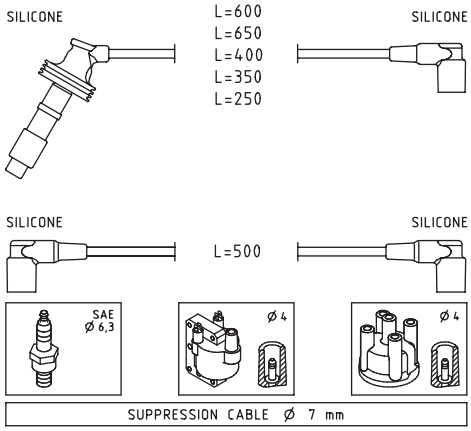

RENAULT		
SAFRANE II 2.5 20V	N7U700, N7U701	07/96 ⇨ 12/00
VOLVO		
850 2.0	B5202S, B5204F, B5204FS	06/91 ⇨ 12/96
850 2.0 10V	B5202FS	08/94 ⇨ 12/97
850 2.0 Turbo	B5204FT, B5204T, B5204T2	02/93 ⇨ 10/97
850 2.3	B5234FS	01/96 ⇨ 10/96
850 2.3 T5	9M9T872	02/93 ⇨ 12/96
850 2.3 T5-R	B5234T4	08/95 ⇨ 12/96
850 2.3 Turbo R	B5234T5	06/95 ⇨ 10/97
850 2.4	B5252, B5252FS, B5254S	06/91 ⇨ 12/96
850 2.4 AWD	B5254T	04/96 ⇨ 12/96
850 2.4 GLE	B5254T	09/93 ⇨ 10/97

VOLVO		
850 2.5 10V	B5252FS	06/91 ⇨ 12/97
850 2.5 20V	B5254FS	08/91 ⇨ 12/97
C70 I 2.0	B5204T2	03/97 ⇨ 10/05
C70 I 2.0 T	B5204T3	03/97 ⇨ 10/05
C70 I 2.3 T5	B5234T3	03/98 ⇨ 10/05
C70 I 2.3 T-5	B5234T3	03/97 ⇨ 09/02
C70 I 2.4 T	B5254T	03/97 ⇨ 10/05
S70 2.0	B5202FS, B5202S, B5204T2	01/97 ⇨ 11/00
S70 2.0 Turbo	B5204T3	01/97 ⇨ 11/00
S70 2.3	B5234FS, B5234T7	01/97 ⇨ 07/99
S70 2.3 AWD	B5234T7	04/99 ⇨ 09/00
S70 2.3 T-5	B5234T3	01/97 ⇨ 11/00
S70 2.3 T5 AWD	B5234T4	07/97 ⇨ 09/00
S70 2.3 T5-R AWD	B5234T2	11/96 ⇨ 09/98
S70 2.3 Turbo	B5234FT+	01/97 ⇨ 11/00
S70 2.4	B5254S	06/98 ⇨ 11/00
S70 2.4 AWD	B5252FS	11/96 ⇨ 05/99
S70 2.4 Bifuel	GB5252S	10/98 ⇨ 11/00
S70 2.4 T5 AWD	B5254T	11/96 ⇨ 04/99
S70 2.4 Turbo	B5254T	01/97 ⇨ 11/00
S70 2.5 20V	B5254FS	01/97 ⇨ 12/98
S70 2.5 Bifuel	GB5252S2	01/99 ⇨ 12/99
V70 I 2.0	B5202FS, B5202S, B5204T2	12/95 ⇨ 03/00
V70 I 2.0 Turbo	B5204T3	11/96 ⇨ 12/00
V70 I 2.0 Turbo AWD	B5204T3	11/96 ⇨ 12/00
V70 I 2.3	B5234FS	01/97 ⇨ 07/99
V70 I 2.3 AWD	B5234T3, B5234T7	04/97 ⇨ 09/98
V70 I 2.3 T AWD	B5234FT+, B5234T4, B5234T6	04/97 ⇨ 12/98
V70 I 2.3 T-5	B5234T3	11/96 ⇨ 12/00
V70 I 2.3 T-5 AWD	B5234T3	01/97 ⇨ 12/00
V70 I 2.3 Turbo	B5234FT+, B5234T2, B5234T4	12/95 ⇨ 12/98
V70 I 2.4	B5254S	06/98 ⇨ 12/99
V70 I 2.4 Bifuel	GB5252S	05/98 ⇨ 12/99
V70 I 2.4 Turbo AWD	B5254T	04/96 ⇨ 12/00
V70 I 2.5	B5252FS	01/97 ⇨ 03/00
V70 I 2.5 20V	B5254FS	01/97 ⇨ 12/99
V70 I 2.5 Bifuel	GB5252S2	01/99 ⇨ 12/99

FACET 4.7069

07

IGNITION CABLE SETS

Adatt./Suitable:

[00] **Eliminated on 26-01-2021. Please verify the availability through our local distributors**

- Eliminato il 26-01-2021. Verificare la disponibilità presso i nostri distributori
- Eliminé le 26-01-2021. Verifier la disponibilité auprès de nos distributeurs sur place
- Am 26-01-2021 gestrichen. Evtl. Verfügbarkeit bitte bei unseren Händlern prüfen
- Eliminado en fecha 26-01-2021. Verificar la disponibilidad a través de nuestros distribuidores locales

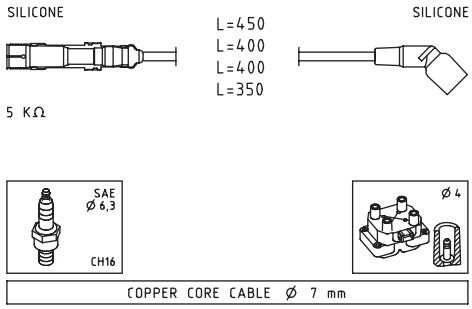

BMW		
3 IV 316 Ci	M43B16(164E3)	04/00 ⇨ 07/06
3 IV 316 i	M43B16(164E3), M43B19(194E1)	04/00 ⇨ 02/05
3 IV 318 Ci	M43B19(194E1)	12/99 ⇨ 08/01
3 IV 318 i	M43B19(194E1)	12/97 ⇨ 09/01

FACET 4.7100

07,5

IGNITION CABLE SETS

Adatt./Suitable:

[00] **Eliminated on 20-05-2019. Please verify the availability through our local distributors**

- Eliminato il 20-05-2019. Verificare la disponibilità presso i nostri distributori
- Eliminé le 20-05-2019. Verifier la disponibilité auprès de nos distributeurs sur place
- Am 20-05-2019 gestrichen. Evtl. Verfügbarkeit bitte bei unseren Händlern prüfen
- Eliminado en fecha 20-05-2019. Verificar la disponibilidad a través de nuestros distribuidores locales

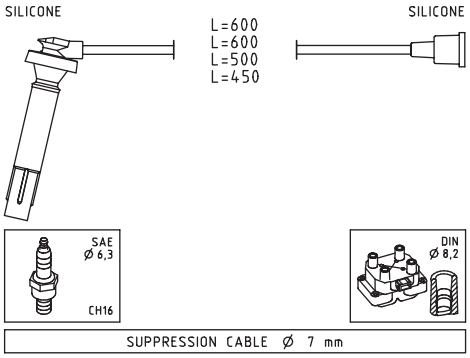

SUBARU		
LEGACY IV 2.0 AWD	EJ202	09/03 ⇨ 10/05
OUTBACK III 2.0	EJ202	09/03 ⇨ 10/05
OUTBACK III 2.0 AWD	EJ202	09/03 ⇨ 10/05

FACET 4.7106

07,5

IGNITION CABLE SETS

Adatt./Suitable:

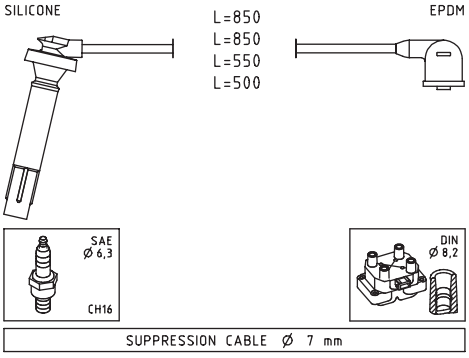

SUBARU		
FORESTER III 2.5	EJ253	01/08 ⇨
FORESTER II 2.5	EJ253	02/02 ⇨
LEGACY IV 2.5 AWD	EJ25	09/03 ⇨ 04/09
LEGACY IV 2.5 i	EJ252, EJ253	05/03 ⇨
LEGACY IV 2.5 i AWD	EJ25	09/07 ⇨ 12/09
OUTBACK III 2.5	EJ252, EJ253	09/08 ⇨ 09/09

FACET 4.7107

07,5

IGNITION CABLE SETS

Adatt./Suitable:

[00] **Eliminated on 22-02-2022. Please verify the availability through our local distributors**

- Eliminato il 22-02-2022. Verificare la disponibilità presso i nostri distributori
- Eliminé le 22-02-2022. Verifier la disponibilité auprès de nos distributeurs sur place
- Am 22-02-2022 gestrichen. Evtl. Verfügbarkeit bitte bei unseren Händlern prüfen
- Eliminado en fecha 22-02-2022. Verificar la disponibilidad a través de nuestros distribuidores locales

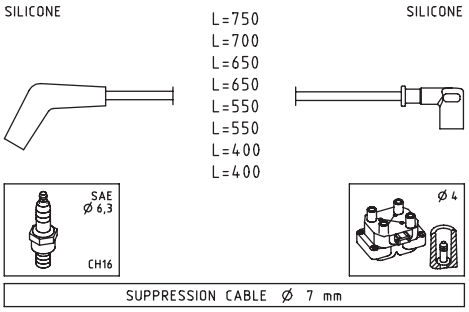

LAND ROVER		
DISCOVERY II 4.0 V8 4x4	35D, 56D, 94D	11/98 ⇨ 06/04
DISCOVERY II 4.6 V8 [USA]	--	01/03 ⇨ 06/04
RANGE ROVER II 3.9 4x4	42D	07/94 ⇨ 03/02
RANGE ROVER II 4.0 4x4	42D	01/95 ⇨ 03/02
RANGE ROVER II 4.6 4x4	46D	07/94 ⇨ 03/02

FACET 4.7111

07,5

IGNITION CABLE SETS

Adatt./Suitable:

HYUNDAI
27501-26A00
27501-26C00
27501-26D00

KIA
27501-26D00

[03] **Supplied until depletion**

- Fornibile fino ad esaurimento delle scorte
- Fourni jusqu'à épuisement du stock
- Lieferbar solange vorrat reicht
- Suministrado hasta el stock termina

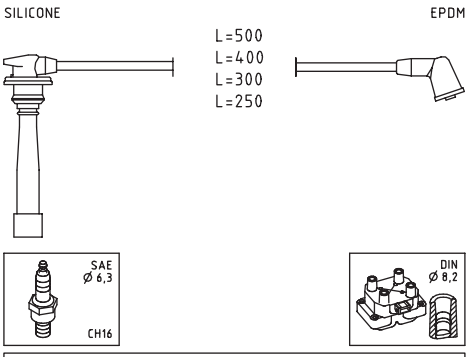

HYUNDAI		
ACCENT I 1.5 i 16V	G4ER	10/95 ⇨ 01/00
ACCENT II 1.5	G4EC-G	09/99 ⇨ 11/05
ACCENT II 1.6	G4ED-G	12/02 ⇨ 11/05
COUPE I 1.6 16V	G4GR	03/98 ⇨ 04/02
COUPE I 1.6 i 16V	4G61	12/96 ⇨ 04/02
ELANTRA III 1.6	G4ED-G, G4GA, G4GR	06/00 ⇨ 07/06
EXCEL 1.5 i 16V GT	G4ER	10/96 ⇨ 08/99
GETZ 1.4 i	G4EE	08/05 ⇨ 12/10
GETZ 1.6	G4ED-G	09/02 ⇨ 06/09
LAVITA 1.6	--	01/07 ⇨
MATRIX 1.6	G4ED-G, G4ED-L	06/01 ⇨ 08/10
MATRIX 1.6 [TUR]	G4ED	04/08 ⇨
ACCENT III 1.4 GL	G4EE	11/05 ⇨ 11/10
ACCENT III 1.6 GLS	G4ED	11/05 ⇨ 11/10
COUPE II 1.6 16V	G4ED-G	03/02 ⇨ 08/09
VERNA I 1.5	G4EC-G	09/99 ⇨

HYUNDAI		
VERNA I 1.6	G4ED-G	12/02 ⇨
VERNA II 1.4 GL	--	11/05 ⇨
VERNA II 1.6 GLS	--	11/05 ⇨
KIA		
CERATO I 1.6	G4ED	04/04 ⇨ 12/09
RIO II 1.4 16V	G4EE	03/05 ⇨ 12/11
RIO II 1.6 16V	G4ED	03/05 ⇨ 12/11
RIO II 1.6 CVVT	G4ED	03/05 ⇨ 12/11

FACET 4.7119 — 07

IGNITION CABLE SETS

Adatt./Suitable:

BOSCH
0 986 356 898
F 000 99C 609

HYUNDAI
27501-02H00
27501-22B00
27501-22B10

KIA
27501-02H00

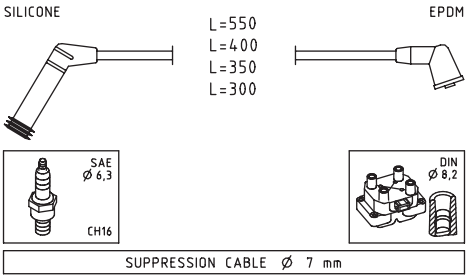

HYUNDAI		
ACCENT I 1.3	G4EH	10/94 ⇨ 01/00
ACCENT I 1.3 i 12V	G4EH	10/94 ⇨ 01/00
ACCENT I 1.5	G4EK	10/94 ⇨ 07/99
ACCENT I 1.5 i 12V	G4EK	10/94 ⇨ 01/00
ACCENT II 1.3	G4EA, G4EH	01/00 ⇨ 11/05
ACCENT II 1.5	G4EB, G4EK	01/00 ⇨ 11/05
ATOS 1.0 i	G4HC-E	03/01 ⇨ 07/03
ATOS 1.1	G4HD, G4HG	06/03 ⇨ 12/10
ATOS PRIME 1.0 i	G4HC-E	03/01 ⇨ 07/03
ATOS PRIME 1.1	G4HD, G4HG	08/03 ⇨ 12/08
EXCEL 1.3 i 12V	G4EH	09/94 ⇨ 08/99
EXCEL 1.5 i 12V	G4EK	09/94 ⇨ 08/99
GETZ 1.1	G4HD	09/02 ⇨ 09/05
GETZ 1.3	G4EA	09/03 ⇨ 06/09
GETZ 1.3 i	G4EA	09/02 ⇨ 03/04
LANTRA II 1.5 12V	G4EK	12/96 ⇨ 10/00
SANTRO 1.1	G4HD	01/03 ⇨
S COUPE 1.5 i	G4EK	04/92 ⇨ 05/96
S COUPE 1.5 i Turbo	G4EK-TC	04/91 ⇨ 05/96
VERNA I 1.3	G4EA	09/99 ⇨
VERNA I 1.5	G4EB	09/99 ⇨
KIA		
PICANTO I 1.0	--, G4HE	04/04 ⇨
PICANTO I 1.1	G4HG	04/04 ⇨ 09/11

FACET 4.7120 — 07

IGNITION CABLE SETS

Adatt./Suitable:

BOSCH
0 986 356 990

HYUNDAI
27501-02A00

[03] **Supplied until depletion**
- Fornibile fino ad esaurimento delle scorte
- Fourni jusqu'à épuisement du stock
- Lieferbar solange vorrat reicht
- Suministrado hasta el stock termina

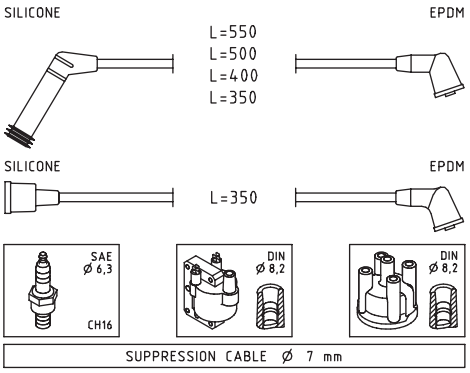

HYUNDAI		
ATOS 1.0 i	G4HC	02/98 ⇨ 03/02
ATOS PRIME 1.0 i	G4HC	08/99 ⇨

FACET 4.7159 — 07,5

IGNITION CABLE SETS

Adatt./Suitable:

[00] **Eliminated on 27-09-2021. Please verify the availability through our local distributors**
- Eliminato il 27-09-2021. Verificare la disponibilità presso i nostri distributori
- Eliminé le 27-09-2021. Verifier la disponibilité auprès de nos distributeurs sur place
- Am 27-09-2021 gestrichen. Evtl. Verfügbarkeit bitte bei unseren Händlern prüfen
- Eliminado en fecha 27-09-2021. Verificar la disponibilidad a través de nuestros distribuidores locales

[03] **Supplied until depletion**
- Fornibile fino ad esaurimento delle scorte
- Fourni jusqu'à épuisement du stock
- Lieferbar solange vorrat reicht
- Suministrado hasta el stock termina

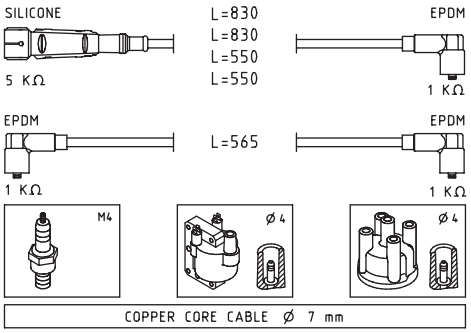

VW		
TRANSPORTER III 1.9	DF, DG	08/82 ⇨ 07/92
TRANSPORTER III 1.9 Syncro	DG	11/84 ⇨ 07/92
TRANSPORTER III 2.1	DJ	08/84 ⇨ 07/92
TRANSPORTER III 2.1 Syncro	DJ	01/86 ⇨ 07/92

FACET 4.7170 — 07

IGNITION CABLE SETS

Adatt./Suitable:

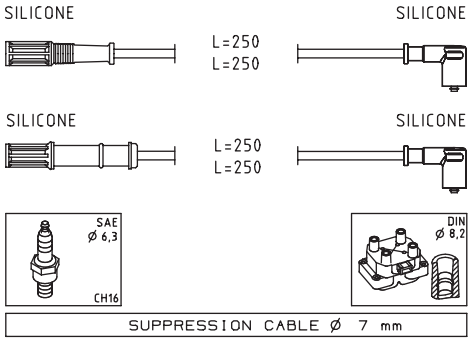

ALFA ROMEO		
MITO 1.4	04Y, 350A1.000, 955A9.000	08/08 ⇨
FIAT		
500 1.2	169A4.000	07/07 ⇨
500 C 1.2	169A4.000	09/09 ⇨
PUNTO III EVO 1.2	169A4.000, 199A4.000	10/09 ⇨ 02/12
PUNTO III EVO 1.4	350A1.000, 8S8Y1	03/09 ⇨
PUNTO III EVO 1.4 LPG	350A1.000	06/09 ⇨ 02/12
PUNTO III EVO 1.4 Natural Power	350A1.000	10/09 ⇨ 02/12
500 MY12 1.2	--	01/12 ⇨
PUNTO III 1.2	169A4.000, 199B9.000	03/12 ⇨
PUNTO III 1.4	350A1.000	03/12 ⇨
PUNTO III 1.4 LPG	350A1.000	03/12 ⇨
PUNTO III 1.4 Natural Power	350A1.000	03/09 ⇨
FIORINO III 1.4	350A1.000, KFT, KFV	11/07 ⇨
FIORINO III 1.4 Natural Power	350A1.000	06/08 ⇨
DOBLO I 1.4	350A1.000	10/05 ⇨
PANDA III 1.2	169A4.000	02/12 ⇨
PANDA III 1.2 LPG	169A4.000	06/12 ⇨
IDEA 1.4	350A1.000	10/05 ⇨
LINEA 1.4	350A1.000	06/07 ⇨
PALIO 1.4	834A1.000	06/03 ⇨
PANDA II 1.2	169A4.000	03/10 ⇨
PANDA II 1.2 4x4	169A4.000	04/10 ⇨
PANDA II 1.2 Euro 5	--	04/09 ⇨
PANDA II 1.4 16V	--	01/10 ⇨
PANDA II 1.4 Natural Power	350A1.000	10/09 ⇨
PUNTO III / GRANDE PUNTO 1.2	169A4.000, 199A4.000	10/05 ⇨
PUNTO III / GRANDE PUNTO 1.2 [IND]	--	01/08 ⇨
PUNTO III / GRANDE PUNTO 1.2 Actual	--	09/09 ⇨
PUNTO III / GRANDE PUNTO 1.2 LPG	199A4.000	06/08 ⇨ 12/12
PUNTO III / GRANDE PUNTO 1.4	350A1.000, 8S8Y1	06/05 ⇨ 12/15
PUNTO III / GRANDE PUNTO 1.4 Actual	--	09/09 ⇨
PUNTO III / GRANDE PUNTO 1.4 LPG	350A1.000	12/08 ⇨
PUNTO III / GRANDE PUNTO 1.4 Natural Power	350A1.000	07/08 ⇨
QUBO 1.4	350A1.000, KFT, KFV	02/08 ⇨
QUBO 1.4 Natural Power	350A1.000	10/09 ⇨
500 MY15 1.2	--	01/15 ⇨
500 MY15 1.2 LPG	--	01/15 ⇨
SIENA 1.4	--	01/02 ⇨
FORD		
KA II 1.2	FP4	10/08 ⇨ 05/16
LANCIA		
MUSA 1.4	350A1.000	09/05 ⇨ 09/12
MUSA 1.4 8V	--	01/11 ⇨ 12/12
YPSILON II 1.4	350A1.000	02/06 ⇨ 12/11
YPSILON II 1.4 LPG	350A1.000	11/10 ⇨ 12/11
YPSILON III 1.2	169A4.000	05/11 ⇨
YPSILON III 1.2 Bi-fuel	169A4.000	05/11 ⇨

FACET 4.7181 — 07,5

IGNITION CABLE SETS

Adatt./Suitable:

JEEP
4728190
4728190AC

[00] **Eliminated on 22-02-2022. Please verify the availability through our local distributors**

- Eliminato il 22-02-2022. Verificare la disponibilità presso i nostri distributori
- Eliminé le 22-02-2022. Verifier la disponibilité auprès de nos distributeurs sur place
- Am 22-02-2022 gestrichen. Evtl. Verfügbarkeit bitte bei unseren Händlern prüfen
- Eliminado en fecha 22-02-2022. Verificar la disponibilidad a través de nuestros distribuidores locales

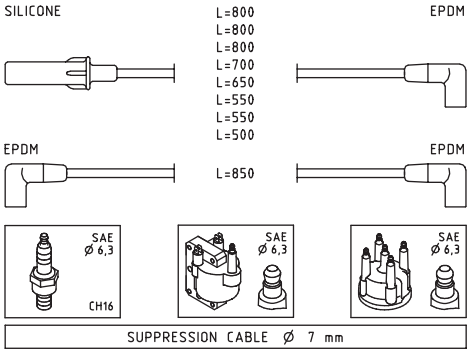

JEEP		
GRAND CHEROKEE 5.2	ELF	10/96 ⇨ 09/98
GRAND CHEROKEE 5.2 4x4	ELF	10/96 ⇨ 09/98
GRAND CHEROKEE 5.2 i	EHY	10/90 ⇨ 09/96
GRAND CHEROKEE 5.9 i	EML	10/96 ⇨ 09/98

FACET 4.7195 — 07

IGNITION CABLE SETS

Adatt./Suitable:

[00] **Eliminated on 04-05-2020. Please verify the availability through our local distributors**

- Eliminato il 04-05-2020. Verificare la disponibilità presso i nostri distributori
- Eliminé le 04-05-2020. Verifier la disponibilité auprès de nos distributeurs sur place
- Am 04-05-2020 gestrichen. Evtl. Verfügbarkeit bitte bei unseren Händlern prüfen
- Eliminado en fecha 04-05-2020. Verificar la disponibilidad a través de nuestros distribuidores locales

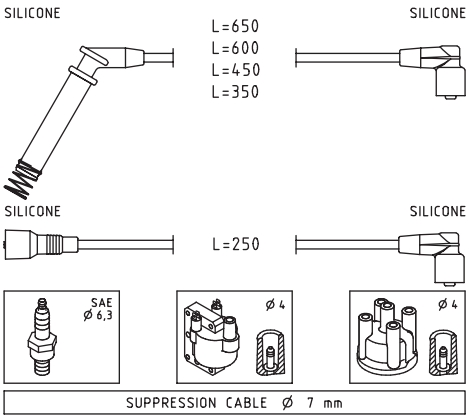

OPEL		
COMBO B 1.2	C12NZ, X12SZ	07/94 ⇨ 10/01
COMBO B 1.4	C14NZ	07/94 ⇨ 10/01
CORSA B 1.2 i	12NZ, C12NZ, X12SZ	03/93 ⇨ 09/00
CORSA B 1.4 i	C14NZ	03/93 ⇨ 09/00
VAUXHALL		
COMBO B 1.2	C12NZ, X12SZ	07/94 ⇨ 10/01
COMBO B 1.4	C14NZ	07/94 ⇨ 10/01

VAUXHALL		
CORSA B 1.2 i	C12NZ, X12SZ	03/93 ⇨ 09/00
CORSA B 1.4 i	C14NZ	03/93 ⇨ 09/00
CORSAVAN I 1.4 i	C14NZ	01/94 ⇨ 09/00

FACET 4.7199 — 07

IGNITION CABLE SETS

Adatt./Suitable:

[00] **Eliminated on 22-02-2022. Please verify the availability through our local distributors**

- Eliminato il 22-02-2022. Verificare la disponibilità presso i nostri distributori
- Eliminé le 22-02-2022. Verifier la disponibilité auprès de nos distributeurs sur place
- Am 22-02-2022 gestrichen. Evtl. Verfügbarkeit bitte bei unseren Händlern prüfen
- Eliminado en fecha 22-02-2022. Verificar la disponibilidad a través de nuestros distribuidores locales

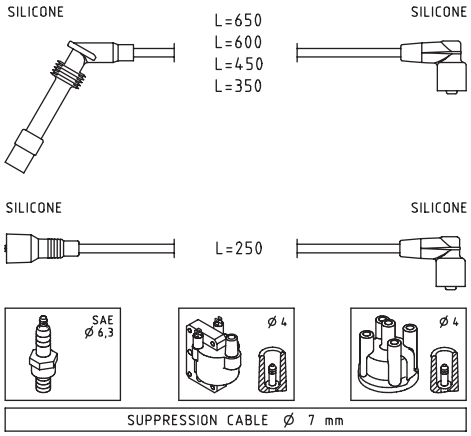

OPEL		
COMBO B 1.2	C12NZ, X12SZ	07/94 ⇨ 10/01
COMBO B 1.4	C14NZ	07/94 ⇨ 10/01
CORSA B 1.2 i	12NZ, C12NZ, X12SZ	03/93 ⇨ 09/00
CORSA B 1.4 i	C14NZ	03/93 ⇨ 09/00
VAUXHALL		
COMBO B 1.2	C12NZ, X12SZ	07/94 ⇨ 10/01
COMBO B 1.4	C14NZ	07/94 ⇨ 10/01
CORSA B 1.2 i	C12NZ, X12SZ	03/93 ⇨ 09/00
CORSA B 1.4 i	C14NZ	03/93 ⇨ 09/00
CORSAVAN I 1.4 i	C14NZ	01/94 ⇨ 09/00

FACET 4.7208 — 07

IGNITION CABLE SETS

Adatt./Suitable:

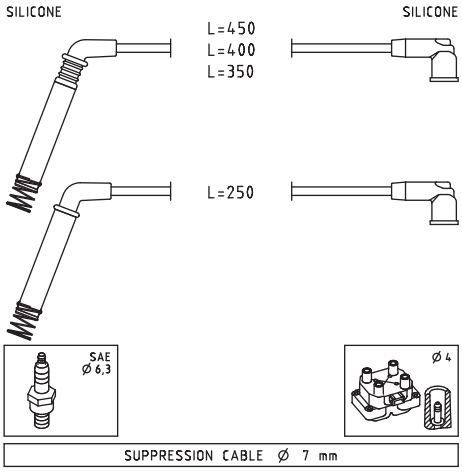

FORD		
FIESTA V 1.3	A9JA, A9JB, BAJA	11/01 ⇨ 06/08
FOCUS I 1.6 16V Flexifuel	FYDH	01/02 ⇨ 11/04
FUSION 1.3	--, BAJA	08/02 ⇨
KA I 1.3 i	BAA	09/96 ⇨ 11/08
KA I 1.3 i ROCAM	A9A, A9B	08/02 ⇨ 11/08
KA I 1.6	CDB, CDC	09/00 ⇨ 11/08
KA I 1.6 i	CCA, CDB, CDC	02/01 ⇨ 11/08
STREET KA 1.6	CDRA, CDRB	05/03 ⇨ 07/05

FACET 4.7214 — 07,5

IGNITION CABLE SETS

Adatt./Suitable:

[03] **Supplied until depletion**

- Fornibile fino ad esaurimento delle scorte
- Fourni jusqu'à épuisement du stock
- Lieferbar solange vorrat reicht
- Suministrado hasta el stock termina

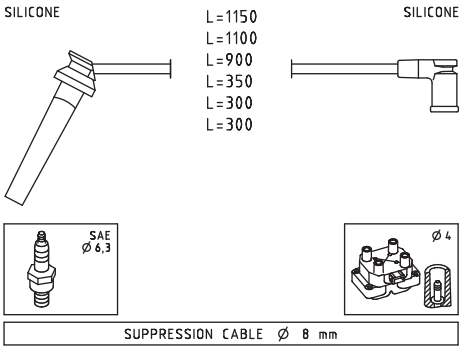

FORD		
MONDEO II 3.0 V6 24V	REBA	09/04 ⇨ 03/07
MONDEO II ST220	MEBA	04/02 ⇨ 03/07

FACET 4.7223 — 07

IGNITION CABLE SETS

Adatt./Suitable:

VW
06A 905 409 N

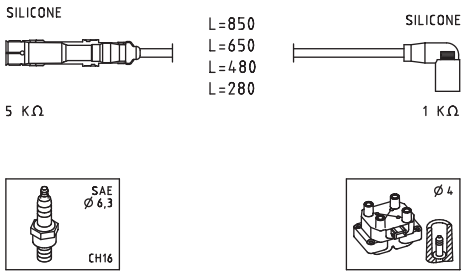

SKODA		
OCTAVIA I 2.0	AZJ	04/99 ⇨ 05/07
OCTAVIA I 2.0 4x4	AZJ	08/00 ⇨ 09/04
VOLKSWAGEN (BR)		
POLO 2.0	CFEA	01/09 ⇨
VW		
BORA 2.0	AZJ	10/98 ⇨ 12/13
BORA 2.0 4motion	AZJ	04/00 ⇨ 05/05
CADDY III 2.0 EcoFuel	BSX	04/06 ⇨ 05/15
GOLF IV 2.0	AZG, AZJ	07/98 ⇨ 06/06
GOLF IV 2.0 4motion	AZJ	10/00 ⇨ 06/06
GOLF IV 2.0 Bi-Fuel	BEH	02/02 ⇨ 06/06
JETTA VI 2.0	CKJA	06/10 ⇨ 12/17
NEW BEETLE 2.0	AZG, AZJ, BDC, BEJ, BER, BEV, BGD, BHP	01/98 ⇨ 10/10
TOURAN I 2.0 EcoFuel	BSX	02/06 ⇨ 05/09

FACET 4.7229 — 07

IGNITION CABLE SETS

Adatt./Suitable:

RENAULT
82 00 575 895

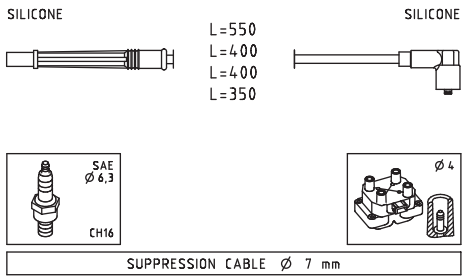

RENAULT		
CLIO III 1.2 16V	D4F784, D4F786	05/07 ⇨ 12/14
MODUS / GRAND MODUS 1.2	D4F786	04/11 ⇨
MODUS / GRAND MODUS 1.2 16V	D4F784	05/07 ⇨
TWINGO II 1.2 TCe 100	D4F780, D4F782	02/11 ⇨
TWINGO II 1.2 Turbo	D4F780, D4F782	03/07 ⇨ 09/14
WIND 1.2	D4F782	07/10 ⇨

FACET 4.7230 — 07

IGNITION CABLE SETS

Adatt./Suitable:

BOSCH
0 986 357 253
MAGNETI MARELLI
941318111315
NISSAN
22450-00Q0A
22450-00Q0C
22450-00QAA
RENAULT
82 00 486 877
82 00 805 133

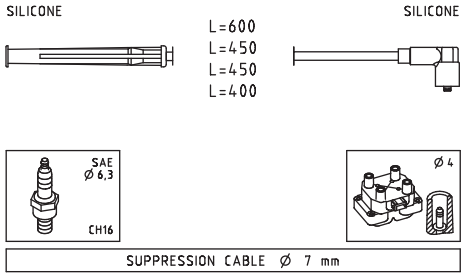

NISSAN		
KUBISTAR 1.2	D7F726, D7F744, D7F764	08/03 ⇨
RENAULT		
TWINGO II 1.2	D7F800	03/07 ⇨ 09/14

FACET 4.7231 — 07,5

IGNITION CABLE SETS

Adatt./Suitable:

SUZUKI
33700M70FA0
33700M70FA0-000
33710M70F30
33710M70F30-000

[00] **Eliminated on 22-02-2022. Please verify the availability through our local distributors**

- Eliminato il 22-02-2022. Verificare la disponibilità presso i nostri distributori
- Eliminé le 22-02-2022. Verifier la disponibilité auprès de nos distributeurs sur place
- Am 22-02-2022 gestrichen. Evtl. Verfügbarkeit bitte bei unseren Händlern prüfen
- Eliminado en fecha 22-02-2022. Verificar la disponibilidad a través de nuestros distribuidores locales

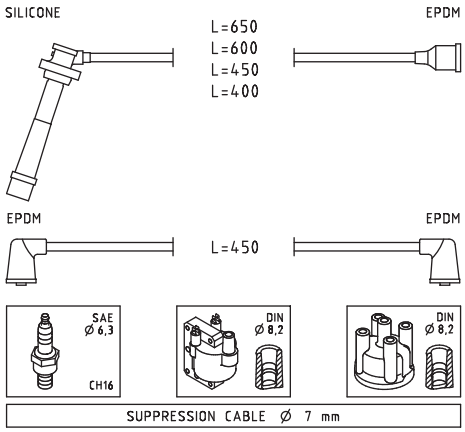

SUZUKI		
ALTO IV 1.0	G10BB	09/94 ⇨ 06/02
ALTO V 1.0	G10BB	01/00 ⇨ 06/02

FACET 4.7232 — 07

IGNITION CABLE SETS

Adatt./Suitable:

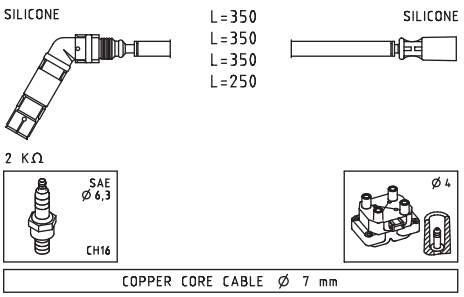

MERCEDES-BENZ		
CLASSE A II A 200 TURBO	M266.980	09/05 ⇨ 06/12
CLASSE B I B 200 TURBO	M266.980	03/05 ⇨ 11/11

FACET 4.7234 — 07

IGNITION CABLE SETS

Adatt./Suitable:

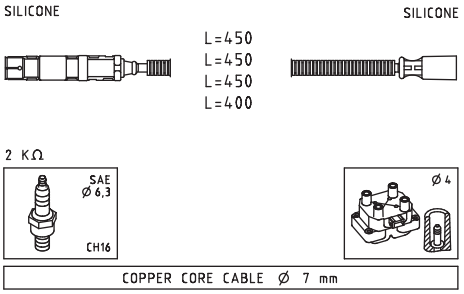

MERCEDES-BENZ		
CLASSE A II A 150	M266.920	09/04 ⇨ 06/12
CLASSE A II A 160	M266.920	04/09 ⇨ 06/12
CLASSE A II A 170	M266.940	09/04 ⇨ 06/12
CLASSE A II A 180	M266.940	04/09 ⇨ 06/12
CLASSE A II A 200	M266.960	09/04 ⇨ 06/12
CLASSE B I B 150	M266.920	03/05 ⇨ 11/11
CLASSE B I B 160	M266.920	04/09 ⇨ 11/11
CLASSE B I B 170	M266.940	03/05 ⇨ 11/11
CLASSE B I B 170 NGT	M266.960	04/08 ⇨ 11/11
CLASSE B I B 180	M266.940	04/09 ⇨ 11/11
CLASSE B I B 180 NGT	M266.960	04/08 ⇨ 11/11
CLASSE B I B 200	M266.960	03/05 ⇨ 11/11

FACET 4.7235 — 07

IGNITION CABLE SETS

Adatt./Suitable:

HYUNDAI
27501-02D00

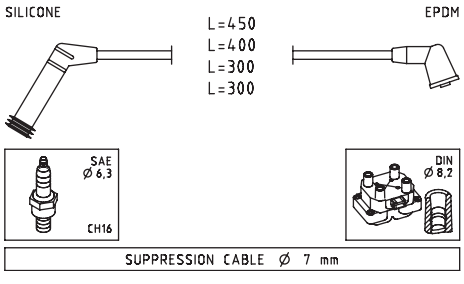

HYUNDAI		
ATOS 1.0 i	G4HC, G4HC-E	03/01 ⇨ 07/03
ATOS PRIME 1.0 i	G4HC, G4HC-E	03/01 ⇨
GETZ 1.1	G4HD	09/02 ⇨ 06/09
I10 I 1.1	G4HG	12/07 ⇨ 12/13
KIA		
PICANTO I 1.0	G4HE	09/07 ⇨ 04/11
PICANTO I 1.1	--	08/07 ⇨

FACET 4.7236 — 07,5

IGNITION CABLE SETS

Adatt./Suitable:

HYUNDAI
27501-37B00

[03] **Supplied until depletion**
- Fornibile fino ad esaurimento delle scorte
- Fourni jusqu'à épuisement du stock
- Lieferbar solange vorrat reicht
- Suministrado hasta el stock termina

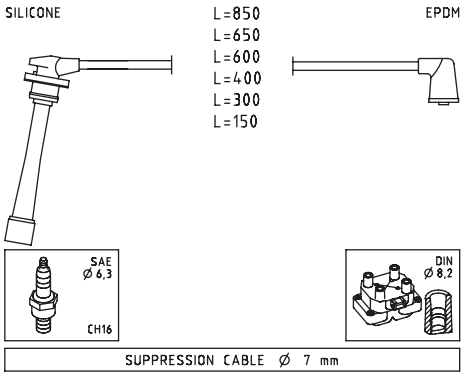

HYUNDAI		
SANTA FE I 2.7 V6 4x4	G6BA-G	02/01 ⇨ 03/06
COUPE II 2.7 V6	G6BA-G	01/01 ⇨ 08/09
TUCSON 2.7 Trazione integrale	G6BA-G	08/04 ⇨ 11/10
KIA		
SPORTAGE II 2.7 V6 4WD	G6BA	09/04 ⇨

FACET 4.7239 — 07,5

IGNITION CABLE SETS

Adatt./Suitable:

HITACHI
134114

KIA
0K30E-18140
0K30F-18140
27400-2X140

[03] **Supplied until depletion**
- Fornibile fino ad esaurimento delle scorte
- Fourni jusqu'à épuisement du stock
- Lieferbar solange vorrat reicht
- Suministrado hasta el stock termina

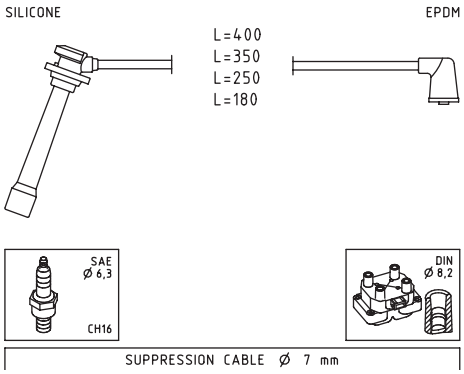

KIA		
RIO I 1.5 16V	A5D	08/00 ⇨ 02/05
RIO I 1.6 [CAN] [USA]	--	06/00 ⇨ 02/05
CARENS I 1.6	GA6D	07/02 ⇨
SHUMA I 1.6	GA6D	01/01 ⇨ 12/01
SHUMA II 1.6	GA6D	05/01 ⇨ 08/04
SPECTRA 1.6 i 16V	--	07/00 ⇨
SEPHIA 1.6 i 16V	--	07/00 ⇨

FACET 4.7241 — 07

IGNITION CABLE SETS

Adatt./Suitable:

BOSCH
0 986 356 991

HITACHI
134376

HYUNDAI
27501-38B00

KIA
27501-38B00

[03] **Supplied until depletion**
- Fornibile fino ad esaurimento delle scorte
- Fourni jusqu'à épuisement du stock
- Lieferbar solange vorrat reicht
- Suministrado hasta el stock termina

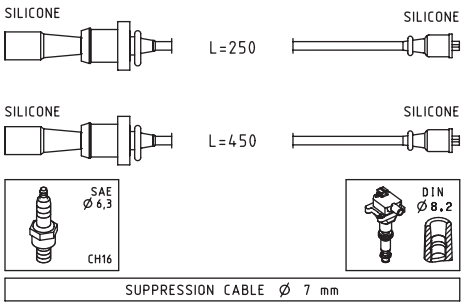

HYUNDAI		
H-1 I 2.4	G4JS	11/01 ⇨ 04/04
HIGHWAY VAN 2.0 16V	G4JP	03/00 ⇨ 03/04
SANTA FE I 2.0	G4BP	08/01 ⇨ 03/06
SANTA FE I 2.4 16V	G4JS-G	02/01 ⇨ 03/06
SANTA FE I 2.4 16V 4x4	G4JS-G	02/01 ⇨ 03/06
SONATA IV 2.0 16V	G4JP-EG, G4JP-G	10/01 ⇨ 11/04
SONATA IV 2.4 16V	G4BS	03/98 ⇨ 10/01
SONATA V 2.0 [RUS]	--	01/05 ⇨ 04/06
TRAJET 2.0	G4GC, G4GC-G, G4JP-G	03/00 ⇨ 07/08
TRAJET 2.0 CRDi	D4EA	08/05 ⇨ 07/08
KIA		
MAGENTIS I 2.0	G4JP	05/01 ⇨ 09/05
MAGENTIS I 2.4 [USA]	--	01/01 ⇨ 12/04

FACET 4.7242 — 07

IGNITION CABLE SETS

Adatt./Suitable:

VOLVO
30731424

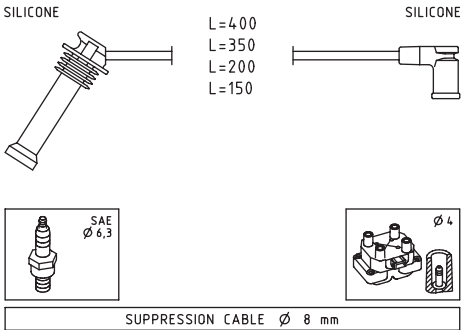

FORD		
B-MAX 1.4	SPJD	10/12 ⇨
B-MAX 1.4 LPG	RTJC	08/13 ⇨
B-MAX 1.6 Ti	IQJA	10/12 ⇨
C-MAX I 1.6	HWDA, HWDB, SHDA, SHDB, SHDC	02/07 ⇨ 09/10
C-MAX I 1.6 Ti-VCT	--	03/07 ⇨
C-MAX II 1.6	--	12/10 ⇨
C-MAX II 1.6 Ti	IQDA, IQDB, PNDA, XTDA	12/10 ⇨ 06/19
FIESTA V 1.25 16V	FUJA, FUJB, M7JA, M7JB	05/02 ⇨ 06/08
FIESTA V 1.4 16V	FXJA, FXJB	11/01 ⇨ 06/08
FIESTA V 1.6 16V	FYJA, FYJB	11/01 ⇨ 06/08
FIESTA VI 1.25	SNJA, SNJB, SNJC, SNJD, STJA, STJB	06/08 ⇨
FIESTA VI 1.4	--, 8MA1.77, SPJC	06/08 ⇨
FIESTA VI 1.4 LPG	RTJA, RTJB	01/09 ⇨ 04/17
FIESTA VI 1.6 Ti	--, 68GR-FKS, HXJB, IQJA, U5JA	06/08 ⇨
FOCUS II 1.4	ASDA, ASDB	07/04 ⇨ 09/12
FOCUS II 1.6	HWDA, HWDB, SHDA, SHDB, SHDC	07/04 ⇨ 09/12
FOCUS II 1.6 Ti	HXDA, HXDB	07/04 ⇨ 09/12
FOCUS II 1.6 Ti-VCT	--	12/07 ⇨
FOCUS III 1.6 Flexifuel	MUDA	07/10 ⇨
FOCUS III 1.6 LPG	MUDA	02/12 ⇨
FOCUS III 1.6 Ti	IQDB, MUDA, PNDA, XTDA	07/10 ⇨
FOCUS III 1.6 Ti-VCT	--	07/10 ⇨
FOCUS C-MAX 1.6	HWDA, HWDB	10/03 ⇨ 03/07
FOCUS C-MAX 1.6 Ti	HXDA, SIDA	08/04 ⇨ 03/07
FUSION 1.25	--, FUJA, FUJB	10/02 ⇨
FUSION 1.4	--, FXJA, FXJB, FXJC	08/02 ⇨
FUSION 1.4 LPG	UTJA	01/10 ⇨ 12/12
FUSION 1.6	FYJA, FYJB, FYJC	08/02 ⇨ 11/09
GRAND C-MAX 1.6 Ti	IQDA, IQDB, PNDA	12/10 ⇨ 06/19
KA+ 1.2	B2KA	06/16 ⇨
KA+ 1.2 Ti-VCT	YSKD, YSKE	06/16 ⇨
MONDEO III 1.6 Ti	KGBA, PNBA, RHBA	03/07 ⇨ 01/15
MAZDA		
2 I 1.2	FUJA	02/03 ⇨ 06/07
2 I 1.25	FUJA	04/03 ⇨ 06/07
2 I 1.3 L	ZJ-04	04/03 ⇨ 06/07
2 I 1.4	FXJA	02/03 ⇨ 06/07
2 I 1.5	ZY-VE	04/03 ⇨ 06/07
2 I 1.6	FYJA	02/03 ⇨ 06/07
VOLVO		
C30 1.6	B4164S3	10/06 ⇨ 12/12
S40 II 1.6	B4164S3	01/05 ⇨ 12/12
V50 1.6	B4164S3	01/05 ⇨ 12/12

FACET 4.7244 — 07

IGNITION CABLE SETS

Adatt./Suitable:

BOSCH
0 986 MG0 980

DACIA
77 00 273 826
82 00 506 297

MAGNETI MARELLI
941318111002

NISSAN
22450-00Q0B
22450-00QAB

RENAULT
77 00 273 826
82 00 506 297

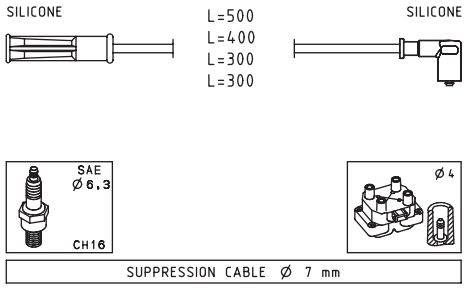

DACIA		
LOGAN I 1.4	K7J710	09/04 ⇨
LOGAN I 1.6	K7M710	09/04 ⇨
LOGAN I 1.6 Bifuel	K7M710	11/08 ⇨
SANDERO I 1.4	K7J710	06/08 ⇨
NISSAN		
KUBISTAR 1.4	K7J700	08/03 ⇨ 10/09
RENAULT		
CLIO II 1.4	E7J634, E7J635, K7J700	09/98 ⇨
CLIO II 1.6	K7M746	10/99 ⇨
KANGOO I 1.4	E7J634, E7J635, K7J700, K7J701	08/97 ⇨
KANGOO I 1.6	K7M746	09/99 ⇨
LOGAN 1.4	K7J710	09/04 ⇨
LOGAN 1.6	K7M710	09/04 ⇨
MEGANE I 1.4	E7J626	09/96 ⇨ 08/03
MEGANE I 1.4 e	E7J626	01/96 ⇨ 08/03
MEGANE I 1.6	K7M704	02/00 ⇨ 09/00
MEGANE I 1.6 e	K7M702, K7M703	01/96 ⇨ 08/03
MEGANE I 1.6 i	K7M720	01/96 ⇨ 03/99
MEGANE SCÉNIC I 1.6 e	K7M702, K7M703	10/96 ⇨ 10/99
MEGANE SCÉNIC I 1.6 i	K7M720	01/97 ⇨ 09/99
SANDERO I 1.4	K7J710	02/09 ⇨
SANDERO I 1.6	K7M710	02/09 ⇨

FACET 4.7245 — 07

IGNITION CABLE SETS

Adatt./Suitable:

HITACHI
134955

MAGNETI MARELLI
941318111320

MAZDA
L813-18-140B
L813-18-140C

[03] **Supplied until depletion**
- Fornibile fino ad esaurimento delle scorte
- Fourni jusqu'à épuisement du stock
- Lieferbar solange vorrat reicht
- Suministrado hasta el stock termina

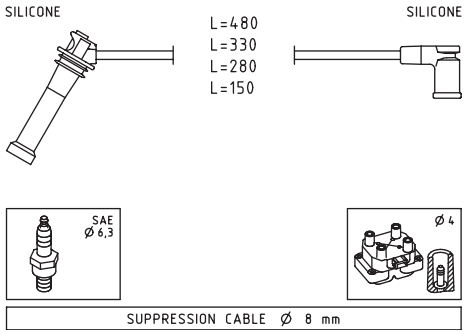

MAZDA		
6 I 1.8	L813, L823, L828	08/02 ⇨ 08/07
6 I 2.0	LF17, LF18	06/02 ⇨ 08/07
6 I 2.3	L3C1	01/02 ⇨ 02/08
6 I 2.3 AWD	L3C1	11/02 ⇨ 08/07
MAZDA		
MPV II 2.3	L3	07/02 ⇨ 02/06

FACET 4.7246 — 07

IGNITION CABLE SETS

Adatt./Suitable:

BOSCH
F 000 99C 602

DACIA
82 00 713 680

NISSAN
24488-00QAA

RENAULT
82 00 713 680

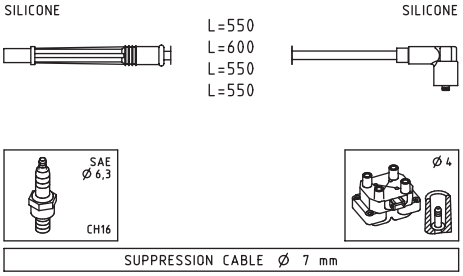

DACIA		
LOGAN I 1.0	D4D760	12/05 ⇨
LOGAN I 1.2 16V	D4F732	02/06 ⇨
SANDERO I 1.2 16V	D4F732	11/08 ⇨
SANDERO I 1.2 16V LPG	D4F732	11/08 ⇨
NISSAN		
KUBISTAR 1.2 16V	D4F712, D4F730	04/06 ⇨
RENAULT		
CLIO II 1.2 16V	D4F722, D4F728	06/01 ⇨ 08/16
CLIO III 1.2	D4F764	10/05 ⇨ 12/12
CLIO III 1.2 16V	D4F740, D4F744, D4F764	06/05 ⇨
CLIO III 1.2 16V Hi-Flex	D4F740, D4F742	07/08 ⇨ 12/14
CLIO IV 1.2 16V	D4F744	11/12 ⇨
LOGAN 1.0	D4D760	12/05 ⇨
LOGAN 1.2 16V	D4F732	02/06 ⇨
MODUS / GRAND MODUS 1.2	D4F740, D4F742, D4F764	12/04 ⇨
MODUS / GRAND MODUS 1.2 16V Hi-Flex	D4F740	10/08 ⇨
SANDERO I 1.2 16V	D4F732	11/08 ⇨
THALIA I 1.2i 16V	D4F728	04/04 ⇨
TWINGO I 1.2 16V	D4F708	08/04 ⇨ 06/07
TWINGO II 1.2 16V	D4F764, D4F770, D4F772	03/07 ⇨

FACET 4.7247 — 07

IGNITION CABLE SETS

Adatt./Suitable:

[03] **Supplied until depletion**
- Fornibile fino ad esaurimento delle scorte
- Fourni jusqu'à épuisement du stock
- Lieferbar solange vorrat reicht
- Suministrado hasta el stock termina

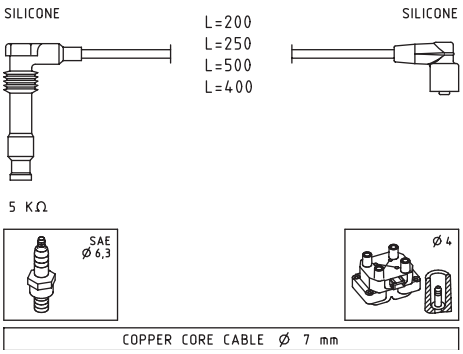

CHEVROLET		
CAPTIVA 2.4	Z24SED	06/06 ⇨
CAPTIVA 2.4 4WD	Z24SED	06/06 ⇨ 02/11
CAPTIVA 2.4 LPG	Z24SED	01/07 ⇨
CAPTIVA 2.4 LPG 4WD	Z24SED	01/07 ⇨ 02/11

FACET 4.7248 — 07

IGNITION CABLE SETS

Adatt./Suitable:

SKODA
03F 905 409 A
03F 905 409 B
03F 905 409 C

VW
03F 905 409 B

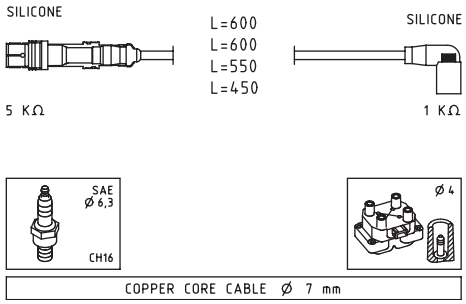

AUDI		
A1 1.2 TFSI	CBZA	05/10 ⇨ 04/15
A3 II 1.2 TFSI	CBZB	03/10 ⇨ 05/13
A3 II 1.2 TSI	CBZB	04/10 ⇨ 03/13
SEAT		
ALTEA 1.2 TSI	CBZB	04/10 ⇨
ALTEA XL 1.2 TSI	CBZB	04/10 ⇨
IBIZA IV 1.2 TSI	CBZA, CBZB	09/10 ⇨ 05/15
LEON II 1.2 TSI	CBZB	02/10 ⇨ 12/12
TOLEDO IV 1.2 TSI	CBZA, CBZB	07/12 ⇨ 06/15
SKODA		
OCTAVIA II 1.2 TSI	CBZB	02/10 ⇨ 06/13
FABIA II 1.2 TSI	CBZA, CBZB	03/10 ⇨ 12/14
YETI 1.2 TSI	CBZB	09/09 ⇨ 05/15
VW		
GOLF VI 1.2 TSi	CBZA, CBZB	11/08 ⇨
BEETLE 1.2 TSI	CBZB	07/11 ⇨ 07/19
CADDY III 1.2 TSI	CBZA, CBZB	09/10 ⇨ 05/15
JETTA VI 1.2 TSI	CBZB	10/10 ⇨ 12/17
POLO V 1.2 TSI	CBZB, CBZC	11/09 ⇨
TOURAN I 1.2 TSI	CBZB	05/10 ⇨ 05/15

FACET 4.7249 — 07

IGNITION CABLE SETS

Adatt./Suitable:

CHEVROLET
25183557
96651945
96984145

GENERAL MOTORS
25 183 557
96 984 145

HITACHI
134375

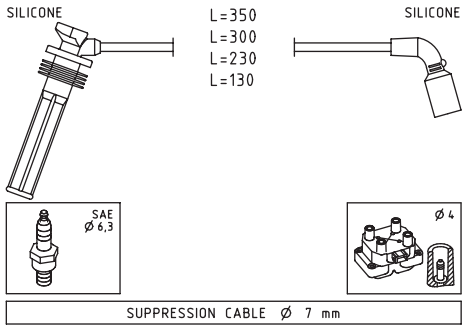

CHEVROLET		
AVEO I 1.2	B12D1, LMU	01/08 ⇨
AVEO I 1.2 LPG	B12D1, LMU	04/08 ⇨
AVEO I 1.5	LX6	05/05 ⇨
SPARK III 1.0	B10D1	03/10 ⇨
SPARK III 1.0 LPG	B10D1, LMT	03/10 ⇨
SPARK III 1.2	B12D1, LMU, Z12XE	03/10 ⇨
SPARK III 1.2 LPG	B12D1, LMU	03/10 ⇨

FACET 4.7251 — 05

IGNITION CABLE SETS

Adatt./Suitable:

HITACHI
134377

MITSUBISHI
MD343245

[03] **Supplied until depletion**
- Fornibile fino ad esaurimento delle scorte
- Fourni jusqu'à épuisement du stock
- Lieferbar solange vorrat reicht
- Suministrado hasta el stock termina

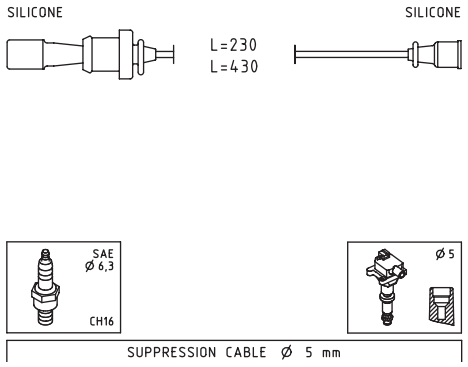

MITSUBISHI		
LANCER VII 2.0 16V EVO IV	4G63Turbo	08/96 ⇨ 06/97
LANCER VII EVO V	4G63Turbo	01/98 ⇨ 12/98
LANCER VII EVO VI	4G63Turbo	01/99 ⇨ 02/01
LANCER VIII 2.0	4G63(DOHC16V), 4G63-7	09/03 ⇨
OUTLANDER I 2.0	4G63(DOHC16V)	05/03 ⇨ 10/06
OUTLANDER I 2.0 4WD	4G63(DOHC16V)	05/03 ⇨ 10/06
OUTLANDER I 2.0 Turbo 4WD	4G63-T(DOHC16V)	04/04 ⇨ 10/06
OUTLANDER I 2.0 Turbo-R 4WD	4G63Turbo	01/02 ⇨ 10/06

FACET 4.7252 — 05

IGNITION CABLE SETS

Adatt./Suitable:

BOSCH
0 986 357 256

DACIA
22 44 042 52R
82 00 943 801

RENAULT
82 00 943 801

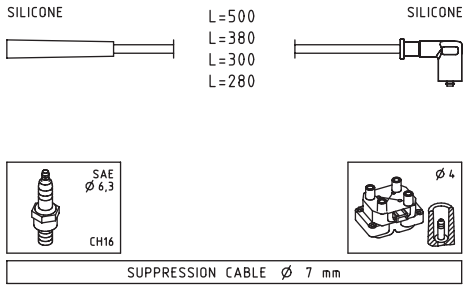

DACIA		
DOKKER 1.6	K7M812, K7M828	11/12 ⇨
DOKKER 1.6 LPG	K7M812, K7M828	11/13 ⇨
LODGY 1.6	K7M812, K7M828	03/12 ⇨
LODGY 1.6 LPG	K7M812, K7M828	11/13 ⇨
LOGAN I 1.4	K7J710	09/04 ⇨
LOGAN I 1.4 MPI LPG	K7J710	02/06 ⇨ 12/12
LOGAN I 1.6	K7M710, K7M714	09/04 ⇨
LOGAN I 1.6 Bifuel	K7M710	11/08 ⇨
LOGAN I 1.6 MPI 85	K7M800	05/10 ⇨
LOGAN II 1.6 16V	K7M764, K7M812	10/12 ⇨
SANDERO I 1.4	K7J710	06/08 ⇨
SANDERO I 1.6	K7M710, K7M718	06/08 ⇨
SANDERO I 1.6 MPI 85	K7M800	05/10 ⇨ 06/13
SANDERO II 1.6	K7M812	11/12 ⇨
SANDERO II 1.6 I	K7M764	10/12 ⇨

RENAULT		
KANGOO II 1.6	K7M750	02/08 ⇨
LOGAN 1.4	K7J710	09/04 ⇨
LOGAN 1.6	K7M710	09/04 ⇨
LOGAN 1.6 MPI 85	K7M800	05/10 ⇨
SANDERO I 1.4	K7J710	02/09 ⇨

RENAULT		
SANDERO I 1.6	K7M710	12/07 ⇨
SANDERO I 1.6 MPI 85	K7M800	05/10 ⇨
THALIA I 1.4	K7J700	05/00 ⇨
THALIA I 1.6	K7M730, K7M734	01/01 ⇨
THALIA II 1.4	K7J700	09/08 ⇨ 06/14

FACET 4.7255 — 07

IGNITION CABLE SETS

Adatt./Suitable:

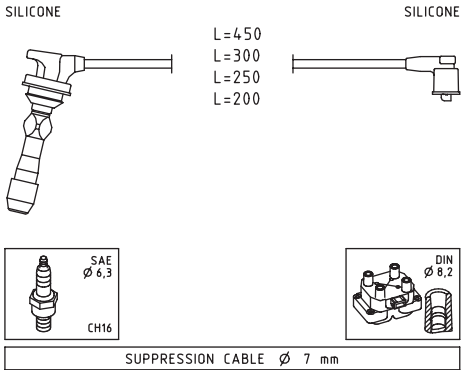

HYUNDAI		
I20 II 1.2	G4LA	11/14 ⇨
I10 I 1.2	G4LA	11/08 ⇨ 12/13
I10 II 1.2	G4LA	12/13 ⇨
I20 I 1.2	G4LA	09/08 ⇨ 12/15

FACET 4.8347 — 05

IGNITION CABLE SETS

Adatt./Suitable:

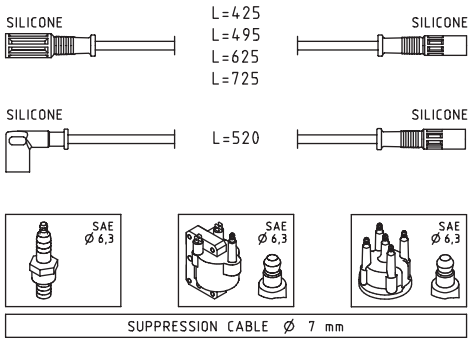

FIAT		
FIORINO II 1.0 iE	156A2.246	11/92 ⇨ 04/96
PALIO 1.1	178B9.033	07/97 ⇨ 10/03
PANDA I 1.1	156C.046	05/91 ⇨ 03/95
PANDA I 1000	156A2.000, 156A2.100, 156A3.000	01/85 ⇨
PANDA I 1000 4x4	156A2.100, 156A2.246, 156A3.000	01/86 ⇨ 12/94
PANDA I 1000 CLX	156A2.000	05/91 ⇨ 12/94
PANDA I 1000 Fire	156A2.000	05/86 ⇨ 04/91
PANDA I 1000 Fire [CHE]	156A2.146	11/87 ⇨ 04/91
PANDA I 1000 Fire [DEU]	156A2.048	01/86 ⇨ 07/89
PANDA I 1000 i.e	156A2.246	08/92 ⇨ 02/04
PANDA I 1000 i.e. Cat	156A2.246	10/87 ⇨ 08/98
PANDA I 1100 Trekking 4x4	156C.046	10/91 ⇨ 07/04
PANDA I 750	156A4.000	01/86 ⇨ 10/03
PANDA I 750 Cat	156A4.048	01/95 ⇨ 10/03
PANDA I 750 Fire	156A4.048	11/88 ⇨ 04/91
TIPO I 1.1	160A3.000	01/88 ⇨ 10/91
UNO 45 1.0	156A2.000, 156A2.100	06/86 ⇨ 12/93
UNO 45 1.0 Fire	--	01/83 ⇨ 12/89
UNO 45 i.e. 1.0	156A2.246	10/84 ⇨ 10/95
UNO 50 1.1	156C.046	01/90 ⇨ 12/93

FIAT		
UNO 50 i.e. 1.1	146C3.000	06/92 ⇨ 12/93
UNO 60 1.1	160A3.000	04/89 ⇨ 12/92
UNO Mondo 1.0	146A2.166	01/98 ⇨
UNO Mondo 1.0 [IND]	146A2.166	01/98 ⇨

LANCIA		
Y10 1.0 Fire	156A2.100	06/85 ⇨ 06/91
Y10 1.0 Fire Catalytic-Conv	156A2.246	10/87 ⇨ 02/92
Y10 1.0 Fire Trazione integrale	156A2.000, 156A2.100	12/86 ⇨ 02/90
Y10 1.1 i.e Fire	156C.000	08/89 ⇨ 06/92
Y10 1.1 i.e. Fire	156C.046	07/89 ⇨ 09/95

FACET 4.8351 — 05

IGNITION CABLE SETS

Adatt./Suitable:

FIAT
7619338

[03] **Supplied until depletion**
- Fornibile fino ad esaurimento delle scorte
- Fourni jusqu'à épuisement du stock
- Lieferbar solange vorrat reicht
- Suministrado hasta el stock termina

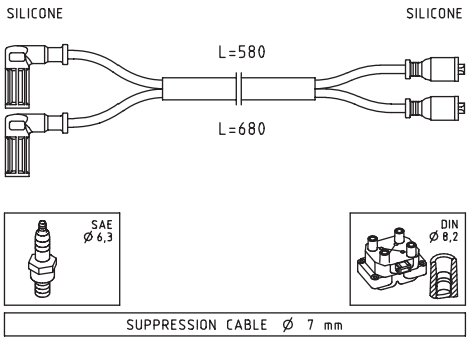

FIAT		
126 700	126A2.000, 126A2.048	09/87 ⇨ 06/96

FACET 4.8354 — 07

IGNITION CABLE SETS

Adatt./Suitable:

[03] **Supplied until depletion**
- Fornibile fino ad esaurimento delle scorte
- Fourni jusqu'à épuisement du stock
- Lieferbar solange vorrat reicht
- Suministrado hasta el stock termina

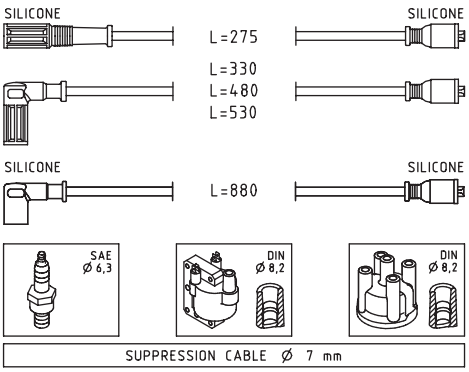

FIAT		
REGATA 1.1 60 , 60 L	138B.000	10/83 ⇨ 08/86
REGATA 70 1.3	138B2.000, 149A3.000	09/83 ⇨ 07/89
TEMPRA 1.4 i.e.	159A2.000	04/90 ⇨ 08/96
TIPO I 1.4	160A1.000	07/87 ⇨ 12/89
TIPO I 1.4 i.e.	159A2.000	05/89 ⇨ 04/95
UNO 55 1.1	138B.000	01/83 ⇨ 08/89
UNO 60 1.1	146A4.048	02/88 ⇨ 02/92
UNO 60 1.1 SX	--	01/83 ⇨ 12/85
UNO 70 1.3	138B2.000	01/83 ⇨ 04/85

LANCIA		
DELTA I 1.1	831B8.000	01/86 ⇨ 12/90
DELTA I 1.3	1831B.000, 3831B.000, 831A2.000, 831B.000	09/79 ⇨ 10/92
DELTA I 1.5	831A1.000, 831B1.000	09/79 ⇨ 12/92

LANCIA		
PRISMA 1.3	831A2.000	01/83 ⇨ 12/89

FACET 4.8372 — 07,5

IGNITION CABLE SETS

Adatt./Suitable:

[03] **Supplied until depletion**
- Fornibile fino ad esaurimento delle scorte
- Fourni jusqu'à épuisement du stock
- Lieferbar solange vorrat reicht
- Suministrado hasta el stock termina

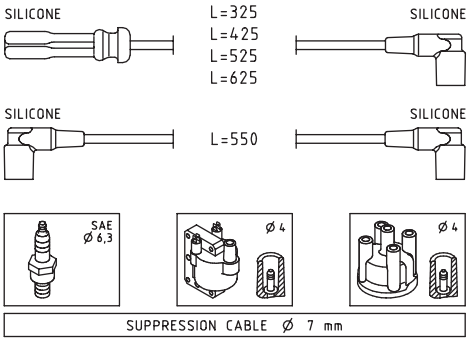

VOLVO		
960 I 2.3	B230GT	08/90 ⇨ 07/94
960 I 2.3 Turbo	B230FT	09/90 ⇨ 08/93
740 2.0	B200E, B200ET, B200G	01/85 ⇨ 07/92
740 2.0 Turbo	B200ET, B200FT	09/87 ⇨ 08/91
740 2.3	B230E, B230F, B230FB, B230G, B230K	08/84 ⇨ 12/92
740 2.3 GL	B230E	08/84 ⇨ 08/87
740 2.3 Turbo	B230ET, B230FT, B230GT	08/85 ⇨ 08/91
760 2.3	B230ET, B230FT, B230K	08/84 ⇨ 07/92
760 2.3 Turbo	B230ET, B230FT, B230GT	08/84 ⇨ 08/90
940 I 2.0	B200E, B200F, B200G	08/90 ⇨ 07/94
940 I 2.0 Turbo	B200FT	08/90 ⇨ 07/95
940 I 2.3	B230E, B230F, B230FB, B230FD, B230G	08/90 ⇨ 07/95
940 I 2.3 Turbo	B230FT	08/90 ⇨ 07/94
940 II 2.0 GLT	B200GT	10/94 ⇨ 05/97
940 II 2.0 Turbo	B200FT	04/96 ⇨ 10/98
940 II 2.3	B230FD, B230GK	08/94 ⇨ 05/97
940 II 2.3 ti	B230FK	01/95 ⇨ 10/98
940 II 2.3 Turbo	B230FT, B230GK	08/94 ⇨ 12/98

FACET 4.8386 — 07

IGNITION CABLE SETS

Adatt./Suitable:

[03] **Supplied until depletion**
- Fornibile fino ad esaurimento delle scorte
- Fourni jusqu'à épuisement du stock
- Lieferbar solange vorrat reicht
- Suministrado hasta el stock termina

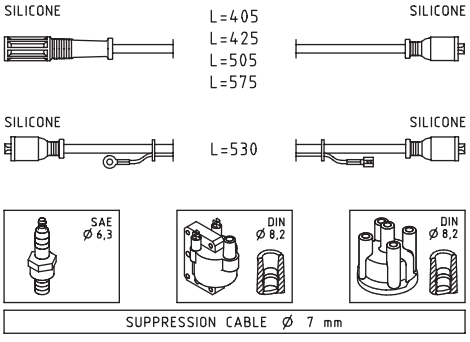

FIAT		
PANDA I 800	100GL6.000	02/81 ⇨ 12/85
PANDA I 950	A112B1.054	09/82 ⇨ 08/83
UNO 45 0.9 Trend	146A.048	09/89 ⇨ 09/92
PEUGEOT		
309 II 1.4	TU3F2	07/91 ⇨ 12/93

FACET 4.8398 — 05

IGNITION CABLE SETS

Adatt./Suitable:

[03] **Supplied until depletion**
- Fornibile fino ad esaurimento delle scorte
- Fourni jusqu'à épuisement du stock
- Lieferbar solange vorrat reicht
- Suministrado hasta el stock termina

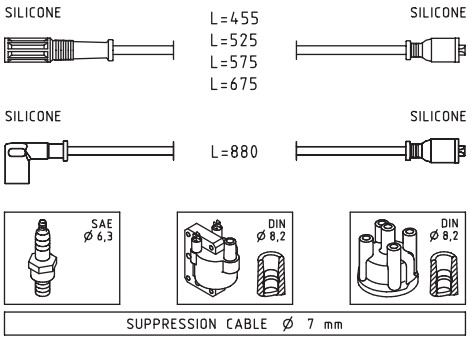

FIAT		
CROMA I 2000 CHT	154A1.000, 154C5.000	01/91 ⇨ 09/92
CROMA I 2000 i.e.	154C3.000, 154C3.046, 834B.048, 834B.146	03/86 ⇨ 12/96
CROMA I 2000 i.e. Turbo	154A2.000, 154C4.000, 154C4.046, 834C.146	12/85 ⇨ 08/96
TEMPRA 1.8 4x4	159A4.000	07/92 ⇨ 06/93
TEMPRA 1.8 i.e.	159A4.000, 159A4.046	03/90 ⇨ 08/96
LANCIA		
DELTA I 1.6 GT i.e.	831B7.000	08/86 ⇨ 08/88
PRISMA 1.6	831B6.000	08/86 ⇨ 02/92
THEMA 2000 i.e	834B1.000	09/88 ⇨ 05/92
THEMA 2000 i.e.	834B.146	09/87 ⇨ 05/92
THEMA 2000 i.e.Turbo	834C.146	07/86 ⇨ 05/90
THEMA 2000 Turbo	834C.146	12/88 ⇨ 03/92

FACET 4.8415 — 07

IGNITION CABLE SETS

Adatt./Suitable:

[00] **Eliminated on 22-02-2021. Please verify the availability through our local distributors**
- Eliminato il 22-02-2021. Verificare la disponibilità presso i nostri distributori
- Eliminé le 22-02-2021. Verifier la disponibilité auprès de nos distributeurs sur place
- Am 22-02-2021 gestrichen. Evtl. Verfügbarkeit bitte bei unseren Händlern prüfen
- Eliminado en fecha 22-02-2021. Verificar la disponibilidad a través de nuestros distribuidores locales

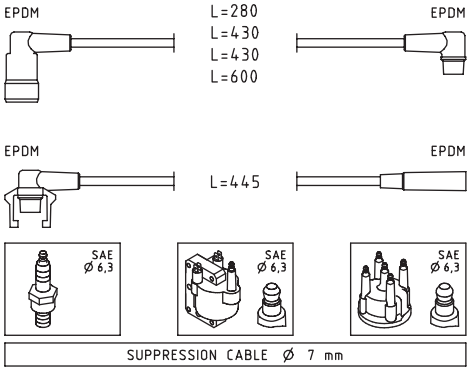

RENAULT		
19 I 1.7	F3N746	08/88 ⇨ 12/92
19 II 1.7	F3N743, F3N746	04/92 ⇨ 12/95
CLIO I 1.7	F2N770	01/91 ⇨ 12/93
VOLVO		
440 1.6	B16F	09/88 ⇨ 12/96
440 1.7	B18E, B18EP, B18F, B18FP, B18K, B18KD, B18KP, B18KPD	08/88 ⇨ 12/96

VOLVO		
440 1.8	B18U	08/91 ⇨ 12/96
440 2.0	B20F	08/92 ⇨ 07/96
460 1.6	B16F	07/92 ⇨ 07/96
460 1.7	B18EP, B18FP, B18K, B18KD, B18KP	09/88 ⇨ 07/96
460 1.8	B18U	08/91 ⇨ 07/96
460 2.0	B20F	08/92 ⇨ 07/96
480 1.7	B18E, B18ED, B18EP, B18F, B18FP	04/86 ⇨ 07/96
480 2.0	B20F	08/92 ⇨ 09/95

FACET 4.8417 — 07

IGNITION CABLE SETS

Adatt./Suitable:

[00] **Eliminated on 14-04-2020. Please verify the availability through our local distributors**
- Eliminato il 14-04-2020. Verificare la disponibilità presso i nostri distributori
- Eliminé le 14-04-2020. Verifier la disponibilité auprès de nos distributeurs sur place
- Am 14-04-2020 gestrichen. Evtl. Verfügbarkeit bitte bei unseren Händlern prüfen
- Eliminado en fecha 14-04-2020. Verificar la disponibilidad a través de nuestros distribuidores locales

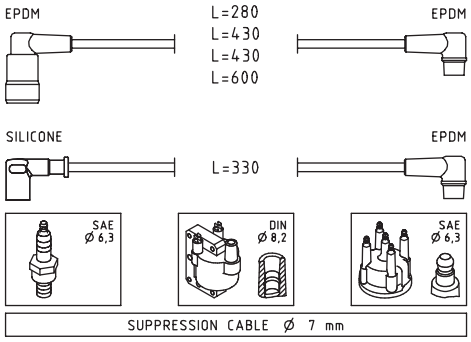

VOLVO		
440 1.7 Turbo	B18FT	08/88 ⇨ 12/96
460 1.7 Turbo	B18FT	08/89 ⇨ 07/96
480 1.7 Turbo	B18FT	08/87 ⇨ 07/96

FACET 4.8429 — 07

IGNITION CABLE SETS

Adatt./Suitable:

FIAT
4261590

[00] **Eliminated on 18-11-2019. Please verify the availability through our local distributors**
- Eliminato il 18-11-2019. Verificare la disponibilità presso i nostri distributori
- Eliminé le 18-11-2019. Verifier la disponibilité auprès de nos distributeurs sur place
- Am 18-11-2019 gestrichen. Evtl. Verfügbarkeit bitte bei unseren Händlern prüfen
- Eliminado en fecha 18-11-2019. Verificar la disponibilidad a través de nuestros distribuidores locales

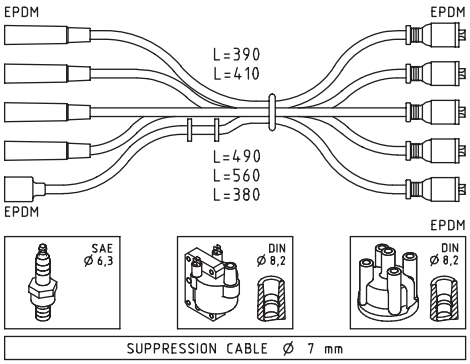

FIAT		
127 0.9	100GL.000, 100GL.048	06/71 ⇨ 12/84

FACET 4.8432 — 07

IGNITION CABLE SETS

Adatt./Suitable:

FIAT
7540530
MAGNETI MARELLI
941094040575

[03] **Supplied until depletion**
- Fornibile fino ad esaurimento delle scorte
- Fourni jusqu'à épuisement du stock
- Lieferbar solange vorrat reicht
- Suministrado hasta el stock termina

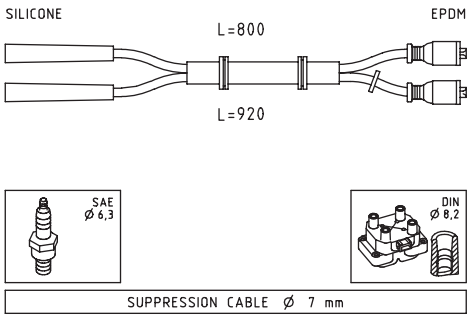

FIAT		
126 650	126A1.048	07/77 ⇨ 09/87

FACET 4.8456 — 07

IGNITION CABLE SETS

Adatt./Suitable:

BOSCH
0 986 356 709
FIAT
7625943
7742689
LANCIA
7625943
7742689

[00] **Eliminated on 19-01-2021. Please verify the availability through our local distributors**
- Eliminato il 19-01-2021. Verificare la disponibilità presso i nostri distributori
- Eliminé le 19-01-2021. Verifier la disponibilité auprès de nos distributeurs sur place
- Am 19-01-2021 gestrichen. Evtl. Verfügbarkeit bitte bei unseren Händlern prüfen
- Eliminado en fecha 19-01-2021. Verificar la disponibilidad a través de nuestros distribuidores locales

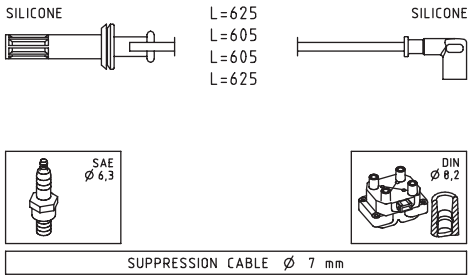

FIAT		
COUPE 2.0 16V Turbo	175A1.000	11/93 ⇨ 08/96
LANCIA		
DELTA II 2.0 16V Turbo	175A4.000, 836A2.000	06/93 ⇨ 08/99
THEMA 2000 16V Turbo	834C1.000	12/88 ⇨ 06/90
THEMA 2000 i.e. 16V	834B2.000, 834B2.246	05/88 ⇨ 08/92
THEMA 2000 i.e. 16V Turbo	834C1.000, 834C1.246	12/88 ⇨ 03/93

FACET 4.8466 — 07

IGNITION CABLE SETS

Adatt./Suitable:

[03] **Supplied until depletion**
- Fornibile fino ad esaurimento delle scorte
- Fourni jusqu'à épuisement du stock
- Lieferbar solange vorrat reicht
- Suministrado hasta el stock termina

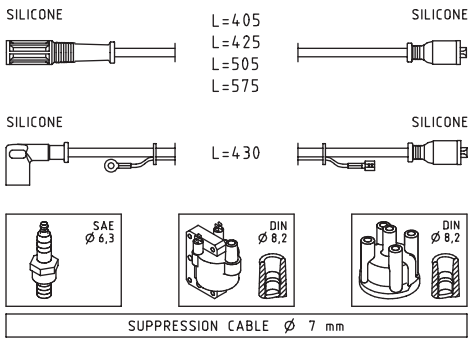

FIAT		
PANDA I 750	141B.000	01/86 ⇨ 01/95
PANDA I 900	100GL3.000	10/80 ⇨ 06/94
PANDA I 900 CL	146A.048	01/86 ⇨ 12/92

FACET 4.8471 — 07

IGNITION CABLE SETS

Adatt./Suitable:

[03] **Supplied until depletion**
- Fornibile fino ad esaurimento delle scorte
- Fourni jusqu'à épuisement du stock
- Lieferbar solange vorrat reicht
- Suministrado hasta el stock termina

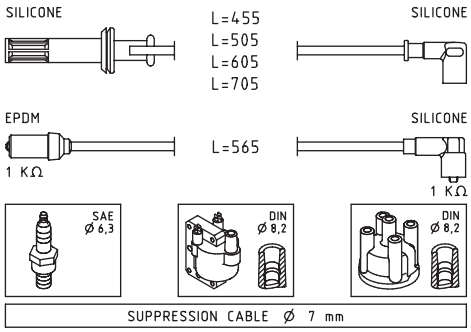

LANCIA		
DELTA I 2.0 16V HF Evo Integrale	831E5.000	06/93 ⇨ 01/94
DELTA I 2.0 16V HF Integrale	831D5.000	03/89 ⇨ 09/91
DELTA I 2.0 HF Integrale	831C5.046	12/86 ⇨ 12/92

FACET 4.8491 — 08

IGNITION CABLE SETS

Adatt./Suitable:

BOSCH
0 986 356 820
CITROËN
5967 K9
96 070 995
MAGNETI MARELLI
941318111091
PEUGEOT
5967 K9

[00] **Eliminated on 06-09-2021. Please verify the availability through our local distributors**
- Eliminato il 06-09-2021. Verificare la disponibilità presso i nostri distributori
- Eliminé le 06-09-2021. Verifier la disponibilité auprès de nos distributeurs sur place
- Am 06-09-2021 gestrichen. Evtl. Verfügbarkeit bitte bei unseren Händlern prüfen
- Eliminado en fecha 06-09-2021. Verificar la disponibilidad a través de nuestros distribuidores locales

[03] **Supplied until depletion**
- Fornibile fino ad esaurimento delle scorte
- Fourni jusqu'à épuisement du stock
- Lieferbar solange vorrat reicht
- Suministrado hasta el stock termina

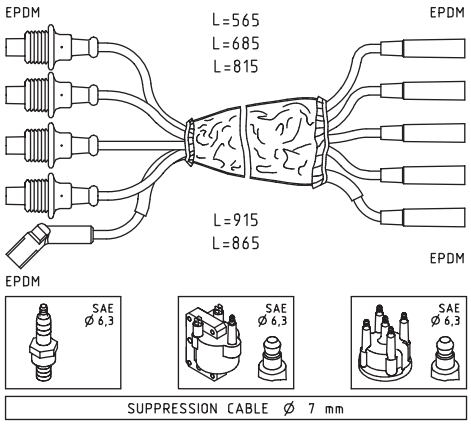

CITROËN		
BX 1.6	182A, B6D, B6E	01/87 ⇨ 12/94
BX 16	180Z	03/86 ⇨ 12/94
ZX 1.9	D6E(XU9JA)	03/91 ⇨ 06/97
ZX 1.9 i	DKZ(XU9JA), XU9JA	03/91 ⇨ 06/97
PEUGEOT		
205 I 1.6 GTI	B6D(XU5JA)	02/83 ⇨ 07/87
205 II 1.6 GTI	XU5JA	01/91 ⇨ 12/94

PEUGEOT		
205 II 1.9 GTI	D6B(XU9JA), DKZ(XU9JAZ)	10/87 ⇨ 09/98
309 II 1.6	XU5JA	07/89 ⇨ 12/93
309 II 1.6 GTi	--	09/89 ⇨ 10/93
309 II 1.9 GTI	DKZ(XU9JAZ)	07/89 ⇨ 12/93

FACET 4.8493

07

IGNITION CABLE SETS

Adatt./Suitable:

[03] **Supplied until depletion**
- Fornibile fino ad esaurimento delle scorte
- Fourni jusqu'à épuisement du stock
- Lieferbar solange vorrat reicht
- Suministrado hasta el stock termina

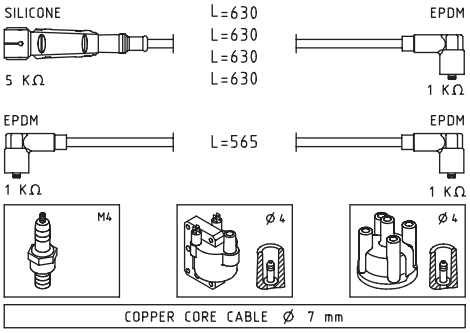

VW		
POLO II 1.0	AAK, GL, HZ	10/81 ⇨ 09/94
POLO II 1.0 Cat	AAK	08/89 ⇨ 09/94
POLO II 1.1	HB	10/81 ⇨ 09/89
POLO II 1.3	GK, GT, HH, HJ, HK, HW, MH	10/81 ⇨ 09/89
POLO II 1.3 Cat	2G, MH, NZ	07/87 ⇨ 09/94
POLO II 1.3 G40	PY	01/87 ⇨ 08/90
JETTA II 1.0	HZ	08/85 ⇨ 10/91
JETTA II 1.3	GT, HK, MH	01/84 ⇨ 06/87
JETTA II 1.3 Cat	2G, MH, NZ	06/87 ⇨ 12/91
GOLF II 1.0	HZ	08/85 ⇨ 10/91
GOLF II 1.3	GT, HK, MH	08/83 ⇨ 06/87
GOLF II 1.3 Cat	2G, NZ	06/86 ⇨ 12/92
GOLF III 1.4	ABD	10/91 ⇨ 04/99
GOLF III 1.6	ABU	09/92 ⇨ 08/97
SCIROCCO II 1.3	HK	08/83 ⇨ 07/84
VENTO 1.4	ABD	11/91 ⇨ 09/98

FACET 4.8494

07

IGNITION CABLE SETS

Adatt./Suitable:

BOSCH
0 986 356 727
0 986 357 098

CITROËN
5967 L1
5967 L6
5967 L8
5967 N1
96 088 851
96 099 749
96 161 266

FIAT
9617237080

HITACHI
134432

MAGNETI MARELLI
941085180570

PEUGEOT
5967 L1
5967 L6
5967 L8
5967 N1

[03] **Supplied until depletion**
- Fornibile fino ad esaurimento delle scorte
- Fourni jusqu'à épuisement du stock
- Lieferbar solange vorrat reicht
- Suministrado hasta el stock termina

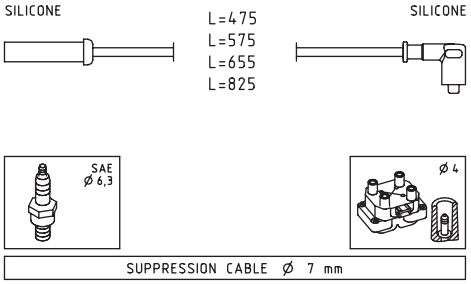

CITROËN		
XANTIA I 2.0	RFXXU10J2C/ZL3	03/93 ⇨ 05/95
XANTIA I 2.0 i	RFX(XU10J2C)	03/93 ⇨ 04/03
XANTIA I 2.0 Turbo	RGX(XU10J2TE)	06/95 ⇨ 04/03
EVASION 2.0	RFU(XU10J2/C)	06/94 ⇨ 07/02
EVASION 2.0 Turbo C.T.	RGX(XU10J2TE)	06/94 ⇨ 07/02
XM I 2.0 i	RDZ(XU10MZ), RFZ(XU10J2)	05/89 ⇨ 06/94
XM I 2.0 i Turbo	RGY(XU10J2TE/Z)	09/92 ⇨ 06/94
XM I 2.0 Turbo	RGY(XU10J2TE/Z)	09/92 ⇨ 04/94
XANTIA II 2.0 i	RFX(XU10J2C)	01/98 ⇨ 04/03
XANTIA II 2.0 Turbo	RGX(XU10J2TE)	01/98 ⇨ 04/03
XM II 2.0	XU10J2	08/94 ⇨ 07/99
XM II 2.0 Turbo	RGX(XU10J2TE), RGY(XU10J2TE/Z)	05/94 ⇨ 10/00
ZX 2.0	RFX(XU10J2C)	07/94 ⇨ 10/97
ZX 2.0 i	RFX(XU10J2C), XU10J2	07/92 ⇨ 10/97
FIAT		
ULYSSE I 2.0	RFU(XU10J2C)	06/94 ⇨ 08/02
ULYSSE I 2.0 Turbo	RGX(XU10J2CTE)	06/94 ⇨ 08/02
PEUGEOT		
306 2.0	RFX(XU10J2)	03/94 ⇨ 04/02
306 2.0 ST	RFX(XU10J2)	07/94 ⇨ 05/01
306 2.0 XSi	RFX(XU10J2)	05/93 ⇨ 05/01
405 II 2.0	RFX(XU10J2)	08/92 ⇨ 10/96
405 II 2.0 4x4	RFX(XU10J2)	08/92 ⇨ 10/96
405 II 2.0 X4	RFX(XU10J2)	08/92 ⇨ 10/95
406 2.0 Turbo	RGX(XU10J2TE)	04/96 ⇨ 10/04
605 2.0	RFZ(XU10J2Z)	06/89 ⇨ 09/99
605 2.0 Turbo	RGX(XU10J2TE), RGY(XU10J2TE)	07/91 ⇨ 09/99
806 2.0	RFU(XU10J2)	06/94 ⇨ 08/02
806 2.0 Turbo	RGX(XU10J2TE)	06/94 ⇨ 08/02

FACET 4.8507

07

IGNITION CABLE SETS

Adatt./Suitable:

FIAT
4380722
4830772
5888330

MAGNETI MARELLI
941094060576

[03] **Supplied until depletion**
- Fornibile fino ad esaurimento delle scorte
- Fourni jusqu'à épuisement du stock
- Lieferbar solange vorrat reicht
- Suministrado hasta el stock termina

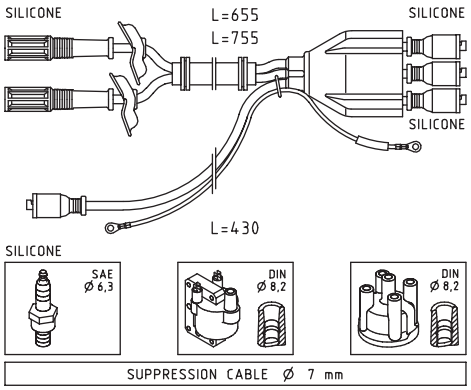

FIAT		
126 600	126A.000	09/72 ⇨ 06/77

FACET 4.8509

05

IGNITION CABLE SETS

Adatt./Suitable:

BOSCH
0 986 356 862

GENERAL MOTORS
90 113 411

MAGNETI MARELLI
941125070664

OPEL
16 12 434

[03] **Supplied until depletion**
- Fornibile fino ad esaurimento delle scorte
- Fourni jusqu'à épuisement du stock
- Lieferbar solange vorrat reicht
- Suministrado hasta el stock termina

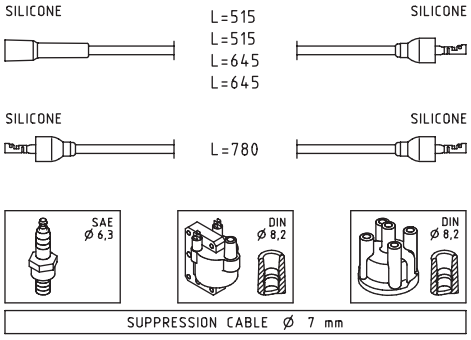

OPEL		
CORSA A 1.0	10S	09/82 ⇨ 03/93
CORSA A 1.2	12N, 12NC, E12GV	09/82 ⇨ 08/90
CORSA A 1.2 N	12NC, E12GV	01/85 ⇨ 10/87
KADETT E 1.2	12SC	09/84 ⇨ 07/86

FACET 4.8511 — 07

IGNITION CABLE SETS

Adatt./Suitable:

[00] **Eliminated on 22-02-2022. Please verify the availability through our local distributors**

- Eliminato il 22-02-2022. Verificare la disponibilità presso i nostri distributori
- Eliminé le 22-02-2022. Verifier la disponibilité auprès de nos distributeurs sur place
- Am 22-02-2022 gestrichen. Evtl. Verfügbarkeit bitte bei unseren Händlern prüfen
- Eliminado en fecha 22-02-2022. Verificar la disponibilidad a través de nuestros distribuidores locales

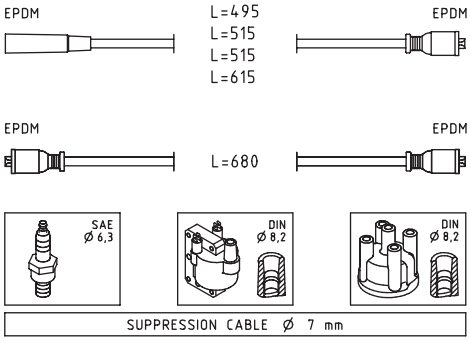

DACIA		
ARO 10	--	01/72 ⇨ 12/80
LADA		
LADA 1.2	--	01/80 ⇨
LADA 1.3	--	01/80 ⇨
LADA 1.5	--	01/80 ⇨
NIVA I 1600	BA32121	12/76 ⇨ 12/93

FACET 4.8513 — 07

IGNITION CABLE SETS

Adatt./Suitable:

BOSCH
0 986 356 723

GENERAL MOTORS
90 369 758
90 398 586
90 442 448

OPEL
16 12 523
16 12 527
16 12 532
16 12 545

[00] **Eliminated on 14-04-2020. Please verify the availability through our local distributors**

- Eliminato il 14-04-2020. Verificare la disponibilità presso i nostri distributori
- Eliminé le 14-04-2020. Verifier la disponibilité auprès de nos distributeurs sur place
- Am 14-04-2020 gestrichen. Evtl. Verfügbarkeit bitte bei unseren Händlern prüfen
- Eliminado en fecha 14-04-2020. Verificar la disponibilidad a través de nuestros distribuidores locales

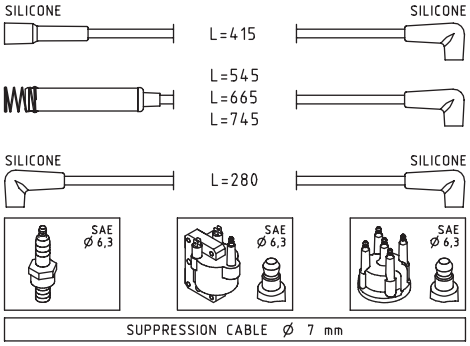

OPEL		
VECTRA A 1.6 i	C16NZ, E16NZ	09/88 ⇨ 11/95
VECTRA A 1.6 i Cat	C16NZ	09/88 ⇨ 11/95

FACET 4.8514 — 07

IGNITION CABLE SETS

Adatt./Suitable:

BOSCH
0 986 356 723

GENERAL MOTORS
90 008 241
90 297 570
90 398 282
90 442 051
90 442 405

HITACHI
134202

MAGNETI MARELLI
941125180672

OPEL
16 12 459
16 12 479
16 12 524
16 12 539
16 12 542

[03] **Supplied until depletion**

- Fornibile fino ad esaurimento delle scorte
- Fourni jusqu'à épuisement du stock
- Lieferbar solange vorrat reicht
- Suministrado hasta el stock termina

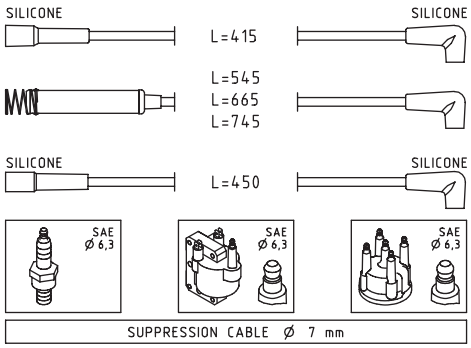

OPEL		
ASCONA C 1.3 N	13N	09/81 ⇨ 08/86
ASCONA C 1.3 S	13S	09/81 ⇨ 08/88
ASCONA C 1.6	16SV	09/86 ⇨ 08/88
ASTRA F 1.6 i	C16NZ	09/91 ⇨ 09/98
CORSA A 1.6 GSI	C16NZ	08/88 ⇨ 09/92
KADETT D 1.2	12ST	08/82 ⇨ 08/84
KADETT E 1.2	12ST	09/84 ⇨ 08/88
KADETT E 1.3 i Cat	C13N	09/85 ⇨ 08/91
KADETT E 1.3 N	13N, 13NB	09/84 ⇨ 08/91
KADETT E 1.3 S	13S	09/84 ⇨ 02/93
KADETT E 1.6	16SV	09/86 ⇨ 12/91
KADETT E 1.6 i	16SV, C16NZ, E16NZ	09/86 ⇨ 07/94
KADETT E 1.6 i Cat	C16LZ, C16NZ	09/86 ⇨ 02/93
KADETT E 1.6 S	16SV	09/86 ⇨ 08/91
VECTRA A 1.6	16SV	09/88 ⇨ 05/93
VECTRA A 1.6 S	16SV	09/88 ⇨ 05/93
VAUXHALL		
ASTRA III 1.6 i	C16NZ	09/91 ⇨ 12/98
ASTRAVAN I 1.6 i	C16NZ	10/91 ⇨ 08/98

FACET 4.8527 — 07

IGNITION CABLE SETS

Adatt./Suitable:

BOSCH
0 986 356 850

GENERAL MOTORS
90 350 555
90 442 064

OPEL
16 12 497
16 12 531

[00] **Eliminated on 22-02-2022. Please verify the availability through our local distributors**

- Eliminato il 22-02-2022. Verificare la disponibilità presso i nostri distributori
- Eliminé le 22-02-2022. Verifier la disponibilité auprès de nos distributeurs sur place
- Am 22-02-2022 gestrichen. Evtl. Verfügbarkeit bitte bei unseren Händlern prüfen
- Eliminado en fecha 22-02-2022. Verificar la disponibilidad a través de nuestros distribuidores locales

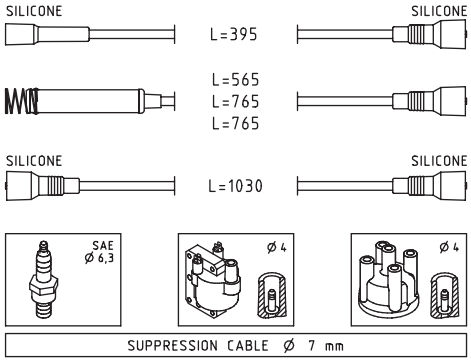

OPEL		
FRONTERA A 2.0 i	C20NE	03/92 ⇨ 10/98
OMEGA A 1.8	18SEH, E18NVR, S18NV	09/86 ⇨ 03/94
OMEGA A 1.8 N	18NV	09/86 ⇨ 08/87
OMEGA A 1.8 S	18SV	09/86 ⇨ 03/94
OMEGA A 2.0	20SE, C20NE	09/86 ⇨ 04/94
OMEGA A 2.0 i	C20NE	09/86 ⇨ 04/94
OMEGA B 2.0	20SE	03/94 ⇨ 12/00
VAUXHALL		
FRONTERA A 2.0	C20NE	04/95 ⇨ 08/98
FRONTERA A 2.0 i	C20NE	03/92 ⇨ 10/98
OMEGA B 2.0	20SE	09/95 ⇨ 09/96

FACET 4.8539 — 07

IGNITION CABLE SETS

Adatt./Suitable:

[00] **Eliminated on 14-02-2022. Please verify the availability through our local distributors**

- Eliminato il 14-02-2022. Verificare la disponibilità presso i nostri distributori
- Eliminé le 14-02-2022. Verifier la disponibilité auprès de nos distributeurs sur place
- Am 14-02-2022 gestrichen. Evtl. Verfügbarkeit bitte bei unseren Händlern prüfen
- Eliminado en fecha 14-02-2022. Verificar la disponibilidad a través de nuestros distribuidores locales

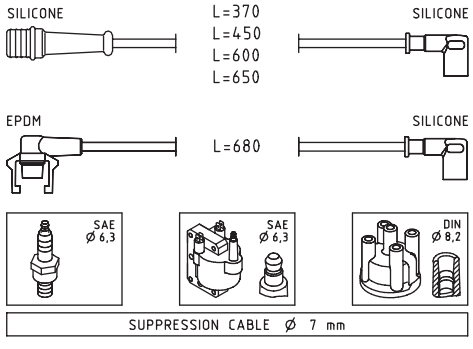

RENAULT		
21 2.0	14ZR, J6R758, J6R793, J7R747, J7R750, J7R751	03/86 ⇨ 12/93
21 2.0 4x4	14ZR, J7R747	03/89 ⇨ 12/93

RENAULT		
21 2.0 Turbo	J7R752	04/87 ⇨ 03/90
21 2.0 Turbo 4x4	J7R752	08/89 ⇨ 10/93
21 2.2	J6T790, J6T791, J7T754, J7T755, J7T756	03/86 ⇨ 12/95
21 2.2 4x4	J7T754, J7T755	06/86 ⇨ 06/94
25 2.0	J7R722, J7R723	03/87 ⇨ 12/93
25 2.0 12V	7CYQD80D-E3, J7R721	06/88 ⇨ 12/93
25 2.2	04TNV88-C, 74G69-S4M, J7T706, J7T707, J7T708, J7T715, J7T730, J7T731, J7T732	04/84 ⇨ 12/92
ESPACE I 2.0 i	J7R760	01/89 ⇨ 12/90
ESPACE I 2.0 i Quadra	J7R760	03/88 ⇨ 12/92
ESPACE I 2.2	2QG15DE	07/86 ⇨ 12/90
ESPACE I 2.2 Quadra	2QG15DE	01/88 ⇨ 12/90
ESPACE II 2.0	J7R768	01/91 ⇨ 10/96
ESPACE II 2.2	J7T773, J7T776	01/91 ⇨ 10/96
ESPACE II 2.2 4x4	J7T773	03/91 ⇨ 12/96
TRAFIC I 2.2	J7T600, J7T780	05/89 ⇨ 04/98
TRAFIC I 2.2 4x4	J7T600, J7T780	05/89 ⇨ 04/98

FACET 4.8543

07

IGNITION CABLE SETS

Adatt./Suitable:

00 Eliminated on 14-02-2022. Please verify the availability through our local distributors

- Eliminato il 14-02-2022. Verificare la disponibilità presso i nostri distributori
- Eliminé le 14-02-2022. Verifier la disponibilité auprès de nos distributeurs sur place
- Am 14-02-2022 gestrichen. Evtl. Verfügbarkeit bitte bei unseren Händlern prüfen
- Eliminado en fecha 14-02-2022. Verificar la disponibilidad a través de nuestros distribuidores locales

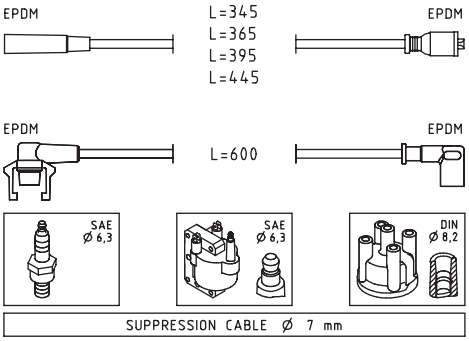

RENAULT		
19 I 1.2	C1G730	01/88 ⇨ 12/92
EXPRESS 1.2	C1G	01/85 ⇨ 10/90
EXPRESS 1.4	C1J, C2J	01/85 ⇨ 10/90
EXPRESS 1.4i	C3G/C3J	01/85 ⇨ 10/90

FACET 4.8572

07,5

IGNITION CABLE SETS

Adatt./Suitable:

BMW
12 12 1 705 697
BOSCH
0 356 901 808

00 Eliminated on 02-03-2020. Please verify the availability through our local distributors

- Eliminato il 02-03-2020. Verificare la disponibilità presso i nostri distributori
- Eliminé le 02-03-2020. Verifier la disponibilité auprès de nos distributeurs sur place
- Am 02-03-2020 gestrichen. Evtl. Verfügbarkeit bitte bei unseren Händlern prüfen
- Eliminado en fecha 02-03-2020. Verificar la disponibilidad a través de nuestros distribuidores locales

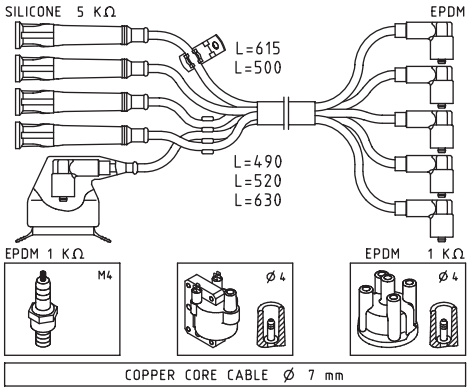

BMW		
3 II 316	M10B18(184VC), M10B18(184VD)	09/83 ⇨ 06/88
3 II 316 i	M10B18(184KA)	08/87 ⇨ 08/88
3 II 318 i	M10B18(184EA), M10B18(184KA)	09/82 ⇨ 08/88
5 II 518	M10B18(184VC), M10B18(184VD)	06/81 ⇨ 09/84
5 II 518 i	M10B18(184EB)	05/81 ⇨ 12/87
5 I 518	M10B18(184VB)	07/74 ⇨ 05/81

FACET 4.8573

IGNITION CABLE SETS

Adatt./Suitable:

BMW
12 12 1 717 646
12 12 1 727 686
BOSCH
0 986 356 325

00 Eliminated on 14-04-2020. Please verify the availability through our local distributors

- Eliminato il 14-04-2020. Verificare la disponibilità presso i nostri distributori
- Eliminé le 14-04-2020. Verifier la disponibilité auprès de nos distributeurs sur place
- Am 14-04-2020 gestrichen. Evtl. Verfügbarkeit bitte bei unseren Händlern prüfen
- Eliminado en fecha 14-04-2020. Verificar la disponibilidad a través de nuestros distribuidores locales

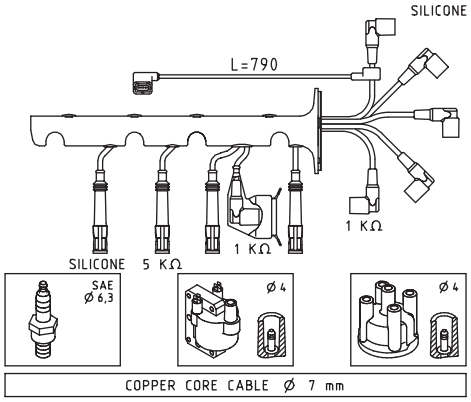

BMW		
3 II 316 i	M40B16(164E1)	09/87 ⇨ 06/94
3 II 318 i	M40B18(184E1)	06/87 ⇨ 06/94

FACET 4.8578

IGNITION CABLE SETS

Adatt./Suitable:

BMW
12 12 1 722 253
BOSCH
0 356 901 814

00 Eliminated on 22-02-2022. Please verify the availability through our local distributors

- Eliminato il 22-02-2022. Verificare la disponibilità presso i nostri distributori
- Eliminé le 22-02-2022. Verifier la disponibilité auprès de nos distributeurs sur place
- Am 22-02-2022 gestrichen. Evtl. Verfügbarkeit bitte bei unseren Händlern prüfen
- Eliminado en fecha 22-02-2022. Verificar la disponibilidad a través de nuestros distribuidores locales

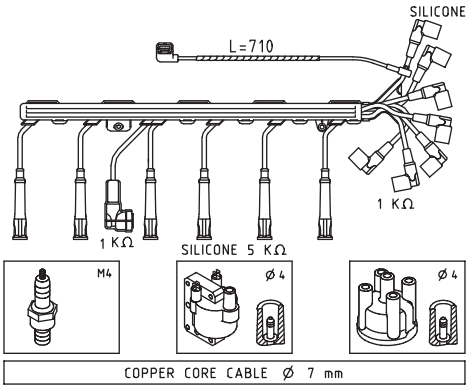

BMW		
5 II 530 i	--	01/84 ⇨ 12/88
5 II 530 i	M30B30(306KA)	01/88 ⇨ 04/90
5 III 535 i	M30B34(346KB)	11/87 ⇨ 02/93
7 II 730 i, iL	M30B30(306EA), M30B30(306KA)	03/85 ⇨ 03/94
7 II 735 i, iL	M30B34(346KB), M30B35(Motronic, 9.2:1)	06/86 ⇨ 07/92

FACET 4.8587

IGNITION CABLE SETS

Adatt./Suitable:

BMW
12 12 1 720 529
BOSCH
0 986 356 323

00 Eliminated on 14-04-2020. Please verify the availability through our local distributors

- Eliminato il 14-04-2020. Verificare la disponibilità presso i nostri distributori
- Eliminé le 14-04-2020. Verifier la disponibilité auprès de nos distributeurs sur place
- Am 14-04-2020 gestrichen. Evtl. Verfügbarkeit bitte bei unseren Händlern prüfen
- Eliminado en fecha 14-04-2020. Verificar la disponibilidad a través de nuestros distribuidores locales

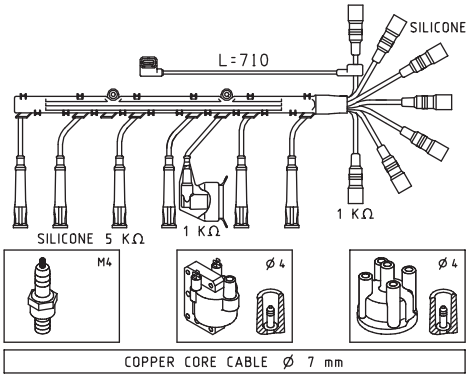

BMW		
3 II 320 i	M20B20(206EB), M20B20(206KA)	09/82 ⇨ 11/93
3 II 325 i	M20B25(256E1), M20B25(256E2), M20B25(256EX), M20B25(256K1)	09/83 ⇨ 11/93

FACET 4.8597

IGNITION CABLE SETS

Adatt./Suitable:

BMW
12 12 1 726 037
BOSCH
0 356 901 819
0 986 356 362

[03] **Supplied until depletion**
- Fornibile fino ad esaurimento delle scorte
- Fourni jusqu'à épuisement du stock
- Lieferbar solange vorrat reicht
- Suministrado hasta el stock termina

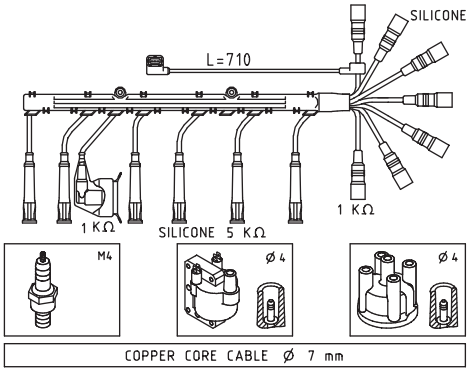

BMW		
3 II 320 i	M20B20(206EB), M20B20(206KA)	09/82 ⇨ 11/93
3 II 325 i	M20B25(256E1), M20B25(256E2), M20B25(256EX), M20B25(256K1)	09/83 ⇨ 11/93
5 III 520 i	M20B20(206KA)	06/87 ⇨ 09/90
5 III 525 i	M20B25(256K1)	02/88 ⇨ 08/90

FACET 4.8605

IGNITION CABLE SETS

Adatt./Suitable:

BMW
12 12 1 727 855
BOSCH
0 986 356 325

[03] **Supplied until depletion**
- Fornibile fino ad esaurimento delle scorte
- Fourni jusqu'à épuisement du stock
- Lieferbar solange vorrat reicht
- Suministrado hasta el stock termina

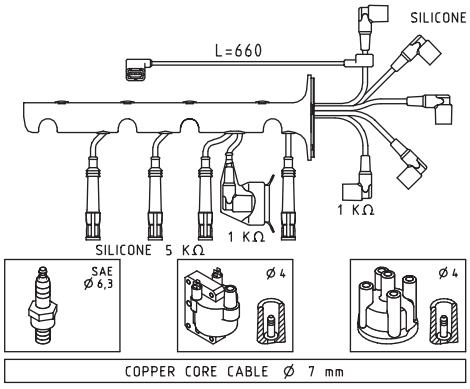

BMW		
3 III 316 i	M40B16(164E1), M43B16(164E2)	09/90 ⇨ 09/93
3 III 318 i	M40B18(184E1)	09/90 ⇨ 08/93

FACET 4.8608 07,5

IGNITION CABLE SETS

Adatt./Suitable:

BOSCH
0 986 356 705
HITACHI
134276
NISSAN
22440-99B00
22440-99B05
22440-99B06

[03] **Supplied until depletion**
- Fornibile fino ad esaurimento delle scorte
- Fourni jusqu'à épuisement du stock
- Lieferbar solange vorrat reicht
- Suministrado hasta el stock termina

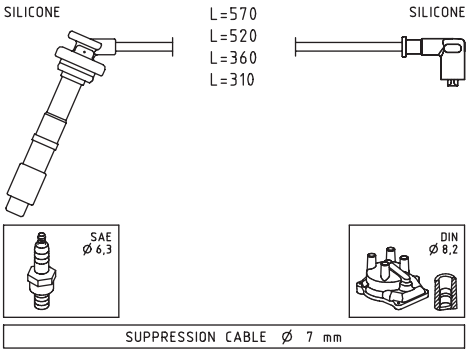

NISSAN		
MICRA II 1.0 i 16V	CG10DE	08/92 ⇨ 07/00
MICRA II 1.3 i 16V	CG13DE	08/92 ⇨ 09/00

FACET 4.8609 08

IGNITION CABLE SETS

Adatt./Suitable:

NISSAN
22450-71J25

[00] **Eliminated on 14-04-2020. Please verify the availability through our local distributors**
- Eliminato il 14-04-2020. Verificare la disponibilità presso i nostri distributori
- Eliminé le 14-04-2020. Verifier la disponibilité auprès de nos distributeurs sur place
- Am 14-04-2020 gestrichen. Evtl. Verfügbarkeit bitte bei unseren Händlern prüfen
- Eliminado en fecha 14-04-2020. Verificar la disponibilidad a través de nuestros distribuidores locales

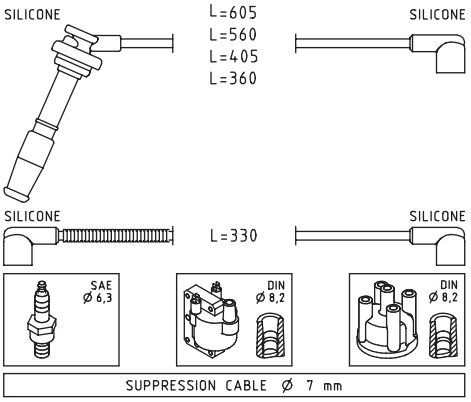

NISSAN		
PRIMERA I 1.6	GA16DS	06/90 ⇨ 01/96

FACET 4.8612 07

IGNITION CABLE SETS

Adatt./Suitable:

[00] **Eliminated on 22-02-2022. Please verify the availability through our local distributors**
- Eliminato il 22-02-2022. Verificare la disponibilità presso i nostri distributori
- Eliminé le 22-02-2022. Verifier la disponibilité auprès de nos distributeurs sur place
- Am 22-02-2022 gestrichen. Evtl. Verfügbarkeit bitte bei unseren Händlern prüfen
- Eliminado en fecha 22-02-2022. Verificar la disponibilidad a través de nuestros distribuidores locales

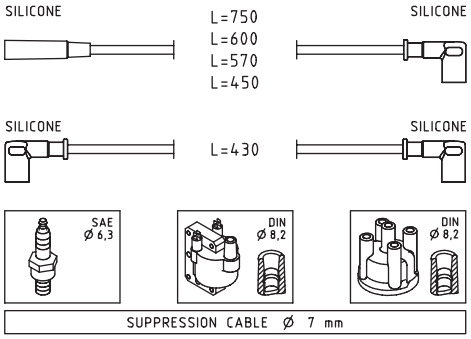

SEAT		
IBIZA I 1.2	021A1000	11/84 ⇨ 12/93
IBIZA I 1.2 i	021C.1000	01/89 ⇨ 05/93
IBIZA I 1.5 i	021B.2000	10/86 ⇨ 05/93
MALAGA 1.2	021A1000	05/85 ⇨ 12/93
MALAGA 1.5	021A2000	05/85 ⇨ 12/93

FACET 4.8613 07

IGNITION CABLE SETS

Adatt./Suitable:

FIAT
7735100

[00] **Eliminated on 04-08-2020. Please verify the availability through our local distributors**
- Eliminato il 04-08-2020. Verificare la disponibilità presso i nostri distributori
- Eliminé le 04-08-2020. Verifier la disponibilité auprès de nos distributeurs sur place
- Am 04-08-2020 gestrichen. Evtl. Verfügbarkeit bitte bei unseren Händlern prüfen
- Eliminado en fecha 04-08-2020. Verificar la disponibilidad a través de nuestros distribuidores locales

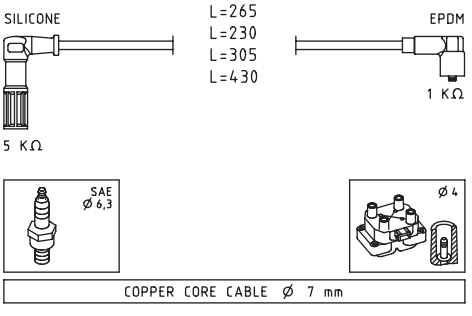

FIAT		
PUNTO I 1.4 GT Turbo	176A4.000, 176B6.000	10/93 ⇨ 07/99

FACET 4.8615 — 05

IGNITION CABLE SETS

Adatt./Suitable:

FIAT
7694366
HITACHI
134484
MAGNETI MARELLI
941095680607

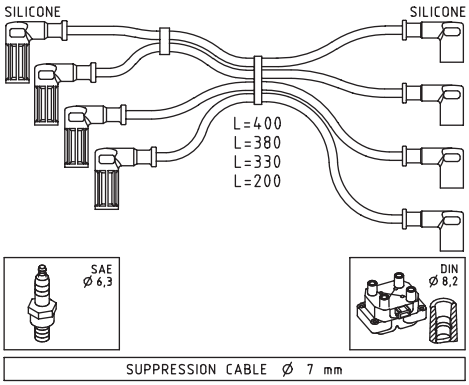

FIAT		
CINQUECENTO 0.9	170A1.000	07/91 ⇨ 12/93
CINQUECENTO 0.9 i.e.	170A1.046	07/91 ⇨ 09/94
CINQUECENTO 0.9 i.e. S	1170A1.000, 1170A1.046	07/91 ⇨ 07/99
PANDA I 900	1170A1.046	04/92 ⇨ 12/96
SEICENTO / 600 0.9	1170A1.046	11/97 ⇨ 01/10

FACET 4.8616 — 07

IGNITION CABLE SETS

Adatt./Suitable:

BOSCH
0 986 356 754
FIAT
7776810
HITACHI
134467
LANCIA
7776810
MAGNETI MARELLI
941095130583
941095780616

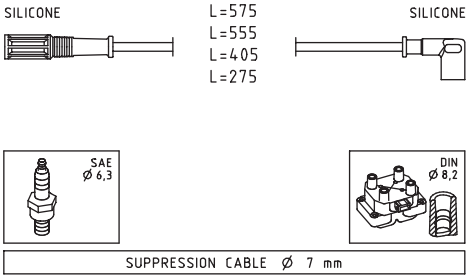

FIAT		
CINQUECENTO 1.1 Sporting	176B2.000	10/94 ⇨ 01/98
PUNTO I 1.1	176B2.000	04/96 ⇨ 02/00
PUNTO I 55 1.1	176A6.000, 176B2.000	09/93 ⇨ 09/99
PUNTO I 60 1.2	176A7.000, 176B1.000, 176B4.000	09/93 ⇨ 06/00
PUNTO I 75 1.2	176A8.000	10/93 ⇨ 09/99
PALIO 1.2	176A8.000, 178B5.000, 178B7.045, 178C4.066, 178E2.000, 188A4.000	04/96 ⇨
PALIO 1.2 75	178B7.045	03/98 ⇨
PALIO 1.2 MPI	178C4.066	01/02 ⇨
PANDA I 1.1	156C.046	05/91 ⇨ 03/95
PANDA I 1000 4x4	141C2.000	05/86 ⇨ 12/94
PANDA I 1000 i.e	156A2.246	08/92 ⇨ 02/04
PANDA I 1000 i.e. Cat	141C2.000, 156A2.246	10/87 ⇨ 08/98
PANDA I 1100	156C.046, 176B2.000	05/91 ⇨ 12/99
PANDA I 1100 4x4	176B2.000	02/95 ⇨ 07/04
PANDA I 1100 Trekking 4x4	156C.046	10/91 ⇨ 07/04
SEICENTO / 600 1.1	176B2.000	01/98 ⇨ 01/10
SIENA 1.2	178B7.045	01/98 ⇨
SIENA 1.3	178B5.000, 178C4.066, 188A4.000, 188A5.000	09/01 ⇨ 12/12
STRADA 1.2	178B5.000, 178B7.045, 188A4.000	04/03 ⇨
STRADA 1.2 Trekking	--	11/05 ⇨
UNO Mondo 1.2 i.e. [IND]	178D5.066	01/96 ⇨

LANCIA		
Y I 1.1	176B2.000	11/95 ⇨ 09/03
Y I 1.2	840A3.000	03/96 ⇨ 09/03

FACET 4.8623 — 08

IGNITION CABLE SETS

Adatt./Suitable:

[03] **Supplied until depletion**
- Fornibile fino ad esaurimento delle scorte
- Fourni jusqu'à épuisement du stock
- Lieferbar solange vorrat reicht
- Suministrado hasta el stock termina

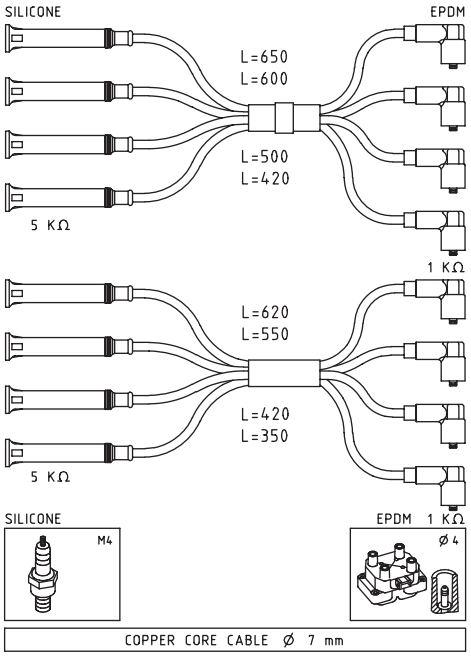

ALFA ROMEO		
155 1.7 T.S.	AR67103, AR67105	04/93 ⇨ 04/96
155 1.8 T.S.	AR67101	02/92 ⇨ 05/94
155 1.8 T.S. Sport	AR67101, AR67102	03/92 ⇨ 12/96
155 2.0 T.S.	AR67201, AR67202	02/92 ⇨ 05/95

FACET 4.8634 — 07

IGNITION CABLE SETS

Adatt./Suitable:

BOSCH
0 986 357 063
0 986 357 124
GENERAL MOTORS
90 442 404
90 486 611
90 486 612
HITACHI
134258
134871
MAGNETI MARELLI
941125190673
OPEL
16 12 543
16 12 591
16 12 592
16 12 651

[03] **Supplied until depletion**
- Fornibile fino ad esaurimento delle scorte
- Fourni jusqu'à épuisement du stock
- Lieferbar solange vorrat reicht
- Suministrado hasta el stock termina

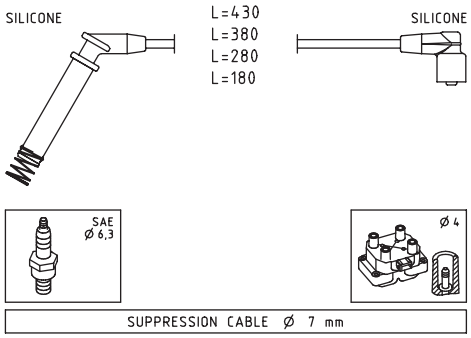

OPEL		
ASTRA F 1.4	14SE	09/92 ⇨ 09/98
ASTRA F 1.4 Si	C14SE	03/92 ⇨ 03/01
ASTRA F 1.6	16NZR	09/95 ⇨ 09/98
ASTRA F 1.6 i	X16SZ, X16SZR	09/91 ⇨ 01/05
ASTRA F 1.6 Si	C16SE	03/92 ⇨ 12/94
COMBO B 1.4	C14SE	07/94 ⇨ 10/01
CORSA A 1.4 Si	C14SE	09/91 ⇨ 03/93
CORSA B 1.4	C14SE	04/93 ⇨ 08/94
CORSA B 1.4 Si	C14SE	03/93 ⇨ 09/00
VECTRA A 1.6 i	X16SZ	09/93 ⇨ 11/95

VAUXHALL		
ASTRA III 1.4 i	C14SE	03/91 ⇨ 03/01
ASTRA III 1.6	C16SE	03/94 ⇨ 08/95
ASTRA III 1.6 i	C16SE, X16SZ, X16SZR	03/92 ⇨ 09/98
ASTRA III 1.6 Si	C16SE	03/91 ⇨ 12/94
ASTRAVAN I 1.6 i	X16SZ	09/94 ⇨ 08/96
COMBO B 1.4	C14SE	07/94 ⇨ 10/01
CORSA B 1.4 i S	C14SE	03/93 ⇨ 09/00

FACET 4.8650 — 07

IGNITION CABLE SETS

Adatt./Suitable:

[00] **Eliminated on 26-10-2020. Please verify the availability through our local distributors**

- Eliminato il 26-10-2020. Verificare la disponibilità presso i nostri distributori
- Eliminé le 26-10-2020. Verifier la disponibilité auprès de nos distributeurs sur place
- Am 26-10-2020 gestrichen. Evtl. Verfügbarkeit bitte bei unseren Händlern prüfen
- Eliminado en fecha 26-10-2020. Verificar la disponibilidad a través de nuestros distribuidores locales

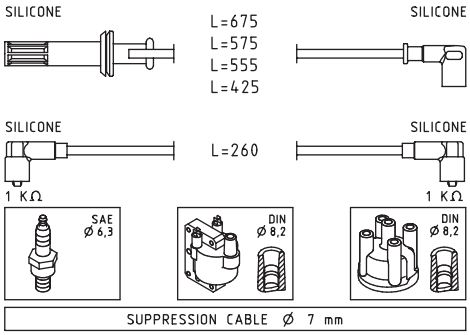

FIAT		
COUPE 2.0 16V	836A3.000	11/93 ⇨ 08/96
COUPE 2.0 16V [BRA]	836A3.011	11/93 ⇨ 08/96
TIPO I 2.0	836A3.011	03/93 ⇨ 04/95
TIPO I 2.0 16V	160A8.046	07/91 ⇨ 04/95
TIPO I 2.0 i.e. 16V Sport	836A3.000	03/93 ⇨ 04/95
FIAT (BR)		
COUPÈ 2.0i 16V	2.0Mpi	01/95 ⇨ 12/97
TIPO 2.0i 16V	2.0Mpi	01/94 ⇨ 12/95
LANCIA		
DEDRA 2.0 16V	836A3.000	07/94 ⇨ 07/99
DEDRA 2.0 Integrale	836A3.000	07/94 ⇨ 07/99
DELTA II 2.0 16V	836A3.000	06/93 ⇨ 08/99

FACET 4.8655 — 07

IGNITION CABLE SETS

Adatt./Suitable:

BOSCH
0 986 356 854
CITROËN
5967 N2
FIAT
7735397
INNOCENTI
7735397
LANCIA
7735397
MAGNETI MARELLI
941095770615
PEUGEOT
5967 N2

[00] **Eliminated on 04-05-2021. Please verify the availability through our local distributors**

- Eliminato il 04-05-2021. Verificare la disponibilità presso i nostri distributori
- Eliminé le 04-05-2021. Verifier la disponibilité auprès de nos distributeurs sur place
- Am 04-05-2021 gestrichen. Evtl. Verfügbarkeit bitte bei unseren Händlern prüfen
- Eliminado en fecha 04-05-2021. Verificar la disponibilidad a través de nuestros distribuidores locales

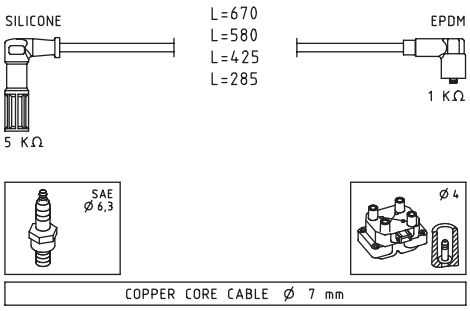

CITROËN		
JUMPY I 1.6	1580SPI, 220A2.000	10/95 ⇨ 08/00
JUMPY I 1.6 i	1580SPI, 220A2.000	10/95 ⇨ 08/00
FIAT		
ELBA 1.4	146D5.000	10/93 ⇨ 02/95
FIORINO II 1.4	146C5.000	11/92 ⇨ 05/01
FIORINO II 1.6	146D6.000	01/94 ⇨ 05/01
FIORINO II 70 i.e. 1.4	146D5.000	05/94 ⇨ 05/01
FIORINO II 75 i.e. 1.6	146D6.000	10/93 ⇨ 05/01
SCUDO I 1.6	220A2.000	02/96 ⇨ 12/06
TEMPRA 1.4 i.e.	836A4.000	04/90 ⇨ 08/96
TEMPRA 1.6 i.e.	835C1.000	10/90 ⇨ 08/96
TIPO I 1.4 i.e.	836A4.000	05/89 ⇨ 04/95
TIPO I 1.6	835C1.000	03/93 ⇨ 10/95
TIPO I 1.6 i.e.	835C1.000	10/92 ⇨ 04/95
TIPO I 1.6 i.e. [BRA]	160E2.011	03/93 ⇨ 04/95
FIAT (BR)		
TIPO 1.6i	1.6Spi	01/93 ⇨ 12/95
INNOCENTI		
ELBA 1.4 i.e.	146D5.000	09/94 ⇨ 12/96
ELBA 1.6 i.e.	146D6.000	09/94 ⇨ 12/96
LANCIA		
DEDRA 1.6 i.e.	835C1.000	04/93 ⇨ 07/99
DELTA II 1.4 i.e.	836A4.000	10/94 ⇨ 08/99
DELTA II 1.6 i.e.	835C1.000	06/93 ⇨ 08/99
PEUGEOT		
EXPERT I 1.6	222A2(1580SPI)	02/96 ⇨ 09/00

FACET 4.8660 — 09

IGNITION CABLE SETS

Adatt./Suitable:

ALFA ROMEO
60534855
60573030

[00] **Eliminated on 12-01-2021. Please verify the availability through our local distributors**

- Eliminato il 12-01-2021. Verificare la disponibilità presso i nostri distributori
- Eliminé le 12-01-2021. Verifier la disponibilité auprès de nos distributeurs sur place
- Am 12-01-2021 gestrichen. Evtl. Verfügbarkeit bitte bei unseren Händlern prüfen
- Eliminado en fecha 12-01-2021. Verificar la disponibilidad a través de nuestros distribuidores locales

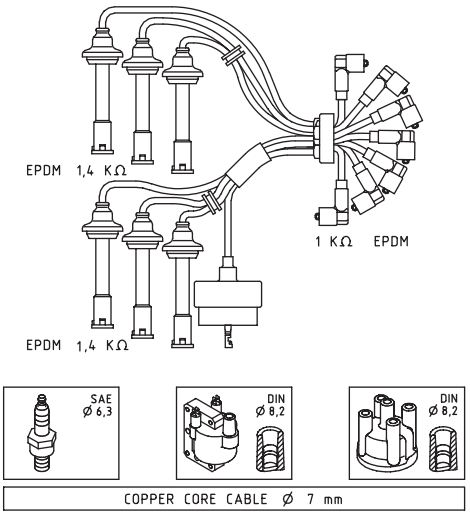

ALFA ROMEO		
75 2.5 V6	AR01646, AR01648, AR01911	05/85 ⇨ 08/86
75 3.0 V6	AR06120, AR61503	01/87 ⇨ 02/92
75 3.0 V6 Cat	AR06124	01/87 ⇨ 02/92

FACET 4.8666 — 09

IGNITION CABLE SETS

Adatt./Suitable:

[00] **Eliminated on 15-01-2020. Please verify the availability through our local distributors**

- Eliminato il 15-01-2020. Verificare la disponibilità presso i nostri distributori
- Eliminé le 15-01-2020. Verifier la disponibilité auprès de nos distributeurs sur place
- Am 15-01-2020 gestrichen. Evtl. Verfügbarkeit bitte bei unseren Händlern prüfen
- Eliminado en fecha 15-01-2020. Verificar la disponibilidad a través de nuestros distribuidores locales

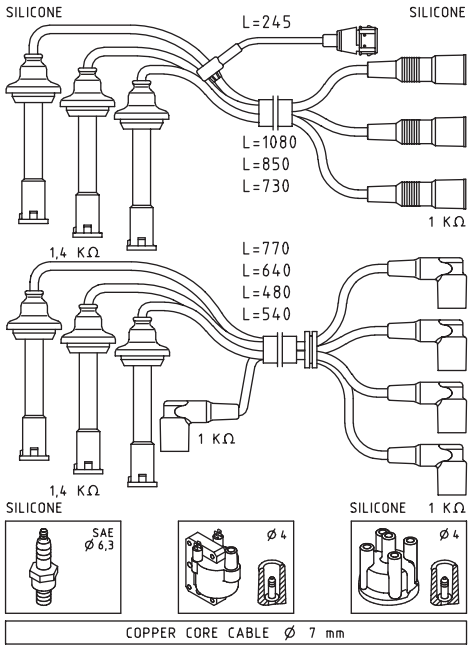

ALFA ROMEO		
164 2.0 Turbo	AR64102	07/90 ⇨ 10/92
164 2.0 V6 Turbo	AR64101	03/91 ⇨ 09/92

FACET 4.8674 — 07

IGNITION CABLE SETS

Adatt./Suitable:

BOSCH
0 986 356 767
0 986 356 854
F 000 99C 097

CITROËN
5967 L0
5967 L7
5967 N7
96 094 933
96 099 747

FIAT
9609493380
9619064880

HITACHI
134431

MAGNETI MARELLI
941135160703

PEUGEOT
5967 L0
5967 L7
5967 N7

[03] **Supplied until depletion**
- Fornibile fino ad esaurimento delle scorte
- Fourni jusqu'à épuisement du stock
- Lieferbar solange vorrat reicht
- Suministrado hasta el stock termina

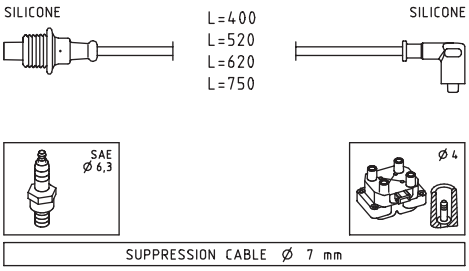

CITROËN		
XANTIA I 1.6 i	BFZ(XU5JP)	03/93 ⇨ 03/01
XANTIA I 1.8 i	LFX(XU7JB), LFZ(XU7JP)	03/93 ⇨ 01/98
BX 16	BDY(XU5M), BDZ(XU5M)	05/89 ⇨ 12/94
BX 16 E	BDY(XU5M), BDZ(XU5M)	05/89 ⇨ 02/93
XSARA 1.8 i	LFX(XU7JB), LFZ(XU7JP)	04/97 ⇨ 09/00
XSARA 1.8 i Aut.	LFZ(XU7JP)	04/97 ⇨ 09/00
EVASION 1.8	LFZ(XU7JP)	05/97 ⇨ 07/02
JUMPER I 2.0	RFW(XU10J2U)	02/94 ⇨ 04/02
JUMPER I 2.0 4x4	RFW(XU10J2U)	08/96 ⇨ 04/02
JUMPER II 2.0	XU10J2	04/02 ⇨
JUMPER II 2.0 bivalent	XU10J2	02/03 ⇨
BERLINGO I 1.8 i	LFX(XU7JB)	05/97 ⇨ 10/02
BERLINGO I 1.8 i 4WD	LFX(XU7JB)	04/97 ⇨ 10/01
XANTIA II 1.6 i SX	BFZ(XU5JP)	01/98 ⇨ 03/01
XANTIA II 1.8 i	LFX(XU7JB)	01/98 ⇨ 04/03
ZX 1.6	BDY(XU5M), BFZ(XU5JP)	07/94 ⇨ 10/97
ZX 1.6 i	BDY(XU5M), BFZ(XU5JP)	03/91 ⇨ 10/97
ZX 1.8	LFZ(XU7JP)	03/91 ⇨ 10/97
ZX 1.8 i	LFZ(XU7JP)	07/92 ⇨ 10/97
ZX 1.9	D6E(XU9JA)	03/91 ⇨ 06/97
ZX 1.9 i	DKZ(XU9JA), XU9JA	03/91 ⇨ 06/97
FIAT		
DUCATO II 2.0	RFL(XU10J2U)	03/94 ⇨
DUCATO II 2.0 4x4	RFL(XU10J2U)	11/94 ⇨ 07/06
DUCATO II 2.0 Bipower	RFL(XU10J2U)	11/02 ⇨
DUCATO II 2.0 Panorama/ Combinato	RFW	03/94 ⇨ 04/02
ULYSSE I 1.8	LFW(XU7JP)	05/97 ⇨ 08/02
PEUGEOT		
205 II 1.6 i	BDZ(XU5M)	01/91 ⇨ 12/94
306 1.8	--, LFZ(XU7JP)	05/93 ⇨ 04/02
306 1.8 ST	LFZ(XU7JP)	06/94 ⇨ 05/01
BOXER I 2.0	RFL(XU10J2U)	04/02 ⇨
BOXER I 2.0 4x4	--	03/96 ⇨ 09/98
BOXER I 2.0 i	RFW(XU10J2)	03/94 ⇨ 04/02
BOXER I 2.0 i 4x4	RFW(XU10J2)	08/96 ⇨ 04/02
309 II 1.6	BDZ(XU5M)	07/89 ⇨ 12/93
405 I 1.6	BDY(XU5M2Z), BDY(XU5M3Z)	07/87 ⇨ 12/92
405 II 1.6	BDY(XU5M2Z), BDY(XU5M3Z), BDZ(XU5M), BFZ(XU5JP)	08/92 ⇨ 05/97
405 II 1.8	LFZ(XU7JP)	08/92 ⇨ 10/96
406 1.6	BFZ(XU5JP)	11/95 ⇨ 05/04
406 1.8	LFX(XU7JB), LFZ(XU7JP)	10/96 ⇨ 03/99
EXPERT I 1.8	L6B(XU7JP), LFZ(XU7JP)	09/96 ⇨
806 1.8	LFW(XU7JP)	07/95 ⇨ 08/02
PARTNER I 1.8	LFX(XU7JB)	03/97 ⇨ 12/02
RANCH 1.8	LFX(XU7JB)	05/97 ⇨

FACET 4.8688 — 07,5

IGNITION CABLE SETS

Adatt./Suitable:

BOSCH
0 986 356 778
0 986 357 237
F 005 X03 945
F 005 X04 028

GENERAL MOTORS
90 384 308
90 384 310
90 443 584
90 443 687

HOLDEN
90443584
90443687

MAGNETI MARELLI
941125310683

OPEL
12 82 077
12 82 078
12 82 079
12 82 080
16 12 552
16 12 561

[03] **Supplied until depletion**
- Fornibile fino ad esaurimento delle scorte
- Fourni jusqu'à épuisement du stock
- Lieferbar solange vorrat reicht
- Suministrado hasta el stock termina

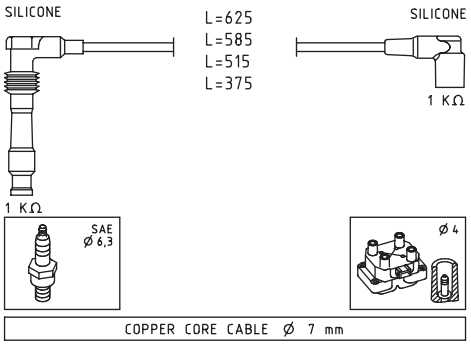

HOLDEN		
BARINA 1.6	X16XE	05/97 ⇨ 08/00
BARINA_SB 1.6i	C16XE, X16XE	04/94 ⇨ 09/98
CALIBRA_YE 2.0i 16V	C20XE	09/91 ⇨ 07/95
OPEL		
ASTRA F 1.6 i 16V	X16XEL	08/94 ⇨ 01/05
ASTRA F 2.0 GSI 16V	C20XE	09/91 ⇨ 01/98
ASTRA F 2.0 i 16V	C20XE	03/93 ⇨ 01/98
CALIBRA A 2.0 i 16V	C20XE	06/90 ⇨ 02/94
CALIBRA A 2.0 i 16V 4x4	C20XE	06/90 ⇨ 02/94
COMBO B 1.4 16V	X14XE	08/99 ⇨ 10/01
CORSA B 1.4 i 16V	C14SEL, X14XE	09/94 ⇨ 12/02
CORSA B 1.6 GSI 16V	C16XE	03/93 ⇨ 09/00
CORSA B 1.6 i 16V	C16SEL, X16XE	09/94 ⇨ 09/00
TIGRA A 1.4 16V	X14XE	07/94 ⇨ 12/00
TIGRA A 1.6 16V	C16SEL, X16XE	07/94 ⇨ 08/98
VECTRA A 2.0 i 16V	20XEJ	02/89 ⇨ 10/90
VECTRA A 2.0 i 16V 4x4	C20XE	08/89 ⇨ 08/95
VECTRA A 2.0 i 16V Cat	C20XE	02/90 ⇨ 11/95
VECTRA A 2000 16V 4x4	20XEJ	01/89 ⇨ 10/90
VECTRA A 2000/GT 16V	20XEJ	01/89 ⇨ 06/94
VECTRA A 2000/GT 16V Cat	C20XE	02/90 ⇨ 11/95
VECTRA A 2000/GT 16V Cat 4x4	C20XE	02/90 ⇨ 11/95
VECTRA B 1.6 i 16V	X16XEL	10/95 ⇨ 07/02
VAUXHALL		
ASTRA III 1.6 i 16V	X16XEL	01/94 ⇨ 09/98
ASTRA III 2.0 i 16V	C20XE	09/91 ⇨ 02/98
CALIBRA 2.0 i 16V	C20XE	06/90 ⇨ 02/94
CALIBRA 2.0 i 16V 4x4	C20XE	06/90 ⇨ 02/94
COMBO B 1.4 16V	X14XE	08/99 ⇨ 10/01
CORSA B 1.4 i 16V	X14XE	09/94 ⇨ 09/00
CORSA B 1.6 GSI 16V	C16XE	03/93 ⇨ 09/00
CORSA B 1.6 i 16V	X16XE	09/94 ⇨ 09/00
TIGRA A 1.4 16V	X14XE	07/94 ⇨ 12/00
TIGRA A 1.6 16V	X16XE	07/94 ⇨ 12/00
VECTRA B 1.6 i 16V	X16XEL	08/95 ⇨ 03/02

FACET 4.8689 — 07,5

IGNITION CABLE SETS

Adatt./Suitable:

BOSCH
0 986 357 125
0 986 357 127
F 005 X03 944

GENERAL MOTORS
90 443 692
90 443 693
90 443 694

HITACHI
134214

HOLDEN
90443692

OPEL
16 12 558
16 12 559
16 12 560

[03] **Supplied until depletion**
- Fornibile fino ad esaurimento delle scorte
- Fourni jusqu'à épuisement du stock
- Lieferbar solange vorrat reicht
- Suministrado hasta el stock termina

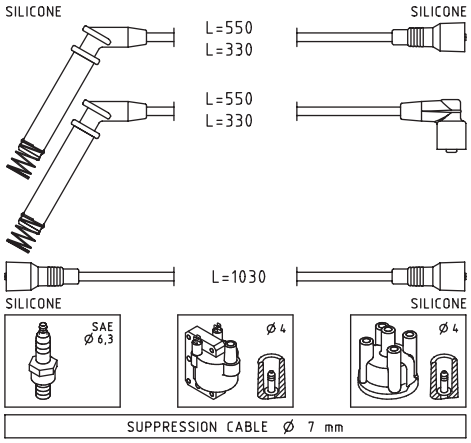

HOLDEN		
CALIBRA_YE 2.0i	C20NE	09/91 ⇨ 07/95
OPEL		
ASTRA F 1.8 i	C18NZ	09/91 ⇨ 09/98
ASTRA F 2.0 i	C20NE	09/91 ⇨ 09/98
CALIBRA A 2.0 i	C20NE	08/89 ⇨ 12/96
CALIBRA A 2.0 i 4x4	C20NE	06/90 ⇨ 07/97
FRONTERA A 2.0 i	C20NE	03/92 ⇨ 10/98
KADETT E 1.8 i	S18NV	06/85 ⇨ 08/91
KADETT E 1.8 S	E18NV	09/87 ⇨ 08/91
KADETT E 2.0 GSI	20NE	09/86 ⇨ 08/91
KADETT E 2.0 GSI Cat	C20NE	09/86 ⇨ 08/91
KADETT E 2.0 i	20NE	10/86 ⇨ 02/93
KADETT E 2.0 i Cat	C20NE	10/86 ⇨ 02/93
OMEGA A 1.8	18SEH, E18NVR, S18NV	09/86 ⇨ 03/94
OMEGA A 1.8 N	18NV	09/86 ⇨ 08/87
OMEGA A 1.8 S	18SV	09/86 ⇨ 03/94
OMEGA A 2.0	20SE, C20NE	09/86 ⇨ 04/94
OMEGA A 2.0 i	C20NE	09/86 ⇨ 04/94
OMEGA B 2.0	20SE	03/94 ⇨ 12/00
VECTRA A 1.8 i	18SV	09/88 ⇨ 10/90
VECTRA A 1.8 i Cat	C18NZ	03/90 ⇨ 11/95
VECTRA A 1.8 S	18SV, E18NVR	09/88 ⇨ 10/90
VECTRA A 1.8 S 4x4	E18NVR	01/89 ⇨ 07/89
VECTRA A 2.0 i	20NE, 20SEH	09/88 ⇨ 09/92
VECTRA A 2.0 i 4x4	20NE, 20SEH	01/89 ⇨ 07/92
VECTRA A 2.0 i Cat	C20NE	09/88 ⇨ 11/95
VECTRA A 2.0 i Cat 4x4	C20NE	01/89 ⇨ 11/95
VECTRA A 2.0 i GT	20SEH	09/88 ⇨ 11/95
VAUXHALL		
ASTRA III 1.8 i	C18NZ	09/91 ⇨ 09/98
ASTRA III 2.0 i	C20NE	09/91 ⇨ 09/98
CALIBRA 2.0 i	C20NE	06/90 ⇨ 07/97
CALIBRA 2.0 i 4x4	C20NE	06/90 ⇨ 07/97
FRONTERA A 2.0	C20NE	04/95 ⇨ 08/98
FRONTERA A 2.0 i	C20NE	03/92 ⇨ 10/98
OMEGA B 2.0	20SE	09/95 ⇨ 09/96

FACET 4.8692 — 07

IGNITION CABLE SETS

Adatt./Suitable:

[00] **Eliminated on 16-09-2019. Please verify the availability through our local distributors**

- Eliminato il 16-09-2019. Verificare la disponibilità presso i nostri distributori
- Eliminé le 16-09-2019. Verifier la disponibilité auprès de nos distributeurs sur place
- Am 16-09-2019 gestrichen. Evtl. Verfügbarkeit bitte bei unseren Händlern prüfen
- Eliminado en fecha 16-09-2019. Verificar la disponibilidad a través de nuestros distribuidores locales

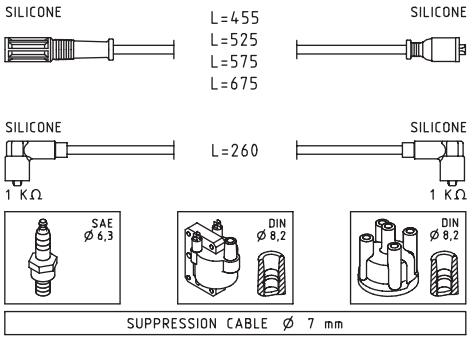

FIAT		
TEMPRA 1.8 4x4	159A4.000	07/92 ⇨ 06/93
TEMPRA 1.8 i.e.	159A4.000, 159A4.046	03/90 ⇨ 08/96
TEMPRA 2.0	159A6.046	04/90 ⇨ 06/93
TEMPRA 2.0 i.e.	159A6.046	10/90 ⇨ 09/96
TEMPRA 2.0 i.e. [BRA]	159A6.011	04/93 ⇨ 12/96
TEMPRA 2.0 i.e. 4x4	159A6.046	03/92 ⇨ 03/95
TIPO I 1.8 i.e.	159A4.000, 159A4.046	10/90 ⇨ 06/93
TIPO I 2.0	159A5.046, 159A6.046	10/90 ⇨ 10/92
TIPO I 2.0 i.e.	159A5.046, 159A6.046	03/90 ⇨ 04/95
TIPO I 2.0 i.e. [BRA]	159A6.011	03/93 ⇨ 10/95
LANCIA		
DEDRA 1.8 i.e.	835A2.000, 835A2.046, 835C5.000	09/89 ⇨ 07/99
DEDRA 2.0 HF Integrale	835A7.046	11/90 ⇨ 07/94
DEDRA 2.0 i.e.	835A5.000, 835A5.046	09/89 ⇨ 07/99
DEDRA 2.0 i.e. Turbo	835A8.046	04/91 ⇨ 07/99
DEDRA 2.0 i.e. Turbo Integrale	835A7.000	04/90 ⇨ 08/91
DEDRA 2.0 Turbo	835A8.000	11/90 ⇨ 06/94

FACET 4.8694 — 07

IGNITION CABLE SETS

Adatt./Suitable:

FIAT
7742005
LANCIA
7742005
MAGNETI MARELLI
941095700609

[03] **Supplied until depletion**

- Fornibile fino ad esaurimento delle scorte
- Fourni jusqu'à épuisement du stock
- Lieferbar solange vorrat reicht
- Suministrado hasta el stock termina

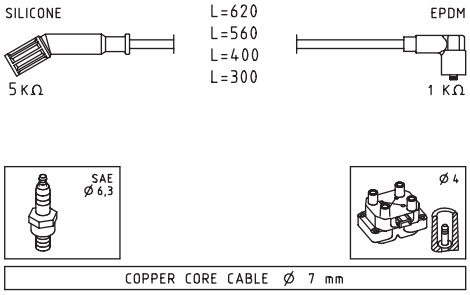

FIAT		
TIPO I 1.1 i.e.	156C.046	10/94 ⇨ 10/95
UNO Mondo 1.0 i.e.	146D8.000	01/96 ⇨
LANCIA		
Y10 1.1 Fire	176B2.000	01/95 ⇨ 12/95
Y10 1.1 Fire Trazione integrale	176B2.000	01/95 ⇨ 12/95
Y10 1.1 i.e. Fire Trazione integrale	156C.046	09/92 ⇨ 12/95

FACET 4.8700 — 07

IGNITION CABLE SETS

Adatt./Suitable:

BOSCH
0 986 356 892
FIAT
7703382
LANCIA
7703382

[00] **Eliminated on 06-07-2020. Please verify the availability through our local distributors**

- Eliminato il 06-07-2020. Verificare la disponibilità presso i nostri distributori
- Eliminé le 06-07-2020. Verifier la disponibilité auprès de nos distributeurs sur place
- Am 06-07-2020 gestrichen. Evtl. Verfügbarkeit bitte bei unseren Händlern prüfen
- Eliminado en fecha 06-07-2020. Verificar la disponibilidad a través de nuestros distribuidores locales

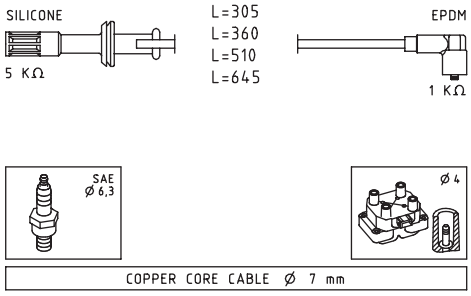

FIAT		
CROMA I 2000 16V	154E1.000	08/92 ⇨ 08/96
CROMA I 2000 i.e. 16V	154E1.027	03/95 ⇨ 12/96
LANCIA		
KAPPA 2.0 16V Turbo	834A4.000	02/95 ⇨ 10/01
THEMA 2000 16V	834F1.000	05/92 ⇨ 07/94
THEMA 2000 16V Turbo	834F2.000	10/92 ⇨ 07/94
THEMA 2000 Turbo 16V	834F2.000	11/92 ⇨ 07/94

FACET 4.8716 — 07

IGNITION CABLE SETS

Adatt./Suitable:

ALFA ROMEO
115 48 05 089 00
60522981
60569567
MAGNETI MARELLI
941044110501

[03] **Supplied until depletion**

- Fornibile fino ad esaurimento delle scorte
- Fourni jusqu'à épuisement du stock
- Lieferbar solange vorrat reicht
- Suministrado hasta el stock termina

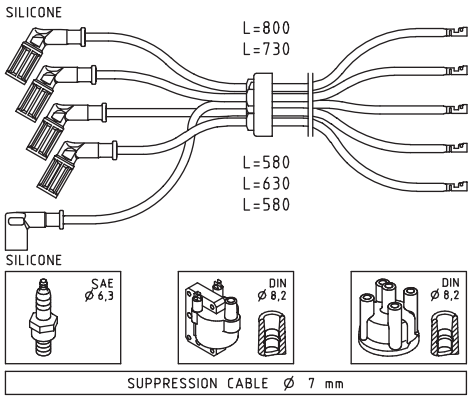

ALFA ROMEO		
75 1.6	AR06100	05/85 ⇨ 09/89
75 1.8	AR06202	09/85 ⇨ 06/89

FACET 4.8725 — 07

IGNITION CABLE SETS

Adatt./Suitable:

[03] **Supplied until depletion**

- Fornibile fino ad esaurimento delle scorte
- Fourni jusqu'à épuisement du stock
- Lieferbar solange vorrat reicht
- Suministrado hasta el stock termina

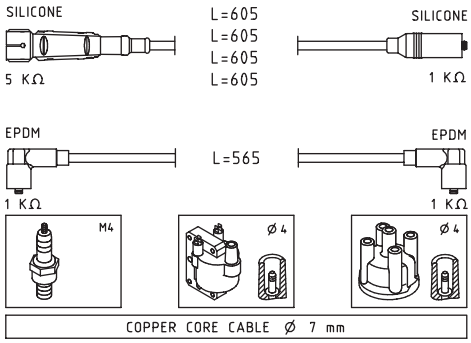

SEAT		
IBIZA II 1.0	AAU	03/93 ⇨ 09/96
IBIZA II 1.3 i	AAV	03/93 ⇨ 08/99
TOLEDO I 1.6 i	ABN, EZ	05/91 ⇨ 03/99
TOLEDO I 1.8 16V	PL	05/91 ⇨ 03/99
TOLEDO I 1.8 i	ABS, ADZ, RP	05/91 ⇨ 12/96
TOLEDO I 2.0 i	2E	05/91 ⇨ 03/99
VW		
JETTA II 1.6	ABN, EZ, EZA, HM, PN, RF	12/83 ⇨ 07/92
JETTA II 1.8	EV, GU, GX, PB, RD, RH, RV	01/84 ⇨ 10/91
JETTA II 1.8 Cat	GX, PF, RP	01/87 ⇨ 10/91
JETTA II 1.8 G60	PG	04/90 ⇨ 07/91
JETTA II 1.8 Syncro	3E82, GU, GX, RH, RP	08/85 ⇨ 07/91
JETTA II 1.8i GT	GZ	12/83 ⇨ 07/88
CADDY I 1.5	JB	08/82 ⇨ 07/83
CADDY I 1.6	EW, HN	01/83 ⇨ 07/92
CADDY I 1.8	JH	08/85 ⇨ 07/92
CORRADO 1.8 G60	PG	09/88 ⇨ 09/93
CORRADO 2.0 i	ADY	04/93 ⇨ 12/95
GOLF I 1.6	EW, HN	08/83 ⇨ 04/92
GOLF I 1.8	2H, DX, EX, JH, KT	08/82 ⇨ 04/93
GOLF II 1.0	GN	11/83 ⇨ 08/85
GOLF II 1.6	ABN, EZ, PN, RF	08/83 ⇨ 12/92
GOLF II 1.6 [CHE] [SWE]	HM	08/83 ⇨ 07/88
GOLF II 1.6 G	EZA, PN	08/86 ⇨ 07/91
GOLF II 1.8	GU, GX, RH, RV	08/84 ⇨ 10/91
GOLF II 1.8 [CHE] [SWE]	HV	04/84 ⇨ 07/87
GOLF II 1.8 GTI	EV, PB, RD	08/83 ⇨ 10/91
GOLF II 1.8 GTI Cat	PF	01/87 ⇨ 10/91
GOLF II 1.8 GTI G60	PG	04/90 ⇨ 07/91
GOLF II 1.8 GTI G60 Syncro	1H, PG	08/88 ⇨ 12/91
GOLF II 1.8 i	RP	08/87 ⇨ 07/91
GOLF II 1.8 i Cat	GX, RP	08/87 ⇨ 10/91
GOLF II 1.8 i Cat Syncro	RP	08/87 ⇨ 10/91
GOLF II 1.8 Rallye syncro	1H, PG	08/88 ⇨ 07/91
GOLF II 1.8 Syncro	3E82, GU, GX, RH	02/86 ⇨ 07/91
GOLF II 1.8i GTI [CHE] [SWE]	GZ	01/84 ⇨ 07/87
GOLF II 1.8i GTI [SWE]	GZ	08/87 ⇨ 07/88
PASSAT III 1.6	1F, ABN, EZ	04/88 ⇨ 07/92
PASSAT III 1.8	AAM, ABS, PB, PF, RP	02/88 ⇨ 05/97
PASSAT III 1.8 G60 Syncro	PG	08/88 ⇨ 05/97
PASSAT III 2.0	2E	02/90 ⇨ 05/97
PASSAT III 2.0 Syncro	2E	03/90 ⇨ 12/96
PASSAT III 2.0i	ACX	08/92 ⇨ 07/93
GOLF III 1.8	AAM, ABS, ADZ	08/91 ⇨ 04/99
GOLF III 1.8 Syncro	ABS	01/93 ⇨ 08/97
SCIROCCO II 1.6	EW, EWA, HN, RE	01/83 ⇨ 07/90
SCIROCCO II 1.8	DX, EX, JH, KT	08/82 ⇨ 07/92
VENTO 1.8	AAM, ABS	11/91 ⇨ 09/98
VENTO 2.0	AKR	11/91 ⇨ 09/98

FACET 4.8727 — 07

IGNITION CABLE SETS

Adatt./Suitable:

[00] **Eliminated on 22-02-2022. Please verify the availability through our local distributors**

- Eliminato il 22-02-2022. Verificare la disponibilità presso i nostri distributori
- Eliminé le 22-02-2022. Verifier la disponibilité auprès de nos distributeurs sur place
- Am 22-02-2022 gestrichen. Evtl. Verfügbarkeit bitte bei unseren Händlern prüfen
- Eliminado en fecha 22-02-2022. Verificar la disponibilidad a través de nuestros distribuidores locales

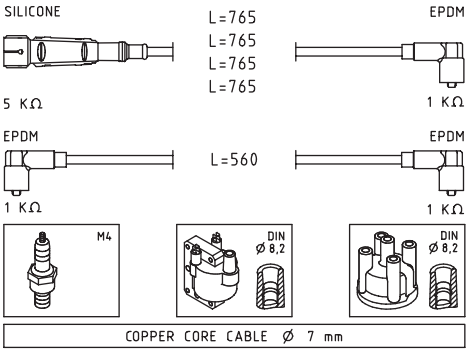

VW		
JETTA II 1.3	GT, HK	01/84 ⇨ 06/87
JETTA II 1.6	EZ, HM	12/83 ⇨ 07/92
JETTA II 1.8	EV, GU, GX	01/84 ⇨ 10/91
JETTA II 1.8 Cat	GX	08/87 ⇨ 10/91
JETTA II 1.8 Syncro	GU	08/87 ⇨ 12/88
JETTA II 1.8i GT	GZ	12/83 ⇨ 07/88
CADDY I 1.5	JB	08/82 ⇨ 07/83
CADDY I 1.6	EW, HN	01/83 ⇨ 07/92
CADDY I 1.8	JH	08/85 ⇨ 07/92
GOLF I 1.3	HK	08/83 ⇨ 07/86
GOLF I 1.6	EW, HN	08/83 ⇨ 04/92
GOLF I 1.8	2H, DX, EX, JH, KT	08/82 ⇨ 04/93
GOLF II 1.0	GN	11/83 ⇨ 08/85
GOLF II 1.3	GT, HK	08/83 ⇨ 06/87
GOLF II 1.6	EZ	08/83 ⇨ 07/92
GOLF II 1.6 [CHE] [SWE]	HM	08/83 ⇨ 07/85
GOLF II 1.8	GU, GX	08/84 ⇨ 10/91
GOLF II 1.8 [CHE] [SWE]	HV	04/84 ⇨ 07/87
GOLF II 1.8 GTI	EV	08/83 ⇨ 10/91
GOLF II 1.8 i Cat	GX	08/87 ⇨ 10/91
GOLF II 1.8i GTI [CHE] [SWE]	GZ	01/84 ⇨ 07/87
GOLF II 1.8i GTI [SWE]	GZ	08/87 ⇨ 07/88
SCIROCCO I 1.1	FA	04/74 ⇨ 07/79
SCIROCCO I 1.3	GF	08/79 ⇨ 07/80
SCIROCCO I 1.5	JB	08/77 ⇨ 07/80
SCIROCCO II 1.3	HK	08/83 ⇨ 07/84
SCIROCCO II 1.6	EW, EWA, HN	01/83 ⇨ 12/89
SCIROCCO II 1.8	DX, EX, JH, KT	08/82 ⇨ 07/92

FACET 4.8736 — 07

IGNITION CABLE SETS

Adatt./Suitable:

[03] **Supplied until depletion**

- Fornibile fino ad esaurimento delle scorte
- Fourni jusqu'à épuisement du stock
- Lieferbar solange vorrat reicht
- Suministrado hasta el stock termina

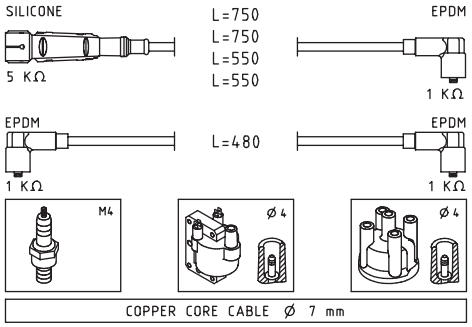

SEAT		
CORDOBA I 1.6 i	ABU	02/93 ⇨ 10/02
VW		
VENTO 1.6	ABU	09/92 ⇨ 09/98

FACET 4.8737 — 08

IGNITION CABLE SETS

Adatt./Suitable:

[03] **Supplied until depletion**

- Fornibile fino ad esaurimento delle scorte
- Fourni jusqu'à épuisement du stock
- Lieferbar solange vorrat reicht
- Suministrado hasta el stock termina

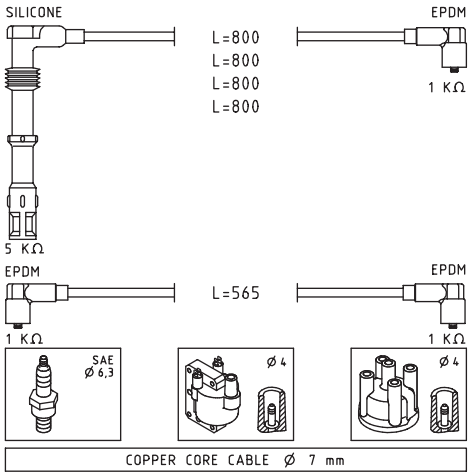

VW		
JETTA II 1.8 16V	KR, PL	08/86 ⇨ 10/91
GOLF II 1.8 GTI 16V	KR, PL	02/86 ⇨ 10/91
SCIROCCO II 1.8 16V	KR, PL	10/85 ⇨ 07/92

FACET 4.8747 — 07,5

IGNITION CABLE SETS

Adatt./Suitable:

BOSCH
0 986 357 128
CITROËN
95 659 596
97 534 955
PEUGEOT
5967 C3
5967 K7

[00] **Eliminated on 22-02-2022. Please verify the availability through our local distributors**

- Eliminato il 22-02-2022. Verificare la disponibilità presso i nostri distributori
- Eliminé le 22-02-2022. Verifier la disponibilité auprès de nos distributeurs sur place
- Am 22-02-2022 gestrichen. Evtl. Verfügbarkeit bitte bei unseren Händlern prüfen
- Eliminado en fecha 22-02-2022. Verificar la disponibilidad a través de nuestros distribuidores locales

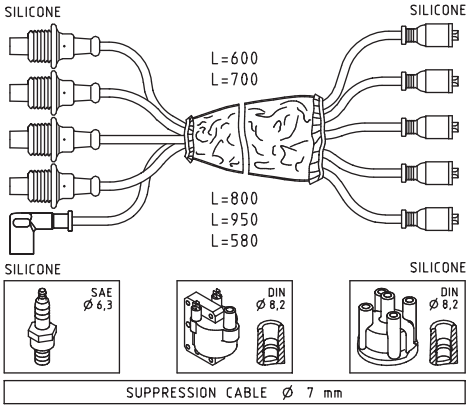

CITROËN		
BX 1.6	182A, B6D, B6E	01/87 ⇨ 12/94
BX 1.9	159C, D6U, DKK	09/85 ⇨ 12/94
BX 1.9 GTi	D6D, D6K	01/87 ⇨ 01/92
BX 16	180Z	03/86 ⇨ 12/94
BX 19	D6A(XU9J2), DKZ(XU9JA)	07/86 ⇨ 12/94
BX 19 Cat	DFZ(XU9J1)	07/86 ⇨ 12/94
BX 19 GTi	D6A(XU9J2), DKZ(XU9JA)	07/86 ⇨ 02/93
BX 19 GTi 4x4	DKZ(XU9JA)	06/88 ⇨ 02/93
PEUGEOT		
205 I 1.6	B1A(XU51C), B1E(XU51C), BAZ(XU5CP)	08/86 ⇨ 10/87
205 I 1.6 GTI	180A(XU5J), B6D(XU5JA), XU5J1	01/83 ⇨ 12/90
205 I 1.9 GTI	DFZ(XU9J1)	03/87 ⇨ 10/87
205 II 1.6	B1A(XU51C), B1E(XU51C), BAZ(XU5CP)	10/87 ⇨ 09/98
205 II 1.6 CTI	180A(XU5J), 180Z(XU5J)	03/86 ⇨ 10/90
205 II 1.6 GTI	180A(XU5J), 180Z(XU5J)	10/87 ⇨ 12/89
205 II 1.9 CTI	DFZ(XU9J1)	10/87 ⇨ 12/94
205 II 1.9 GTI Cat	DFZ(XU9J1)	10/87 ⇨ 07/94
309 I 1.6	--, 180Z(XU5J), B6B(XU5J), XU5JA	11/85 ⇨ 06/89
309 I 1.6 Cat	BAZ(XU5CP)	09/86 ⇨ 12/89
309 I 1.9	D2B(XU9S), DFZ(XU9J1), XU92C	10/85 ⇨ 07/89
309 II 1.6	XU5JA	07/89 ⇨ 12/93
309 II 1.6 GTi	--	09/89 ⇨ 10/93
309 II 1.9	XU92C	07/89 ⇨ 12/93
405 I 1.9	DFZ(XU9J1)	05/88 ⇨ 08/92
405 I 1.9 Injection	DFZ(XU9J1)	07/87 ⇨ 12/92
405 I 1.9 Trazione integrale	DFZ(XU9J1)	09/88 ⇨ 07/92

FACET 4.8748 — 07,5

IGNITION CABLE SETS

Adatt./Suitable:

PEUGEOT
5967 E5
5967 H5
5967 K4

[00] **Eliminated on 01-12-2020. Please verify the availability through our local distributors**

- Eliminato il 01-12-2020. Verificare la disponibilità presso i nostri distributori
- Eliminé le 01-12-2020. Verifier la disponibilité auprès de nos distributeurs sur place
- Am 01-12-2020 gestrichen. Evtl. Verfügbarkeit bitte bei unseren Händlern prüfen
- Eliminado en fecha 01-12-2020. Verificar la disponibilidad a través de nuestros distribuidores locales

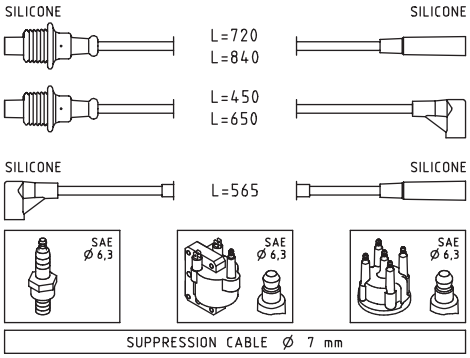

PEUGEOT		
205 I 1.6	B1A(XU51C), B1E(XU51C)	08/86 ⇨ 10/87
205 II 1.6	B1A(XU51C), B1E(XU51C)	10/87 ⇨ 09/98
309 II 1.6	18EM, BDZ(XU5M)	07/89 ⇨ 12/93
309 II 1.9	XU92C	07/89 ⇨ 12/93
405 I 1.6	--, 18EM, B1E(XU51C), BDZ(XU5M)	01/87 ⇨ 12/92
405 I 1.6 4x4	BDZ(XU5M)	04/88 ⇨ 07/92
405 I 1.6 SRi 4x4	BDZ(XU5M)	04/88 ⇨ 07/92
405 I 1.9	D2C(XU92C)	07/87 ⇨ 12/92
405 II 1.6	18EM	08/92 ⇨ 05/97
405 II 1.9	XU92C	01/93 ⇨ 12/96

FACET 4.8768 — 07

IGNITION CABLE SETS

Adatt./Suitable:

[00] **Eliminated on 21-01-2020. Please verify the availability through our local distributors**

- Eliminato il 21-01-2020. Verificare la disponibilità presso i nostri distributori
- Eliminé le 21-01-2020. Verifier la disponibilité auprès de nos distributeurs sur place
- Am 21-01-2020 gestrichen. Evtl. Verfügbarkeit bitte bei unseren Händlern prüfen
- Eliminado en fecha 21-01-2020. Verificar la disponibilidad a través de nuestros distribuidores locales

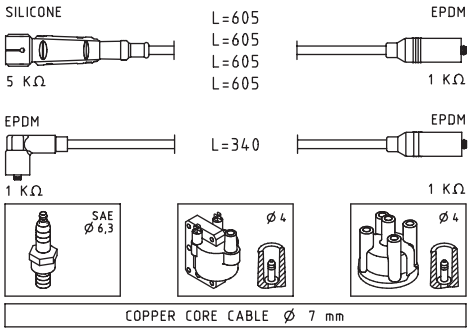

AUDI		
80 II 1.3	EP	09/78 ⇨ 07/86
80 II 1.6	DT, JU, SA, WV	08/78 ⇨ 03/87
80 II 1.8	DS, JN, SF	01/83 ⇨ 08/86
80 II 1.8 CC quattro	JN, JV	08/84 ⇨ 08/86

AUDI		
80 II 1.8 GTE	DZ, MU, PV	06/84 ⇨ 03/87
80 III 1.4	SE	08/86 ⇨ 07/88
80 III 1.6	ABB, PP, RN, RNA	09/86 ⇨ 10/91
80 III 1.8	RU, SD	09/86 ⇨ 01/90
80 III 1.8 E	DZ	06/86 ⇨ 08/91
80 III 1.8 E quattro	DZ	09/86 ⇨ 08/91
80 III 1.8 quattro	SD	09/86 ⇨ 08/90
80 III 1.8 S	JN, JV, NE, PM, SF	08/86 ⇨ 10/91
80 III 1.8 S quattro	JN, NE, PM, SF	09/86 ⇨ 09/91
80 III 2.0	AAD	10/90 ⇨ 08/91
80 III 2.0 E	3A	08/88 ⇨ 10/90
80 III 2.0 E quattro	3A	08/88 ⇨ 09/90
80 III 2.0 quattro	3A, AAD	08/88 ⇨ 08/91
80 IV 1.6	ABB, ABM	09/91 ⇨ 12/94
80 IV 1.6 E	ADA	06/93 ⇨ 01/96
80 IV 2.0	ABT	09/91 ⇨ 01/96
80 IV 2.0 E	ABK	09/91 ⇨ 01/96
80 IV 2.0 E quattro	ABK	09/91 ⇨ 12/94
80 IV 2.0 quattro	ADW	11/93 ⇨ 01/96
90 I 1.8	JN	06/84 ⇨ 03/87
100 III 1.8	DS, JW, NP, SH	08/83 ⇨ 12/90
100 III 1.8 Cat	4B, PH	03/85 ⇨ 11/90
100 III 1.8 Cat quattro	4B, PH	08/85 ⇨ 11/90
100 III 1.8 quattro	NP, SH	10/84 ⇨ 07/90
100 IV 1.6	ABB	03/92 ⇨ 07/93
100 IV 2.0	AAE	12/90 ⇨ 07/94
100 IV 2.0 E	AAD, AAE, ABK	12/90 ⇨ 07/94
100 IV 2.0 E quattro	AAD	12/90 ⇨ 07/92
A6 I 2.0	AAE, ABK, ADW	06/94 ⇨ 12/97
A4 I RS4 quattro	AZR	05/00 ⇨ 09/01
CABRIOLET 2.0 E	ABK	01/93 ⇨ 07/98
COUPE 1.8	DZ	08/89 ⇨ 07/91
COUPE 2.0	3A, AAD, ABK	05/89 ⇨ 12/96

FACET 4.8780 — 07

IGNITION CABLE SETS

Adatt./Suitable:

BOSCH
0 986 356 889
HITACHI
134471
MAGNETI MARELLI
941135120700
PEUGEOT
5967 K6

[03] **Supplied until depletion**

- Fornibile fino ad esaurimento delle scorte
- Fourni jusqu'à épuisement du stock
- Lieferbar solange vorrat reicht
- Suministrado hasta el stock termina

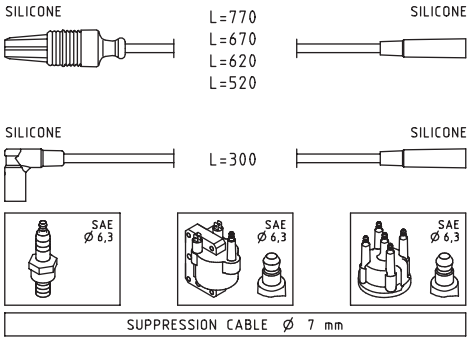

PEUGEOT		
106 I 1.0	TU9	09/91 ⇨ 03/01
106 I 1.1	H1B(TU1), HDZ(TU1M)	08/91 ⇨ 04/96
106 I 1.4	K5A(TU3), KDY(TU3M), TU3, TU3.2	08/91 ⇨ 04/96
106 II 1.1	H1B(TU1)	04/96 ⇨
205 I 1.4	TU3	01/83 ⇨ 12/90
205 II 1.0	TU9	10/87 ⇨ 09/98
205 II 1.1	H1B(TU1), HDZ(TU1M)	10/87 ⇨ 09/98
205 II 1.1 CJ	HDZ(TU1M)	10/89 ⇨ 12/94
205 II 1.4	K1D(TU3A), K2B(TU3S), KDY(TU3M), KDZ(TU3M)	06/87 ⇨ 09/98
205 II 1.4 Cat	KAY(TU3CP)	08/87 ⇨ 09/93
205 II 1.4 CJ	K1D(TU3A), KDY(TU3M), KDZ(TU3M)	03/89 ⇨ 12/94
205 II 1.4 CJ Cat	KAY(TU3CP)	01/89 ⇨ 09/93
306 I 1.4	TU3	01/93 ⇨ 04/02
309 I 1.4	K1D(TU3A), K2B(TU3S), KDY(TU3M), KDZ(TU3M)	08/88 ⇨ 08/89
309 II 1.1	H1B(TU1), HDZ(TU1M)	09/89 ⇨ 12/93
309 II 1.4	KDZ(TU3M), TU3, TU3F2	07/89 ⇨ 12/93
405 I 1.4	K5A(TU3), TU3A, TU3F2	01/87 ⇨ 12/92
405 II 1.4	TU3F2	01/93 ⇨ 12/96
RANCH 1.4	K5A(TU3.2)	09/96 ⇨ 08/02

FACET 4.8801 — 07,5

IGNITION CABLE SETS

Adatt./Suitable:

[03] **Supplied until depletion**

- Fornibile fino ad esaurimento delle scorte
- Fourni jusqu'à épuisement du stock
- Lieferbar solange vorrat reicht
- Suministrado hasta el stock termina

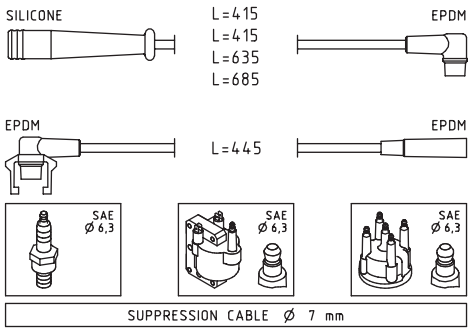

RENAULT		
19 I 1.2i	E7F	01/89 ⇨ 12/92
19 I 1.4	E6J700, E6J701, E7J700	01/88 ⇨ 12/92
19 II 1.2	E7F730	05/92 ⇨ 09/94
19 II 1.4	E6J706, E7J706, E7J707, E7J742, E7J745	01/92 ⇨ 12/95
CLIO I 1.2	E5F710, E5F716, E7F700, E7F706, E7F708, E7F750	05/90 ⇨ 09/98
CLIO I 1.4	E6J712, E6J713, E6J718, E7J601, E7J710, E7J711, E7J716, E7J718, E7J719, E7J754, E7J756, E7J757	01/90 ⇨ 09/98
EXPRESS 1.4	E6J/E7J	01/85 ⇨ 10/90
MEGANE I 1.4	E7J764	09/96 ⇨ 08/03
MEGANE I 1.4 e	E7J764	01/96 ⇨ 08/03
MEGANE I 1.4 Eco	E7J624	01/96 ⇨ 03/99
MEGANE SCÉNIC I 1.4 i	E7J764	01/97 ⇨ 09/99
RAPID 1.4	E6J738, E7J720, E7J724, E7J726, E7J728, E7J770, E7J771, E7J773	09/91 ⇨ 03/98
RAPID 1.4 RN	E6J734	09/91 ⇨ 08/93

FACET 4.8802 — 08

IGNITION CABLE SETS

Adatt./Suitable:

[03] **Supplied until depletion**

- Fornibile fino ad esaurimento delle scorte
- Fourni jusqu'à épuisement du stock
- Lieferbar solange vorrat reicht
- Suministrado hasta el stock termina

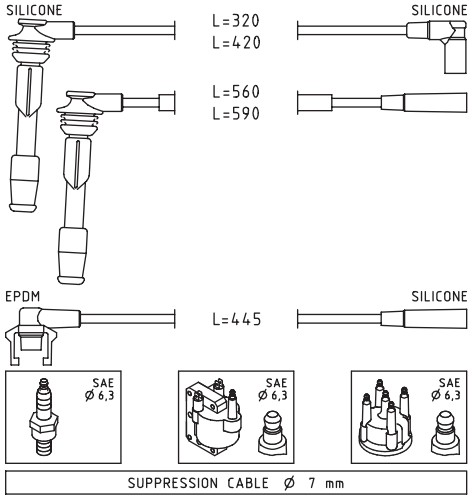

RENAULT		
19 I 1.8 16V	F7P700, F7P704	06/89 ⇨ 09/92
19 II 1.8 16V	F7P704	04/92 ⇨ 06/96
CLIO I 1.8 16V	F7P720, F7P722	01/91 ⇨ 03/96
CLIO I Williams	F7R700	01/94 ⇨ 09/98

FACET 4.8808 — 07

IGNITION CABLE SETS

Adatt./Suitable:

[00] **Eliminated on 28-06-2021. Please verify the availability through our local distributors**

- Eliminato il 28-06-2021. Verificare la disponibilità presso i nostri distributori
- Eliminé le 28-06-2021. Verifier la disponibilité auprès de nos distributeurs sur place
- Am 28-06-2021 gestrichen. Evtl. Verfügbarkeit bitte bei unseren Händlern prüfen
- Eliminado en fecha 28-06-2021. Verificar la disponibilidad a través de nuestros distribuidores locales

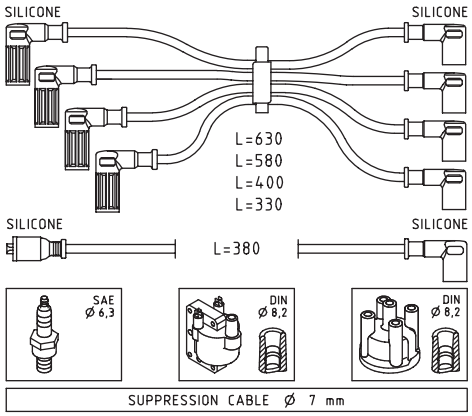

FIAT		
TEMPRA 1.4 i.e.	160A1.046	04/90 ⇨ 08/96
TEMPRA 1.6	159A3.000, 159A3.048, 159A3.098	03/90 ⇨ 12/96
TEMPRA 1.6 i.e.	159A3.046, 159A3.048	06/90 ⇨ 08/96
TIPO I 1.4	160A1.048	07/87 ⇨ 12/89
TIPO I 1.4 i.e.	160A1.046	05/89 ⇨ 04/95
TIPO I 1.6	159A3.048, 160A2.000	01/88 ⇨ 10/95
TIPO I 1.6 i.e.	159A3.046, 159A3.048	07/90 ⇨ 04/95
TIPO I 1.6 SX DGT	159A3.000	05/89 ⇨ 10/95
UNO 1.4 Super	146C2.028	09/89 ⇨ 09/92
UNO 70 i.e. 1.4	146C1.000, 160A1.046	09/89 ⇨ 07/96
UNO 70 S 1.4	160A1.048	10/88 ⇨ 06/06
UNO 75 i.e. 1.5	149C1.000	10/85 ⇨ 12/93
UNO Mondo 1.4 Super	146C2.028	01/96 ⇨

FACET 4.8815 — 07

IGNITION CABLE SETS

Adatt./Suitable:

[00] **Eliminated on 21-12-2020. Please verify the availability through our local distributors**

- Eliminato il 21-12-2020. Verificare la disponibilità presso i nostri distributori
- Eliminé le 21-12-2020. Verifier la disponibilité auprès de nos distributeurs sur place
- Am 21-12-2020 gestrichen. Evtl. Verfügbarkeit bitte bei unseren Händlern prüfen
- Eliminado en fecha 21-12-2020. Verificar la disponibilidad a través de nuestros distribuidores locales

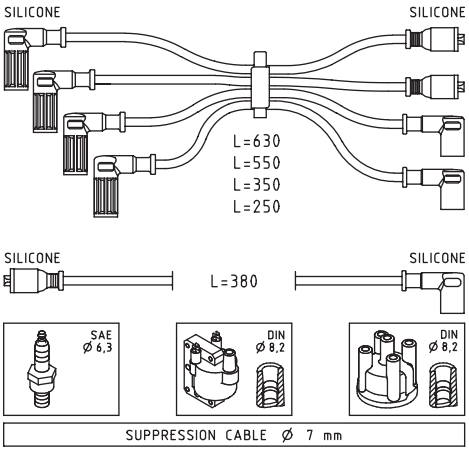

FIAT		
TEMPRA 1.4 i.e.	160A1.046	04/90 ⇨ 08/96
TEMPRA 1.6	159A3.000, 159A3.048, 159A3.098	03/90 ⇨ 12/96
TEMPRA 1.6 i.e.	159A3.046, 159A3.048	06/90 ⇨ 08/96
TIPO I 1.4 i.e.	160A1.046	05/89 ⇨ 04/95
TIPO I 1.6	159A3.048	03/93 ⇨ 10/95
TIPO I 1.6 i.e.	159A3.046, 159A3.048	07/90 ⇨ 04/95
TIPO I 1.6 SX DGT	159A3.000	05/89 ⇨ 10/95

FACET 4.8839 — 07

IGNITION CABLE SETS

Adatt./Suitable:

[00] **Eliminated on 29-07-2019. Please verify the availability through our local distributors**

- Eliminato il 29-07-2019. Verificare la disponibilità presso i nostri distributori
- Eliminé le 29-07-2019. Verifier la disponibilité auprès de nos distributeurs sur place
- Am 29-07-2019 gestrichen. Evtl. Verfügbarkeit bitte bei unseren Händlern prüfen
- Eliminado en fecha 29-07-2019. Verificar la disponibilidad a través de nuestros distribuidores locales

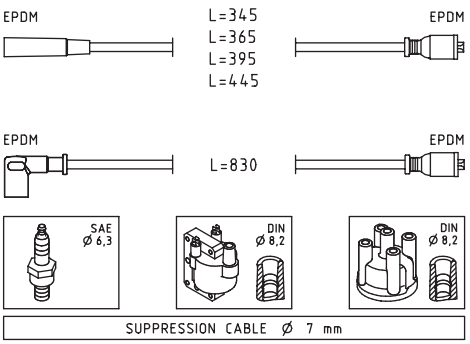

RENAULT		
9 1.2	C1G700, C1G710	09/85 ⇨ 12/88
11 1.2	C1G700, C1G710	10/84 ⇨ 12/88
11 1.4	C2J720, C2J766, C2J767, C2J768	03/83 ⇨ 12/88
EXPRESS 1.1	C1E	01/85 ⇨ 10/90
EXPRESS 955	C1C	01/85 ⇨ 10/90
RAPID 1.0	C1C706	09/85 ⇨ 05/92
RAPID 1.1	C1E750, C1E752, C1E754, C1E756, C1E760, C1E762, C1E764, C1E792	07/85 ⇨ 10/97
SUPER 5 1.0	C1C700	10/84 ⇨ 10/88
SUPER 5 1.1	C1E750, C1E752, C1E754, C1E756, C1E760	10/84 ⇨ 12/96

FACET 4.8846 — 08

IGNITION CABLE SETS

Adatt./Suitable:

PEUGEOT
5967 79
5967 84

[03] **Supplied until depletion**

- Fornibile fino ad esaurimento delle scorte
- Fourni jusqu'à épuisement du stock
- Lieferbar solange vorrat reicht
- Suministrado hasta el stock termina

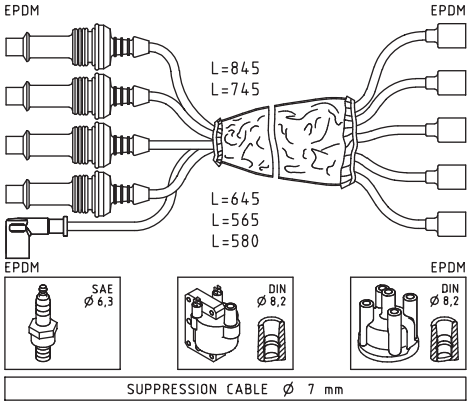

PEUGEOT		
205 I 1.1	109F(XW7), 109N(XW7)	02/83 ⇨ 10/87
205 I 1.4	150(XY6B), 150B(XY8), 150D(XY7), 150G(XY7), 150H(XY8)	02/83 ⇨ 10/87
205 II 1.4	150G(XY7), 150H(XY8)	10/87 ⇨ 05/89
205 II 1.4 CJ	150D(XY7), 150G(XY7)	03/88 ⇨ 05/89
205 II 1.4 CT	150B(XY8), 150H(XY8)	04/86 ⇨ 12/88

FACET 4.8864 — 07

IGNITION CABLE SETS

Adatt./Suitable:

[00] **Eliminated on 11-11-2019. Please verify the availability through our local distributors**

- Eliminato il 11-11-2019. Verificare la disponibilità presso i nostri distributori
- Eliminé le 11-11-2019. Verifier la disponibilité auprès de nos distributeurs sur place
- Am 11-11-2019 gestrichen. Evtl. Verfügbarkeit bitte bei unseren Händlern prüfen
- Eliminado en fecha 11-11-2019. Verificar la disponibilidad a través de nuestros distribuidores locales

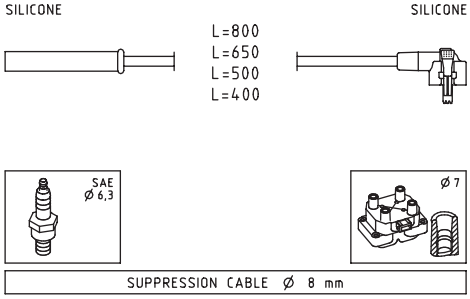

FORD		
ESCORT IV 1.4	F4B, F6F, F6G	07/90 ⇨ 08/00
ESCORT V 1.4	F4B, F6F, F6G, FUH	07/90 ⇨ 01/95

FORD		
ESCORT V 1.4 i	F4B	07/93 ⇨ 01/95
ESCORT V 1.6	LJF, LUJ, LUK	07/90 ⇨ 08/93
ESCORT VI 1.4	F4B	01/95 ⇨ 12/99
FIESTA III 1.4	FUG, FUJ	03/89 ⇨ 12/95
FIESTA III 1.4 Cat	F4A	03/89 ⇨ 12/95
FIESTA III 1.6	LUH	01/89 ⇨ 01/94
ORION II 1.4	F6F, F6G, HL14L-FUH	07/90 ⇨ 12/93
ORION II 1.6	LUJ, LUK	07/90 ⇨ 12/92
ORION II 1.6 i	HL16EFI-LJE, LJF	07/90 ⇨ 09/92

FACET 4.8884 — 07

IGNITION CABLE SETS

Adatt./Suitable:

BOSCH
0 986 357 241
HITACHI
134242
MAZDA
FP13-18-140A
FP13-18-140B
FS01-18-140

[00] **Eliminated on 22-02-2022. Please verify the availability through our local distributors**
- Eliminato il 22-02-2022. Verificare la disponibilità presso i nostri distributori
- Eliminé le 22-02-2022. Verifier la disponibilité auprès de nos distributeurs sur place
- Am 22-02-2022 gestrichen. Evtl. Verfügbarkeit bitte bei unseren Händlern prüfen
- Eliminado en fecha 22-02-2022. Verificar la disponibilidad a través de nuestros distribuidores locales

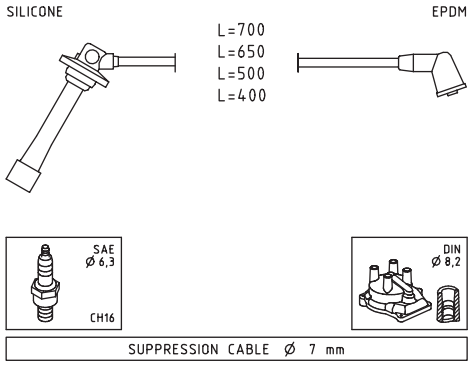

MAZDA		
626 V 1.8	FP, FP01LP	08/91 ⇨ 04/97
626 V 1.8 i	--, FP	08/91 ⇨ 06/97
626 V 2.0 i	FS	08/91 ⇨ 04/97
626 V 2.0 i 4WD	FS	04/92 ⇨ 04/97
MX-6 2.0	FS	02/92 ⇨ 02/97

FACET 4.8887 — 07

IGNITION CABLE SETS

Adatt./Suitable:

BOSCH
0 986 356 733
FIAT
7745367

[03] **Supplied until depletion**
- Fornibile fino ad esaurimento delle scorte
- Fourni jusqu'à épuisement du stock
- Lieferbar solange vorrat reicht
- Suministrado hasta el stock termina

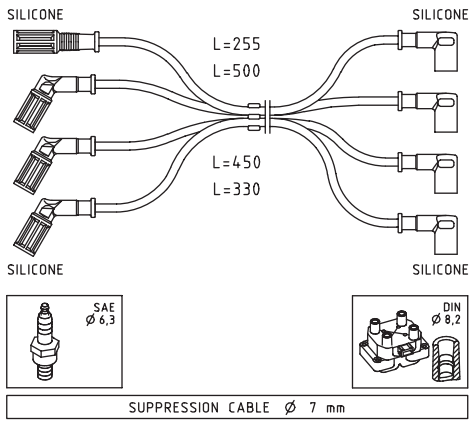

FIAT		
PANDA I 1.1	156C.046	05/91 ⇨ 03/95
PANDA I 1000 i.e	156A2.246	08/92 ⇨ 02/04
PANDA I 1000 i.e. Cat	156A2.246	10/87 ⇨ 08/98
PANDA I 1100	156C.046	05/91 ⇨ 12/99
PANDA I 1100 Trekking 4x4	156C.046	10/91 ⇨ 07/04

FACET 4.8888 — 07

IGNITION CABLE SETS

Adatt./Suitable:

BOSCH
0 986 356 738
FIAT
7785350
LANCIA
7785350
MAGNETI MARELLI
941095870625

[03] **Supplied until depletion**
- Fornibile fino ad esaurimento delle scorte
- Fourni jusqu'à épuisement du stock
- Lieferbar solange vorrat reicht
- Suministrado hasta el stock termina

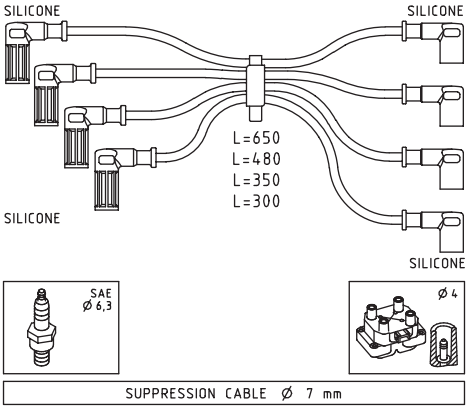

FIAT		
PUNTO I 1.6	176A9.000	01/94 ⇨ 04/97
PUNTO I 90 1.6	176A9.000	04/94 ⇨ 04/97
TEMPRA 1.6 i.e.	159B9.000	06/94 ⇨ 08/96
LANCIA		
DEDRA 1.6	159B9.000	10/94 ⇨ 07/99
DEDRA 1.6 LE Cat	159B9.000	07/94 ⇨ 07/99

FACET 4.8889 — 07

IGNITION CABLE SETS

Adatt./Suitable:

FIAT
7787458
LANCIA
7787458

[00] **Eliminated on 14-04-2020. Please verify the availability through our local distributors**
- Eliminato il 14-04-2020. Verificare la disponibilità presso i nostri distributori
- Eliminé le 14-04-2020. Verifier la disponibilité auprès de nos distributeurs sur place
- Am 14-04-2020 gestrichen. Evtl. Verfügbarkeit bitte bei unseren Händlern prüfen
- Eliminado en fecha 14-04-2020. Verificar la disponibilidad a través de nuestros distribuidores locales

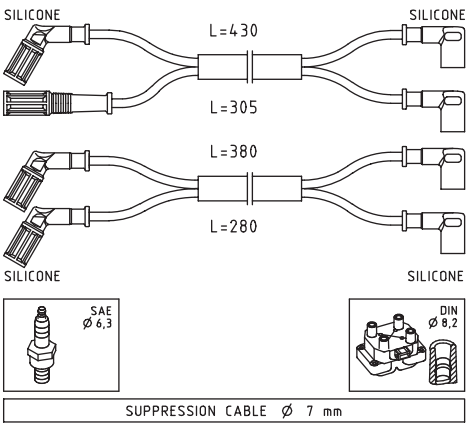

FIAT		
TEMPRA 1.8 i.e.	835C2.000, 835C4.000, 836A5.000	09/93 ⇨ 08/96
TIPO I 1.8 i.e	836A5.000	03/93 ⇨ 04/95
TIPO I 1.8 i.e.	835C2.000, 835C4.000, 836A5.000, 836A6.000	03/93 ⇨ 10/95
LANCIA		
DEDRA 1.8 i.e.	836A5.000	07/94 ⇨ 07/99
DELTA II 1.8 i.e.	835C2.000, 835C4.000, 836A5.000, 836A6.000, 836C4.000	06/93 ⇨ 08/99

FACET 4.8900 — 07

IGNITION CABLE SETS

Adatt./Suitable:

[00] **Eliminated on 13-09-2021. Please verify the availability through our local distributors**
- Eliminato il 13-09-2021. Verificare la disponibilità presso i nostri distributori
- Eliminé le 13-09-2021. Verifier la disponibilité auprès de nos distributeurs sur place
- Am 13-09-2021 gestrichen. Evtl. Verfügbarkeit bitte bei unseren Händlern prüfen
- Eliminado en fecha 13-09-2021. Verificar la disponibilidad a través de nuestros distribuidores locales

[03] **Supplied until depletion**
- Fornibile fino ad esaurimento delle scorte
- Fourni jusqu'à épuisement du stock
- Lieferbar solange vorrat reicht
- Suministrado hasta el stock termina

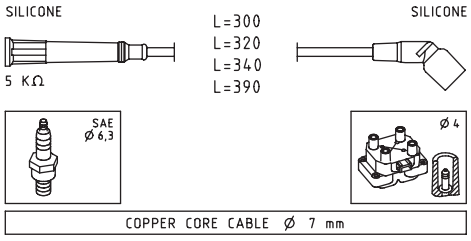

BMW		
3 III 316 g	M43B16(164E2)	02/96 ⇨ 08/00
3 III 316 i	M43B16(164E2), M43B19(194E1)	09/93 ⇨ 08/00
3 III 318 i	M43B18(184E2)	09/93 ⇨ 11/99
Z3 1.8 i	M43B18(184E2)	10/95 ⇨ 10/98
Z3 1.9 i	M43B19(194E1)	07/98 ⇨ 01/03

FACET 4.8920 — 07

IGNITION CABLE SETS

Adatt./Suitable:

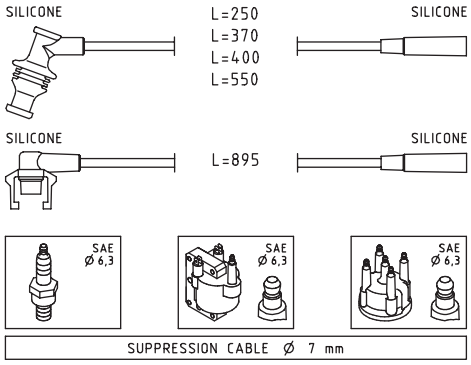

RENAULT		
LAGUNA I 1.8	F3P678, F3P720, F3P724	11/93 ⇨ 03/01
LAGUNA I 2.0	6Z7U730, F3R722	11/93 ⇨ 03/01

FACET 4.8956 — 07,5

IGNITION CABLE SETS

Adatt./Suitable:

GENERAL MOTORS
90 350 560
OPEL
16 12 512

[00] Eliminated on 14-04-2020. Please verify the availability through our local distributors

- Eliminato il 14-04-2020. Verificare la disponibilità presso i nostri distributori
- Eliminé le 14-04-2020. Verifier la disponibilité auprès de nos distributeurs sur place
- Am 14-04-2020 gestrichen. Evtl. Verfügbarkeit bitte bei unseren Händlern prüfen
- Eliminado en fecha 14-04-2020. Verificar la disponibilidad a través de nuestros distribuidores locales

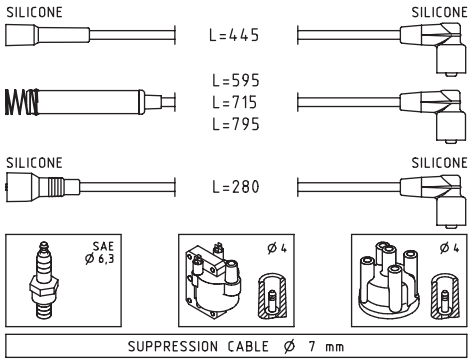

OPEL		
VECTRA A 1.4 S	14NV	04/88 ⇨ 06/92

FACET 4.8965 — 07

IGNITION CABLE SETS

Adatt./Suitable:

[03] Supplied until depletion

- Fornibile fino ad esaurimento delle scorte
- Fourni jusqu'à épuisement du stock
- Lieferbar solange vorrat reicht
- Suministrado hasta el stock termina

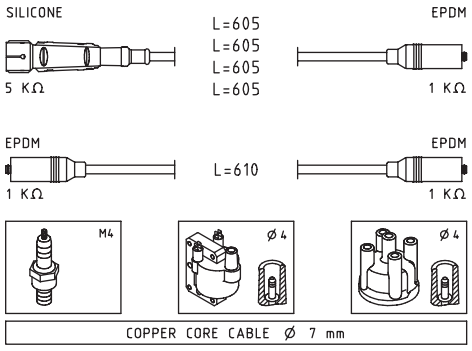

SEAT		
CORDOBA I 1.6 i	1F	05/94 ⇨ 06/99
CORDOBA I 1.8 i	ABS, ACC, ADZ	02/93 ⇨ 09/02
CORDOBA I 2.0 i	2E, AGG	02/93 ⇨ 06/99
IBIZA II 1.6 i	1F	09/94 ⇨ 06/99
IBIZA II 1.8 i	ABS, ACC, ADZ	03/93 ⇨ 08/99
IBIZA II 2.0 i	2E, AGG	03/93 ⇨ 08/99
INCA 1.6 i	1F	11/95 ⇨ 05/98
TOLEDO I 1.6 i	1F, ABN, EZ	05/91 ⇨ 03/99
TOLEDO I 1.8 i	ABS, RP	05/91 ⇨ 12/96
TOLEDO I 2.0 i	2E, AGG	05/91 ⇨ 03/99

VW		
CADDY II 1.6	1F	11/95 ⇨ 05/97
CADDY II 75 1.6	1F	11/95 ⇨ 05/97
CORRADO 2.0 i	2E	04/93 ⇨ 12/95
GOLF III 1.8	AAM	07/93 ⇨ 05/98
GOLF III 2.0	2E	11/91 ⇨ 04/99
PASSAT III 1.8	AAM, ABS, ADZ	02/88 ⇨ 05/97
PASSAT III 2.0	2E, ADY, AEP, AGG	02/90 ⇨ 05/97
PASSAT III 2.0 Syncro	2E, ADY, AGG	03/90 ⇨ 12/96
POLO III 75 1.6	1F	11/95 ⇨ 09/97

VW		
VENTO 2.0	2E	11/91 ⇨ 09/98

FACET 4.9007 — 07,5

IGNITION CABLE SETS

Adatt./Suitable:

[03] Supplied until depletion

- Fornibile fino ad esaurimento delle scorte
- Fourni jusqu'à épuisement du stock
- Lieferbar solange vorrat reicht
- Suministrado hasta el stock termina

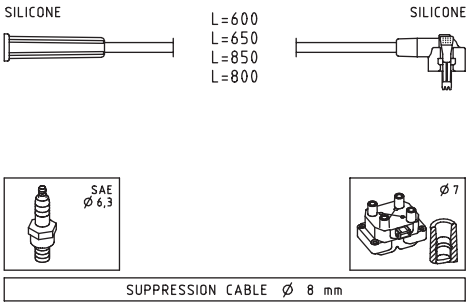

FORD		
FIESTA III 1.0	TLB	03/89 ⇨ 12/95
FIESTA III 1.1	G6A, GUD, GUE	03/89 ⇨ 12/95
FIESTA III 1.3	J6B, JBB, JBC	03/89 ⇨ 02/96
FIESTA III 1.3 Cat	J6B	05/91 ⇨ 01/97
ESCORT IV 1.1	GSG	12/85 ⇨ 07/90
ESCORT V 1.3	J6A, JBE	07/90 ⇨ 01/95
ESCORT VI 1.3	BL13H-JBE, J6A	01/95 ⇨ 02/99
ESCORT III 1.1	GSG	05/86 ⇨ 07/90
ORION II 1.3	BL13H-JBE, J4B, J6A	07/90 ⇨ 12/94

FACET 4.9025 — 07

IGNITION CABLE SETS

Adatt./Suitable:

BOSCH
0 986 357 240
CITROËN
5967 L9
MAGNETI MARELLI
941135130701
PEUGEOT
5967 L9

[03] Supplied until depletion

- Fornibile fino ad esaurimento delle scorte
- Fourni jusqu'à épuisement du stock
- Lieferbar solange vorrat reicht
- Suministrado hasta el stock termina

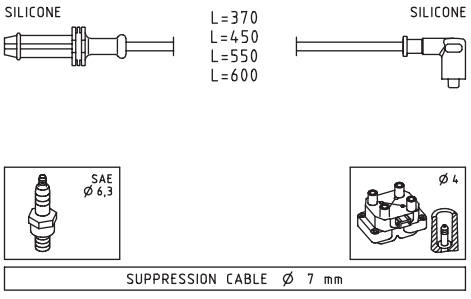

PEUGEOT		
106 I 1.4 i	TU3FJ, TU3FMC	01/91 ⇨ 12/96
306 I 1.1	HDZ(TU1M)	05/93 ⇨ 05/01
306 I 1.4	KDX(TU3MC)	04/93 ⇨ 07/01
306 I 1.4 SL	KDX(TU3MC)	06/94 ⇨ 05/01
306 I 1.6	NFZ(TU5JP)	05/93 ⇨ 10/00
306 I 1.6 SR	NFZ(TU5JP)	06/94 ⇨ 10/00
405 II 1.4	TU3FM	01/93 ⇨ 12/96

FACET 4.9078 — 07

IGNITION CABLE SETS

Adatt./Suitable:

[03] Supplied until depletion

- Fornibile fino ad esaurimento delle scorte
- Fourni jusqu'à épuisement du stock
- Lieferbar solange vorrat reicht
- Suministrado hasta el stock termina

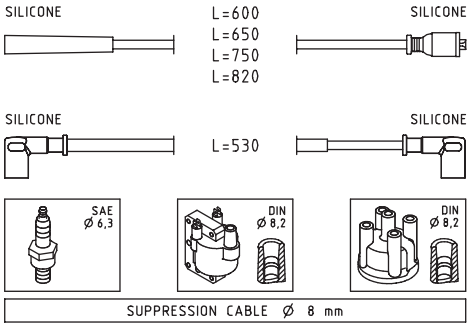

FORD		
CORTINA 1300	KL13H	10/70 ⇨ 03/72
GRANADA 1.7	TV17LC	08/77 ⇨ 05/82
GRANADA 2.0	NEP	08/79 ⇨ 08/85
P 100 1.6	LCR	04/82 ⇨ 09/87
P 100 2.0	NAE	10/87 ⇨ 12/92
SCORPIO I 1.8	REC	04/85 ⇨ 02/92
SCORPIO I 2.0	TL20H-NE4, TL20H-NER	10/84 ⇨ 02/90
SCORPIO I 2.0 i	NRA, NRI	04/85 ⇨ 02/92
SIERRA I 1.3	JCT	08/82 ⇨ 12/86
TRANSIT II 1.6	LAC, LAT	09/85 ⇨ 09/92
TRANSIT II 2.0	N6TS, NAT, NAV, NAW	09/85 ⇨ 09/92
TRANSIT II 2.0 Cat	N6T	11/85 ⇨ 09/92
TRANSIT II 2.0 L	NAW, NAX	10/85 ⇨ 03/91

FACET 4.9138 — 07

IGNITION CABLE SETS

Adatt./Suitable:

BOSCH
0 986 357 161
SAAB
88 17 520

[00] Eliminated on 14-04-2020. Please verify the availability through our local distributors

- Eliminato il 14-04-2020. Verificare la disponibilità presso i nostri distributori
- Eliminé le 14-04-2020. Verifier la disponibilité auprès de nos distributeurs sur place
- Am 14-04-2020 gestrichen. Evtl. Verfügbarkeit bitte bei unseren Händlern prüfen
- Eliminado en fecha 14-04-2020. Verificar la disponibilidad a través de nuestros distribuidores locales

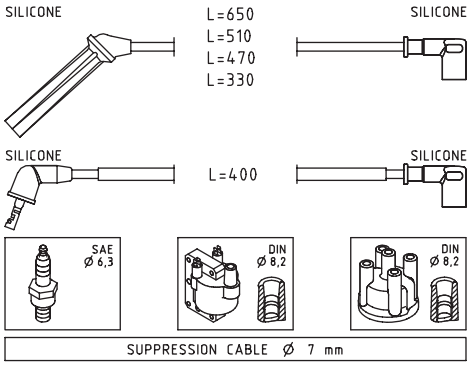

SAAB		
900 I 2.0 -16	5B6304GS, B202XI	01/86 ⇨ 12/93
900 I 2.0 Turbo-16	B202L, B202XL	11/85 ⇨ 06/94
900 I 2.0 Turbo-16 S	B202XL	02/84 ⇨ 12/88
900 I 2.0 Turbo-16 S Cat	B202XL	01/89 ⇨ 12/93
9000 2.0 -16	5B6304GS, B202XI	12/85 ⇨ 01/93
9000 2.0 -16 CS	5B6304GS	01/89 ⇨ 12/98
9000 2.0 -16 Turbo	B202XL	09/84 ⇨ 08/93
9000 2.0 -16 Turbo CD	B202XL	09/88 ⇨ 08/93

SAAB		
9000 2.3 -16 CD	B234I	08/89 ⇨ 12/98
9000 2.3 -16 CS	B234I	09/89 ⇨ 12/98

FACET 4.9140 — 07

IGNITION CABLE SETS

Adatt./Suitable:

SAAB
93 37 346

[00] Eliminated on 22-02-2022. Please verify the availability through our local distributors

- Eliminato il 22-02-2022. Verificare la disponibilità presso i nostri distributori
- Eliminé le 22-02-2022. Verifier la disponibilité auprès de nos distributeurs sur place
- Am 22-02-2022 gestrichen. Evtl. Verfügbarkeit bitte bei unseren Händlern prüfen
- Eliminado en fecha 22-02-2022. Verificar la disponibilidad a través de nuestros distribuidores locales

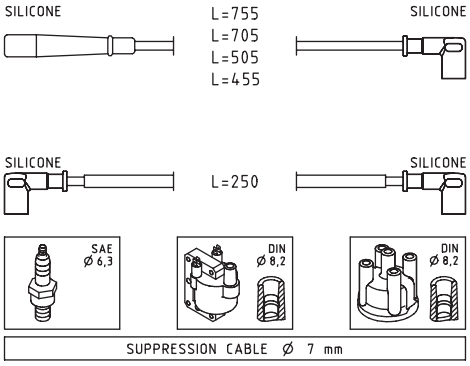

SAAB		
90 2.0	B20I	08/84 ⇨ 08/87
900 I 2.0 c	B201XC	09/79 ⇨ 12/88
900 I 2.0 i	0TLE4G15, B201XI	11/80 ⇨ 08/90
900 I 2.0 Turbo	B201XL	01/86 ⇨ 12/91

FACET 4.9145 — 07

IGNITION CABLE SETS

Adatt./Suitable:

[03] Supplied until depletion

- Fornibile fino ad esaurimento delle scorte
- Fourni jusqu'à épuisement du stock
- Lieferbar solange vorrat reicht
- Suministrado hasta el stock termina

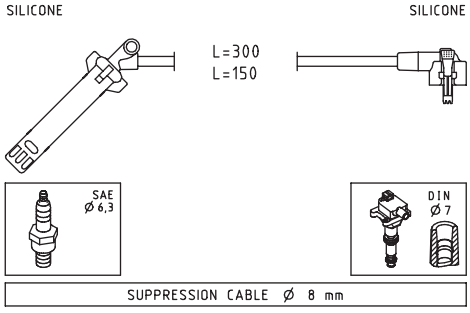

FORD		
ESCORT V RS 2000	N7A	05/91 ⇨ 01/95
ESCORT VI RS 2000	N7A	02/95 ⇨ 02/98
ESCORT VI RS 2000 4x4	N7A	02/95 ⇨ 10/98
GALAXY I 2.3 16V	Y5B	01/97 ⇨ 05/06
SCORPIO II 2.0 i 16V	N3A	10/94 ⇨ 08/98
SCORPIO II 2.3 i 16V	Y5A	06/96 ⇨ 08/98
TRANSIT III 2.3	E5FA, E5FC	08/00 ⇨ 03/06
TRANSIT III 2.3 16V	E5FA, E5FC	04/01 ⇨ 05/06
TRANSIT III 2.3 16V RWD	E5FA, E5FC	08/00 ⇨ 05/06

FACET 4.9209 — 07

IGNITION CABLE SETS

Adatt./Suitable:

BOSCH
0 986 356 928
F 005 X03 926

HITACHI
134130

HOLDEN
9091922327

MAGNETI MARELLI
941318111274

TOYOTA
90919-22327

[03] Supplied until depletion

- Fornibile fino ad esaurimento delle scorte
- Fourni jusqu'à épuisement du stock
- Lieferbar solange vorrat reicht
- Suministrado hasta el stock termina

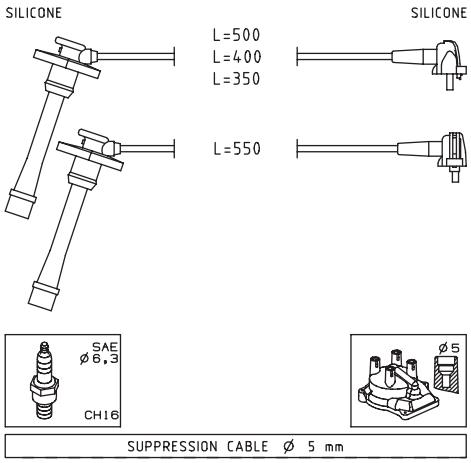

HOLDEN		
NOVA_LF 1.8i Hatchback	7AFE	08/91 ⇨ 03/93
NOVA_LF 1.8i Sedan	7AFE	08/91 ⇨ 03/93
NOVA_LG 1.6i Hatchback	4AFE	09/94 ⇨ 09/96
NOVA_LG 1.6i Sedan	4AFE	09/94 ⇨ 09/96
NOVA_LG 1.8i Hatchback	7AFE	09/94 ⇨ 09/96
NOVA_LG 1.8i Sedan	7AFE	09/94 ⇨ 09/96

TOYOTA		
AVENSIS I 1.6	4A-FE	09/97 ⇨ 10/00
CARINA E 1.6	4A-FE	04/92 ⇨ 09/97
CARINA E 1.6 16V	4A-FE	12/94 ⇨ 09/97
CARINA E 1.6 GLI	4A-FE	04/92 ⇨ 09/97
CARINA E 1.6 i	4A-FE	02/95 ⇨ 09/97
COROLLA VII 1.6 GLI	4A-FE	07/92 ⇨ 04/97
COROLLA VII 1.6 Si	4A-FE	07/92 ⇨ 04/97
COROLLA VII 1.8 16V 4WD	7A-FE	09/95 ⇨ 04/97
COROLLA VII 1.8 GT	7A-FE	11/92 ⇨ 05/95
COROLLA VIII 1.6	4A-FE	04/97 ⇨ 02/00
COROLLA VIII 1.6 Aut.	4A-FE	04/97 ⇨ 02/00
COROLLA VIII 1.8 4WD	7A-FE	04/97 ⇨ 10/01
CELICA VI 1.8 i 16V	7A-FE	11/93 ⇨ 11/99
CELICA VI 1.8 i 16V [USA] [CAN]	7A-FE	09/93 ⇨ 08/99

FACET 4.9231 — 07

IGNITION CABLE SETS

Adatt./Suitable:

BOSCH
0 986 357 149

MAZDA
B69F-18-140A
B69F-18-140B
B6BF-18-140A
B6BF-18-140B

[00] Eliminated on 22-02-2021. Please verify the availability through our local distributors

- Eliminato il 22-02-2021. Verificare la disponibilità presso i nostri distributori
- Eliminé le 22-02-2021. Verifier la disponibilité auprès de nos distributeurs sur place
- Am 22-02-2021 gestrichen. Evtl. Verfügbarkeit bitte bei unseren Händlern prüfen
- Eliminado en fecha 22-02-2021. Verificar la disponibilidad a través de nuestros distribuidores locales

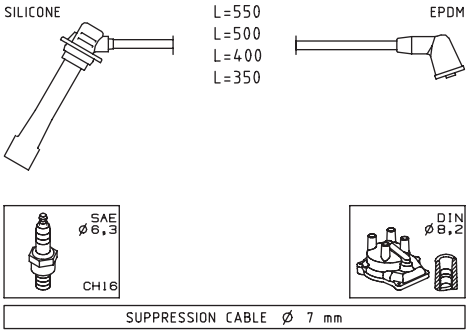

MAZDA		
323 VII C 1.8 16V	BP-ZE	08/94 ⇨ 09/98
323 VII 1.8 16V	BP-ZE	08/94 ⇨ 09/98
323 VIII S 1.8 16V	BP-ZE	08/94 ⇨ 09/98
MX-3 1.6 i	B6D	11/93 ⇨ 09/98
XEDOS 6 1.6 16V	B6(DOHC), B69	01/92 ⇨ 10/99

FACET 4.9237 — 07,5

IGNITION CABLE SETS

Adatt./Suitable:

BOSCH
0 986 356 747
0 986 357 127
0 986 357 148
0 986 357 156
F 005 X11 115

GENERAL MOTORS
90 442 406
90 442 410
90 443 690
90 443 691

HITACHI
134296

HOLDEN
90443690

MAGNETI MARELLI
941125120666

OPEL
16 12 533
16 12 541
16 12 544
16 12 556
16 12 557
16 12 610

[03] Supplied until depletion

- Fornibile fino ad esaurimento delle scorte
- Fourni jusqu'à épuisement du stock
- Lieferbar solange vorrat reicht
- Suministrado hasta el stock termina

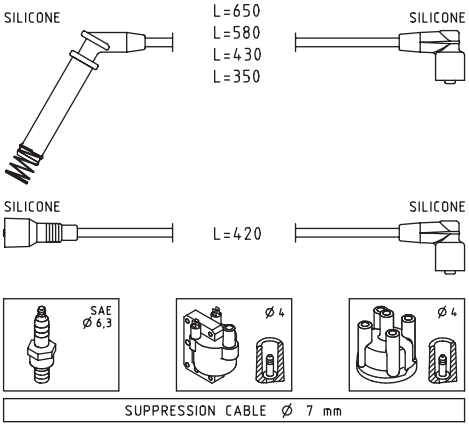

HOLDEN		
BARINA 1.4 i	C14NZ	04/94 ⇨ 07/97

HOLDEN		
BARINA_SB 1.2i	C12NZ	04/94 ⇨ 07/97
COMBO 1.4 i	C14NZ	03/96 ⇨ 07/97
COMBO_SB 1.4i	C14NZ	04/94 ⇨ 07/97
OPEL		
ASTRA F 1.4	14NV, 14SE	09/91 ⇨ 09/98
ASTRA F 1.4 i	C14NZ	09/91 ⇨ 01/05
ASTRA F 1.4 Si	C14SE	03/92 ⇨ 03/01
COMBO B 1.2	C12NZ, X12SZ	07/94 ⇨ 10/01
CORSA A 1.2 i	C12NZ	09/89 ⇨ 03/93
CORSA A 1.4 i	C14NZ	01/85 ⇨ 03/93
CORSA A 1.4 S	14NV	09/89 ⇨ 03/93
CORSA A 1.4 Si	C14SE	09/91 ⇨ 03/93
CORSA B 1.2 i	12NZ, C12NZ, X12SZ	03/93 ⇨ 09/00
KADETT E 1.4 i	C14NZ	01/90 ⇨ 07/94
KADETT E 1.4 S	14NV	07/89 ⇨ 02/93
KADETT E 1.6	16SV	09/86 ⇨ 12/91
KADETT E 1.6 i	16SV	07/89 ⇨ 02/93
KADETT E 1.6 S	16SV	09/86 ⇨ 08/91
VECTRA A 1.4 S	14NV	04/88 ⇨ 06/92
VECTRA A 1.6	16SV	09/88 ⇨ 05/93
VECTRA A 1.6 i	C16NZ, E16NZ	09/88 ⇨ 11/95
VECTRA A 1.6 i Cat	C16NZ	09/88 ⇨ 11/95
VECTRA A 1.6 S	16SV	09/88 ⇨ 05/93
VAUXHALL		
ASTRA III 1.4	14NV	09/91 ⇨ 09/93
ASTRA III 1.4 i	C14NZ, C14SE	03/91 ⇨ 09/98
ASTRA III 1.4 S	14NV	09/91 ⇨ 02/98
ASTRAVAN I 1.4 i	C14NZ	09/91 ⇨ 08/95
COMBO B 1.2	C12NZ, X12SZ	07/94 ⇨ 10/01
CORSA B 1.2 i	C12NZ, X12SZ	03/93 ⇨ 09/00

FACET 4.9278 — 07,5

IGNITION CABLE SETS

Adatt./Suitable:

BOSCH
0 986 357 147

HITACHI
134279

MAGNETI MARELLI
941285030866

MITSUBISHI
MD183124
MD193015
MD198216
MD310297
MD315902
MD334017
MD334021
MD334026
MD334039

[03] **Supplied until depletion**
- Fornibile fino ad esaurimento delle scorte
- Fourni jusqu'à épuisement du stock
- Lieferbar solange vorrat reicht
- Suministrado hasta el stock termina

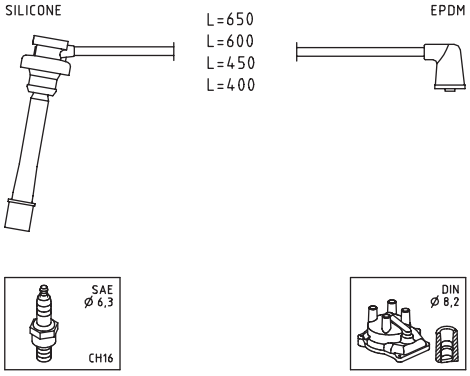

MITSUBISHI		
COLT IV 1.6 4WD	4G92(SOHC16V)	08/93 ⇨ 08/95
COLT IV 1.6 GLXi 16V	4G92(SOHC16V)	04/92 ⇨ 04/96
GALANT VII 1.8	4G93(SOHC16V)	02/94 ⇨ 08/96
GALANT VII 1.8 GLSI	4G93(SOHC16V)	11/92 ⇨ 08/96
GALANT VII 2.0 GLSI	4G63(SOHC16V)	11/92 ⇨ 08/96
GALANT VII 2.0 GLSI 4WD	4G63(SOHC16V)	11/92 ⇨ 08/96
LANCER V 1.6 16V	4G92(SOHC16V)	06/92 ⇨ 05/94
LANCER V 1.6 4WD	4G92(SOHC16V)	06/92 ⇨ 11/93
LANCER VI 1.6	4G92(SOHC16V)	02/94 ⇨ 12/96
LANCER VI 1.6 16V	4G92(SOHC16V)	06/92 ⇨ 10/03
LANCER VI 1.6 16V 4WD	4G92(SOHC16V)	06/92 ⇨ 10/03
LANCER VI 1.6 i	4G92(SOHC16V)	09/92 ⇨ 07/96
SPACE RUNNER 1.8	4G93(SOHC16V)	10/91 ⇨ 08/99
SPACE RUNNER 1.8 4WD	4G93(SOHC16V)	10/91 ⇨ 08/99
SPACE WAGON 1.8	4G93(SOHC16V)	10/91 ⇨ 10/98
SPACE WAGON 1.8 4WD	4G93(SOHC16V)	10/91 ⇨ 10/98
SPACE WAGON 2.0	4G63(SOHC16V)	10/92 ⇨ 10/98
SPACE WAGON 2.0 4WD	4G63(SOHC16V)	10/92 ⇨ 10/98

FACET 4.9281 — 07

IGNITION CABLE SETS

Adatt./Suitable:

[00] **Eliminated on 02-12-2019. Please verify the availability through our local distributors**
- Eliminato il 02-12-2019. Verificare la disponibilità presso i nostri distributori
- Eliminé le 02-12-2019. Verifier la disponibilité auprès de nos distributeurs sur place
- Am 02-12-2019 gestrichen. Evtl. Verfügbarkeit bitte bei unseren Händlern prüfen
- Eliminado en fecha 02-12-2019. Verificar la disponibilidad a través de nuestros distribuidores locales

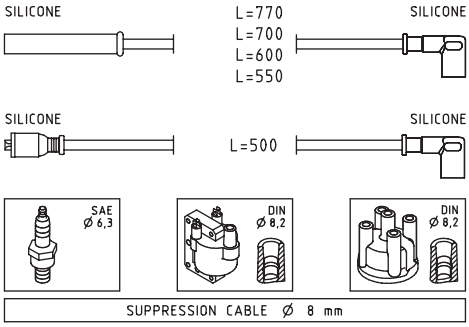

FORD		
ESCORT IV 1.4	F6D, FUC	01/86 ⇨ 07/90
ESCORT IV 1.6 XR3i	LR2, LRB	01/86 ⇨ 07/90
FIESTA II 1.4	FUB, FUD	10/85 ⇨ 11/89
FIESTA II 1.6 XR2	LUB, LUD	03/84 ⇨ 02/89
FIESTA III 1.4	F6E	03/89 ⇨ 12/95
ESCORT III 1.4 i	F6D, FUC	02/86 ⇨ 07/90
ORION I 1.4 Cat	F6D	02/87 ⇨ 07/90
ORION I 1.6 i	LRB	03/86 ⇨ 07/90

FACET 4.9300 — 07,5

IGNITION CABLE SETS

Adatt./Suitable:

[03] **Supplied until depletion**
- Fornibile fino ad esaurimento delle scorte
- Fourni jusqu'à épuisement du stock
- Lieferbar solange vorrat reicht
- Suministrado hasta el stock termina

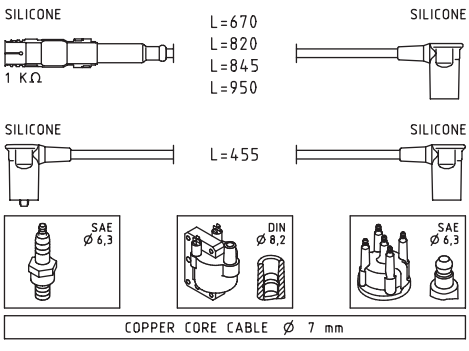

MERCEDES-BENZ		
190 2.3	M102.985	09/87 ⇨ 09/88
190 2.3 E	M102.985	10/82 ⇨ 09/88
190 E 1.8	M102.910, M102.919	04/90 ⇨ 12/93
190 E 2.0	M102.962	10/82 ⇨ 08/93
190 E 2.3	M102.985	09/86 ⇨ 08/93
KOMBI II 200 TE	M102.962	09/88 ⇨ 12/89

FACET 4.9305 — 07,5

IGNITION CABLE SETS

Adatt./Suitable:

[03] **Supplied until depletion**
- Fornibile fino ad esaurimento delle scorte
- Fourni jusqu'à épuisement du stock
- Lieferbar solange vorrat reicht
- Suministrado hasta el stock termina

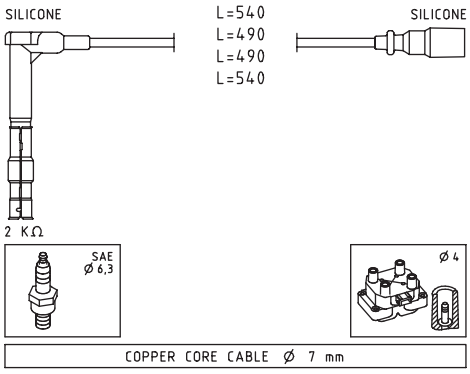

MERCEDES-BENZ		
CLASSE C I C 180	M111.920	03/93 ⇨ 05/00
CLASSE C I C 180 T	M111.920	06/96 ⇨ 09/00
CLASSE C I C 200	M111.941	01/94 ⇨ 05/00
CLASSE C I C 200 T	M111.941	06/96 ⇨ 03/01

FACET 4.9323 — 09

IGNITION CABLE SETS

Adatt./Suitable:

[00] **Eliminated on 22-02-2022. Please verify the availability through our local distributors**
- Eliminato il 22-02-2022. Verificare la disponibilità presso i nostri distributori
- Eliminé le 22-02-2022. Verifier la disponibilité auprès de nos distributeurs sur place
- Am 22-02-2022 gestrichen. Evtl. Verfügbarkeit bitte bei unseren Händlern prüfen
- Eliminado en fecha 22-02-2022. Verificar la disponibilidad a través de nuestros distribuidores locales

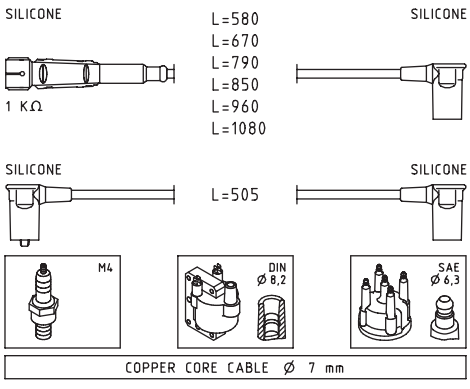

MERCEDES-BENZ		
123 280 CE	M110.988	03/77 ⇨ 11/85
CLASSE S II 280 SE, SEL	M110.989	10/79 ⇨ 07/85
TRE VOLUMI I 280 E	M110.988	02/76 ⇨ 11/85

FACET 4.9332 — 07

IGNITION CABLE SETS

Adatt./Suitable:

[03] **Supplied until depletion**
- Fornibile fino ad esaurimento delle scorte
- Fourni jusqu'à épuisement du stock
- Lieferbar solange vorrat reicht
- Suministrado hasta el stock termina

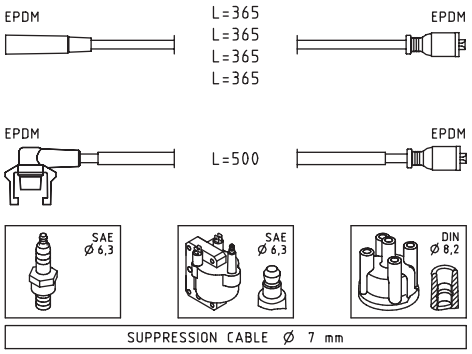

RENAULT		
TWINGO I 1.2	C3G700, C3G702	03/93 ⇨ 10/96
VOLVO		
340-360 1.3	B13, B13.4E	08/88 ⇨ 12/90
340-360 1.4	B14.3E, B14.4E, B14.4ED, B14.40, B14.4S	08/82 ⇨ 07/91

FACET 4.9343 — 07,5

IGNITION CABLE SETS

Adatt./Suitable:

BOSCH
0 986 357 248
CHRYSLER
4797685
SPW07685AA

[00] **Eliminated on 09-12-2019. Please verify the availability through our local distributors**
- Eliminato il 09-12-2019. Verificare la disponibilità presso i nostri distributori
- Eliminé le 09-12-2019. Verifier la disponibilité auprès de nos distributeurs sur place
- Am 09-12-2019 gestrichen. Evtl. Verfügbarkeit bitte bei unseren Händlern prüfen
- Eliminado en fecha 09-12-2019. Verificar la disponibilidad a través de nuestros distribuidores locales

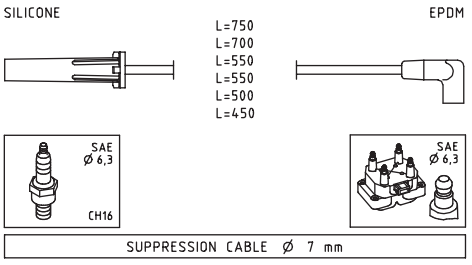

CHRYSLER		
VOYAGER II 3.3 i	R00	01/95 ⇨ 03/01
VOYAGER II 3.8 i AWD	EGH, L00	01/95 ⇨ 03/01

FACET 4.9344 — 07,5

IGNITION CABLE SETS

Adatt./Suitable:

MITSUBISHI
MD338249
MD371794
MD371980

[00] **Eliminated on 07-10-2019. Please verify the availability through our local distributors**
- Eliminato il 07-10-2019. Verificare la disponibilità presso i nostri distributori
- Eliminé le 07-10-2019. Verifier la disponibilité auprès de nos distributeurs sur place
- Am 07-10-2019 gestrichen. Evtl. Verfügbarkeit bitte bei unseren Händlern prüfen
- Eliminado en fecha 07-10-2019. Verificar la disponibilidad a través de nuestros distribuidores locales

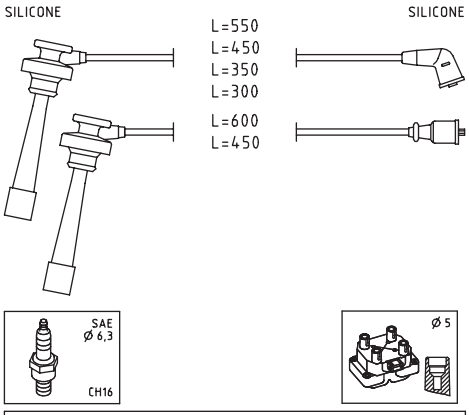

MITSUBISHI		
PAJERO III 3.0	6G72(SOHC24V)	10/01 ⇨ 12/06
PAJERO III 3.0 ZR	6G72(DOHC24V)	08/03 ⇨
PAJERO III 3.5	6G74(DOHC24V)	04/00 ⇨ 01/07
PAJERO III 3.5 i	6G74(DOHC24V), 6G74(SOHC24V)	09/03 ⇨ 10/06
PAJERO III 3.5 V6 GDI	6G74(GDI)	04/00 ⇨ 12/06
PAJERO II 3.0 V6 24V	6G72(SOHC24V)	06/94 ⇨ 04/00
PAJERO II 3.5 V6 24V	6G74(DOHC24V), 6G74(SOHC24V)	06/94 ⇨ 10/99
PAJERO SPORT I 3.0 4WD	6G72(SOHC24V)	09/96 ⇨ 12/01
PAJERO SPORT I 3.0 V6	6G72(SOHC24V)	06/00 ⇨
PAJERO SPORT I 3.0 V6 4WD	6G72(DOHC24V)	03/03 ⇨

FACET 4.9345 — 07,5

IGNITION CABLE SETS

Adatt./Suitable:

CHRYSLER
5019593AA

[03] **Supplied until depletion**
- Fornibile fino ad esaurimento delle scorte
- Fourni jusqu'à épuisement du stock
- Lieferbar solange vorrat reicht
- Suministrado hasta el stock termina

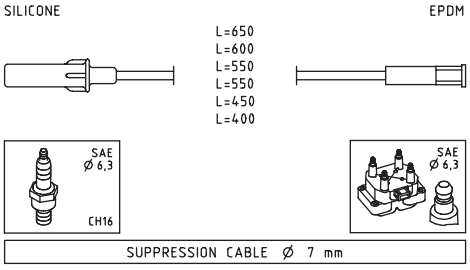

CHRYSLER		
VOYAGER III 3.3	EGA	02/00 ⇨ 12/08
VOYAGER III 3.3 AWD	EGA	02/00 ⇨ 12/08

FACET 4.9353 — 07

IGNITION CABLE SETS

Adatt./Suitable:

[00] **Eliminated on 22-02-2022. Please verify the availability through our local distributors**
- Eliminato il 22-02-2022. Verificare la disponibilità presso i nostri distributori
- Eliminé le 22-02-2022. Verifier la disponibilité auprès de nos distributeurs sur place
- Am 22-02-2022 gestrichen. Evtl. Verfügbarkeit bitte bei unseren Händlern prüfen
- Eliminado en fecha 22-02-2022. Verificar la disponibilidad a través de nuestros distribuidores locales

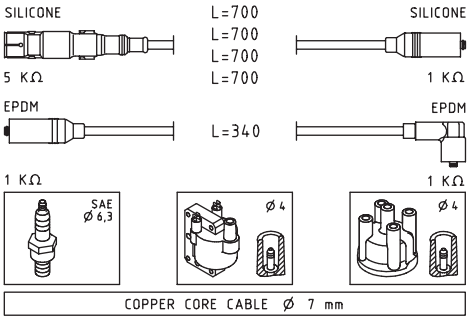

AUDI		
A4 I 1.6	ADP	11/94 ⇨ 09/01
VW		
PASSAT IV 1.6	ADP	10/96 ⇨ 11/00

FACET 4.9356 — 08

IGNITION CABLE SETS

Adatt./Suitable:

[00] **Eliminated on 22-02-2021. Please verify the availability through our local distributors**
- Eliminato il 22-02-2021. Verificare la disponibilità presso i nostri distributori
- Eliminé le 22-02-2021. Verifier la disponibilité auprès de nos distributeurs sur place
- Am 22-02-2021 gestrichen. Evtl. Verfügbarkeit bitte bei unseren Händlern prüfen
- Eliminado en fecha 22-02-2021. Verificar la disponibilidad a través de nuestros distribuidores locales

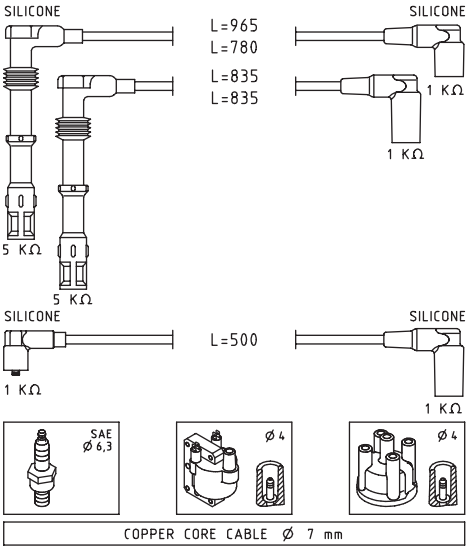

AUDI		
100 IV 2.0 E 16V	ACE	01/92 ⇨ 07/94
100 IV 2.0 E 16V quattro	ACE	07/92 ⇨ 07/94
A6 I 2.0 16V	ACE	06/94 ⇨ 12/97
A6 I 2.0 16V quattro	ACE	06/94 ⇨ 12/97

FACET 4.9363 — 07

IGNITION CABLE SETS

Adatt./Suitable:

BOSCH
0 356 912 881
FIAT
7760523
HITACHI
134534
134758
IVECO
7760523
LANCIA
7760523
MAGNETI MARELLI
941095790617

[03] **Supplied until depletion**
- Fornibile fino ad esaurimento delle scorte
- Fourni jusqu'à épuisement du stock
- Lieferbar solange vorrat reicht
- Suministrado hasta el stock termina

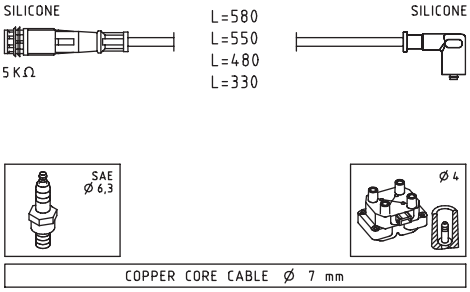

FIAT		
BRAVA 1.4	182A5.000	10/95 ⇨ 10/01
BRAVA 1.4 12 V	182A3.000	10/95 ⇨ 08/98
BRAVO I 1.4	182A3.000, 182A5.000	10/95 ⇨ 10/01
MAREA 1.4 80 12V	182A3.000	09/96 ⇨ 05/02
LANCIA		
Y I 1.4 12V	840A2.000, 840A4.000	03/96 ⇨ 09/03

FACET 4.9364 — 07

IGNITION CABLE SETS

Adatt./Suitable:

[03] **Supplied until depletion**
- Fornibile fino ad esaurimento delle scorte
- Fourni jusqu'à épuisement du stock
- Lieferbar solange vorrat reicht
- Suministrado hasta el stock termina

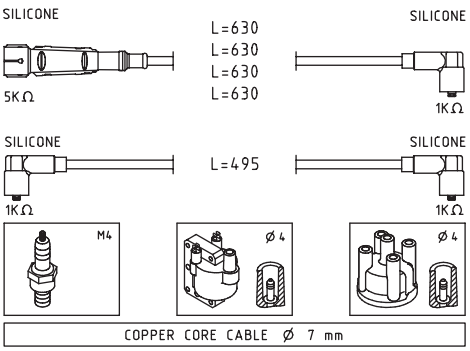

SEAT		
CORDOBA I 1.4 i	ABD	06/94 ⇨ 10/02
CORDOBA I 1.6 i	ABU	02/93 ⇨ 10/02
IBIZA II 1.4 i	ABD	09/93 ⇨ 02/02
IBIZA II 1.6 i	ABU	03/93 ⇨ 02/02
VW		
POLO II 1.0	AAU, HZ	01/85 ⇨ 09/94
POLO II 1.0 Cat	AAU, ACM	08/89 ⇨ 09/94
POLO II 1.3	3F	10/90 ⇨ 09/94
POLO II 1.3 Cat	2G, 3F, AAV, MH, NZ	07/87 ⇨ 09/94
POLO II 1.3 G40	PY	08/90 ⇨ 09/94
GOLF III 1.6	ABU, AEA	09/92 ⇨ 08/97
POLO III 45 1.0	AEV	10/94 ⇨ 09/96
POLO III 50 1.0	AER	09/96 ⇨ 10/99
POLO III 55 1.3	ADX	10/94 ⇨ 04/97
POLO IV 1.0	AER	08/96 ⇨ 12/01
VENTO 1.6	ABU	09/92 ⇨ 09/98

FACET 4.9373 — 07

IGNITION CABLE SETS

Adatt./Suitable:

[00] **Eliminated on 22-02-2022. Please verify the availability through our local distributors**
- Eliminato il 22-02-2022. Verificare la disponibilità presso i nostri distributori
- Eliminé le 22-02-2022. Verifier la disponibilité auprès de nos distributeurs sur place
- Am 22-02-2022 gestrichen. Evtl. Verfügbarkeit bitte bei unseren Händlern prüfen
- Eliminado en fecha 22-02-2022. Verificar la disponibilidad a través de nuestros distribuidores locales

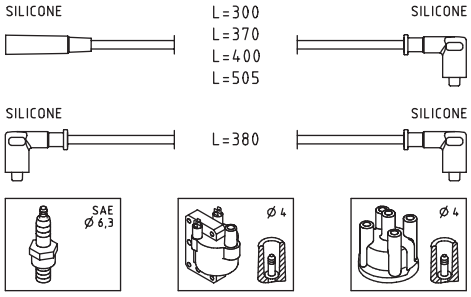

SKODA		
FELICIA 1.3	135, 135L, 136I	10/94 ⇨ 03/98

FACET 4.9374 — 07

IGNITION CABLE SETS

Adatt./Suitable:

BOSCH
0 986 357 240
CITROËN
5967 N6
5967 P1
PEUGEOT
5967 N6
5967 P1

[00] **Eliminated on 10-12-2021. Please verify the availability through our local distributors**
- Eliminato il 10-12-2021. Verificare la disponibilità presso i nostri distributori
- Eliminé le 10-12-2021. Verifier la disponibilité auprès de nos distributeurs sur place
- Am 10-12-2021 gestrichen. Evtl. Verfügbarkeit bitte bei unseren Händlern prüfen
- Eliminado en fecha 10-12-2021. Verificar la disponibilidad a través de nuestros distribuidores locales

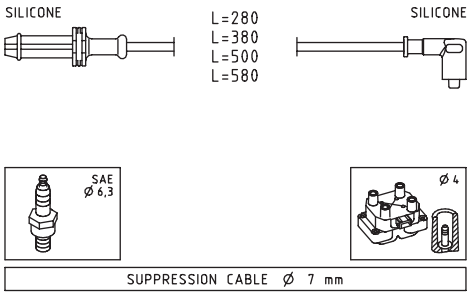

CITROËN		
AX 1.4 GTi	KFY(TU3FJ2), KFZ(TU3FJ2)	06/91 ⇨ 12/96
AX 10	CDY(TU9M), CDZ(TU9M)	07/86 ⇨ 12/98
AX 11	HDZ(TU1M)	09/86 ⇨ 12/97
AX 14	K6B(TU3FJ2), KDX(TU3M/Z), KDY(TU3FM)	04/87 ⇨ 04/97
AX 14 4x4	KDY(TU3FM)	08/91 ⇨ 12/96
XSARA 1.4 i	KFX(TU3JP)	04/97 ⇨ 08/05
XSARA 1.6 i	NFZ(TU5JP)	04/97 ⇨ 09/00
BERLINGO I 1.1 i	HDZ(TU1M)	07/96 ⇨ 05/08
BERLINGO I 1.4 i	KFW(TU3JP), KFX(TU3JP)	07/96 ⇨ 12/11
BERLINGO I 1.4 i bivalent	KFW(TU3JP)	04/03 ⇨ 10/05
SAXO 1.0 X	CDZ(TU9M)	05/96 ⇨ 11/98
SAXO 1.1 X, SX	HDZ(TU1M)	05/96 ⇨ 09/03
SAXO 1.4 VTS	KFX(TU3JP)	05/96 ⇨ 06/03
SAXO 1.6	NFT(TU5JP), NFZ(TU5JP)	02/01 ⇨ 04/04
SAXO 1.6 VTL, VTR	NFZ(TU5JP)	05/96 ⇨ 06/03
SAXO 1.6 VTS	NFT(TU5JP)	09/00 ⇨ 09/03
ZX 1.1	HDZ(TU1M)	03/91 ⇨ 06/97
ZX 1.4	KDZ(TU3M/Z)	03/91 ⇨ 06/97
ZX 1.4 i	KDX(TU3M/Z), KDZ(TU3M/Z), KFX(TU3JP)	03/91 ⇨ 10/97
PEUGEOT		
106 I 1.0	CDY(TU9M), CDZ(TU9M)	09/91 ⇨ 03/01
106 I 1.1	HDZ(TU1M)	09/91 ⇨ 04/96
106 I 1.3	TU2J2	10/93 ⇨ 04/96
106 I 1.4	KDX(TU3MC)	09/91 ⇨ 04/96
106 I 1.4 i XSI	TU3J	09/91 ⇨ 03/96
106 I 1.4 Le Mans	KFZ(TU3J2/Z)	09/91 ⇨ 11/94
106 I 1.6	NFY(TU5J2), NFZ(TU5JP)	06/93 ⇨ 04/96
106 II 1.0 i	CDY(TU9M), CDZ(TU9M)	04/96 ⇨ 10/99
106 II 1.1 i	HDY(TU1M), HDZ(TU1M)	05/96 ⇨ 07/04
106 II 1.4 i	KFW(TU3JP), KFX(TU3JP)	05/96 ⇨ 07/04
106 II 1.6 i	NFW(TU5J2), NFY(TU5J2), NFZ(TU5JP)	05/96 ⇨ 10/99
306 1.4	KFW(TU3JP), KFX(TU3JP)	04/93 ⇨ 04/02
306 1.4 SL	KFW(TU3JP), KFX(TU3JP)	06/94 ⇨ 05/01
306 1.6	NFZ(TU5JP)	05/93 ⇨ 10/00
306 1.6 SR	NFZ(TU5JP)	06/94 ⇨ 10/00
PARTNER I 1.1	HDY(TU1M), HDZ(TU1M)	06/96 ⇨
PARTNER I 1.4	KFX(TU3JP), TU32	06/96 ⇨ 12/15
RANCH 1.1	HDY(TU1M), HDZ(TU1M)	06/96 ⇨
RANCH 1.4	KFX(TU3JP)	06/96 ⇨

FACET 4.9376 — 07

IGNITION CABLE SETS

Adatt./Suitable:

CITROËN
5967 N9

[00] **Eliminated on 14-04-2020. Please verify the availability through our local distributors**
- Eliminato il 14-04-2020. Verificare la disponibilità presso i nostri distributori
- Eliminé le 14-04-2020. Verifier la disponibilité auprès de nos distributeurs sur place
- Am 14-04-2020 gestrichen. Evtl. Verfügbarkeit bitte bei unseren Händlern prüfen
- Eliminado en fecha 14-04-2020. Verificar la disponibilidad a través de nuestros distribuidores locales

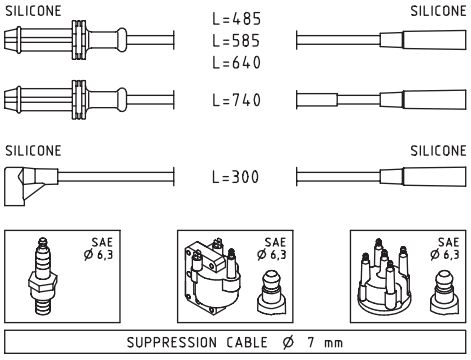

CITROËN		
AX 1.3 Sport	M4A	04/87 ⇨ 12/88
AX 10	C1A	09/86 ⇨ 06/92
AX 10 E	C3A	12/86 ⇨ 12/88
AX 11	H1A, H1B, HDZ(TU1M)	09/86 ⇨ 12/97
AX 11 4x4	H1A	06/91 ⇨ 07/92
AX 11 Cat	HAZ(TU1CP)	09/88 ⇨ 12/89
AX 14	K1A(TU3), K1B, K1F, K1G, K1J, K2A, K2B, K2D, KAY(TU3CP), KDX(TU3M/Z), KDY(TU3FM), KDY(TU3M), KDZ(TU3M/Z)	09/86 ⇨ 04/97
AX 14 4x4	KD4, KDX(TU3M/Z), KDY(TU3FM), KDY(TU3M), KDZ(TU3M/Z)	06/91 ⇨ 12/96
AX 14 GT	KDZ(TU3M/Z)	01/89 ⇨ 12/91
BX 1.1	109LA, H1A	04/86 ⇨ 06/91
BX 1.4	150C, K1F, K2D	07/86 ⇨ 12/94
BX 1.4 E	150B(XY8), 150J, 150Y, K1F, KAZ	09/82 ⇨ 12/94
BX 14	150C, KDY(TU3M), KDZ(TU3M/Z)	01/86 ⇨ 02/93
BX 14 E	150A, 150C, K1G	10/82 ⇨ 02/93
C15 1.0	108C(XV8), C1A, C1A(TU9/K), C1B(TU9/W), TU9	10/84 ⇨ 12/97
C15 1.1	H1A, HDZ(TU1M), TU1	08/88 ⇨ 07/96

CITROËN		
C15 1.1 i	HDZ(TU1M), TU1MZ	07/88 ⇨ 12/96
C15 1.4	K1A, K1G, K1H(TU3A), KDY(TU3M)	07/87 ⇨ 12/96
C15 1.4 E	K1F, K1J, K2D, K3A, KAZ	07/86 ⇨ 12/96
C15 1.4 i	KDY(TU3FM), KDY(TU3M)	05/91 ⇨ 12/96
BERLINGO I 1.4	TU32	07/96 ⇨ 10/98
ZX 1.1	H1A, H1B, HDZ(TU1M), TU1	03/91 ⇨ 06/97
ZX 1.4 i	KDY(TU3M)	10/93 ⇨ 10/97

FACET 4.9385 — 07,5

IGNITION CABLE SETS

Adatt./Suitable:

HYUNDAI
27501-23A00
27501-23B01
27501-23B70

KIA
27501-23B70

[03] **Supplied until depletion**
- Fornibile fino ad esaurimento delle scorte
- Fourni jusqu'à épuisement du stock
- Lieferbar solange vorrat reicht
- Suministrado hasta el stock termina

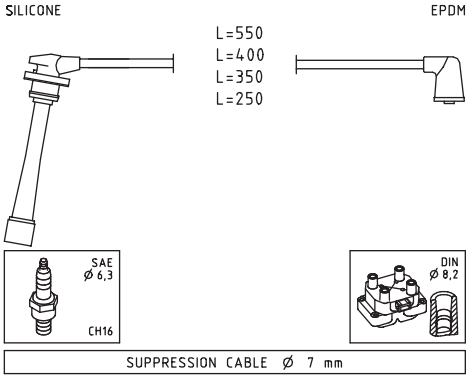

HYUNDAI		
COUPE I 1.6 16V	G4GR	03/98 ⇨ 04/02
COUPE I 1.6 i 16V	4G61	12/96 ⇨ 04/02
COUPE I 2.0 16V	G4GF	08/96 ⇨ 04/02
ELANTRA II 1.6 i 16V	G4GR	06/95 ⇨ 05/00
ELANTRA II 1.8 i 16V	G4GM	05/95 ⇨ 05/00
ELANTRA II 2.0 i 16V	G4DF	06/97 ⇨ 05/00
ELANTRA III 1.8	G4BB, G4GB	06/00 ⇨ 07/06
ELANTRA III 2.0	G4GC, G4GC-G	06/00 ⇨ 07/06
ELANTRA IV 2.0 CVVT	G4GC	06/06 ⇨ 06/11
I30 I 2.0	G4GC, G4GC-G	10/07 ⇨ 06/12
LANTRA 1.8	G4GB	06/00 ⇨
LANTRA 2.0	G4GC-G	06/00 ⇨
LANTRA II 1.6 16V	4G61	11/95 ⇨ 10/00
LANTRA II 1.6 i	G4GR	11/95 ⇨ 10/00
LANTRA II 1.8 16V	G4GM	11/95 ⇨ 10/00
LANTRA II 2.0 16V	G4GF	11/95 ⇨ 10/00
LAVITA 1.8	--	01/07 ⇨
MATRIX 1.8	G4GB-G	06/01 ⇨ 08/10
MATRIX 1.8 [TUR]	G4GB	04/08 ⇨
SONATA V 2.0 i [RUS]	--	04/06 ⇨ 12/10
COUPE II 2.0	G4GC-G	08/01 ⇨ 08/09
COUPE II 2.0 GLS	G4GC-G	02/03 ⇨ 08/09
TIBURON 1.6 i 16V	G4GL, G4GR	08/00 ⇨
TIBURON 2.0 i 16V	G4DF	08/99 ⇨
TRAJET 2.0	G4GC, G4GC-G, G4JP-G	03/00 ⇨ 07/08
TRAJET 2.0 CRDi	D4EA	08/05 ⇨ 07/08
TUCSON 2.0	G4GC	08/04 ⇨
TUCSON 2.0 Trazione integrale	G4GC	08/04 ⇨ 11/10

KIA		
CARENS I 2.0 CVVT	G4GC	08/04 ⇨
CEED I 2.0	G4GC	12/06 ⇨ 12/12
CERATO I 2.0	G4GC	03/04 ⇨ 05/07
PRO CEE'D I 2.0	G4GC	02/08 ⇨ 09/12
SPORTAGE II 2.0 16V 4WD	G4GC	09/04 ⇨
SPORTAGE II 2.0 i 16V	G4GC	09/04 ⇨
CERATO II 2.0 CVVT	--	01/09 ⇨

FACET 4.9393 — 05

IGNITION CABLE SETS

Adatt./Suitable:

BOSCH
0 986 357 171

TOYOTA
90919-22329

[00] **Eliminated on 04-05-2020. Please verify the availability through our local distributors**
- Eliminato il 04-05-2020. Verificare la disponibilità presso i nostri distributori
- Eliminé le 04-05-2020. Verifier la disponibilité auprès de nos distributeurs sur place
- Am 04-05-2020 gestrichen. Evtl. Verfügbarkeit bitte bei unseren Händlern prüfen
- Eliminado en fecha 04-05-2020. Verificar la disponibilidad a través de nuestros distribuidores locales

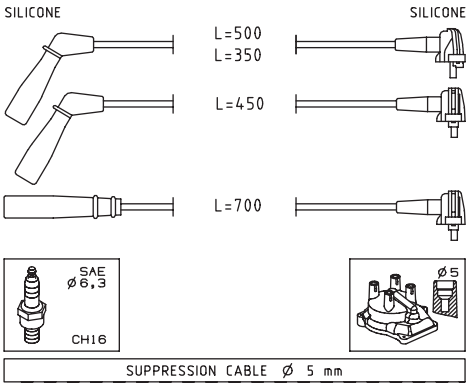

TOYOTA		
COROLLA VII 1.3 12V	2E	07/92 ⇨ 04/97
COROLLA VIII 1.3	2E	05/97 ⇨ 10/01
STARLET 1.0	1E	12/89 ⇨ 12/92
TERCEL 1.5 i [USA]	3EE	01/93 ⇨

FACET 4.9398 — 07

IGNITION CABLE SETS

Adatt./Suitable:

MAZDA
8BBG-18-140
8BBY-18-140

[00] **Eliminated on 14-06-2021. Please verify the availability through our local distributors**
- Eliminato il 14-06-2021. Verificare la disponibilità presso i nostri distributori
- Eliminé le 14-06-2021. Verifier la disponibilité auprès de nos distributeurs sur place
- Am 14-06-2021 gestrichen. Evtl. Verfügbarkeit bitte bei unseren Händlern prüfen
- Eliminado en fecha 14-06-2021. Verificar la disponibilidad a través de nuestros distribuidores locales

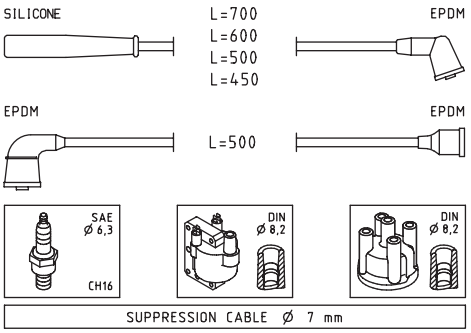

KIA		
PRIDE 1.1 i	B1	01/91 ⇨ 10/00
PRIDE 1.3	B3, B3A5	01/90 ⇨ 09/01
PRIDE 1.3 [GBR]	--	01/90 ⇨
PRIDE 1.3 i	--	01/90 ⇨ 05/97
PRIDE 1.3 i [GBR]	--	01/90 ⇨
SEPHIA I 1.6 i	B6	09/93 ⇨ 10/97
MAZDA		
323 VI C 1.6 16V	B6	03/91 ⇨ 10/94
323 VI F 1.6 16V	B6	03/91 ⇨ 10/94

MAZDA		
323 VI F 1.8 16V	BP	08/89 ⇨ 07/94
323 VI F 1.8 16V GT	BP(DOHC)	08/89 ⇨ 07/94
323 VI F 1.8i 16v GRSi	BP31	06/89 ⇨ 03/91
323 VI S 1.3 16V	B3(16V)	04/91 ⇨ 07/94
323 VI S 1.6 16V	B6	08/89 ⇨ 10/96
323 VI S 1.8 16V	BP52	08/89 ⇨ 07/94
323 VI S 1.8 16V 4WD	BP52	09/91 ⇨ 07/94
PROTEGE 1.8i OHC [USA]	--	01/90 ⇨

FACET 4.9399 — 07

IGNITION CABLE SETS

Adatt./Suitable:

BOSCH
0 986 357 239

NISSAN
22440-57Y10
22440-73C00
22440-73C10

[00] **Eliminated on 22-02-2021. Please verify the availability through our local distributors**
- Eliminato il 22-02-2021. Verificare la disponibilità presso i nostri distributori
- Eliminé le 22-02-2021. Verifier la disponibilité auprès de nos distributeurs sur place
- Am 22-02-2021 gestrichen. Evtl. Verfügbarkeit bitte bei unseren Händlern prüfen
- Eliminado en fecha 22-02-2021. Verificar la disponibilidad a través de nuestros distribuidores locales

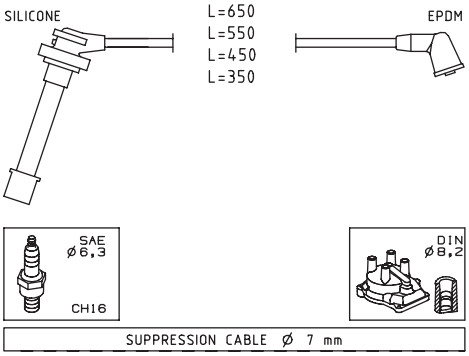

NISSAN		
100NX 1.6 SR	GA16DE	09/93 ⇨ 10/94
ALMERA I 1.4	GA14DE	09/95 ⇨ 07/00
ALMERA I 1.4 GX,LX	GA14DE	09/95 ⇨ 07/00
ALMERA I 1.4 S, GX, LX	GA14DE	09/95 ⇨ 03/00
ALMERA I 1.6	GA16DE	07/95 ⇨ 07/00
ALMERA I 1.6 SLX	GA16DE	09/95 ⇨ 07/00
ALMERA I 1.6 SR, SLX	GA16DE	09/95 ⇨ 03/00
PRIMERA I 1.6 i	GA16DE	02/91 ⇨ 03/98
SUNNY III 1.6 i	GA16DE	10/90 ⇨ 03/00
SUNNY III 1.6 i 16V	GA16DE	10/92 ⇨ 05/95

FACET 4.9401 — 07

IGNITION CABLE SETS

Adatt./Suitable:

BOSCH
0 986 356 974
0 986 357 151
HYUNDAI
27501-33A00
KIA
27501-33A00
MITSUBISHI
MD134754
MD192995

[00] **Eliminated on 22-02-2022. Please verify the availability through our local distributors**

- Eliminato il 22-02-2022. Verificare la disponibilità presso i nostri distributori
- Eliminé le 22-02-2022. Verifier la disponibilité auprès de nos distributeurs sur place
- Am 22-02-2022 gestrichen. Evtl. Verfügbarkeit bitte bei unseren Händlern prüfen
- Eliminado en fecha 22-02-2022. Verificar la disponibilidad a través de nuestros distribuidores locales

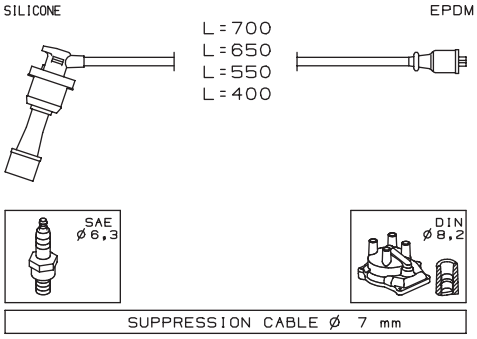

HYUNDAI		
ELANTRA I 1.5 i GL	G4DJ	12/90 ⇨ 08/94
ELANTRA I 1.6i 16V	G4CR	12/90 ⇨ 05/95
ELANTRA I 1.8i 16V	G4CN	06/92 ⇨ 12/95
LANTRA I 1.5 i.e.	G4DJ	10/90 ⇨ 11/95
LANTRA I 1.6 i.e. 16V	G4CR	10/90 ⇨ 11/95
LANTRA I 1.8 i.e. 16V	G4CN	10/90 ⇨ 11/95
SANTAMO 2.0 16V	G4JP	05/99 ⇨ 12/02
SANTAMO 2.0 16V 4x4	G4CP-D	05/99 ⇨ 12/02
SONATA II 2.0 i 16V	G4CP-D	01/91 ⇨ 10/93
SONATA III 2.0 i 16V	G4CP-D, G4CP-DM	05/93 ⇨ 06/98
KIA		
JOICE 2.0	G4CP	02/00 ⇨
MITSUBISHI		
COLT III 1.6 GTi 16V	4G61	04/88 ⇨ 05/90
COLT III 1.8 GTi 16V Cat	4G67	06/90 ⇨ 05/92
LANCER V 1.6 GTi	4G61	05/88 ⇨ 05/90
LANCER V 1.8 GTi 16V	4G67	11/89 ⇨ 05/92
ECLIPSE I 2.0 i 16V	4G63(DOHC16V)	04/91 ⇨ 11/95
ECLIPSE I 2.0 i 16V 4WD	4G63(DOHC16V)	04/91 ⇨ 11/95
ECLIPSE I 2.0 Turbo	4G63-T(DOHC16V)	12/89 ⇨ 03/94
ECLIPSE I 2.0 Turbo 4WD	4G63-T(DOHC16V)	12/89 ⇨ 03/94
GALANT VI 2.0 GTi 16V	4G63(DOHC16V)	11/87 ⇨ 10/92
GALANT VI 2.0 GTi 16V 4WD	4G63(DOHC16V)	06/88 ⇨ 10/92
GALANT VI 2.0 GTI 16V 4x4	4G63(DOHC16V)	07/89 ⇨ 12/92
GALANT VI 2.0 GTI 16V Cat 4WD	4G63(DOHC16V)	09/91 ⇨ 10/92

FACET 4.9411 — 07,5

IGNITION CABLE SETS

Adatt./Suitable:

BOSCH
0 986 357 239
HITACHI
134280
NISSAN
22440-2F200
22440-2J210

[03] **Supplied until depletion**

- Fornibile fino ad esaurimento delle scorte
- Fourni jusqu'à épuisement du stock
- Lieferbar solange vorrat reicht
- Suministrado hasta el stock termina

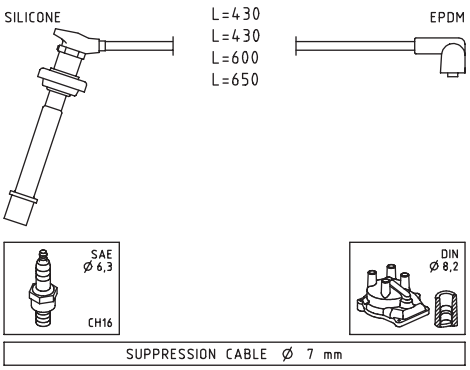

NISSAN		
ALMERA I 2.0 GTi	SR20DE	07/96 ⇨ 03/00
ALMERA TINO 2.0	SR20DE	08/00 ⇨ 01/03
PRIMERA II 2.0	SR20DEL	10/97 ⇨ 06/99
PRIMERA II 2.0 16V	SR20DE	06/96 ⇨ 07/02
PRIMERA II 2.0 GT	SR20DEH	10/97 ⇨ 06/99
PRIMERA I 2.0	SR20DE	07/94 ⇨ 01/98

FACET 4.9413 — 05

IGNITION CABLE SETS

Adatt./Suitable:

[03] **Supplied until depletion**

- Fornibile fino ad esaurimento delle scorte
- Fourni jusqu'à épuisement du stock
- Lieferbar solange vorrat reicht
- Suministrado hasta el stock termina

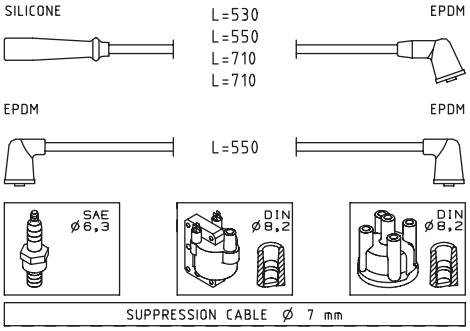

SUZUKI		
ALTO IV 1.0	G10BB	09/94 ⇨ 06/02
ALTO V 1.0	G10BB	01/00 ⇨ 06/02
SWIFT I / II / III 1.3	G13BA	03/89 ⇨ 10/96
SWIFT I / II / III 1.3 GTi SOHC	G13B	10/89 ⇨ 12/95
SWIFT I / II / III 1.3 i	G13BA	09/91 ⇨ 10/96
SJ410 1.0	F10A	09/81 ⇨ 07/91
SWIFT III 1.3 i	G13BA	06/96 ⇨ 03/01

FACET 4.9415 — 07

IGNITION CABLE SETS

Adatt./Suitable:

GENERAL MOTORS
96 058 494
SUZUKI
33700-60A10
33700-60A10-000
33700-60A20
33700-60A20-000

[03] **Supplied until depletion**

- Fornibile fino ad esaurimento delle scorte
- Fourni jusqu'à épuisement du stock
- Lieferbar solange vorrat reicht
- Suministrado hasta el stock termina

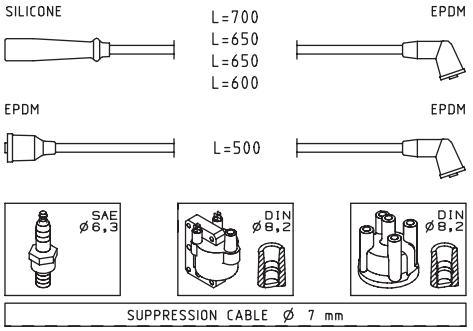

SUZUKI		
SIDEKICK 1.6i [USA]	--	01/89 ⇨ 12/91
VITARA I 1.6 8V	--	01/90 ⇨ 12/94

FACET 4.9417 — 07

IGNITION CABLE SETS

Adatt./Suitable:

SUZUKI
33700-83020
33700-83020-000
33705-83020
33705-83020-000
33710-83020
33710-83020-000

[00] **Eliminated on 25-11-2020. Please verify the availability through our local distributors**

- Eliminato il 25-11-2020. Verificare la disponibilità presso i nostri distributori
- Eliminé le 25-11-2020. Verifier la disponibilité auprès de nos distributeurs sur place
- Am 25-11-2020 gestrichen. Evtl. Verfügbarkeit bitte bei unseren Händlern prüfen
- Eliminado en fecha 25-11-2020. Verificar la disponibilidad a través de nuestros distribuidores locales

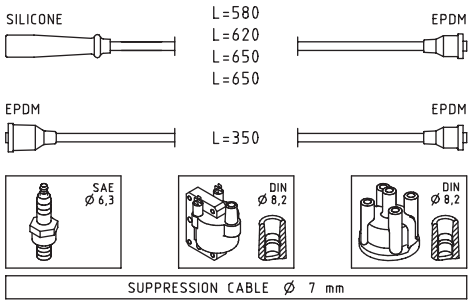

SUZUKI		
SIDEKICK 1.6i [USA]	--	01/91 ⇨

FACET 4.9433 — 07

IGNITION CABLE SETS

Adatt./Suitable:

BOSCH
0 986 356 975
DAEWOO
NP1149

[00] **Eliminated on 14-04-2020. Please verify the availability through our local distributors**
- Eliminato il 14-04-2020. Verificare la disponibilità presso i nostri distributori
- Eliminé le 14-04-2020. Verifier la disponibilité auprès de nos distributeurs sur place
- Am 14-04-2020 gestrichen. Evtl. Verfügbarkeit bitte bei unseren Händlern prüfen
- Eliminado en fecha 14-04-2020. Verificar la disponibilidad a través de nuestros distribuidores locales

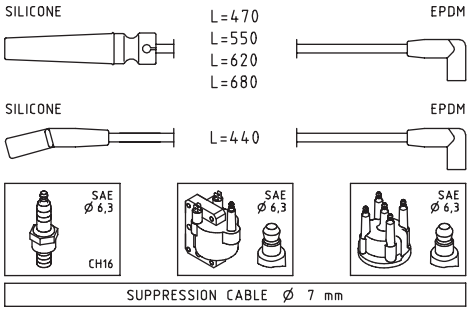

DAEWOO		
ARANOS 1.5	V15L	01/95 ⇨ 11/97
ESPERO 1.5	G15MF	10/97 ⇨ 09/99
ESPERO 1.5 16V	A15MF	02/95 ⇨ 06/99
NEXIA 1.5 16V	A15MF	02/95 ⇨ 08/97

FACET 4.9434 — 07

IGNITION CABLE SETS

Adatt./Suitable:

SUZUKI
33705-51G20
33705-51G20-000

[00] **Eliminated on 14-04-2020. Please verify the availability through our local distributors**
- Eliminato il 14-04-2020. Verificare la disponibilità presso i nostri distributori
- Eliminé le 14-04-2020. Verifier la disponibilité auprès de nos distributeurs sur place
- Am 14-04-2020 gestrichen. Evtl. Verfügbarkeit bitte bei unseren Händlern prüfen
- Eliminado en fecha 14-04-2020. Verificar la disponibilidad a través de nuestros distribuidores locales

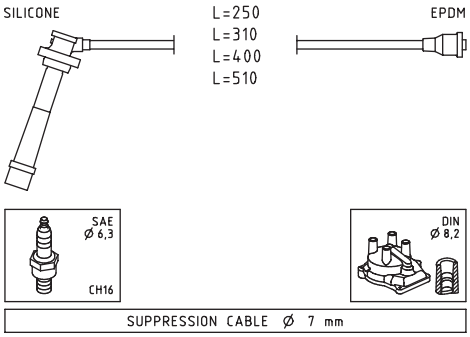

SUZUKI		
BALENO 1.3 16V	G13BB	03/97 ⇨ 05/02
BALENO 1.3 i 16V	G13BB	07/95 ⇨ 05/02
BALENO 1.6 i 16V	G16B	07/95 ⇨ 05/02
BALENO 1.6 i 16V 4x4	G16B	07/95 ⇨ 05/02

FACET 4.9435 — 07

IGNITION CABLE SETS

Adatt./Suitable:

BOSCH
0 986 356 957
MAGNETI MARELLI
941318111188
TOYOTA
90919-22373

[00] **Eliminated on 22-02-2022. Please verify the availability through our local distributors**
- Eliminato il 22-02-2022. Verificare la disponibilità presso i nostri distributori
- Eliminé le 22-02-2022. Verifier la disponibilité auprès de nos distributeurs sur place
- Am 22-02-2022 gestrichen. Evtl. Verfügbarkeit bitte bei unseren Händlern prüfen
- Eliminado en fecha 22-02-2022. Verificar la disponibilidad a través de nuestros distribuidores locales

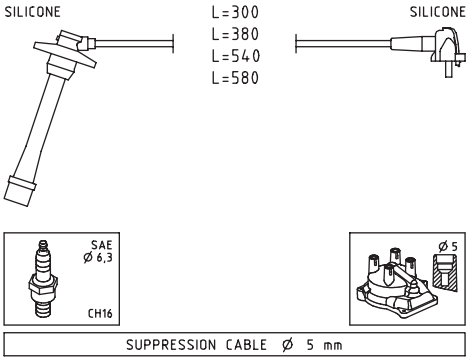

TOYOTA		
COROLLA VII 1.3 XLI	4E-FE	07/92 ⇨ 04/97
COROLLA VII 1.3 XLI 16V	4E-FE	07/92 ⇨ 09/95
PASEO 1.5	5E-FE	06/90 ⇨ 06/99
STARLET 1.3	4E-FE	01/96 ⇨ 07/99

FACET 4.9436 — 05

IGNITION CABLE SETS

Adatt./Suitable:

BOSCH
0 986 357 222
DAIHATSU
19901-87B87-000

[03] **Supplied until depletion**
- Fornibile fino ad esaurimento delle scorte
- Fourni jusqu'à épuisement du stock
- Lieferbar solange vorrat reicht
- Suministrado hasta el stock termina

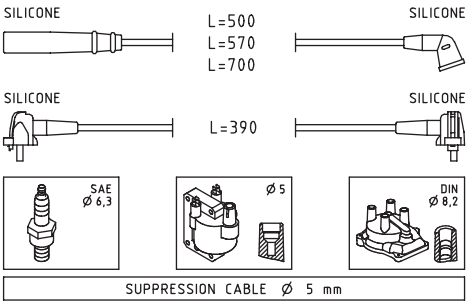

DAIHATSU		
CUORE III 0.8	ED10K	10/90 ⇨ 12/94
CUORE IV 0.8	ED20	01/95 ⇨ 08/98
DOMINO 0.8i	ED20	08/90 ⇨ 10/98
DOMINO 850i	--	01/97 ⇨
MIRA 0.8i	ED20	12/94 ⇨ 02/97
MOVE 0.8	ED20	01/97 ⇨ 11/99

FACET 4.9443 — 07

IGNITION CABLE SETS

Adatt./Suitable:

RENAULT
77 00 273 226

[00] **Eliminated on 07-01-2020. Please verify the availability through our local distributors**
- Eliminato il 07-01-2020. Verificare la disponibilità presso i nostri distributori
- Eliminé le 07-01-2020. Verifier la disponibilité auprès de nos distributeurs sur place
- Am 07-01-2020 gestrichen. Evtl. Verfügbarkeit bitte bei unseren Händlern prüfen
- Eliminado en fecha 07-01-2020. Verificar la disponibilidad a través de nuestros distribuidores locales

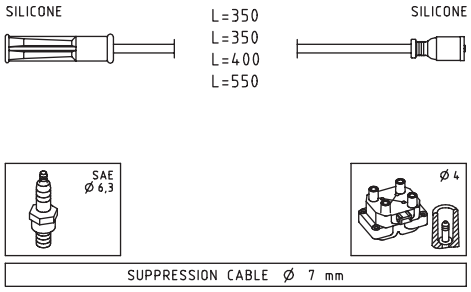

RENAULT		
CLIO II 1.4	E7J780	09/98 ⇨ 05/05
CLIO II 1.6	K7M744, K7M745	09/98 ⇨ 05/05
KANGOO I 1.4	E7J780	08/97 ⇨
MEGANE I 1.6 e	K7M702, K7M703	01/96 ⇨ 08/03
MEGANE I 1.6 i	K7M720	01/96 ⇨ 03/99
MEGANE SCÉNIC I 1.6 e	K7M702, K7M703	10/96 ⇨ 10/99
MEGANE SCÉNIC I 1.6 i	K7M720	01/97 ⇨ 09/99

FACET 4.9446 — 07

IGNITION CABLE SETS

Adatt./Suitable:

BOSCH
0 986 357 211
0 986 357 252
HITACHI
134464
RENAULT
77 00 866 923

[03] **Supplied until depletion**
- Fornibile fino ad esaurimento delle scorte
- Fourni jusqu'à épuisement du stock
- Lieferbar solange vorrat reicht
- Suministrado hasta el stock termina

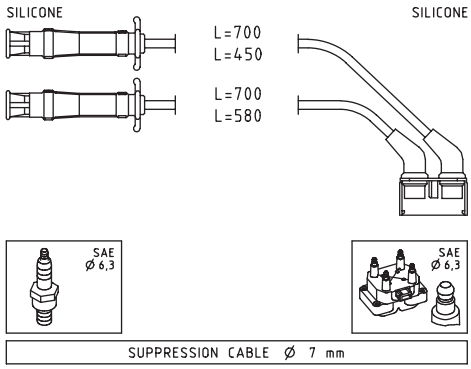

RENAULT		
MEGANE I 1.6 e	K7M702, K7M703, K7M790	01/96 ⇨ 08/03
MEGANE I 1.6 i	K7M720	01/96 ⇨ 03/99
MEGANE SCÉNIC I 1.6 e	K7M702, K7M703	10/96 ⇨ 10/99
MEGANE SCÉNIC I 1.6 i	K7M720	01/97 ⇨ 09/99

FACET 4.9447 — 07

IGNITION CABLE SETS

Adatt./Suitable:

RENAULT
77 00 107 662
77 00 874 109

[00] **Eliminated on 26-01-2021. Please verify the availability through our local distributors**

- Eliminato il 26-01-2021. Verificare la disponibilità presso i nostri distributori
- Eliminé le 26-01-2021. Verifier la disponibilité auprès de nos distributeurs sur place
- Am 26-01-2021 gestrichen. Evtl. Verfügbarkeit bitte bei unseren Händlern prüfen
- Eliminado en fecha 26-01-2021. Verificar la disponibilidad a través de nuestros distribuidores locales

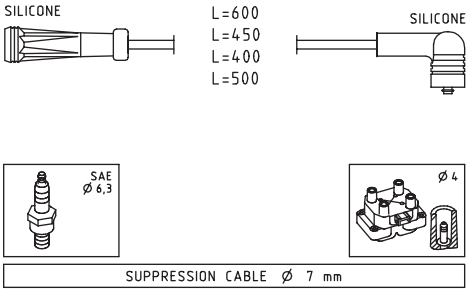

RENAULT		
CLIO I 1.2	D7F730	01/96 ⇨ 09/98
CLIO II 1.2	D7F710, D7F720, D7F722, D7F726, D7F766	09/98 ⇨
CLIO II 1.2 LPG	D7F722, D7F766	09/98 ⇨ 06/09
KANGOO I 1.2	D7F710, D7F720, D7F722, D7F726, D7F744, D7F746	08/97 ⇨
TWINGO I 1.2	D7F700, D7F701, D7F702, D7F703, D7F704, D7F706	05/96 ⇨

FACET 4.9451 — 07

IGNITION CABLE SETS

Adatt./Suitable:

BOSCH
0 986 357 816

FIAT
46749624
55202897
55203737

HITACHI
134272

LANCIA
46749624
55202897

MAGNETI MARELLI
941095100582
941318111161

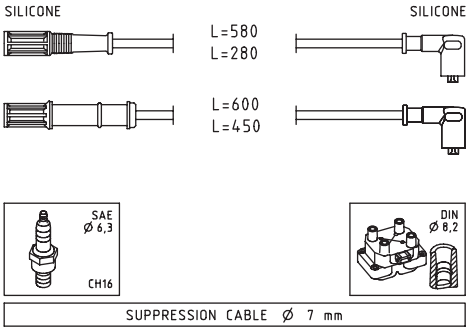

FIAT		
DOBLO I 1.2	223A5.000	03/01 ⇨
PALIO 1.0	178A1.000	04/96 ⇨ 10/03
PALIO 1.0 GLX	--	07/98 ⇨ 10/03
PALIO 1.1	187A1.000	06/06 ⇨
PALIO 1.2	176A8.000, 178B5.000, 178B7.045, 178C4.066, 178E2.000, 188A4.000	04/96 ⇨
PALIO 1.2 75	178B7.045	03/98 ⇨
PALIO 1.2 MPI	178C4.066	01/02 ⇨
PANDA I 1.1	187A1.000	09/00 ⇨ 02/04
PANDA I 1.1 AWD	187A1.000	09/00 ⇨ 02/04
PANDA I 1100	187A1.000	02/95 ⇨ 09/03
PANDA I 1100 i.e. 4x4	187A1.000	12/00 ⇨
PANDA II 1.1	--	09/03 ⇨
PANDA II 1.2	188A4.000	09/03 ⇨
PANDA II 1.2 4x4	188A4.000	09/04 ⇨
PANDA II 1.2 Bi-Power / Natural Power	--	04/09 ⇨
PANDA II 1.2 Euro 4	--	04/09 ⇨
PANDA II 1.2 LPG	188A4.000	04/09 ⇨
PANDA II 1.2 Natural Power	188A4.000	01/07 ⇨ 12/11
PUNTO II 1.2 60	188A4.000	09/99 ⇨ 12/10
PUNTO II 1.2 Bifuel	188A4.000	08/07 ⇨ 03/12
PUNTO II 1.2 Natural Power	188A4.000	09/03 ⇨ 03/12
SEICENTO / 600 1.1	187A1.000	01/98 ⇨ 01/10
SIENA 1.2	178B7.045	01/98 ⇨
SIENA 1.3	178B5.000, 178C4.066, 188A4.000, 188A5.000	09/01 ⇨ 12/12
STRADA 1.2	178B5.000, 178B7.045, 188A4.000	04/03 ⇨
STRADA 1.2 Trekking	--	11/05 ⇨

LANCIA		
Y I 1.2	188A4.000	03/96 ⇨ 09/03
YPSILON II 1.2	169A4.000, 188A4.000	10/03 ⇨ 12/11

FACET 4.9479 — 07

IGNITION CABLE SETS

Adatt./Suitable:

[00] **Eliminated on 19-01-2022. Please verify the availability through our local distributors**

- Eliminato il 19-01-2022. Verificare la disponibilità presso i nostri distributori
- Eliminé le 19-01-2022. Verifier la disponibilité auprès de nos distributeurs sur place
- Am 19-01-2022 gestrichen. Evtl. Verfügbarkeit bitte bei unseren Händlern prüfen
- Eliminado en fecha 19-01-2022. Verificar la disponibilidad a través de nuestros distribuidores locales

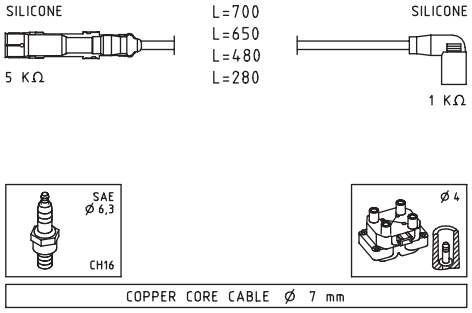

AUDI		
A3 I 1.6	AEH, AKL	09/96 ⇨ 05/03

SKODA		
OCTAVIA I 1.6	AEH, AKL	02/97 ⇨ 12/07

VW		
GOLF IV 1.6	AEH, AKL	05/01 ⇨ 05/04

FACET 4.9484 — 07

IGNITION CABLE SETS

Adatt./Suitable:

[00] **Eliminated on 18-11-2019. Please verify the availability through our local distributors**

- Eliminato il 18-11-2019. Verificare la disponibilità presso i nostri distributori
- Eliminé le 18-11-2019. Verifier la disponibilité auprès de nos distributeurs sur place
- Am 18-11-2019 gestrichen. Evtl. Verfügbarkeit bitte bei unseren Händlern prüfen
- Eliminado en fecha 18-11-2019. Verificar la disponibilidad a través de nuestros distribuidores locales

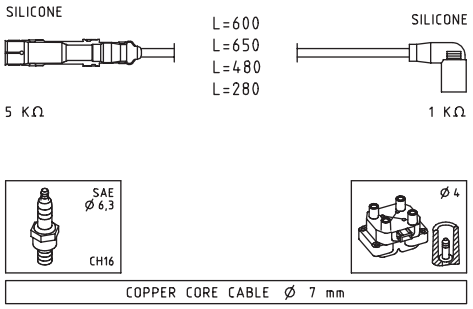

AUDI		
A3 I 1.6	AEH, AKL, APF	09/96 ⇨ 05/03

SEAT		
CORDOBA I 1.6 i	AKL	07/96 ⇨ 10/02
IBIZA II 1.6 i	AKL	04/96 ⇨ 02/02
LEON I 1.6	AEH, AKL	11/99 ⇨ 06/06
TOLEDO II 1.6	AEH, AKL, APF	10/98 ⇨ 07/04

SKODA		
OCTAVIA I 1.6	AEH, AKL	02/97 ⇨ 12/07

VOLKSWAGEN (BR)		
GOLF A4 1.6i	AKL	10/99 ⇨

VW		
BORA 1.6	AEH, AKL, APF	10/98 ⇨ 05/05
GOLF IV 1.6	AEH, AKL, APF	05/01 ⇨ 05/04
POLO III 1.6	AEH, AKL	05/97 ⇨ 09/01
POLO III 100 1.6	AEH, AKL	12/95 ⇨ 09/01

FACET 4.9489 — 09

IGNITION CABLE SETS

Adatt./Suitable:

[03] **Supplied until depletion**

- Fornibile fino ad esaurimento delle scorte
- Fourni jusqu'à épuisement du stock
- Lieferbar solange vorrat reicht
- Suministrado hasta el stock termina

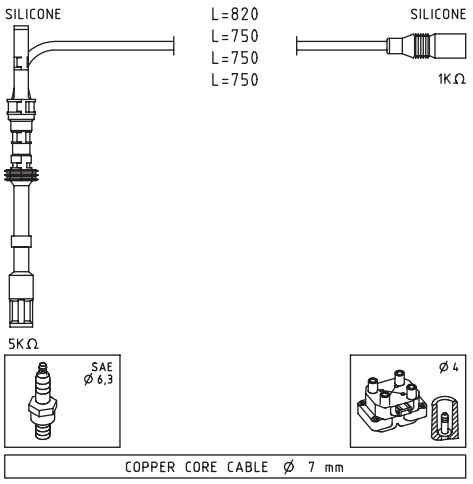

AUDI		
A3 I 1.8	AGN, APG	09/96 ⇨ 05/03

SEAT		
LEON I 1.8 20V	AGN, APG	11/99 ⇨ 06/06
TOLEDO II 1.8 20V	AGN, APG	10/98 ⇨ 07/04
SKODA		
OCTAVIA I 1.8	AGN	09/96 ⇨ 07/00
OCTAVIA I 1.8 20V	AGN	07/98 ⇨ 07/00
VW		
BORA 1.8	AGN	10/98 ⇨ 05/05
BORA 1.8 4motion	AGN	02/99 ⇨ 05/05
GOLF IV 1.8	AGN	08/97 ⇨ 06/05
GOLF IV 1.8 4motion	AGN	05/98 ⇨ 06/06

FACET 4.9491

07

IGNITION CABLE SETS

Adatt./Suitable:

[03] **Supplied until depletion**
- Fornibile fino ad esaurimento delle scorte
- Fourni jusqu'à épuisement du stock
- Lieferbar solange vorrat reicht
- Suministrado hasta el stock termina

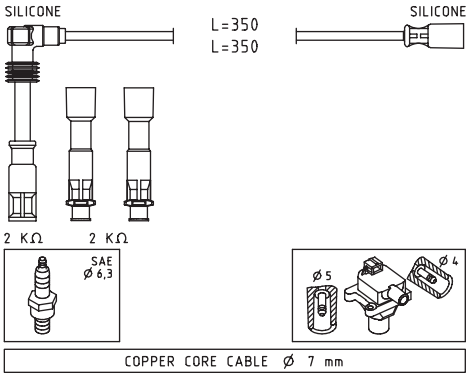

COPPER CORE CABLE Ø 7 mm

AUDI		
A6 I 1.8 quattro	ADR	12/95 ⇨ 12/97
A4 I 1.8	ADR, AFY, APT, ARG, AVV	11/94 ⇨ 09/01
A4 I 1.8 quattro	ADR, AFY, APT, ARG	01/95 ⇨ 09/01
A6 II 1.8	AFY	05/97 ⇨ 01/05
CABRIOLET 1.8	ADR	01/97 ⇨ 08/00
VW		
PASSAT IV 1.8	ADR, AFY, APT, ARG	10/96 ⇨ 03/05
PASSAT IV 1.8 Syncro/4motion	ADR, APT, ARG	12/96 ⇨ 11/00

FACET 4.9492

07

IGNITION CABLE SETS

Adatt./Suitable:

BOSCH
0 986 356 967
RENAULT
77 00 106 221

[00] **Eliminated on 10-06-2019. Please verify the availability through our local distributors**
- Eliminato il 10-06-2019. Verificare la disponibilità presso i nostri distributori
- Eliminé le 10-06-2019. Verifier la disponibilité auprès de nos distributeurs sur place
- Am 10-06-2019 gestrichen. Evtl. Verfügbarkeit bitte bei unseren Händlern prüfen
- Eliminado en fecha 10-06-2019. Verificar la disponibilidad a través de nuestros distribuidores locales

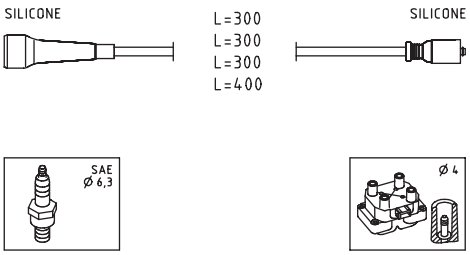

SUPPRESSION CABLE Ø 7 mm

RENAULT		
ESPACE III 2.0	F3R728, F3R729, F3R742, F3R768, F3R769	11/96 ⇨ 10/00

RENAULT		
LAGUNA I 1.8	F3P670, F3P674, F3P676, F3P678	06/95 ⇨ 03/01
LAGUNA I 2.0	--, F3R611, F3R728, F3R729, F3R768, F3R769	11/93 ⇨ 03/01
MEGANE I 2.0	F3R750, F3R751, F3R752, F3R791, F3R796, F3R797, F3R798	04/97 ⇨ 08/03
MEGANE I 2.0 i	F3R750, F3R751, F3R752, F3R791, F3R796, F3R797, F3R798	01/96 ⇨ 08/03
MEGANE SCÉNIC I 2.0 i	F3R750, F3R751, F3R796	01/97 ⇨ 09/99
MEGANE SCÉNIC I 2.0 RXE 4x4	F3R750	05/97 ⇨ 10/99
SCÉNIC I 2.0	F3R791, F3R797, F3R798	09/99 ⇨ 08/03

FACET 4.9497

07

IGNITION CABLE SETS

Adatt./Suitable:

[03] **Supplied until depletion**
- Fornibile fino ad esaurimento delle scorte
- Fourni jusqu'à épuisement du stock
- Lieferbar solange vorrat reicht
- Suministrado hasta el stock termina

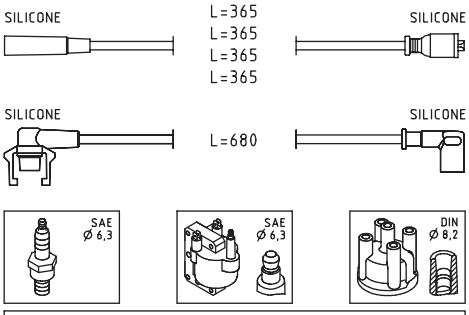

SUPPRESSION CABLE Ø 7 mm

RENAULT		
CLIO I 1.2	C3G720	06/94 ⇨ 02/98

FACET 4.9499

07

IGNITION CABLE SETS

Adatt./Suitable:

[03] **Supplied until depletion**
- Fornibile fino ad esaurimento delle scorte
- Fourni jusqu'à épuisement du stock
- Lieferbar solange vorrat reicht
- Suministrado hasta el stock termina

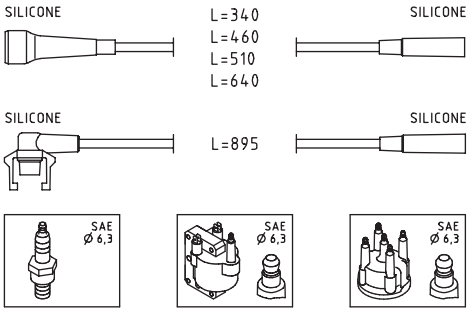

SUPPRESSION CABLE Ø 7 mm

RENAULT		
LAGUNA I 1.8	F3P678, F3P720, F3P724	11/93 ⇨ 03/01
LAGUNA I 2.0	6Z7U730, F3R722	11/93 ⇨ 03/01

FACET 4.9501

07

IGNITION CABLE SETS

Adatt./Suitable:

BOSCH
0 986 357 210
RENAULT
77 00 874 564

[00] **Eliminated on 16-06-2020. Please verify the availability through our local distributors**
- Eliminato il 16-06-2020. Verificare la disponibilità presso i nostri distributori
- Eliminé le 16-06-2020. Verifier la disponibilité auprès de nos distributeurs sur place
- Am 16-06-2020 gestrichen. Evtl. Verfügbarkeit bitte bei unseren Händlern prüfen
- Eliminado en fecha 16-06-2020. Verificar la disponibilidad a través de nuestros distribuidores locales

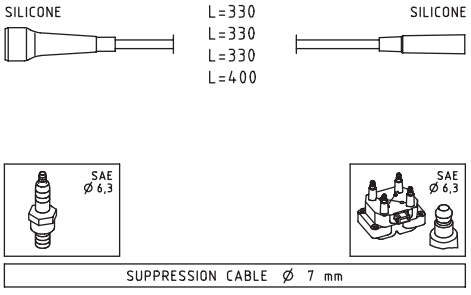

SUPPRESSION CABLE Ø 7 mm

RENAULT		
ESPACE III 2.0	F3R728, F3R768, F3R769	11/96 ⇨ 10/00
LAGUNA I 1.8	F3P670, F3P674, F3P676, F3P678	06/95 ⇨ 03/01
LAGUNA I 2.0	--, F3R728, F3R729, F3R768, F3R769	11/93 ⇨ 03/01
MEGANE I 2.0	F3R262, F3R264, F3R750, F3R751, F3R752, F3R791, F3R797, F3R798	01/97 ⇨ 08/03
MEGANE I 2.0 i	F3R750, F3R751, F3R752, F3R791, F3R797, F3R798	01/96 ⇨ 08/03
MEGANE SCÉNIC I 2.0 i	F3R750, F3R751	01/97 ⇨ 09/99
MEGANE SCÉNIC I 2.0 RXE 4x4	F3R750	05/97 ⇨ 10/99
SCÉNIC I 2.0	F3R791, F3R797, F3R798	09/99 ⇨ 08/03

FACET 4.9503

09

IGNITION CABLE SETS

Adatt./Suitable:

BOSCH
0 986 357 261
FIAT
46413088
HITACHI
134518
LANCIA
46413088
MAGNETI MARELLI
941095800618

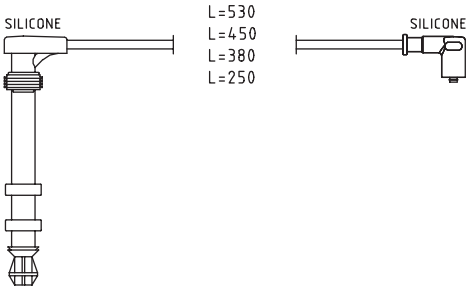

SUPPRESSION CABLE Ø 7 mm

FIAT		
BRAVA 1.6 16V	182A4.000, 182A4.027, 182A6.000, 182B6.000	10/95 ⇨ 12/02
BRAVO I 1.6	182B6.000	09/00 ⇨ 10/01
BRAVO I 1.6 16V	178A8.011, 182A4.000, 182A6.000	10/95 ⇨ 10/01
DOBLO I 1.6 Natural Power	182B6.000	09/02 ⇨

FIAT		
MAREA 1.6	182B6.000, 185A3.000	09/00 ⇨ 08/02
MAREA 1.6 100 16V	182A4.000	09/96 ⇨ 05/02
MAREA 1.6 100 16V Bipower	185A3.000	04/99 ⇨ 05/02
MAREA 1.6 16V	185A3.000	04/97 ⇨ 02/99
MAREA 1.6 SX	182B5.098	09/00 ⇨ 08/02
MULTIPLA 1.6	182B6.000	09/00 ⇨ 06/10
MULTIPLA 1.6 100 16V	182A4.000	04/99 ⇨ 06/10
MULTIPLA 1.6 16V	182B6.000	04/02 ⇨ 06/10
MULTIPLA 1.6 16V Bipower	182B6.000, 186A4.000	10/01 ⇨ 06/10
MULTIPLA 1.6 16V Blupower	186A3.000	04/99 ⇨ 06/10
MULTIPLA 1.6 16V GPL	182B6.000	10/01 ⇨ 06/10
PALIO 1.6	178D2.011	07/97 ⇨
PALIO 1.6 16V	178B3.000, 178C7.098, 178D2.011, 182B6.000	02/01 ⇨
SIENA 1.6	182B6.000	11/00 ⇨ 12/12
SIENA 1.6 16V	178B3.000	09/98 ⇨
STRADA 1.6 MPI	178D2.011	07/05 ⇨
FIAT (BR)		
BRAVA 1.6i 16v	1.6Mpi	01/00 ⇨
PALIO 1.6i	1.6Mpi	01/99 ⇨ 12/00
PALIO 1.6i 16v	1.6Mpi16v	01/96 ⇨
SIENA 1.6i 16v	1.6Mpi	01/98 ⇨ 12/99
STRADA 1.6i 16v	1.6Mpi	01/99 ⇨
LANCIA		
DEDRA 1.6 16V	182A4.000	01/96 ⇨ 07/99
DELTA II 1.6 i.e.	182A6.000	03/96 ⇨ 08/99
DELTA II 1.6 i.e. 16V	182A4.000	01/96 ⇨ 08/99
LYBRA 1.6	182B6.000	10/00 ⇨ 10/05
LYBRA 1.6 16V	182A4.000	07/99 ⇨ 10/05

FACET 4.9504 — 07,5

IGNITION CABLE SETS

Adatt./Suitable:

BOSCH
0 986 357 258
FIAT
46425912
HITACHI
134332
LANCIA
46425912
MAGNETI MARELLI
941095910629

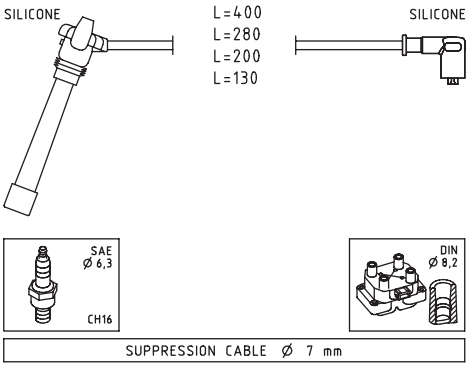

FIAT		
PUNTO I 1.2 16V	176B9.000	04/97 ⇨ 09/99
PUNTO I 85 16V 1.2	176B9.000	04/97 ⇨ 06/00
LANCIA		
Y I 1.2 16V	176B9.000	04/97 ⇨ 09/03

FACET 4.9505 — 07,5

IGNITION CABLE SETS

Adatt./Suitable:

BOSCH
0 986 357 181
F 000 99C 122
FIAT
46474814
46743086
HITACHI
134333
LANCIA
46474814
MAGNETI MARELLI
941095980634

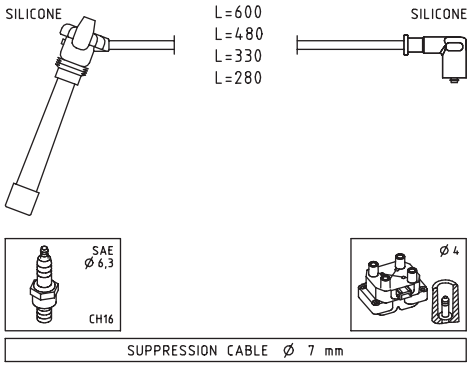

FIAT		
BRAVA 1.2 16V	182B2.000	12/98 ⇨ 12/02
BRAVA 1.2 16V 80	182B2.000, 188A5.000	10/00 ⇨ 12/02
BRAVO I 1.2 16V 80	182B2.000, 188A5.000	10/00 ⇨ 10/01
MAREA 1.2 16V	182B2.000	10/98 ⇨ 05/02
PALIO 1.2	188A5.000	09/01 ⇨ 10/04
PALIO 1.2 16V	178D7.055	06/05 ⇨
PUNTO II 1.2 16V	188A5.000	06/03 ⇨
PUNTO II 1.2 16V 80	188A5.000	09/99 ⇨ 04/06
SIENA 1.2 16V	178D7.055	01/02 ⇨
FIAT (BR)		
PALIO 1.0i 16v	1.0Mpi16vFire	01/01 ⇨
PALIO 1.3i 16v	1.3Mpi16vFire	01/00 ⇨
SIENA 1.3i 16v	1.3MpiFire	01/00 ⇨ 12/00
LANCIA		
Y I 1.2 16V	188A5.000	10/00 ⇨ 09/03

FACET 4.9506 — 07,5

IGNITION CABLE SETS

Adatt./Suitable:

GENERAL MOTORS
09 119 169
9 193 022
OPEL
16 12 001
16 12 013
16 12 646

00 Eliminated on 22-02-2021. Please verify the availability through our local distributors

- Eliminato il 22-02-2021. Verificare la disponibilità presso i nostri distributori
- Eliminé le 22-02-2021. Verifier la disponibilité auprès de nos distributeurs sur place
- Am 22-02-2021 gestrichen. Evtl. Verfügbarkeit bitte bei unseren Händlern prüfen
- Eliminado en fecha 22-02-2021. Verificar la disponibilidad a través de nuestros distribuidores locales

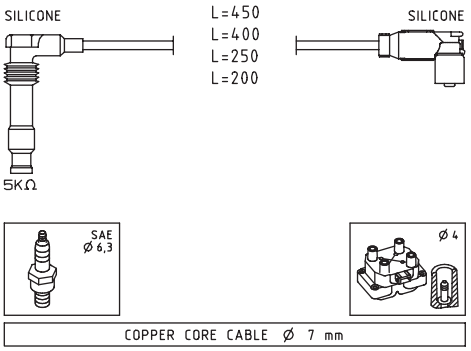

OPEL		
ASTRA F 1.8 i 16V	C18SEL, C18XE, C18XEL, X18XE	06/93 ⇨ 03/01
ASTRA F 2.0 i 16V	X20XEV	02/95 ⇨ 08/00
CALIBRA A 2.0 i 16V	X20XEV	02/94 ⇨ 07/97
CALIBRA A 2.0 i 16V 4x4	X20XEV	02/94 ⇨ 07/97
VECTRA B 1.8 i 16V	X18XE	10/95 ⇨ 09/00
VECTRA B 2.0 i 16V	C20SEL, X20XEV	09/95 ⇨ 06/00
VAUXHALL		
ASTRA III 1.8	C18XE	09/94 ⇨ 08/96
ASTRA III 1.8 16V	C18XEL, X18XE	11/94 ⇨ 03/01
ASTRA III 1.8 i 16V	C18XE, C18XEL, X18XE	06/93 ⇨ 02/98
ASTRA III 2.0 i 16V	X20XEV	01/94 ⇨ 09/98
CALIBRA 2.0 i 16V	X20XEV	06/90 ⇨ 07/97
CALIBRA 2.0 i 16V 4x4	X20XEV	02/94 ⇨ 07/97
VECTRA B 1.8 i 16V	X18XE	10/95 ⇨ 09/00
VECTRA B 2.0 i 16V	X20XEV	10/95 ⇨ 01/01

FACET 4.9507 — 07,5

IGNITION CABLE SETS

Adatt./Suitable:

BOSCH
0 986 357 270
CHRYSLER
4883233
4883233AB

03 Supplied until depletion

- Fornibile fino ad esaurimento delle scorte
- Fourni jusqu'à épuisement du stock
- Lieferbar solange vorrat reicht
- Suministrado hasta el stock termina

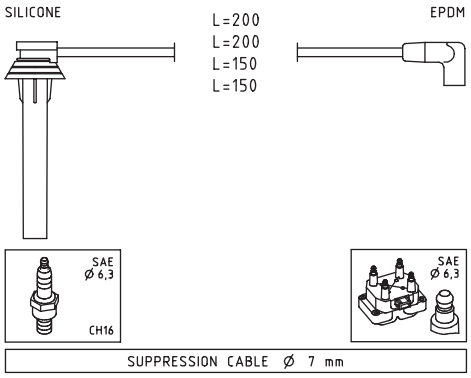

CHRYSLER		
CIRRUS 2.0 LX	ECB	10/97 ⇨ 09/00
NEON I 1.8 16V	EBD	09/97 ⇨ 08/99
NEON I 2.0 16V	420H	05/94 ⇨ 08/99
NEON II 2.0 16V	420H	08/99 ⇨ 12/06
SEBRING I 2.0	ECB	05/95 ⇨ 09/00
SEBRING II 2.0	ECC	04/01 ⇨ 06/07
STRATUS 2.0 16V	ECB	12/95 ⇨ 04/01
STRATUS 2.0 LE	420X	12/95 ⇨ 04/01
VOYAGER II 2.0 i	C00	01/95 ⇨ 03/01

FACET 4.9508 — 07,5

IGNITION CABLE SETS

Adatt./Suitable:

BOSCH
0 986 357 270
CHRYSLER
4773841

[00] **Eliminated on 14-04-2020. Please verify the availability through our local distributors**
- Eliminato il 14-04-2020. Verificare la disponibilità presso i nostri distributori
- Eliminé le 14-04-2020. Verifier la disponibilité auprès de nos distributeurs sur place
- Am 14-04-2020 gestrichen. Evtl. Verfügbarkeit bitte bei unseren Händlern prüfen
- Eliminado en fecha 14-04-2020. Verificar la disponibilidad a través de nuestros distribuidores locales

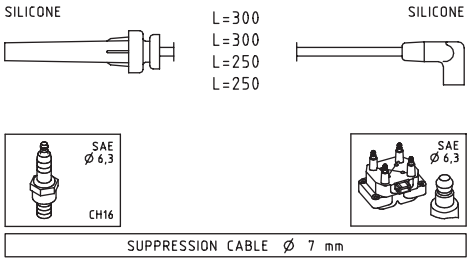

CHRYSLER		
CIRRUS 2.4 LX	EDZ	05/94 ⇨ 09/00
NEON I 2.0	ECC	10/96 ⇨ 09/00
NEON I 2.0 16V	420T, ECC	06/94 ⇨ 08/99
SEBRING I 2.4	EDZ	03/96 ⇨ 09/00
STRATUS 2.4 16 V	EDZ	12/95 ⇨ 04/01
STRATUS 2.4 16V	EDZ	12/95 ⇨ 04/01
VOYAGER II 2.4 i	B00	01/95 ⇨ 03/01

FACET 4.9509 — 07,5

IGNITION CABLE SETS

Adatt./Suitable:

CHEVROLET
96450249
DAEWOO
96450249
HITACHI
134119

[03] **Supplied until depletion**
- Fornibile fino ad esaurimento delle scorte
- Fourni jusqu'à épuisement du stock
- Lieferbar solange vorrat reicht
- Suministrado hasta el stock termina

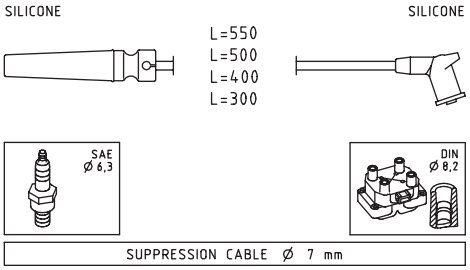

CHEVROLET		
LACETTI 1.4	F14D3	03/05 ⇨
LACETTI 1.4 16V	F14D3	03/05 ⇨ 03/13
LACETTI 1.6	F16D3	03/05 ⇨
NUBIRA 1.4	F14D3	01/05 ⇨ 12/08
NUBIRA 1.6	F16D3, LXT	03/05 ⇨
OPTRA 1.4 16V	F14D3	03/05 ⇨
OPTRA 1.6	F16D3, LXT	08/03 ⇨ 12/08
OPTRA 1.6 SRV	F16D3	06/06 ⇨
DAEWOO		
LACETTI 1.4	F14D3	02/04 ⇨
LACETTI 1.6	F16D3	02/04 ⇨
NUBIRA II 1.4	F14D3	10/03 ⇨ 12/04
NUBIRA II 1.6	F16D3	07/03 ⇨

FACET 4.9511 — 07

IGNITION CABLE SETS

Adatt./Suitable:

CHRYSLER
5018394AE

[03] **Supplied until depletion**
- Fornibile fino ad esaurimento delle scorte
- Fourni jusqu'à épuisement du stock
- Lieferbar solange vorrat reicht
- Suministrado hasta el stock termina

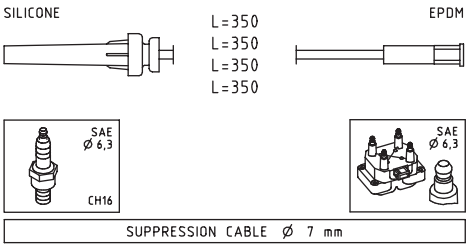

CHRYSLER		
PT CRUISER 2.0	ECC	06/00 ⇨ 09/04
PT CRUISER 2.4	EDZ	03/04 ⇨ 03/08
SEBRING II 2.0	ECC	04/01 ⇨ 06/07
SEBRING II 2.4	EDZ	04/01 ⇨ 06/07
VOYAGER III 2.4	EDZ	02/00 ⇨ 12/08

FACET 4.9518 — 07

IGNITION CABLE SETS

Adatt./Suitable:

[00] **Eliminated on 22-02-2022. Please verify the availability through our local distributors**
- Eliminato il 22-02-2022. Verificare la disponibilità presso i nostri distributori
- Eliminé le 22-02-2022. Verifier la disponibilité auprès de nos distributeurs sur place
- Am 22-02-2022 gestrichen. Evtl. Verfügbarkeit bitte bei unseren Händlern prüfen
- Eliminado en fecha 22-02-2022. Verificar la disponibilidad a través de nuestros distribuidores locales

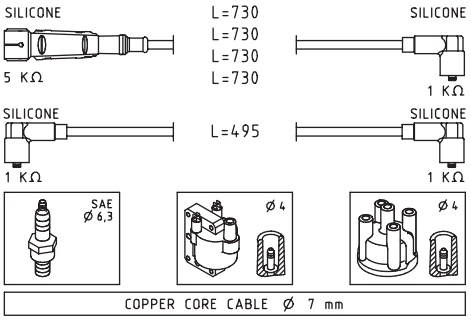

VW		
POLO II 1.0	AAU, HZ	01/85 ⇨ 09/94
POLO II 1.0 Cat	AAU, ACM	08/89 ⇨ 09/94
POLO II 1.3	3F	10/90 ⇨ 09/94
POLO II 1.3 Cat	2G, 3F, AAV, MH, NZ	07/87 ⇨ 09/94
POLO II 1.3 G40	PY	08/90 ⇨ 09/94

FACET 4.9527 — 07

IGNITION CABLE SETS

Adatt./Suitable:

FIAT
46448661

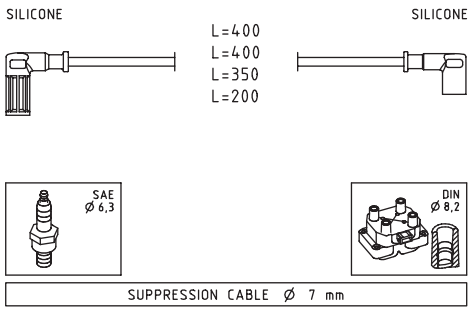

FIAT		
PANDA I 900	1170A1.046	04/92 ⇨ 12/96
PANDA I 900 i.e.	1170A1.046	01/98 ⇨

FACET 4.9529 — 07,5

IGNITION CABLE SETS

Adatt./Suitable:

GENERAL MOTORS
90 510 857
90 510 858
90 542 968
HITACHI
134246
MAGNETI MARELLI
941125380688
941318111140
OPEL
16 12 606
16 12 607
16 12 639

[03] **Supplied until depletion**
- Fornibile fino ad esaurimento delle scorte
- Fourni jusqu'à épuisement du stock
- Lieferbar solange vorrat reicht
- Suministrado hasta el stock termina

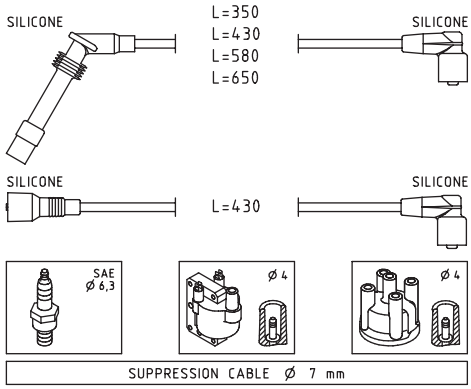

OPEL		
ASTRA F 1.4	14NV	09/91 ⇨ 09/93
ASTRA F 1.4 i	C14NZ	09/91 ⇨ 01/05
COMBO B 1.4	C14NZ	07/94 ⇨ 10/01
CORSA B 1.4 i	C14NZ	03/93 ⇨ 09/00
VAUXHALL		
ASTRA III 1.4	14NV	09/91 ⇨ 09/93
ASTRA III 1.4 i	C14NZ	09/91 ⇨ 09/98
ASTRA III 1.4 S	14NV	09/91 ⇨ 02/98
ASTRAVAN I 1.4 i	C14NZ	09/91 ⇨ 08/95
COMBO B 1.4	C14NZ	07/94 ⇨ 10/01
CORSA B 1.4 i	C14NZ	03/93 ⇨ 09/00
CORSAVAN I 1.4 i	C14NZ	01/94 ⇨ 09/00

FACET 4.9531 — 07

IGNITION CABLE SETS

Adatt./Suitable:

BOSCH
0 986 357 226
GENERAL MOTORS
90 510 851
HITACHI
134234
134275
MAGNETI MARELLI
941125360686
OPEL
16 12 608

[03] **Supplied until depletion**
- Fornibile fino ad esaurimento delle scorte
- Fourni jusqu'à épuisement du stock
- Lieferbar solange vorrat reicht
- Suministrado hasta el stock termina

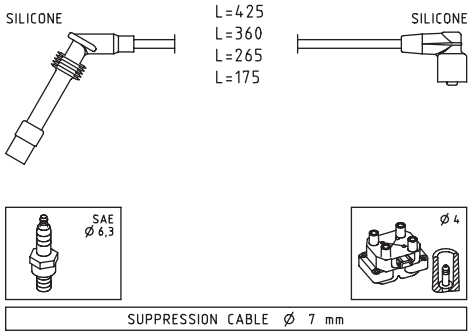

OPEL		
ASTRA F 1.4	14SE	09/92 ⇨ 09/98
ASTRA F 1.4 Si	C14SE	03/92 ⇨ 03/01
ASTRA F 1.6	16NZR	09/95 ⇨ 09/98
ASTRA F 1.6 i	X16SZ, X16SZR	09/91 ⇨ 01/05
ASTRA F 1.6 Si	C16SE	03/92 ⇨ 12/94
VECTRA A 1.6 i	X16SZ	09/93 ⇨ 11/95
VECTRA B 1.6 i	X16SZR	10/95 ⇨ 07/03
VAUXHALL		
ASTRA III 1.4 i	C14SE	03/91 ⇨ 03/01
ASTRA III 1.6	C16SE	03/94 ⇨ 08/95
ASTRA III 1.6 i	C16SE, X16SZ, X16SZR	03/92 ⇨ 09/98
ASTRA III 1.6 Si	C16SE	03/91 ⇨ 12/94
ASTRAVAN I 1.6 i	X16SZ	09/94 ⇨ 08/96
VECTRA B 1.6 i	X16SZR	08/95 ⇨ 03/02

FACET 4.9549 — 07

IGNITION CABLE SETS

Adatt./Suitable:

[00] **Eliminated on 11-03-2021. Please verify the availability through our local distributors**
- Eliminato il 11-03-2021. Verificare la disponibilità presso i nostri distributori
- Eliminé le 11-03-2021. Verifier la disponibilité auprès de nos distributeurs sur place
- Am 11-03-2021 gestrichen. Evtl. Verfügbarkeit bitte bei unseren Händlern prüfen
- Eliminado en fecha 11-03-2021. Verificar la disponibilidad a través de nuestros distribuidores locales

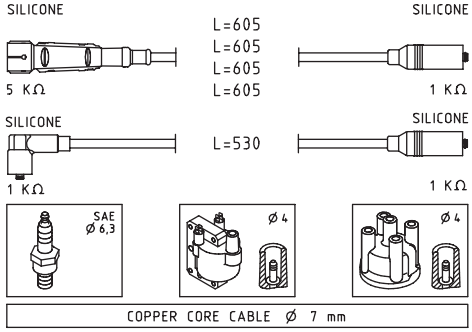

SEAT		
CORDOBA I 1.8 i	ACC	02/93 ⇨ 09/02
VW		
GOLF III 1.8	AAM, ADZ	08/91 ⇨ 04/99
GOLF III 1.8 Syncro	ADZ	01/93 ⇨ 04/99
GOLF III 2.0	ADY, AEP, AGG, AKR	11/91 ⇨ 04/99
VW		
GOLF III 2.0 GL	AEP	08/95 ⇨ 09/97
GOLF III 2.0 Syncro	AGG	08/95 ⇨ 04/99
GOLF IV 1.8	AAM, ANN, ANP	06/98 ⇨ 06/02
POLO III 90 1.8	ADD	01/97 ⇨ 09/01
VENTO 1.6	AEA	09/92 ⇨ 09/98
VENTO 1.8	AAM, ADZ, ANP	11/91 ⇨ 02/99
VENTO 2.0	ADY, AGG	11/91 ⇨ 09/98
VENTO 2.0 GL	AEP	05/96 ⇨ 12/97

FACET 4.9551 — 07

IGNITION CABLE SETS

Adatt./Suitable:

[03] **Supplied until depletion**
- Fornibile fino ad esaurimento delle scorte
- Fourni jusqu'à épuisement du stock
- Lieferbar solange vorrat reicht
- Suministrado hasta el stock termina

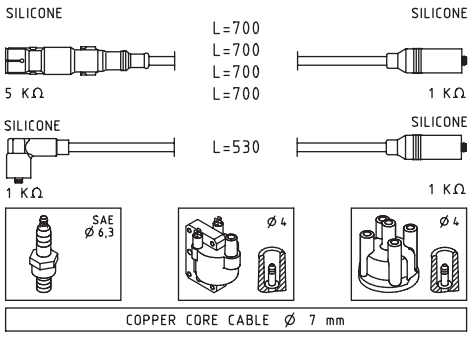

VW		
GOLF III 1.6	AEK	07/94 ⇨ 04/99
PASSAT III 1.6	AEK	07/94 ⇨ 08/96
POLO III 2.0	ADC	08/99 ⇨ 09/01
VENTO 1.6	AEK	10/94 ⇨ 09/98

FACET 4.9559 — 07,5

IGNITION CABLE SETS

Adatt./Suitable:

[03] **Supplied until depletion**
- Fornibile fino ad esaurimento delle scorte
- Fourni jusqu'à épuisement du stock
- Lieferbar solange vorrat reicht
- Suministrado hasta el stock termina

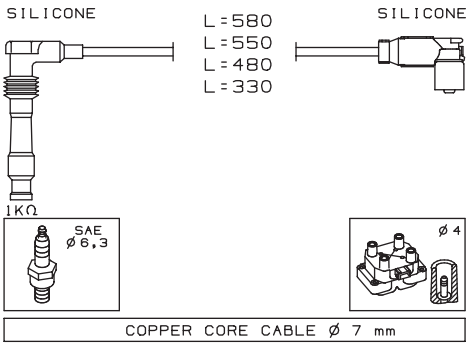

OPEL		
ASTRA F 1.4 i 16V	X14XE	01/96 ⇨ 03/01
ASTRA F 1.6 i 16V	X16XEL	08/94 ⇨ 01/05
COMBO B 1.4 16V	X14XE	08/99 ⇨ 10/01
CORSA B 1.4 i 16V	C14SEL, X14XE	09/94 ⇨ 12/02
CORSA B 1.6 GSI 16V	C16XE	03/93 ⇨ 09/00
CORSA B 1.6 i 16V	C16SEL, X16XE	09/94 ⇨ 09/00
TIGRA A 1.4 16V	X14XE	07/94 ⇨ 12/00
TIGRA A 1.6 16V	C16SEL, X16XE	07/94 ⇨ 08/98
VAUXHALL		
ASTRA III 1.4 i 16V	X14XE	01/96 ⇨ 03/01
ASTRA III 1.6 i 16V	X16XEL	01/94 ⇨ 09/98
COMBO B 1.4 16V	X14XE	08/99 ⇨ 10/01
CORSA B 1.4 i 16V	X14XE	09/94 ⇨ 09/00
CORSA B 1.6 GSI 16V	C16XE	03/93 ⇨ 09/00
CORSA B 1.6 i 16V	X16XE	09/94 ⇨ 09/00
TIGRA A 1.4 16V	X14XE	07/94 ⇨ 12/00
TIGRA A 1.6 16V	X16XE	07/94 ⇨ 12/00

FACET 4.9562 — 07

IGNITION CABLE SETS

Adatt./Suitable:

BOSCH
0 986 357 237
F 005 X04 029
GENERAL MOTORS
90 487 571
HOLDEN
90487571
OPEL
16 12 598

[00] **Eliminated on 22-02-2022. Please verify the availability through our local distributors**
- Eliminato il 22-02-2022. Verificare la disponibilità presso i nostri distributori
- Eliminé le 22-02-2022. Verifier la disponibilité auprès de nos distributeurs sur place
- Am 22-02-2022 gestrichen. Evtl. Verfügbarkeit bitte bei unseren Händlern prüfen
- Eliminado en fecha 22-02-2022. Verificar la disponibilidad a través de nuestros distribuidores locales

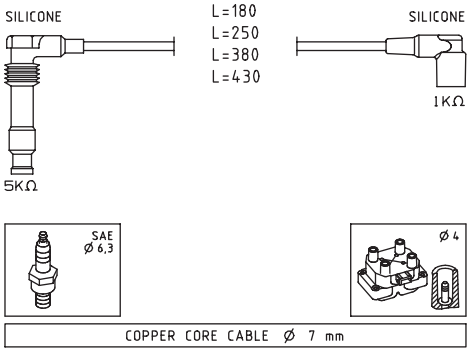

HOLDEN		
ASTRA_TR 1.8i 16v Hatchback	C18SEL	09/96 ⇨ 09/98
ASTRA_TR 1.8i 16v Sedan	C18SEL	09/96 ⇨ 09/98
ASTRA_TR 2.0i 16V Hatchback	X20XEV	09/96 ⇨ 09/98
CALIBRA_YE 2.0i 16V	X20XEV	08/95 ⇨ 10/97
OPEL		
ASTRA F 1.8	Z18XEL	02/03 ⇨ 07/04
ASTRA F 1.8 i 16V	C18SEL, C18XE, C18XEL, X18XE	06/93 ⇨ 03/01
ASTRA F 2.0 i 16V	X20XER, X20XEV	02/95 ⇨ 08/00
ASTRA G 2.0 16V	X20XEV	02/98 ⇨ 01/05
ASTRA G 2.0 16V OPC	X20XER	11/99 ⇨ 09/02
CALIBRA A 2.0 i 16V	X20XEV	02/94 ⇨ 07/97
CALIBRA A 2.0 i 16V 4x4	X20XEV	02/94 ⇨ 07/97
OMEGA B 2.0 16V	X20XEV	03/94 ⇨ 09/99
SINTRA 2.2 i 16V	X22XE	11/96 ⇨ 04/99
VECTRA A 2.0 i 16V	X20XEV	08/92 ⇨ 08/95
VECTRA A 2.0 i 16V 4x4	X20XEV	06/94 ⇨ 11/95
VECTRA B 1.8 i 16V	X18XE	10/95 ⇨ 09/00
VECTRA B 2.0 i 16V	C20SEL, X20XEV	09/95 ⇨ 06/00
VAUXHALL		
ASTRA III 1.8	C18XE	09/94 ⇨ 08/96
ASTRA III 1.8 16V	C18XEL, X18XE	11/94 ⇨ 03/01
ASTRA III 1.8 i 16V	C18XE, C18XEL, X18XE	06/93 ⇨ 02/98
ASTRA III 2.0 i 16V	X20XEV	01/94 ⇨ 09/98
ASTRA IV 2.0	X20XER	10/99 ⇨ 08/00
ASTRA IV 2.0 16V	X20XEV	02/98 ⇨ 05/05
CALIBRA 2.0 i 16V	X20XEV	06/90 ⇨ 07/97
CALIBRA 2.0 i 16V 4x4	X20XEV	02/94 ⇨ 07/97
OMEGA B 2.0 16V	X20XEV	03/94 ⇨ 07/01
SINTRA 2.2 i 16V	X22XE	11/96 ⇨ 04/99
VECTRA B 1.8 i 16V	X18XE	10/95 ⇨ 09/00
VECTRA B 2.0 i 16V	X20XEV	10/95 ⇨ 01/01

FACET 4.9568 — 07

IGNITION CABLE SETS

Adatt./Suitable:

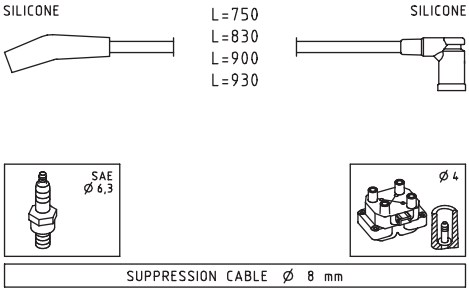

FORD		
ESCORT VI 1.3	J4B	01/95 ⇨ 02/99
FIESTA IV 1.0 i	0EAL	04/96 ⇨ 09/99
FIESTA IV 1.3	J4C	02/96 ⇨ 08/03
FIESTA IV 1.3 i	J4C, J4J, J4L, J4Q, J4R, J4T, JBC, JJA, JJC, JJE, JJJ, JJK, JJM	08/95 ⇨ 01/02
IKON 1.3 EFI	--	01/00 ⇨
KA I 1.3 i	J4D, J4K, J4M, J4N, J4P, J4S, JJB, JJD, JJF, JJG, JJH, JJL	09/96 ⇨ 11/08

FACET 4.9569 — 07

IGNITION CABLE SETS

Adatt./Suitable:

[03] **Supplied until depletion**
- Fornibile fino ad esaurimento delle scorte
- Fourni jusqu'à épuisement du stock
- Lieferbar solange vorrat reicht
- Suministrado hasta el stock termina

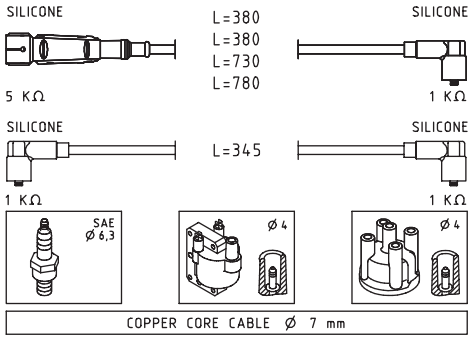

SEAT		
AROSA 1.0	ALL	05/97 ⇨ 06/04
SKODA		
FELICIA 1.6	6A16XHT	06/97 ⇨ 04/02
FELICIA 1.6 GLX	6A16XHT	08/95 ⇨ 03/98
FELICIA 1.6 LX	6A16XHT	08/95 ⇨ 03/98

FACET 4.9575 — 07

IGNITION CABLE SETS

Adatt./Suitable:

VW
036 905 409 K

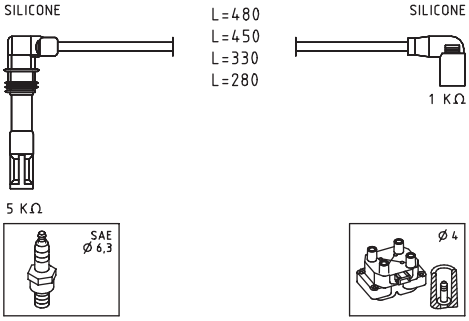

AUDI		
A2 1.4	AUA	02/00 ⇨ 08/05
SEAT		
AROSA 1.4 16V	0P11C-VF, AQQ, AUB	01/00 ⇨ 06/04
CORDOBA I 1.4 16V	2CJXE, AUA	06/99 ⇨ 12/02
IBIZA II 1.4 16V	2CJXE, AUA	05/00 ⇨ 02/02
IBIZA II 1.4 i 16V	AQQ	06/97 ⇨ 02/02
IBIZA III 1.4 16V	AUB	02/02 ⇨ 11/09
INCA 1.4 16V	AUA	04/00 ⇨ 06/03
LEON I 1.4 16V	2CJXE, AHW, AXP	11/99 ⇨ 06/06
LEON I 1.6 16 V	AUS	09/00 ⇨ 06/06
TOLEDO II 1.4 16V	2CJXE, AHW, AXP	01/00 ⇨ 05/02
TOLEDO II 1.6 16V	AUS	06/00 ⇨ 05/06
SKODA		
FABIA I 1.4 16V	AUA, AUB, BBY, BBZ	10/99 ⇨ 03/08
OCTAVIA I 1.4 16V	AXP, BCA	08/00 ⇨ 12/10
VOLKSWAGEN (BR)		
POLO 1.0	ARA	07/02 ⇨ 01/04
VW		
BORA 1.4 16V	AHW, AKQ, APE, AXP	03/00 ⇨ 05/05
BORA 1.6 16V	ATN, AUS	02/00 ⇨ 05/05
CADDY II 1.4	AUA	08/00 ⇨ 01/04
CADDY II 1.4 16V	AUA	08/00 ⇨ 01/04
GOLF IV 1.4 16V	AHW, AKQ, APE, AXP	10/97 ⇨ 06/06
GOLF IV 1.6 16V	ATN, AUS	02/00 ⇨ 06/06
POLO IV 1.0	ARA	02/03 ⇨ 10/03
POLO IV 1.4 16V	AUA	10/01 ⇨ 05/08
LUPO 1.4 16V	AFK, AHW, AKQ, APE, AQQ, AUA, AUB	09/98 ⇨ 07/05
LUPO 1.6 GTI	AVY	09/00 ⇨ 07/05
POLO III 1.4 16V	AFK, AHW, APE, AUA, AUB	10/99 ⇨ 09/01
POLO III 1.6 16V GTI	ARC, AVY	10/99 ⇨ 09/01
POLO III 120 1.6 16V GTI	AJV	09/98 ⇨ 10/99
POLO III 75 1.4 16V	APE, AUA	10/99 ⇨ 09/01

FACET 4.9580 — 07

IGNITION CABLE SETS

Adatt./Suitable:

[03] **Supplied until depletion**
- Fornibile fino ad esaurimento delle scorte
- Fourni jusqu'à épuisement du stock
- Lieferbar solange vorrat reicht
- Suministrado hasta el stock termina

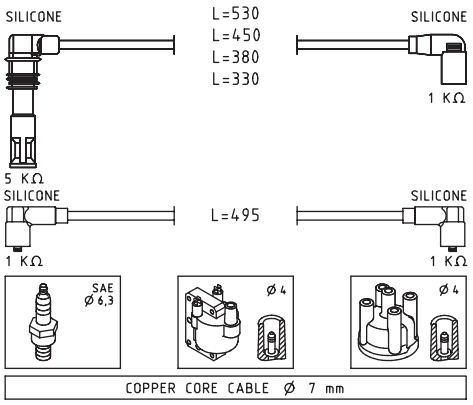

VW		
POLO III 100 1.4 16V	AFH	04/96 ⇨ 10/99

FACET 4.9585 — 07

IGNITION CABLE SETS

Adatt./Suitable:

VW
06A 905 409 L
06A 905 409 P

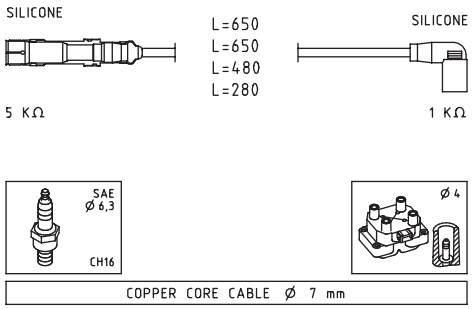

AUDI		
A3 I 1.6	AEH, AVU, BFQ	08/00 ⇨ 05/03
A3 II 1.6	BGU, BSE, BSF	05/03 ⇨ 03/13
A3 II 1.6 E-Power	CCSA, CMXA	01/11 ⇨ 03/13
A4 II 1.6	ALZ	11/00 ⇨ 12/04
A4 I 1.6	0D6-280I-A, AHL, ALZ, ANA	07/00 ⇨ 09/01
A4 III 1.6	ALZ	11/04 ⇨ 06/08
SEAT		
ALTEA 1.6	BGU, BSE, BSF, CCSA, CMXA	03/04 ⇨
ALTEA 1.6 LPG	CHGA	09/09 ⇨
ALTEA XL 1.6	BSE, BSF, CCSA, CMXA	10/06 ⇨
ALTEA XL 1.6 LPG	CHGA	09/09 ⇨
ALTEA XL 1.6 Multifuel	CCSA	10/06 ⇨ 11/10
EXEO 1.6	ALZ	03/09 ⇨ 09/10
IBIZA III 2.0	AZL, BBX	04/02 ⇨ 11/09
CORDOBA II 2.0	AZL, BBX	09/02 ⇨ 11/09
IBIZA IV 2.0	CEKA	10/08 ⇨ 05/15
ALHAMBRA I / II 2.0 i	ATM	04/96 ⇨ 03/10
LEON I 1.6	BFQ	10/05 ⇨ 06/06
LEON II 1.6	BSE, BSF, CCSA, CMXA	07/05 ⇨ 12/12
LEON II 1.6 LPG	CHGA	12/09 ⇨ 12/12
LEON II 1.6 MultiFuel	BSE, CMXA	07/05 ⇨ 08/13
TOLEDO III 1.6	BGU, BSE, BSF	10/04 ⇨ 05/09
SKODA		
FABIA I 2.0	AZL	12/99 ⇨ 03/08
SUPERB I 2.0	AZM	12/01 ⇨ 03/08
OCTAVIA I 1.6	AVU, BFQ	09/00 ⇨ 12/10
OCTAVIA I 2.0	AEG, APK, AQY, AZH	04/99 ⇨ 05/07
OCTAVIA I 2.0 4x4	AZH	08/00 ⇨ 09/04

SKODA		
OCTAVIA II 1.6	BGU, BSE, BSF, CCSA, CMXA	06/04 ⇨ 06/13
OCTAVIA II 1.6 LPG	CHGA	08/09 ⇨ 11/12
OCTAVIA II 1.6 MultiFuel	CCSA, CMXA	01/08 ⇨ 06/13
OCTAVIA II 2.0 [CHN]	BXX., CGZA.	04/07 ⇨
VOLKSWAGEN (BR)		
GOLF A4 2.0i	APK	08/99 ⇨
POLO 2.0	BBX	05/02 ⇨
VW		
PASSAT IV 1.6	AHL, ALZ, ANA, ARM	10/96 ⇨ 05/05
PASSAT IV 2.0	AZM, BFF	11/00 ⇨ 05/05
PASSAT IV 2.0 [CHN]	BFF, BNL	06/03 ⇨
PASSAT IV 2.0 4motion	AZM	11/00 ⇨ 05/05
GOLF VI 1.6	BSE, BSF, CCSA, CMXA	10/08 ⇨
GOLF VI 1.6 BiFuel	CHGA	03/09 ⇨
GOLF VI 1.6 MultiFuel	CCSA, CHGA, CMXA	10/08 ⇨
BORA 1.6	AVU, BFQ	08/00 ⇨ 05/05
BORA 2.0	APK, AQY, AZH	10/98 ⇨ 12/13
BORA 2.0 4motion	AZH	04/00 ⇨ 05/05
GOLF V 1.6	BGU, BSE, BSF, CCSA, CHGA	01/04 ⇨
GOLF V 1.6 MultiFuel	CCSA	10/07 ⇨ 12/13
GOLF V 2.0	BHY	01/05 ⇨ 11/08
CADDY III 1.6	BGU, BRY, BSE, BSF	04/04 ⇨ 05/15
CADDY III 1.6 BiFuel	CHGA	05/11 ⇨ 05/15
JETTA V 1.6	BSE, BSF, CCSA	09/04 ⇨ 10/10
JETTA V 1.6 [CHN]	BJG	01/05 ⇨
JETTA V 1.6 MultiFuel	CCSA	01/08 ⇨ 10/10
PASSAT V 1.6	BSE, BSF	05/05 ⇨ 11/10
GOLF IV 1.6	AVU, BFQ	08/00 ⇨ 06/06
GOLF IV 2.0	APK, AQY	07/98 ⇨ 06/06
GOLF IV 2.0 4motion	AZH	10/00 ⇨ 06/06
JETTA VI 2.0	CBPA	06/10 ⇨ 12/17
POLO IV 2.0	BBX	09/02 ⇨
POLO III 1.6	APF, AUR	05/97 ⇨ 09/01
POLO III 100 1.6	APF, AUR	12/95 ⇨ 09/01
MULTIVAN 2.0	AXA	11/03 ⇨ 08/15
NEW BEETLE 1.6	AWH, AYD, BFS	06/00 ⇨ 09/10
NEW BEETLE 2.0	AEG, APK, AQY, BER, BHP, CBPA	01/98 ⇨ 10/10
SHARAN I 2.0	ATM	09/95 ⇨ 03/10
SHARAN I 2.0 LPG	ATM	04/06 ⇨ 03/10
TOURAN I 1.6	BGU, BSE, BSF	07/03 ⇨ 05/10
TOURAN I 2.0 FSI	BJZ	10/04 ⇨ 05/10
TOURAN I 2.0 TDI [CHN]	CGZA	04/09 ⇨
TRANSPORTER V 2.0	AXA	11/03 ⇨ 08/15

FACET 4.9595 — 07

IGNITION CABLE SETS

Adatt./Suitable:

00 Eliminated on 13-09-2021. Please verify the availability through our local distributors

- Eliminato il 13-09-2021. Verificare la disponibilità presso i nostri distributori
- Eliminé le 13-09-2021. Verifier la disponibilité auprès de nos distributeurs sur place
- Am 13-09-2021 gestrichen. Evtl. Verfügbarkeit bitte bei unseren Händlern prüfen
- Eliminado en fecha 13-09-2021. Verificar la disponibilidad a través de nuestros distribuidores locales

03 Supplied until depletion

- Fornibile fino ad esaurimento delle scorte
- Fourni jusqu'à épuisement du stock
- Lieferbar solange vorrat reicht
- Suministrado hasta el stock termina

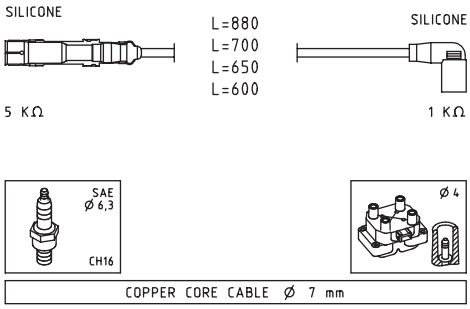

SEAT		
AROSA 1.0	ALD, ANV	05/97 ⇨ 06/04
AROSA 1.4	4A20NFT	05/97 ⇨ 06/04
VW		
LUPO 1.0	ALD, ANV	09/98 ⇨ 07/05

FACET 4.9601 — 07

IGNITION CABLE SETS

Adatt./Suitable:

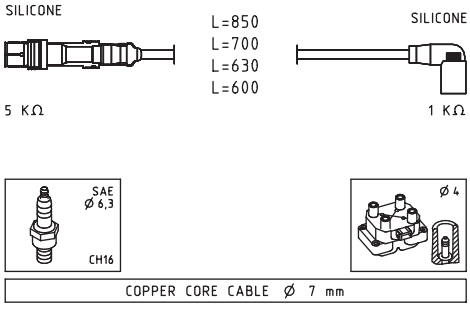

SEAT		
AROSA 1.0	AUC	05/97 ⇨ 06/04
AROSA 1.4	AUD	05/97 ⇨ 06/04
IBIZA II 1.0 i	AUC	09/96 ⇨ 02/02
IBIZA II 1.4 i	AUD	09/93 ⇨ 02/02
INCA 1.4 i	AUD	11/95 ⇨ 06/03
VW		
CADDY II 1.4	AUD	11/95 ⇨ 06/03
CADDY II 60 1.4	AUD	11/95 ⇨ 01/04
LUPO 1.0	AUC	09/98 ⇨ 07/05
LUPO 1.4	AUD	10/00 ⇨ 07/05
POLO III 1.0	ALD, AUC	10/99 ⇨ 09/01
POLO III 1.4	AKK, AKP, ANW, AUD	05/97 ⇨ 09/01
POLO III 60 1.4	AKK, ANW, AUD	12/95 ⇨ 09/01

FACET 4.9607 — 07,5

IGNITION CABLE SETS

Adatt./Suitable:

00 Eliminated on 31-08-2021. Please verify the availability through our local distributors

- Eliminato il 31-08-2021. Verificare la disponibilità presso i nostri distributori
- Eliminé le 31-08-2021. Verifier la disponibilité auprès de nos distributeurs sur place
- Am 31-08-2021 gestrichen. Evtl. Verfügbarkeit bitte bei unseren Händlern prüfen
- Eliminado en fecha 31-08-2021. Verificar la disponibilidad a través de nuestros distribuidores locales

03 Supplied until depletion

- Fornibile fino ad esaurimento delle scorte
- Fourni jusqu'à épuisement du stock
- Lieferbar solange vorrat reicht
- Suministrado hasta el stock termina

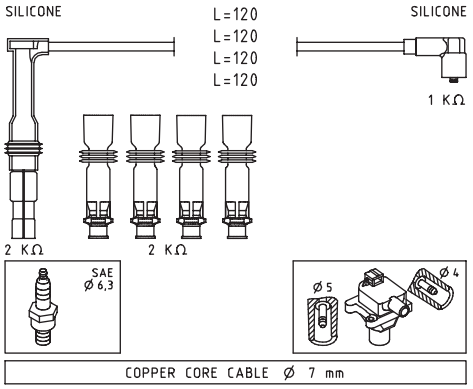

ALFA ROMEO		
147 1.6 16V T.SPARK	AR32104	01/01 ⇨ 03/10
147 1.6 16V T.SPARK ECO	AR37203	01/01 ⇨ 03/10
147 2.0 16V T.SPARK	AR32310	01/01 ⇨ 03/10
156 1.6 16V T.SPARK	AR32103, AR32104	09/97 ⇨ 09/05
156 1.6 16V T.SPARK.	AR32103, AR32104	05/00 ⇨ 05/06
156 2.0 16V T.SPARK	AR32310	05/00 ⇨ 06/02
166 2.0 T.Spark	AR36301	10/00 ⇨ 06/07
GT 1.8 TS	AR32205	11/03 ⇨ 09/10
GTV 2.0 T.SPARK 16V	AR32310	06/95 ⇨ 10/05
SPIDER II 2.0 T.SPARK 16V	AR32310	06/95 ⇨ 04/05

FACET 4.9608 — 07,5

IGNITION CABLE SETS

Adatt./Suitable:

[00] **Eliminated on 14-06-2021. Please verify the availability through our local distributors**

- Eliminato il 14-06-2021. Verificare la disponibilità presso i nostri distributori
- Eliminé le 14-06-2021. Verifier la disponibilité auprès de nos distributeurs sur place
- Am 14-06-2021 gestrichen. Evtl. Verfügbarkeit bitte bei unseren Händlern prüfen
- Eliminado en fecha 14-06-2021. Verificar la disponibilidad a través de nuestros distribuidores locales

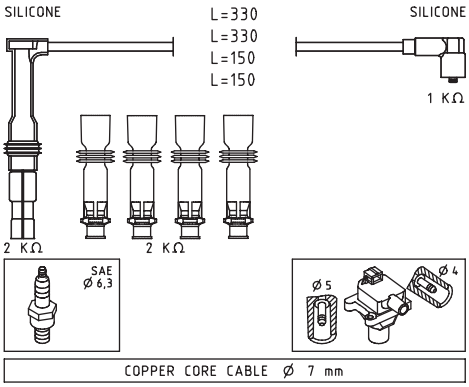

ALFA ROMEO		
145 1.4 i.e. 16V T.S.	AR33503	12/96 ⇨ 01/01
145 1.6 16V T.S.	AR32102	09/97 ⇨ 12/00
145 1.8 i.e. 16V	AR32201	03/98 ⇨ 01/01
145 1.8 i.e. 16V T.S.	AR67106	12/96 ⇨ 12/98
145 1.8 i.e. 16V T.S. [BRA]	AR67199	10/96 ⇨ 02/99
145 2.0 16V	AR32301	03/98 ⇨ 01/01
145 2.0 16V T.S.	AR67204	10/95 ⇨ 01/01
145 2.0 16V T.SPARK [BRA]	AR67299	10/96 ⇨ 02/99
146 1.4 i.e. 16V T.S.	AR33503	11/96 ⇨ 01/01
146 1.6 16V T.S.	AR32102	09/97 ⇨ 12/00
146 1.6 i.e. 16V T.S.	AR67601	11/96 ⇨ 10/01
146 1.8 i.e. 16V T.S.	AR32201, AR67106	11/96 ⇨ 01/01
146 2.0 16V	AR32301	03/97 ⇨ 10/01
146 2.0 16V T.S.	AR67204	10/95 ⇨ 01/01
155 1.6 16V T.S.	AR67601	05/96 ⇨ 12/97
155 1.7 T.S. 16V	AR67106	05/96 ⇨ 12/97
155 2.0 T.S. 16V	AR67204, AR67299	03/95 ⇨ 12/97
156 1.6 16V T.SPARK	AR32102, AR67601	09/97 ⇨ 09/05
156 1.6 16V T.SPARK.	AR32102, AR67601	05/00 ⇨ 05/06
156 1.8 16V T.SPARK	AR32201	09/97 ⇨ 10/00
156 2.0 16V T.SPARK	AR32301	09/97 ⇨ 06/02
166 2.0 T.Spark	AR34103	09/98 ⇨ 10/00
GTV 1.8 16V	AR32201	05/98 ⇨ 10/05
GTV 2.0 T.SPARK 16V	AR16201, AR32301	06/95 ⇨ 10/05
SPIDER II 1.8 16V	AR32201	05/98 ⇨ 04/05
SPIDER II 2.0 T.SPARK 16V	AR16201, AR32301	06/95 ⇨ 04/05

FACET 4.9609 — 07

IGNITION CABLE SETS

Adatt./Suitable:

[03] **Supplied until depletion**

- Fornibile fino ad esaurimento delle scorte
- Fourni jusqu'à épuisement du stock
- Lieferbar solange vorrat reicht
- Suministrado hasta el stock termina

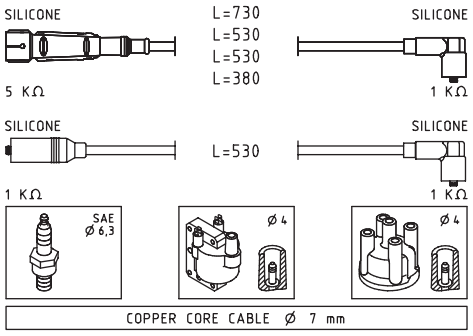

SKODA		
OCTAVIA I 1.6	6A16XHT	09/96 ⇨ 09/04
VW		
GOLF III 1.6	AEE	09/92 ⇨ 08/97
VENTO 1.6	AEE	09/92 ⇨ 09/98

FACET 4.9614 — 07

IGNITION CABLE SETS

Adatt./Suitable:

[03] **Supplied until depletion**

- Fornibile fino ad esaurimento delle scorte
- Fourni jusqu'à épuisement du stock
- Lieferbar solange vorrat reicht
- Suministrado hasta el stock termina

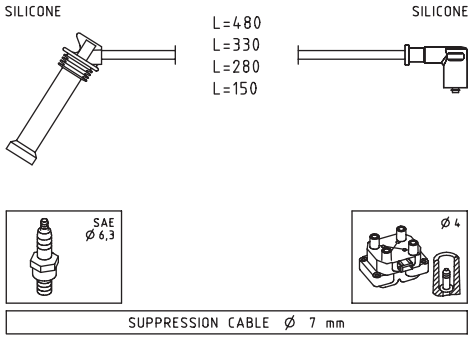

FACET 4.9619 — 07

IGNITION CABLE SETS

Adatt./Suitable:

[03] **Supplied until depletion**

- Fornibile fino ad esaurimento delle scorte
- Fourni jusqu'à épuisement du stock
- Lieferbar solange vorrat reicht
- Suministrado hasta el stock termina

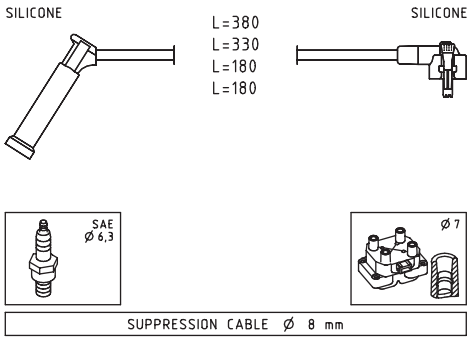

FORD		
FIESTA IV 1.25 i 16V	DHA, DHB, DHC, DHD, DHE, DHF, DHG	08/95 ⇨ 01/02
FIESTA IV 1.4 i 16V	FHA, FHE	04/96 ⇨ 01/02
PUMA 1.4 16V	FHD, FHF	11/97 ⇨ 10/00
PUMA 1.7 16V	MHA, MHB	03/97 ⇨ 06/02

FACET 4.9624 — 07

IGNITION CABLE SETS

Adatt./Suitable:

[03] **Supplied until depletion**

- Fornibile fino ad esaurimento delle scorte
- Fourni jusqu'à épuisement du stock
- Lieferbar solange vorrat reicht
- Suministrado hasta el stock termina

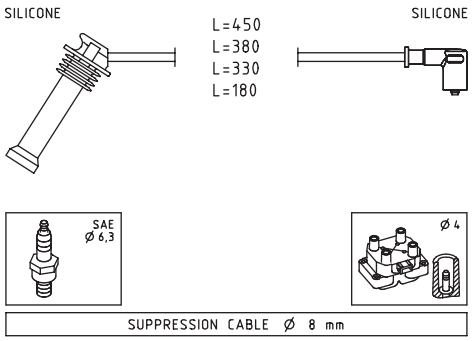

FORD		
COUGAR 2.0 16V	EDBA, EDBB, EDBC, EDBD	08/98 ⇨ 12/01
FOCUS I 1.6 16V	--	02/01 ⇨ 11/04
FOCUS I 1.8 16V	EYDB, EYDC, EYDD, EYDE, EYDF, EYDG, EYDI, EYDJ, EYDL	10/98 ⇨ 11/04
FOCUS I 1.8 BiFuel	EYDL	02/03 ⇨ 01/05
FOCUS I 2.0 16V	EDDB, EDDC, EDDD, EDDF	10/98 ⇨ 11/04
FOCUS I RS	HMDA	10/02 ⇨ 11/04
FOCUS I ST170	ALDA	03/02 ⇨ 11/04
MAVERICK 2.0 16V	YF	02/01 ⇨
MONDEO I 1.6 i	L1J	08/96 ⇨ 09/00
MONDEO I 1.6 i 16V	L1L, L1N, L1Q	05/98 ⇨ 09/00
MONDEO I 1.8 i	RKB, RKF, RKH, RKJ, RKK	08/96 ⇨ 09/00
MONDEO I 2.0 i	NGA, NGB, NGC, NGD	08/96 ⇨ 09/00
TOURNEO CONNECT I 1.8 16V	EYPA, EYPC, EYPD	06/02 ⇨ 12/13
TRANSIT CONNECT I 1.8 16V	EYPA, EYPC, EYPD	06/02 ⇨ 12/13
TRANSIT CONNECT I 1.8 16V LPG	EYPC	06/02 ⇨ 12/13

FACET 4.9625 — 07

IGNITION CABLE SETS

Adatt./Suitable:

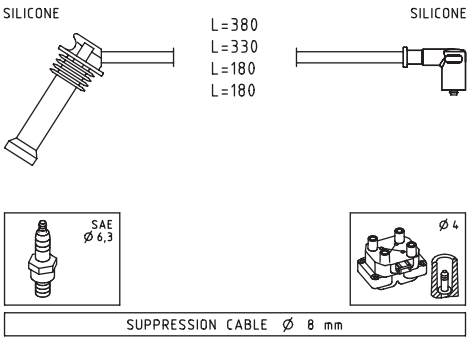

FORD		
FIESTA V 1.25 16V	FUJA, FUJB, M7JA, M7JB	05/02 ⇨ 06/08
FIESTA V 1.4 16V	FXJA, FXJB	11/01 ⇨ 06/08
FIESTA V 1.6 16V	FYJA, FYJB	11/01 ⇨ 06/08
FIESTA IV 1.25 i 16V	DHA, DHB, DHC, DHD, DHE, DHF, DHG	08/95 ⇨ 01/02
FIESTA IV 1.4 i 16V	FHA, FHE	04/96 ⇨ 01/02
FIESTA IV 1.6 16V Sport	L1T, L1V	02/00 ⇨ 01/02
FOCUS I 1.4 16V	FXDA, FXDB, FXDC, FXDD	10/98 ⇨ 11/04
FOCUS I 1.6 16V	FYDA, FYDB, FYDC, FYDD, FYDH	10/98 ⇨ 11/04
FOCUS II 1.4	ASDA, ASDB	07/04 ⇨ 09/12
FOCUS II 1.6	HWDA, HWDB, SHDA, SHDB, SHDC	07/04 ⇨ 09/12
FOCUS II 1.6 Ti	HXDA, HXDB	07/04 ⇨ 09/12
FOCUS C-MAX 1.6	HWDA, HWDB	10/03 ⇨ 03/07
FOCUS C-MAX 1.6 Ti	HXDA, SIDA	08/04 ⇨ 03/07
FUSION 1.25	--, FUJA, FUJB	10/02 ⇨
FUSION 1.4	--, FXJA, FXJB, FXJC	08/02 ⇨
FUSION 1.6	FYJA, FYJB, FYJC	08/02 ⇨ 11/09
MONDEO III 1.6 Ti	KGBA, PNBA, RHBA	03/07 ⇨ 01/15
PUMA 1.4 16V	FHD, FHF	11/97 ⇨ 10/00
PUMA 1.6 16V	L1W	08/00 ⇨ 06/02
PUMA 1.7 16V	MHA, MHB	03/97 ⇨ 06/02

FACET 4.9630 — 07

IGNITION CABLE SETS

Adatt./Suitable:

[03] **Supplied until depletion**
- Fornibile fino ad esaurimento delle scorte
- Fourni jusqu'à épuisement du stock
- Lieferbar solange vorrat reicht
- Suministrado hasta el stock termina

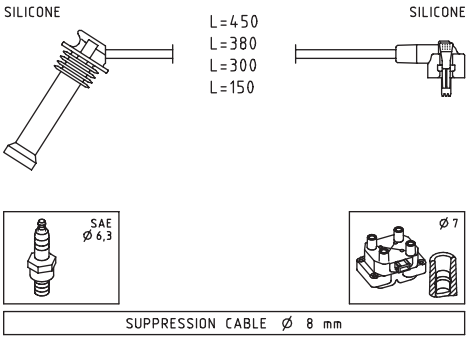

FORD		
ESCORT IV 1.6 16V	L1E	10/98 ⇨ 07/00
ESCORT V 1.6 16V XR3i	L1E	12/92 ⇨ 01/95
ESCORT V 1.6 i 16V	L1E, L1H, L1K	09/92 ⇨ 01/95
ESCORT V 1.8 16V	RDA	02/92 ⇨ 01/95
ESCORT V 1.8 16V XR3i	99BFR1740, RDA	02/92 ⇨ 01/95
ESCORT V 1.8 i 16V	99BFR1740	09/92 ⇨ 01/95
ESCORT V 1.8 XR3i 16V 4x4	99BFR1740, RDA	08/93 ⇨ 01/95
ESCORT VI 1.6 16V	L1E	01/95 ⇨ 07/00
ESCORT VI 1.6 16V 4x4	L1E	01/95 ⇨ 10/98
ESCORT VI 1.6 16V XR3i	L1E, L1H	02/95 ⇨ 09/99
ESCORT VI 1.6 i 16V	L1E, L1H, L1K	01/95 ⇨ 02/99
ESCORT VI 1.8 16V	RDA, RKC	01/95 ⇨ 02/99
ESCORT VI 1.8 16V XR3i	RDA, RKC	02/95 ⇨ 08/98
FIESTA III 1.6 i 16V	L1G	01/94 ⇨ 12/95
FIESTA III 1.8 16V	RDB	02/92 ⇨ 12/95
FIESTA III 1.8 XR2i 16V	RQC	02/92 ⇨ 12/95
MONDEO I 1.6 i	L1J	08/96 ⇨ 09/00
MONDEO I 1.6 i 16V	L1F, L1J, L1L, L1N, L1Q	02/93 ⇨ 09/00
MONDEO I 1.8 4x4	RKA	02/93 ⇨ 08/96
MONDEO I 1.8 i	RKB, RKF, RKH, RKJ, RKK	08/96 ⇨ 09/00
MONDEO I 1.8 i 16V	RKA, RKB	02/93 ⇨ 08/96
MONDEO I 1.8 i 16V 4x4	RKA	02/93 ⇨ 08/96
MONDEO I 2.0 i	NGA, NGB, NGC, NGD	08/96 ⇨ 09/00
MONDEO I 2.0 i 16V	NGA	01/93 ⇨ 08/96
MONDEO I 2.0 i 16V 4x4	NGA	02/93 ⇨ 08/96
ORION II 1.6 i 16V	L1E, L1K	07/92 ⇨ 12/93
ORION II 1.8 i 16V	99BFR1740, RDA	01/92 ⇨ 12/93

FACET 4.9634 — 07

IGNITION CABLE SETS

Adatt./Suitable:

BOSCH
0 986 356 988
CHEVROLET
96256433
96518123
DAEWOO
96256433
96518123
GENERAL MOTORS
96 518 123
HITACHI
134227

[03] **Supplied until depletion**
- Fornibile fino ad esaurimento delle scorte
- Fourni jusqu'à épuisement du stock
- Lieferbar solange vorrat reicht
- Suministrado hasta el stock termina

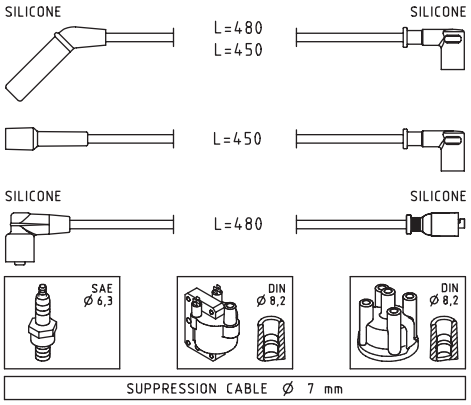

CHEVROLET		
MATIZ 0.8	LBF(49CUL3), LQ2(49CUL3)	03/05 ⇨ 12/13
MATIZ 0.8 LPG	F8CV	03/05 ⇨ 12/07
SPARK I 0.8	F8CV	09/00 ⇨ 12/06
SPARK II 0.8	F8CV	05/05 ⇨ 02/10
DAEWOO		
MATIZ 0.8	F8CV	08/98 ⇨

FACET 4.9639 — 07

IGNITION CABLE SETS

Adatt./Suitable:

[03] **Supplied until depletion**
- Fornibile fino ad esaurimento delle scorte
- Fourni jusqu'à épuisement du stock
- Lieferbar solange vorrat reicht
- Suministrado hasta el stock termina

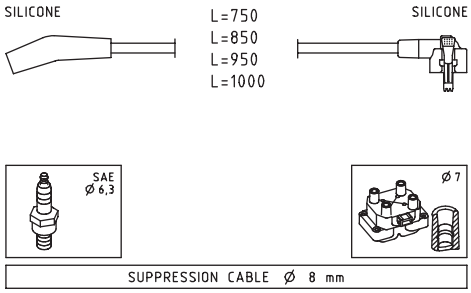

FORD		
ESCORT VI 1.3	J4B	01/95 ⇨ 02/99
FIESTA IV 1.0 i	0EAL	04/96 ⇨ 09/99
FIESTA IV 1.3	J4C	02/96 ⇨ 08/03
FIESTA IV 1.3 i	J4C, J4J, J4L, J4Q, J4R, J4T, JBC, JJA, JJC, JJE, JJJ, JJK, JJM	08/95 ⇨ 01/02
KA I 1.3 i	J4D, J4K, J4M, J4N, J4P, J4S, JJB, JJD, JJF, JJG, JJH, JJL	09/96 ⇨ 11/08

FACET 4.9640 — 07

IGNITION CABLE SETS

Adatt./Suitable:

[03] **Supplied until depletion**
- Fornibile fino ad esaurimento delle scorte
- Fourni jusqu'à épuisement du stock
- Lieferbar solange vorrat reicht
- Suministrado hasta el stock termina

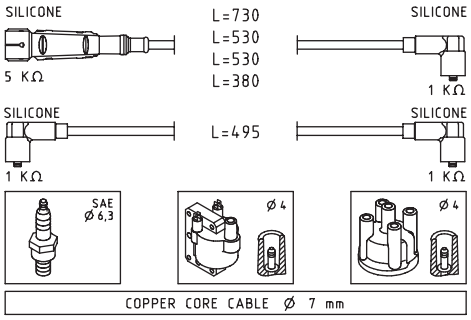

SEAT		
CORDOBA I 1.0 i	AER	09/96 ⇨ 10/02
CORDOBA I 1.4	ANX	12/97 ⇨ 04/99
CORDOBA I 1.4 i	AEX, AKV, APQ	06/94 ⇨ 12/02
CORDOBA I 1.6 i	AEE, ALM	02/93 ⇨ 12/02
IBIZA II 1.0 i	AER	09/96 ⇨ 02/02
IBIZA II 1.4	ANX	12/97 ⇨ 04/99
IBIZA II 1.4 i	AEX, AKV, APQ	09/93 ⇨ 02/02
IBIZA II 1.6 i	AEE, ALM	03/93 ⇨ 02/02
VW		
POLO III 1.4	AEX, AKV, ANX, APQ	05/97 ⇨ 09/01
POLO III 1.6	AEE, ALM	05/97 ⇨ 09/01
POLO III 54 1.4	ANX	01/98 ⇨ 08/99
POLO III 55 1.4	AEX	08/95 ⇨ 10/99
POLO III 60 1.4	AEX, AKV, APQ	07/95 ⇨ 09/01
POLO III 75 1.6	AEE, ALM	10/94 ⇨ 09/01
VENTO 1.4	AEX	11/91 ⇨ 09/98

FACET 4.9641 — 07

IGNITION CABLE SETS

Adatt./Suitable:

[03] **Supplied until depletion**
- Fornibile fino ad esaurimento delle scorte
- Fourni jusqu'à épuisement du stock
- Lieferbar solange vorrat reicht
- Suministrado hasta el stock termina

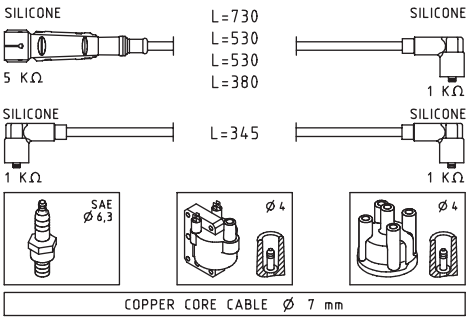

SEAT		
AROSA 1.0	AER	05/97 ⇨ 06/04
AROSA 1.4	AEX, AKV, APQ	05/97 ⇨ 06/04
VW		
CADDY II 1.6	AEE	06/96 ⇨ 12/00
LUPO 1.0	AER, ALL	09/98 ⇨ 07/05
POLO III 1.4	AEX	05/97 ⇨ 09/01
POLO III 50 1.0	AER, ALL	09/96 ⇨ 10/99
POLO III 55 1.4	AEX	08/95 ⇨ 10/99
POLO III 60 1.4	AEX, AKV	07/95 ⇨ 09/01
POLO III 75 1.6	AEE, AHS	10/94 ⇨ 09/01
POLO IV 1.0	AER	08/96 ⇨ 12/01

FACET 4.9643 — 07

IGNITION CABLE SETS

Adatt./Suitable:

BOSCH
0 356 912 975
HITACHI
134952
SMART
Q 0002576V002000000

[03] **Supplied until depletion**
- Fornibile fino ad esaurimento delle scorte
- Fourni jusqu'à épuisement du stock
- Lieferbar solange vorrat reicht
- Suministrado hasta el stock termina

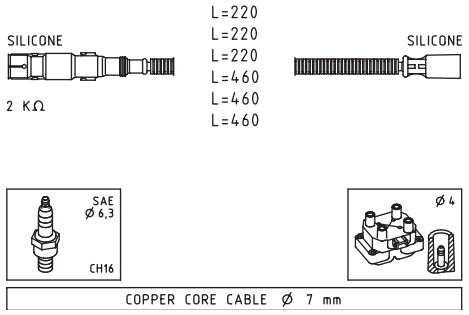

SMART		
CABRIO 0.6	M160E6ALB03, M160E-6ALB05, M160.910, M160.920	03/00 ⇨ 01/04
CABRIO 0.7	M160.910	01/03 ⇨ 01/04
CITY-COUPE 0.6	M160E6ALB03, M160E-6ALB04, M160E6ALB05, M160.920	01/01 ⇨ 01/04
CITY-COUPE 0.7	M160.910	01/03 ⇨ 01/04
CROSSBLADE 0.6	M160.920	06/02 ⇨ 12/03
FORTWO I 0.7	M160.910	01/04 ⇨ 01/07
ROADSTER 0.7	M160.921, M160.922	04/03 ⇨ 11/05
ROADSTER 0.7 Brabus	M160.923	12/03 ⇨ 11/05

FACET 4.9649 — 07,5

IGNITION CABLE SETS

Adatt./Suitable:

[03] **Supplied until depletion**
- Fornibile fino ad esaurimento delle scorte
- Fourni jusqu'à épuisement du stock
- Lieferbar solange vorrat reicht
- Suministrado hasta el stock termina

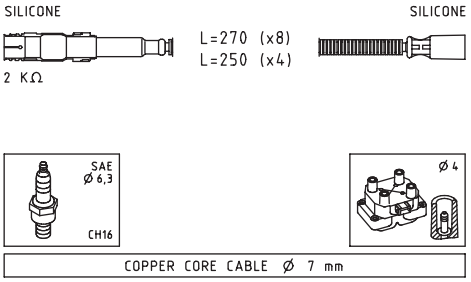

MERCEDES-BENZ		
CLASSE C I C 240	M112.910	06/97 ⇨ 05/00
CLASSE C I C 240 T	M112.910, M112.915	09/00 ⇨ 03/01
CLASSE C I C 280	M112.920	06/97 ⇨ 05/00
CLASSE C I C 280 T	M112.920	06/97 ⇨ 03/01
CLASSE C II C 240	M112.912	05/00 ⇨ 08/07
CLASSE C II C 240 4-matic	M112.916	07/02 ⇨ 08/07
CLASSE C II C 32 AMG Kompressor	M112.961	02/01 ⇨ 08/07
CLASSE C II C 320	M112.946	05/00 ⇨ 05/08
CLASSE C II C 320 4-matic	M112.953	07/02 ⇨ 08/07
CLASSE CLK I 320	M112.940	06/97 ⇨ 06/02
CLASSE CLK II 240	M112.912	06/02 ⇨ 05/09
CLASSE CLK II 320	M112.955	06/02 ⇨ 05/09
CLASSE CLK II CLK 240	M112.912	02/03 ⇨ 03/10
CLASSE CLK II CLK 320	M112.955	02/03 ⇨ 03/10
CLASSE E II E 240	M112.911, M112.914	08/00 ⇨ 03/02
CLASSE E II E 240 T	M112.911, M112.914	08/00 ⇨ 03/03
CLASSE E II E 280	M112.921	12/96 ⇨ 03/02
CLASSE E II E 280 4-matic	M112.921	12/96 ⇨ 03/02
CLASSE E II E 280 T	M112.921	12/96 ⇨ 03/03
CLASSE E II E 280 T 4-matic	M112.921	12/96 ⇨ 03/03
CLASSE E II E 320	M112.941	06/97 ⇨ 03/02
CLASSE E II E 320 4-matic	M112.941	06/97 ⇨ 03/02
CLASSE E II E 320 T	M112.941	12/96 ⇨ 03/03
CLASSE E II E 320 T 4-matic	M112.941	12/96 ⇨ 03/03
CLASSE E III E 240	M112.913	03/02 ⇨ 12/08
CLASSE E III E 240 4-matic	M112.917	03/03 ⇨ 12/08
CLASSE E III E 240 T	M112.913	03/03 ⇨ 07/09
CLASSE E III E 240 T 4-matic	M112.917	07/03 ⇨ 07/09
CLASSE E III E 320	M112.949	03/02 ⇨ 12/08
CLASSE E III E 320 4-matic	M112.954	03/03 ⇨ 12/08
CLASSE E III E 320 T	M112.949	03/03 ⇨ 07/09
CLASSE E III E 320 T 4-matic	M112.954	07/03 ⇨ 07/09
CLASSE G II G 320	M112.945	06/97 ⇨ 11/97
CLASSE M I ML 320	M112.942	02/98 ⇨ 08/02
CLASSE M I ML 350	M112.970	08/02 ⇨ 06/05
CLASSE S IV S 280	M112.922	10/98 ⇨ 08/05
CLASSE S IV S 320	M112.944	10/98 ⇨ 08/05
CLASSE S IV S 350	M112.972	09/02 ⇨ 08/05
CLASSE S IV S 350 4-matic	M112.975	06/03 ⇨ 08/05
CLASSE SL IV 280	M112.923	05/98 ⇨ 10/01
CLASSE SL IV 320	M112.943	05/98 ⇨ 10/01
CLASSE SL V 350	M112.973	03/03 ⇨ 01/12
CLASSE SLK I 32 AMG Kompressor	M112.960	03/01 ⇨ 04/04
CLASSE SLK I 320	M112.947	03/00 ⇨ 04/04
VIANO 3.2	M112.951	09/03 ⇨
VIANO 3.7	M112.976	06/04 ⇨
VITO II 119	M112.951	09/03 ⇨
VITO II 122	M112.951	09/03 ⇨
VITO II 123	M112.976	06/04 ⇨ 07/08

FACET 4.9654 — 07

IGNITION CABLE SETS

Adatt./Suitable:

[00] **Eliminated on 23-03-2021. Please verify the availability through our local distributors**
- Eliminato il 23-03-2021. Verificare la disponibilità presso i nostri distributori
- Eliminé le 23-03-2021. Verifier la disponibilité auprès de nos distributeurs sur place
- Am 23-03-2021 gestrichen. Evtl. Verfügbarkeit bitte bei unseren Händlern prüfen
- Eliminado en fecha 23-03-2021. Verificar la disponibilidad a través de nuestros distribuidores locales

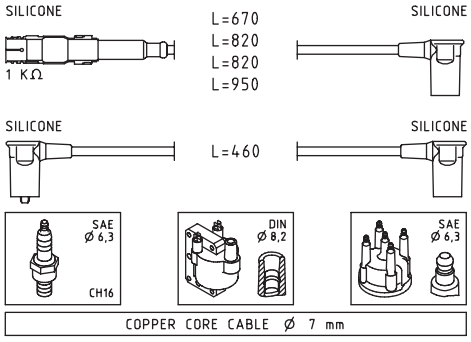

MERCEDES-BENZ		
124 200 CE	M102.963	09/89 ⇨ 06/93
124 230 CE	M102.982	03/87 ⇨ 12/92
124 230 CE Cat	M102.982	06/89 ⇨ 12/92
190 2.0	M102.924	08/83 ⇨ 05/90
CLASSE G I 200 GE	M102.964	02/80 ⇨ 08/92
CLASSE G I 230 GE	M102.981, M102.987	04/82 ⇨ 08/92
CLASSE G II 230 GE	M102.981	04/92 ⇨
KOMBI II 200 T	M102.922	09/85 ⇨ 05/90
KOMBI II 200 TE	M102.963	09/88 ⇨ 08/92
KOMBI II 230 E Chassis	M102.982	09/86 ⇨ 06/93
KOMBI II 230 TE	M102.982	09/85 ⇨ 08/92
KOMBI II 230 TE Cat	M102.982	06/89 ⇨ 08/92
T1 210 2.3	M102.942, M102.945	04/77 ⇨ 02/96
T1 310 2.3	M102.942, M102.945	08/82 ⇨ 02/96
T1 410 2.3	M102.942, M102.945	08/82 ⇨ 06/95
T2/LN1 510	M102.946	04/86 ⇨ 12/94
TRE VOLUMI II 200	M102.922	12/85 ⇨ 10/92
TRE VOLUMI II 200 E	M102.963	09/88 ⇨ 08/93
TRE VOLUMI II 230 E	M102.982	12/84 ⇨ 06/93
TRE VOLUMI II 230 E Cat	M102.982	06/89 ⇨ 06/93
PUCH		
G-MODELL 230 GE	M102.981, M102.987	03/79 ⇨ 12/91

FACET 4.9657 — 07,5

IGNITION CABLE SETS

Adatt./Suitable:

[00] **Eliminated on 30-09-2019. Please verify the availability through our local distributors**

- Eliminato il 30-09-2019. Verificare la disponibilità presso i nostri distributori
- Eliminé le 30-09-2019. Verifier la disponibilité auprès de nos distributeurs sur place
- Am 30-09-2019 gestrichen. Evtl. Verfügbarkeit bitte bei unseren Händlern prüfen
- Eliminado en fecha 30-09-2019. Verificar la disponibilidad a través de nuestros distribuidores locales

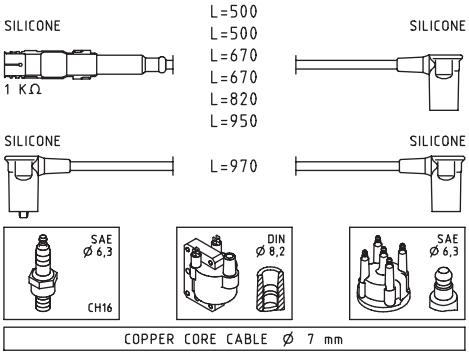

MERCEDES-BENZ		
CLASSE E I E 300 4-matic	M103.985	06/93 ⇨ 06/95
CLASSE E I E 300 T 4-matic	M103.985	06/93 ⇨ 06/96
124 300 CE	M103.983	03/87 ⇨ 05/93
CLASSE G II 300 GE	M103.987	09/89 ⇨ 09/97
CLASSE SL III 300 SL	M103.982	09/85 ⇨ 08/89
CLASSE SL IV 300 SL	M103.984	03/89 ⇨ 08/93
KOMBI II 300 TE	M103.983	01/86 ⇨ 08/92
KOMBI II 300 TE 4-matic	M103.985	09/86 ⇨ 06/93
TRE VOLUMI II 260 E	M103.940	09/85 ⇨ 08/92
TRE VOLUMI II 260 E 4-matic	M103.943	09/86 ⇨ 08/92
TRE VOLUMI II 300 E	M103.983	08/85 ⇨ 08/92
TRE VOLUMI II 300 E 4-matic	M103.983, M103.985	09/86 ⇨ 06/93
PUCH		
G-MODELL 300 GE	M103.987	06/89 ⇨ 08/93

FACET 4.9658 — 08

IGNITION CABLE SETS

Adatt./Suitable:

BOSCH
0 986 357 239

NISSAN
22440-86J00
22440-86J10

[00] **Eliminated on 07-04-2021. Please verify the availability through our local distributors**

- Eliminato il 07-04-2021. Verificare la disponibilità presso i nostri distributori
- Eliminé le 07-04-2021. Verifier la disponibilité auprès de nos distributeurs sur place
- Am 07-04-2021 gestrichen. Evtl. Verfügbarkeit bitte bei unseren Händlern prüfen
- Eliminado en fecha 07-04-2021. Verificar la disponibilidad a través de nuestros distribuidores locales

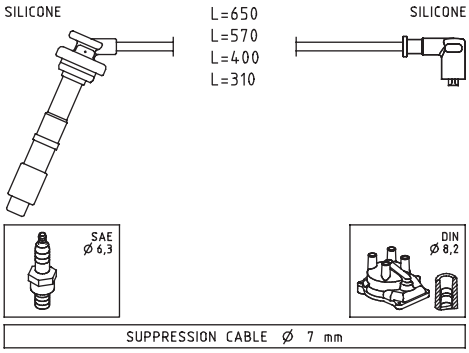

NISSAN		
PRIMERA II 1.6 16V	GA16DE	09/96 ⇨ 07/02
PRIMERA I 1.6	GA16DE	06/93 ⇨ 01/96

FACET 4.9660 — 07

IGNITION CABLE SETS

Adatt./Suitable:

[03] **Supplied until depletion**

- Fornibile fino ad esaurimento delle scorte
- Fourni jusqu'à épuisement du stock
- Lieferbar solange vorrat reicht
- Suministrado hasta el stock termina

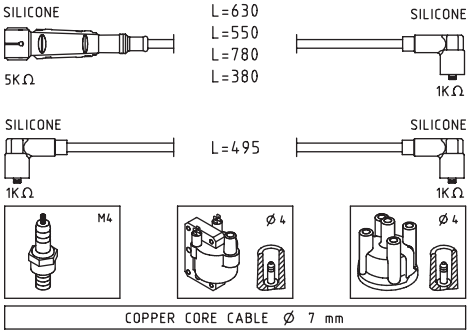

SEAT		
INCA 1.4 i	AEX, AKV, APQ	11/95 ⇨ 06/03
INCA 1.6 i	AEE	06/97 ⇨ 09/00
VW		
CADDY II 1.4	AEX, AKV, APQ	11/95 ⇨ 06/03
CADDY II 1.6	AEE	06/97 ⇨ 09/00
CADDY II 60 1.4	AEX, APQ	11/95 ⇨ 01/04
CADDY II 75 1.6	AEE	11/95 ⇨ 09/00
VENTO 1.4	APQ	12/97 ⇨ 05/98

FACET 4.9667 — 07

IGNITION CABLE SETS

Adatt./Suitable:

[00] **Eliminated on 22-02-2022. Please verify the availability through our local distributors**

- Eliminato il 22-02-2022. Verificare la disponibilità presso i nostri distributori
- Eliminé le 22-02-2022. Verifier la disponibilité auprès de nos distributeurs sur place
- Am 22-02-2022 gestrichen. Evtl. Verfügbarkeit bitte bei unseren Händlern prüfen
- Eliminado en fecha 22-02-2022. Verificar la disponibilidad a través de nuestros distribuidores locales

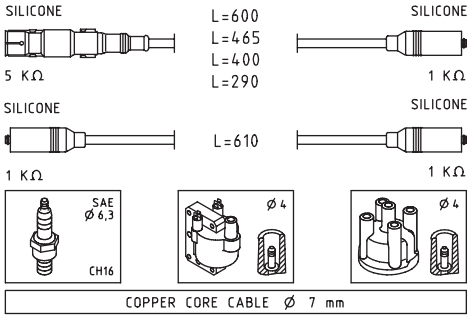

SEAT		
ALHAMBRA I / II 2.0 i	ADY	04/96 ⇨ 03/10
VW		
SHARAN I 2.0	ADY	09/95 ⇨ 03/10

FACET 4.9671 — 07

IGNITION CABLE SETS

Adatt./Suitable:

[00] **Eliminated on 22-02-2022. Please verify the availability through our local distributors**

- Eliminato il 22-02-2022. Verificare la disponibilità presso i nostri distributori
- Eliminé le 22-02-2022. Verifier la disponibilité auprès de nos distributeurs sur place
- Am 22-02-2022 gestrichen. Evtl. Verfügbarkeit bitte bei unseren Händlern prüfen
- Eliminado en fecha 22-02-2022. Verificar la disponibilidad a través de nuestros distribuidores locales

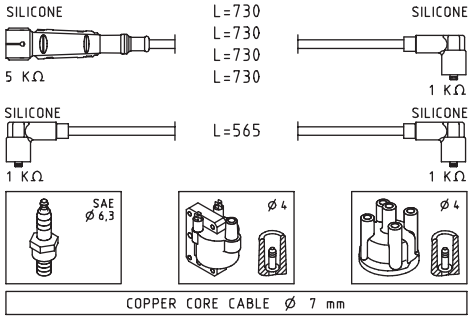

VW		
JETTA II 1.3	MH, NU	01/84 ⇨ 12/87
JETTA II 1.3 Cat	MH, NZ	06/87 ⇨ 12/91
GOLF II 1.0	HZ	08/85 ⇨ 10/91
GOLF II 1.3	MH, NU	08/83 ⇨ 12/87
GOLF II 1.3 Cat	NZ	06/86 ⇨ 12/92
GOLF III 1.4	AEX	10/91 ⇨ 04/99
TRANSPORTER IV 1.8	5K7M710	12/90 ⇨ 07/92
TRANSPORTER IV 2.0	AAC	07/90 ⇨ 04/03

FACET 4.9677 — 07,5

IGNITION CABLE SETS

Adatt./Suitable:

BOSCH
0 986 356 986
CHEVROLET
96190263
96460220
DAEWOO
96190263
96460220
GENERAL MOTORS
96 460 220

[00] **Eliminated on 22-02-2022. Please verify the availability through our local distributors**

- Eliminato il 22-02-2022. Verificare la disponibilità presso i nostri distributori
- Eliminé le 22-02-2022. Verifier la disponibilité auprès de nos distributeurs sur place
- Am 22-02-2022 gestrichen. Evtl. Verfügbarkeit bitte bei unseren Händlern prüfen
- Eliminado en fecha 22-02-2022. Verificar la disponibilidad a través de nuestros distribuidores locales

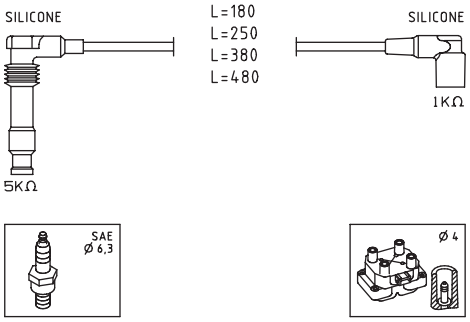

CHEVROLET		
EPICA 2.0	T20SED	01/05 ⇨ 12/06
EVANDA 2.0	X20SED	03/05 ⇨ 12/06
LACETTI 1.8	T18SED	03/05 ⇨
LACETTI 2.0	U20SED	03/05 ⇨
LEGANZA 2.0	--	01/98 ⇨
LEGANZA 2.2	--	01/98 ⇨
NUBIRA 1.8	T18SED	03/05 ⇨ 12/09
OPTRA 1.8	T18SED	08/03 ⇨ 12/08
OPTRA 1.8 SRV	T18SED	06/06 ⇨
OPTRA 2.0	U20SED	06/99 ⇨
REZZO 2.0	T20SED	03/05 ⇨
TACUMA 2.0	X20SED	02/05 ⇨
VIVANT 2.0	X20SED	08/00 ⇨
VIVANT 2.0 CX	T20SED	01/05 ⇨
DAEWOO		
EVANDA 2.0	L88, X20SED	08/02 ⇨
LACETTI 1.8	T18SED	02/04 ⇨
LEGANZA 2.0 16V	T20SED, X20SED	07/00 ⇨ 04/04
LEGANZA 2.2 16V	T22SED	04/99 ⇨ 12/02
NUBIRA I 2.0 16V	T20SED, X20SED, Z20L	12/00 ⇨
NUBIRA I 2.0 CDX	T20SED	08/02 ⇨ 07/03
NUBIRA II 1.8	T18SED	07/03 ⇨
REZZO 2.0	T20SED, X20SED	09/00 ⇨
TACUMA 2.0	X20SED	09/00 ⇨ 01/05

FACET 4.9680 — 07

IGNITION CABLE SETS

Adatt./Suitable:

BOSCH
0 986 356 987
CHEVROLET
96211948
96497773
DAEWOO
96211948
96497773
GENERAL MOTORS
96 497 773
HITACHI
134236
MAGNETI MARELLI
941365030926

[03] **Supplied until depletion**

- Fornibile fino ad esaurimento delle scorte
- Fourni jusqu'à épuisement du stock
- Lieferbar solange vorrat reicht
- Suministrado hasta el stock termina

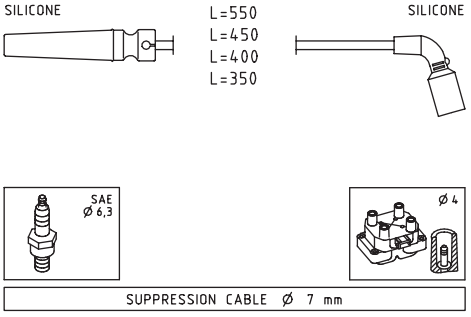

CHEVROLET		
AVEO I 1.4	F14D3, L14	03/05 ⇨ 05/13
AVEO I 1.4 16V	F14D3	05/03 ⇨ 05/08
AVEO I 1.4 CNG	L95	01/10 ⇨
AVEO I 1.6	A16DMS, F16D3, LXT, LXV	09/03 ⇨
CRUZE 1.6	F16D3, LXT	05/09 ⇨
KALOS 1.4 16V	F14D3	03/05 ⇨
LANOS 1.6 16V	A16DMS	11/05 ⇨
REZZO 1.6	A16DMS	03/05 ⇨
TACUMA 1.6	A16DMS	02/05 ⇨
VIVANT 1.6	A16DMS	08/01 ⇨
DAEWOO		
KALOS 1.4	F14D3	05/03 ⇨ 12/04
KALOS 1.4 16V	F14D3	04/03 ⇨
LANOS 1.6 16V	A16DMS	02/97 ⇨
NUBIRA I 1.6 16V	A16DMS	05/97 ⇨
REZZO 1.6	A16DMS	09/00 ⇨
TACUMA 1.6	A16DMS	09/00 ⇨ 01/05

FACET 4.9681 — 07,5

IGNITION CABLE SETS

Adatt./Suitable:

MAGNETI MARELLI
941318111287
RENAULT
77 00 114 549

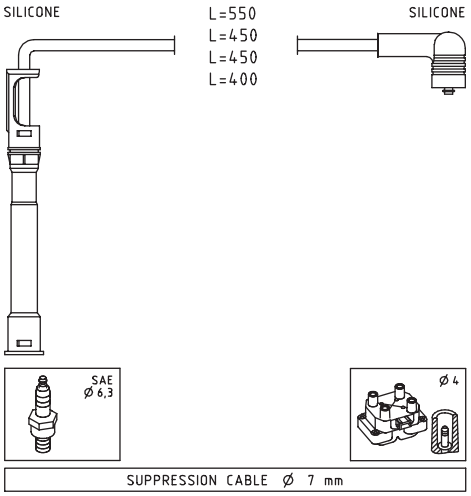

RENAULT		
CLIO II 1.0	D7D760	02/00 ⇨ 05/01
CLIO II 1.2	D7F710, D7F720, D7F722, D7F726, D7F744, D7F746, D7F764, D7F766	03/98 ⇨

RENAULT		
CLIO II 1.2 LPG	D7F722, D7F764, D7F766	09/98 ⇨ 06/09
KANGOO I 1.0	D7D700, D7D760	09/98 ⇨
KANGOO I 1.2	D7F710, D7F720, D7F722, D7F726, D7F744, D7F746	08/97 ⇨
TWINGO I 1.0	D7D740	01/00 ⇨
TWINGO I 1.2	D7F700, D7F701, D7F702, D7F703, D7F704, D7F706	05/96 ⇨

FACET 4.9682 — 07

IGNITION CABLE SETS

Adatt./Suitable:

[00] **Eliminated on 22-02-2022. Please verify the availability through our local distributors**

- Eliminato il 22-02-2022. Verificare la disponibilità presso i nostri distributori
- Eliminé le 22-02-2022. Verifier la disponibilité auprès de nos distributeurs sur place
- Am 22-02-2022 gestrichen. Evtl. Verfügbarkeit bitte bei unseren Händlern prüfen
- Eliminado en fecha 22-02-2022. Verificar la disponibilidad a través de nuestros distribuidores locales

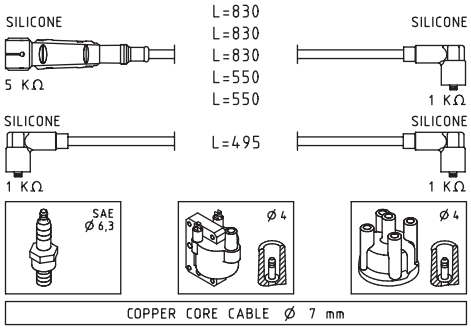

AUDI		
80 II 2.0	HP, JS	10/83 ⇨ 09/84
80 II 2.0 quattro	JS	10/83 ⇨ 09/84
80 IV 2.3 E	NG	09/91 ⇨ 01/96
80 IV 2.3 E quattro	NG	09/91 ⇨ 12/94
90 I 2.0	HP, JL, JS, SK	10/84 ⇨ 03/87
90 I 2.0 quattro	JS	08/84 ⇨ 08/86
90 I 2.2	9C54, HY	10/84 ⇨ 03/87
90 I 2.2 E quattro	9C54	11/84 ⇨ 03/87
90 II 2.0	PS	07/88 ⇨ 09/91
90 II 2.2 E	9C54	04/87 ⇨ 07/91
90 II 2.2 E quattro	9C54	04/87 ⇨ 09/91
90 II 2.3 E	NG	04/87 ⇨ 09/91
90 II 2.3 E quattro	NG	04/87 ⇨ 09/91
100 III 2.0	KP	08/84 ⇨ 12/87
100 III 2.0 Cat	RT	01/88 ⇨ 11/90
100 III 2.0 E	KP	01/85 ⇨ 12/87
100 III 2.0 E Cat	RT	01/88 ⇨ 11/90
100 III 2.2 Cat	KU	06/89 ⇨ 11/90
100 III 2.2 Cat quattro	KU	06/89 ⇨ 11/90
100 III 2.2 E Turbo quattro	MC	08/86 ⇨ 11/90
100 III 2.2 Turbo	MC	08/86 ⇨ 11/90
100 III 2.2 Turbo quattro	MC	08/86 ⇨ 11/90
100 III 2.3	NF	08/86 ⇨ 11/90
100 III 2.3 E	NF	10/86 ⇨ 11/90
100 III 2.3 E quattro	NF	08/86 ⇨ 11/90
100 III 2.3 quattro	NF	01/90 ⇨ 11/90
100 IV 2.3 E	7M15A-FKS	12/90 ⇨ 07/94
100 IV 2.3 E quattro	7M15A-FKS	12/90 ⇨ 07/94
A6 I 2.3	7M15A-FKS	06/94 ⇨ 12/95
CABRIOLET 2.3 E	NG	05/91 ⇨ 07/94
COUPE 2.2	9C54	11/88 ⇨ 07/91
COUPE 2.2 quattro	9C54	11/88 ⇨ 07/91
COUPE 2.3	NG	10/88 ⇨ 12/96
COUPE 2.3 quattro	NG	11/88 ⇨ 12/96

FACET 4.9686 — 07

IGNITION CABLE SETS

Adatt./Suitable:

BOSCH
0 986 356 721

HONDA
32700-P1J-E01

[00] **Eliminated on 22-02-2022. Please verify the availability through our local distributors**
- Eliminato il 22-02-2022. Verificare la disponibilità presso i nostri distributori
- Eliminé le 22-02-2022. Verifier la disponibilité auprès de nos distributeurs sur place
- Am 22-02-2022 gestrichen. Evtl. Verfügbarkeit bitte bei unseren Händlern prüfen
- Eliminado en fecha 22-02-2022. Verificar la disponibilidad a través de nuestros distribuidores locales

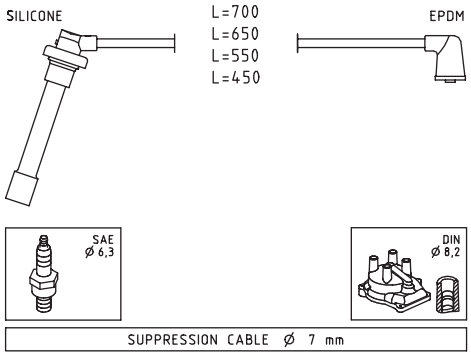

HONDA		
CIVIC VI 1.4 16V	D14A7, D14A8	01/97 ⇨ 02/01
CIVIC VI 1.4 i	D14A8	06/95 ⇨ 02/01
CIVIC VI 1.4i	D14A6	01/99 ⇨
CIVIC VI 1.4i 16V	D14Z3, D14Z4	11/98 ⇨ 12/00
CIVIC VI 1.4i 16V Vtec	D14Z4	01/99 ⇨
CIVIC VI 1.5 16V	D15Z8	01/97 ⇨ 02/01
CIVIC VI 1.6	D16W4	11/98 ⇨ 03/01
CIVIC VI 1.6 16V	D16B2	01/97 ⇨ 02/01
CIVIC VI 1.6i 16V	D16W3	11/98 ⇨ 12/00

FACET 4.9691 — 07

IGNITION CABLE SETS

Adatt./Suitable:

[03] **Supplied until depletion**
- Fornibile fino ad esaurimento delle scorte
- Fourni jusqu'à épuisement du stock
- Lieferbar solange vorrat reicht
- Suministrado hasta el stock termina

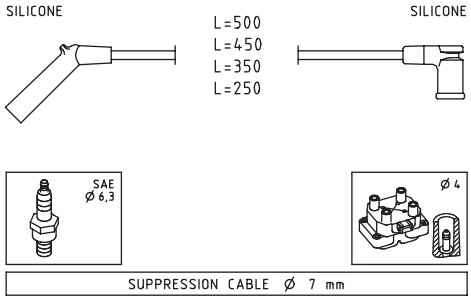

FORD		
IKON 1.3 Rocam	--	10/00 ⇨
IKON 1.6 EFI Rocam	--	11/99 ⇨
FORD (BR)		
FIESTA 1.0i	ZL10	07/99 ⇨
FIESTA 1.6i	ZL16	07/99 ⇨

FACET 4.9699 — 07

IGNITION CABLE SETS

Adatt./Suitable:

BOSCH
0 986 356 721

HONDA
32700-PEL-004

[03] **Supplied until depletion**
- Fornibile fino ad esaurimento delle scorte
- Fourni jusqu'à épuisement du stock
- Lieferbar solange vorrat reicht
- Suministrado hasta el stock termina

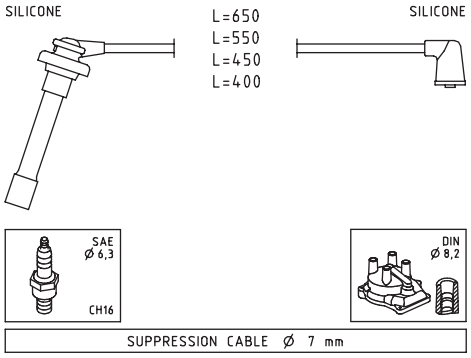

HONDA		
HR-V 1.6 16V	350Y	03/99 ⇨
HR-V 1.6 16V 4WD	350Y, D16W5	03/99 ⇨
HR-V 1.6i 16V	D16W2	04/99 ⇨

FACET 4.9702 — 07

IGNITION CABLE SETS

Adatt./Suitable:

BOSCH
0 986 356 721

HONDA
32722-P2A-000
32722-P2A-003
32722-P2A-J00
32722-P2A-J01
32722-P2F-A02
32722-P2F-A03

[03] **Supplied until depletion**
- Fornibile fino ad esaurimento delle scorte
- Fourni jusqu'à épuisement du stock
- Lieferbar solange vorrat reicht
- Suministrado hasta el stock termina

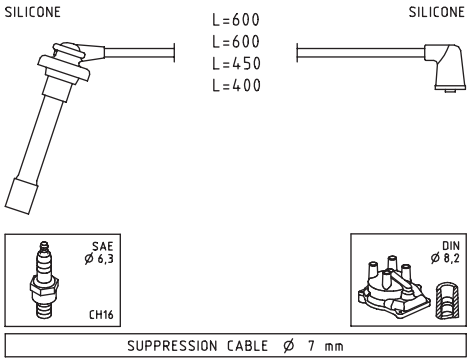

HONDA		
BALLADE 1.5	D15Z4	01/97 ⇨
BALLADE 1.6i	D16Y9	01/96 ⇨ 02/01
CIVIC VI 1.4	D14A4	11/95 ⇨ 10/98
CIVIC VI 1.4 i	D14A3, D14A4, D14Z1, D14Z2	11/95 ⇨ 02/01
CIVIC VI 1.4 i S	D14A4, D14Z2	11/95 ⇨ 02/01
CIVIC VI 1.4i 16V	D14Z1	11/98 ⇨ 03/01
CIVIC VI 1.5 i	D15Z6	11/95 ⇨ 02/01
CIVIC VI 1.6	--	05/96 ⇨ 04/99
CIVIC VI 1.6 i	D16Y5	11/95 ⇨ 02/01
CIVIC VI 1.6 i Vtec	D16Y6, D16Y8	11/95 ⇨ 02/01
CIVIC VI 1.6 VTi	B16A2	11/95 ⇨ 02/01
CIVIC VI 1.6i 16V	D16Y7	01/96 ⇨
CIVIC VI 1.6i 16V Vtec	D16Y8	01/96 ⇨ 09/99
CIVIC V 1.6 i	D16Y7	01/94 ⇨ 11/95
CIVIC V 1.6 i Vtec	D16Y6	01/94 ⇨ 03/96

FACET 4.9709 — 07

IGNITION CABLE SETS

Adatt./Suitable:

BOSCH
0 986 357 150

HONDA
32700-PHK-003
32722-P75-A01

[00] **Eliminated on 24-05-2021. Please verify the availability through our local distributors**
- Eliminato il 24-05-2021. Verificare la disponibilità presso i nostri distributori
- Eliminé le 24-05-2021. Verifier la disponibilité auprès de nos distributeurs sur place
- Am 24-05-2021 gestrichen. Evtl. Verfügbarkeit bitte bei unseren Händlern prüfen
- Eliminado en fecha 24-05-2021. Verificar la disponibilidad a través de nuestros distribuidores locales

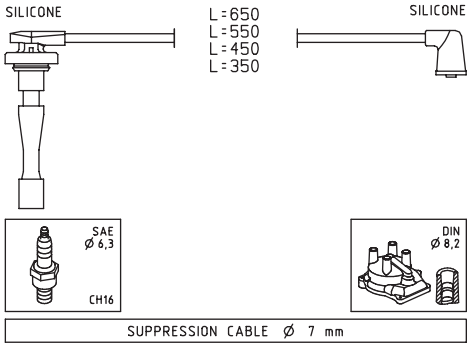

HONDA		
BALLADE 1.8 i	B18B4	01/96 ⇨ 02/01
CR-V I 2.0	B20Z1	04/99 ⇨ 02/02
CR-V I 2.0 16V 4WD	B20B, B20Z1	10/95 ⇨ 02/02
CR-V I 2.0 i 16V	B20B3, B20B4, B20B9, B20Z3	02/97 ⇨ 04/99
INTEGRA 1.8 i	B18B1	01/98 ⇨

FACET 4.9711 — 07,5

IGNITION CABLE SETS

Adatt./Suitable:

BOSCH
0 986 356 776
0 986 AM0 039

HONDA
32700-P0D-000
32700-P0K-G00
32700-P5K-003
32700-P5N-G01
32700-PT0-000
32700-PT0-G00
32701-P14-A00
32701-PT0-000
32702-P14-A00
32702-PT0-000
32703-P14-A00
32703-PT0-000
32704-P14-A00
32704-PT0-000
32722-PT3-A00

MAGNETI MARELLI
941315020889

ROVER
GHT274

[03] **Supplied until depletion**
- Fornibile fino ad esaurimento delle scorte
- Fourni jusqu'à épuisement du stock
- Lieferbar solange vorrat reicht
- Suministrado hasta el stock termina

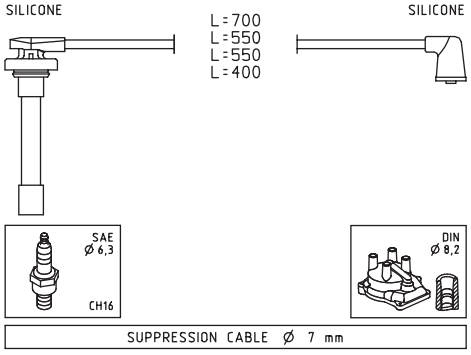

HONDA		
ACCORD IV 1.8	--	01/90 ⇨ 12/91
ACCORD IV 2.0 16V	F20A2, F20A3, F20A5, F20A6	01/90 ⇨ 12/93
ACCORD IV 2.0 i 16V	F20A4, F20A7, F20A8, F20Z3	01/90 ⇨ 12/93

HONDA		
ACCORD IV 2.2	F22A6	05/92 ⇨ 12/93
ACCORD IV 2.2 i 16V	F22A3, F22A7, F22A8	01/90 ⇨ 12/93
ACCORD IV 2.2 i 16V Automatik	F22A3	01/90 ⇨ 03/93
ACCORD V 1.8 16V	F18A3	01/94 ⇨ 12/95
ACCORD V 1.9 i	F18A3	02/96 ⇨ 10/98
ACCORD V 2.0	F20B3	09/93 ⇨ 12/97
ACCORD V 2.0 i	F20Z2	03/93 ⇨ 01/96
ACCORD V 2.0 i LS	F20Z1	02/96 ⇨ 10/98
ACCORD V 2.0 i LS 16V	F20B3	09/93 ⇨ 02/98
ACCORD V 2.0 i S	F20Z1	03/93 ⇨ 01/96
ACCORD V 2.2 16V	F22Z1	01/96 ⇨ 09/98
ACCORD V 2.2 i [USA]	--	01/94 ⇨ 12/95
ACCORD V 2.2 i 16V	F22B4	08/95 ⇨ 12/97
ACCORD V 2.2 i ES	F22B5	09/93 ⇨ 02/98
ODYSSEY 2.2	F22B6	01/95 ⇨ 12/97
PRELUDE IV 2.0 i 16V	F20A4	02/92 ⇨ 09/96
PRELUDE V 2.0 16V	F20A4	10/96 ⇨ 10/00
PRELUDE V 2.2 i 16V	F22A2	10/96 ⇨ 10/01
SHUTTLE 2.2 16V	F22B8	10/94 ⇨ 02/98
ROVER		
600 618 i/Si	F18A3	03/96 ⇨ 02/99
600 620 i	F20Z2	08/93 ⇨ 06/96
600 620 Si	F20Z1	08/93 ⇨ 02/99

FACET 4.9719 — 07,5

IGNITION CABLE SETS

Adatt./Suitable:

MINI
82 11 0 393 996
82 11 0 404 488

[03] **Supplied until depletion**
- Fornibile fino ad esaurimento delle scorte
- Fourni jusqu'à épuisement du stock
- Lieferbar solange vorrat reicht
- Suministrado hasta el stock termina

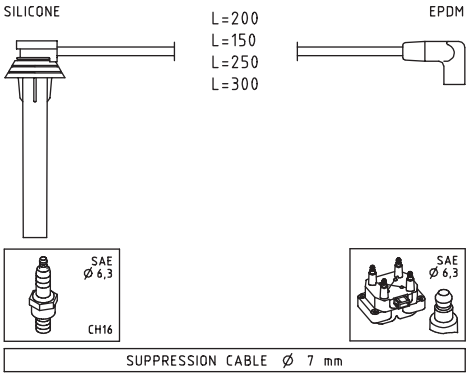

CHRYSLER		
NEON II 1.6	EJD	11/01 ⇨ 12/06
PT CRUISER 1.6	EJD	11/01 ⇨ 12/10
MINI		
MINI I Cooper	W10B16A	06/01 ⇨ 07/08
MINI I Cooper S	W11B16A	03/02 ⇨ 11/07
MINI I John Cooper Works	W11B16A	07/04 ⇨ 11/07
MINI I One	W10B14A, W10B16A	06/01 ⇨ 11/07
MINI I Works	W11B16A	11/03 ⇨ 09/06

FACET 4.9723 — 07

IGNITION CABLE SETS

Adatt./Suitable:

[03] **Supplied until depletion**
- Fornibile fino ad esaurimento delle scorte
- Fourni jusqu'à épuisement du stock
- Lieferbar solange vorrat reicht
- Suministrado hasta el stock termina

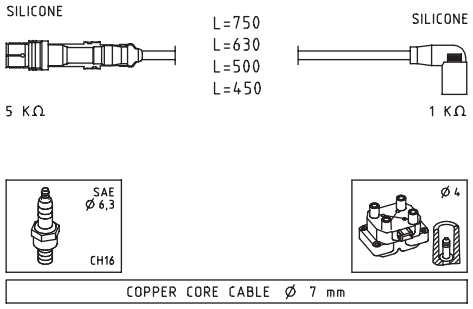

SEAT		
IBIZA III 1.6	BAH	02/03 ⇨ 11/09
CORDOBA II 1.6	BAH	04/03 ⇨ 11/09
VOLKSWAGEN (BR)		
POLO 1.6	BAH, BPA, CCRA	02/02 ⇨
VW		
FOX 1.0	--, AQZ, BNX, CCNA	10/03 ⇨
FOX 1.0 Alcohol	BJE, BNX	10/03 ⇨
FOX 1.0 Total Flex	CCNA	03/08 ⇨
FOX 1.4	BKR	04/05 ⇨ 12/09
FOX 1.6	BAH, BLH, BPA, CCRA, CFZA	10/03 ⇨ 08/14
FOX 1.6 Alcohol	--	10/03 ⇨
FOX 1.6 Total Flex	BJA, BPA, CCRA	10/03 ⇨ 08/14
POLO IV 1.4	BLM	08/02 ⇨ 08/10
POLO IV 1.6	BAH, BPA	08/02 ⇨
POLO IV 1.6 Flex	BPA	12/04 ⇨ 10/14
POLO IV 1.6 Total Flex	BPA	10/04 ⇨ 06/06
SPACEFOX / SPACE CROSS 1.6	BAH, BLH	03/06 ⇨
SPACEFOX / SPACE CROSS 1.6 FSI	BPA, CCRA, CFZA	03/06 ⇨
SPACEFOX / SPACE CROSS 1.6 Total Flex	BPA, CCRA, CFZA	03/06 ⇨

FACET 4.9729 — 05

IGNITION CABLE SETS

Adatt./Suitable:

BOSCH
0 986 357 266
HITACHI
134953
MAZDA
ZL01-18-140A

[00] **Eliminated on 07-06-2021. Please verify the availability through our local distributors**
- Eliminato il 07-06-2021. Verificare la disponibilità presso i nostri distributori
- Eliminé le 07-06-2021. Verifier la disponibilité auprès de nos distributeurs sur place
- Am 07-06-2021 gestrichen. Evtl. Verfügbarkeit bitte bei unseren Händlern prüfen
- Eliminado en fecha 07-06-2021. Verificar la disponibilidad a través de nuestros distribuidores locales

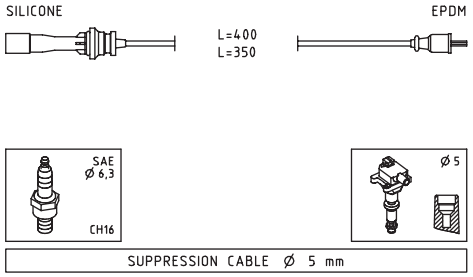

MAZDA		
323 VIII F 1.5 16V	ZL05, ZL06	09/98 ⇨ 01/01
323 VIII F 1.6	ZM	01/01 ⇨ 05/04
323 VIII S 1.5 16V	ZL05, ZL06	09/98 ⇨ 01/01
323 VIII S 1.6	ZM	01/01 ⇨ 05/04
PROTEGE 1.6i [USA]	--	06/98 ⇨

FACET 4.9730 — 07

IGNITION CABLE SETS

Adatt./Suitable:

CHEVROLET
96342284
DAEWOO
96342284
GENERAL MOTORS
96 342 284

[03] **Supplied until depletion**
- Fornibile fino ad esaurimento delle scorte
- Fourni jusqu'à épuisement du stock
- Lieferbar solange vorrat reicht
- Suministrado hasta el stock termina

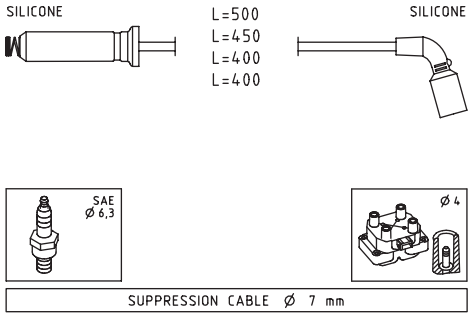

CHEVROLET		
VIVANT 1.8	F18S2	05/00 ⇨
DAEWOO		
REZZO 1.8	--, A18DMS, F18D2	09/00 ⇨
TACUMA 1.8	F18S2	09/00 ⇨

FACET 4.9731 — 07

IGNITION CABLE SETS

Adatt./Suitable:

BOSCH
0 986 356 980
CHEVROLET
96305387
DAEWOO
96305387
HITACHI
134239

[03] **Supplied until depletion**
- Fornibile fino ad esaurimento delle scorte
- Fourni jusqu'à épuisement du stock
- Lieferbar solange vorrat reicht
- Suministrado hasta el stock termina

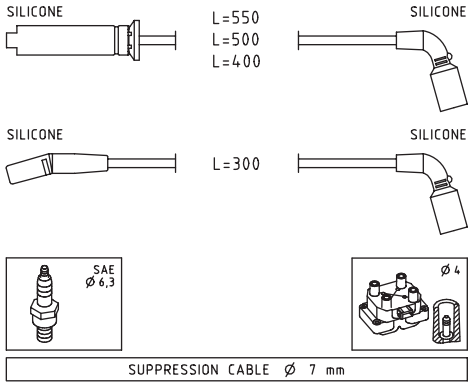

CHEVROLET		
AVEO I 1.4	F14S3	03/05 ⇨
AVEO I 1.5	F15S3	01/05 ⇨
LANOS 1.3	--	01/97 ⇨
LANOS 1.5	A15SMS	11/05 ⇨
DAEWOO		
KALOS 1.4	F14S3	09/02 ⇨
LANOS 1.3	A14SMS	05/97 ⇨
LANOS 1.5	A15SMS	05/97 ⇨

FACET 4.9732 — 07,5

IGNITION CABLE SETS

Adatt./Suitable:

BOSCH
0 986 357 277

DAIHATSU
19901-87186-000
19901-87196-000
90048-66019-000

[03] **Supplied until depletion**
- Fornibile fino ad esaurimento delle scorte
- Fourni jusqu'à épuisement du stock
- Lieferbar solange vorrat reicht
- Suministrado hasta el stock termina

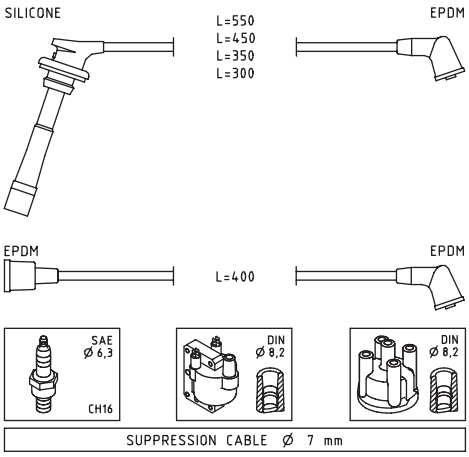

DAIHATSU		
FEROZA 1.6 16V	HD-C	10/88 ⇨ 12/99
FEROZA 1.6 16V 4x4	HD-C	10/88 ⇨ 12/99
FEROZA 1.6 i 16V	HD-E	10/88 ⇨ 12/99
FEROZA 1.6 i 16V 4x4	HD-E	10/88 ⇨ 12/99
FEROZA 1.6i	--	01/90 ⇨
ROCKY 2.0i [USA]	--	01/89 ⇨
SPORTRACK 1.6 16v 4x4	HD-C	10/88 ⇨ 08/93

FACET 4.9738 — 07,5

IGNITION CABLE SETS

Adatt./Suitable:

BOSCH
0 986 357 149

HITACHI
134298

MAZDA
Z501-18-140
Z501-18-140A

[00] **Eliminated on 22-02-2022. Please verify the availability through our local distributors**
- Eliminato il 22-02-2022. Verificare la disponibilità presso i nostri distributori
- Eliminé le 22-02-2022. Verifier la disponibilité auprès de nos distributeurs sur place
- Am 22-02-2022 gestrichen. Evtl. Verfügbarkeit bitte bei unseren Händlern prüfen
- Eliminado en fecha 22-02-2022. Verificar la disponibilidad a través de nuestros distribuidores locales

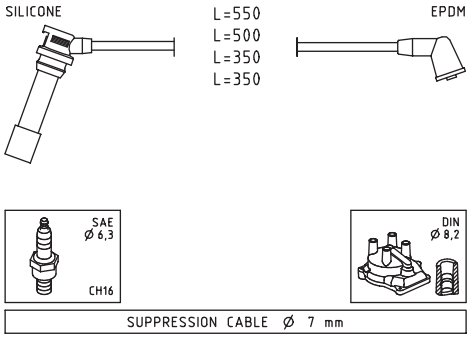

MAZDA		
323 VII C 1.5 16V	Z5-DE	08/94 ⇨ 09/98
323 VII 1.5 16V	Z5-DE	07/94 ⇨ 09/98
323 VII P 1.5 16V	Z5-DE	10/96 ⇨ 09/98
323 VIII S 1.5 16V	Z5-DE	08/94 ⇨ 09/98

FACET 4.9739 — 08

IGNITION CABLE SETS

Adatt./Suitable:

HITACHI
134273

MAZDA
FSD7-18-140B

[03] **Supplied until depletion**
- Fornibile fino ad esaurimento delle scorte
- Fourni jusqu'à épuisement du stock
- Lieferbar solange vorrat reicht
- Suministrado hasta el stock termina

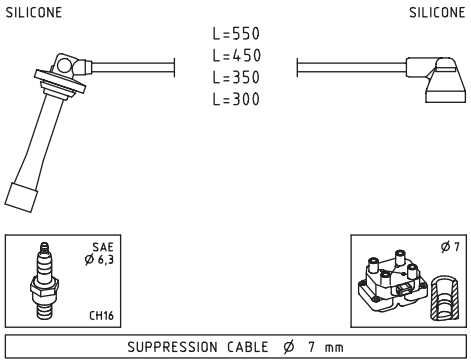

MAZDA		
626 VI 1.8	FP, FP9A, FPY3	05/97 ⇨ 10/02
626 VI 2.0	FS, FS2C	05/97 ⇨ 10/02
626 VI 2.0 H.P.	FS2C	02/98 ⇨ 10/02

FACET 4.9740 — 07,5

IGNITION CABLE SETS

Adatt./Suitable:

MAZDA
FP39-18-140
FP39-18-140A

[03] **Supplied until depletion**
- Fornibile fino ad esaurimento delle scorte
- Fourni jusqu'à épuisement du stock
- Lieferbar solange vorrat reicht
- Suministrado hasta el stock termina

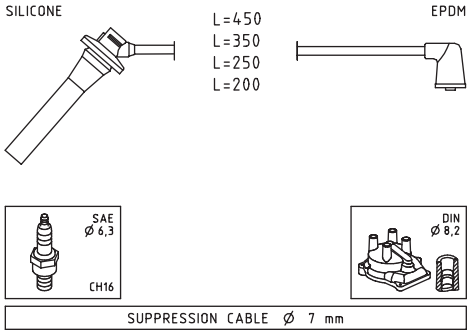

MAZDA		
323 VIII F 1.9 16V	FP, FP55	09/98 ⇨ 01/01
323 VIII S 1.9 16V	FP, FP55	09/98 ⇨ 05/04
PROTEGE 1.8i [USA]	--	06/98 ⇨

FACET 4.9741 — 07

IGNITION CABLE SETS

Adatt./Suitable:

BOSCH
0 986 357 195

MAZDA
B33G-18-140A
B33G-18-140B

[00] **Eliminated on 25-11-2020. Please verify the availability through our local distributors**
- Eliminato il 25-11-2020. Verificare la disponibilità presso i nostri distributori
- Eliminé le 25-11-2020. Verifier la disponibilité auprès de nos distributeurs sur place
- Am 25-11-2020 gestrichen. Evtl. Verfügbarkeit bitte bei unseren Händlern prüfen
- Eliminado en fecha 25-11-2020. Verificar la disponibilidad a través de nuestros distribuidores locales

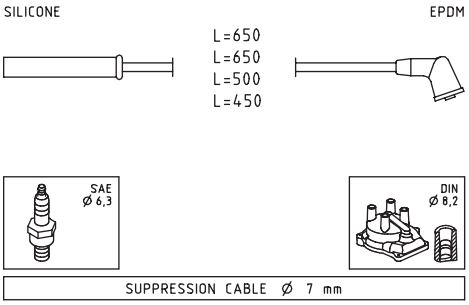

MAZDA		
323 VIII F 1.4	B3(16V)	01/01 ⇨ 05/04
323 VIII F 1.4 16V	B3ME	09/98 ⇨ 01/01
323 VIII S 1.3	B3(16V)	01/01 ⇨ 05/04
323 VIII S 1.3 16V	B3ME	09/98 ⇨ 01/01

FACET 4.9745 — 07,5

IGNITION CABLE SETS

Adatt./Suitable:

BOSCH
0 986 356 742

HITACHI
134286

MAZDA
B61P-18-140C
B6MC-18-140B
BPE8-18-140
BPE8-18-140A

[03] **Supplied until depletion**
- Fornibile fino ad esaurimento delle scorte
- Fourni jusqu'à épuisement du stock
- Lieferbar solange vorrat reicht
- Suministrado hasta el stock termina

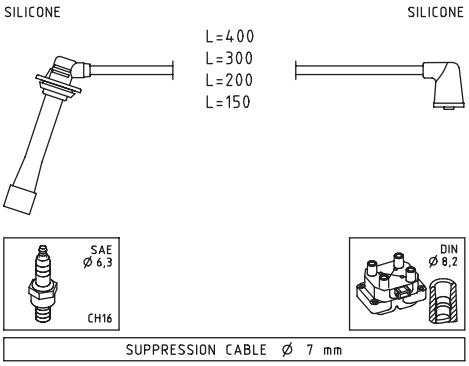

MAZDA		
MIATA 1.6i 16v	CE16I	03/90 ⇨ 08/93
MIATA 1.6i 16v GT	CE16T	11/90 ⇨ 08/93
MIATA 1.8i [USA]	--	01/94 ⇨
MX-5 I 1.6	8AN1, B64F	05/90 ⇨ 04/98
MX-5 I 1.8	BPF1	01/93 ⇨ 04/98
MX-5 II 1.6 16V	B6D	05/98 ⇨ 10/05
MX-5 II 1.8	BP6J, BPD	08/02 ⇨ 10/05
MX-5 II 1.8 16V	BPD, BP-ZE	11/00 ⇨ 10/05

FACET 4.9753 — 07

IGNITION CABLE SETS

Adatt./Suitable:

BOSCH
0 986 357 157
MAGNETI MARELLI
941285120871
MITSUBISHI
MD332343

[03] **Supplied until depletion**
- Fornibile fino ad esaurimento delle scorte
- Fourni jusqu'à épuisement du stock
- Lieferbar solange vorrat reicht
- Suministrado hasta el stock termina

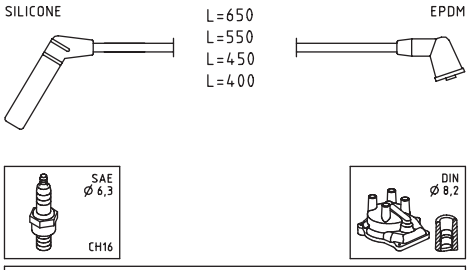

MITSUBISHI		
COLT V 1.5	301353C	09/95 ⇨ 09/03
COLT V 1.5 16V	301353C	10/99 ⇨ 09/03
COLT V 1300 GL,GLX	4G13(12V)	05/96 ⇨ 06/00
LANCER VII 1.3 12V	4G13(12V)	12/95 ⇨ 08/03
LANCER VII 1.5	301353C	06/00 ⇨ 08/03
LANCER VII 1.5 16V	301353C	10/99 ⇨ 08/03

FACET 4.9760 — 09

IGNITION CABLE SETS

Adatt./Suitable:

BOSCH
0 986 356 966
MAZDA
0000-18-135A
8BGP-18-140
8BGP-18-140A
8BGP-18-140B
8BGP-18-140C
K834-18-140A
KF33-18-140C
KF33-18-140D
KF33-18-140E
KL01-18-140C
KL47-18-140B
KL47-18-140C

[00] **Eliminated on 22-02-2022. Please verify the availability through our local distributors**
- Eliminato il 22-02-2022. Verificare la disponibilità presso i nostri distributori
- Eliminé le 22-02-2022. Verifier la disponibilité auprès de nos distributeurs sur place
- Am 22-02-2022 gestrichen. Evtl. Verfügbarkeit bitte bei unseren Händlern prüfen
- Eliminado en fecha 22-02-2022. Verificar la disponibilidad a través de nuestros distribuidores locales

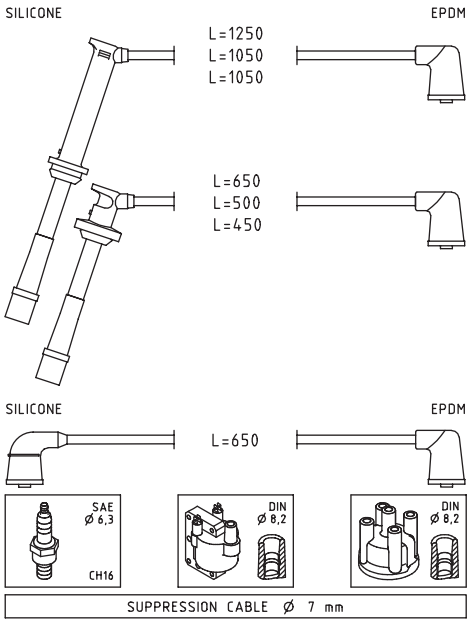

MAZDA		
323 VII 2.0 24V	KF	08/94 ⇨ 09/98
626 V 2.5 24V	KL	01/92 ⇨ 04/97
MX-3 1.8 i V6	K838, K8-ZE	01/94 ⇨ 10/97
MX-6 2.5 24V	KL	02/92 ⇨ 09/97
MX-6 2.5 i 24V	KL	08/94 ⇨ 02/97
XEDOS 6 2.0 V6	KF1	01/92 ⇨ 10/99
XEDOS 9 2.0	KF	08/98 ⇨ 08/00
XEDOS 9 2.0 24V	KF	08/93 ⇨ 01/00
XEDOS 9 2.5 24V	KL	07/93 ⇨ 07/00

FACET 4.9764 — 07

IGNITION CABLE SETS

Adatt./Suitable:

CHRYSLER
MD338 624
HITACHI
134613
MITSUBISHI
MD334043
MD336862
MD338624

[00] **Eliminated on 07-06-2021. Please verify the availability through our local distributors**
- Eliminato il 07-06-2021. Verificare la disponibilità presso i nostri distributori
- Eliminé le 07-06-2021. Verifier la disponibilité auprès de nos distributeurs sur place
- Am 07-06-2021 gestrichen. Evtl. Verfügbarkeit bitte bei unseren Händlern prüfen
- Eliminado en fecha 07-06-2021. Verificar la disponibilidad a través de nuestros distribuidores locales

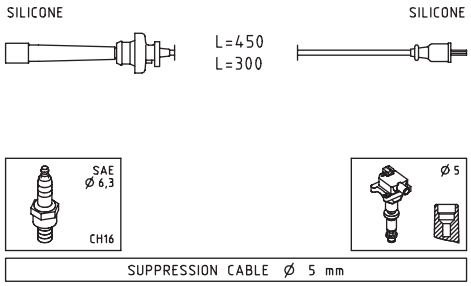

CHRYSLER		
SEBRING II 2.4	EDZ, EY7	10/00 ⇨
MITSUBISHI		
CARISMA 1.6	4G92(SOHC16V)	09/00 ⇨ 06/06
CARISMA 1.8	4G93(SOHC16V)	07/95 ⇨ 09/97
COLT V 1600	4G92(SOHC16V)	09/00 ⇨ 09/03
COLT V 1600 GLX	4G92(SOHC16V)	05/96 ⇨ 09/00
GRANDIS 2.0	4G63(SOHC8V)	04/04 ⇨
SPACE WAGON 2.0 16V	4G63(DOHC16V)	06/00 ⇨
SPACE WAGON 2.4 GDI	4G64(GDI)	07/98 ⇨
SPACE WAGON 2.4 GDi GLX	4G64(GDI)	08/00 ⇨ 05/03
GALANT VIII 2.0	4G63(SOHC16V)	09/00 ⇨ 10/04
LANCER VII 1.6 16V	4G92(SOHC16V)	12/95 ⇨ 08/03
MONTERO IO 1.8 GDI	4G93(SOHC16V)	08/99 ⇨
PAJERO PININ 1.8	4G93(SOHC16V)	11/01 ⇨ 06/07
PAJERO PININ 1.8 GDI	4G93(GDI)	10/99 ⇨ 10/01
SPACE RUNNER 2.0	--, 4G63(SOHC16V)	01/92 ⇨ 08/02
SPACE STAR 1.8 GDI	4G93(GDI)	06/98 ⇨ 12/04
SPACE STAR 1.8 MPI	4G93(DOHC16V)	10/02 ⇨ 12/04

FACET 4.9767 — 07

IGNITION CABLE SETS

Adatt./Suitable:

[03] **Supplied until depletion**
- Fornibile fino ad esaurimento delle scorte
- Fourni jusqu'à épuisement du stock
- Lieferbar solange vorrat reicht
- Suministrado hasta el stock termina

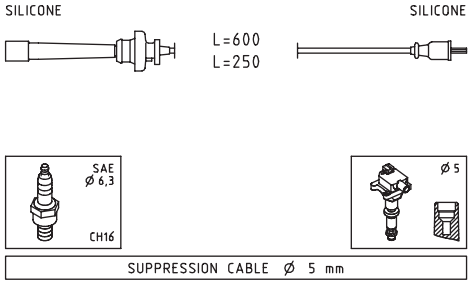

MAZDA		
323 VIII F 1.8 Astina	BP(DOHC)	09/98 ⇨ 05/04
323 VIII F 2.0	FS, FS7E, FS7G	02/00 ⇨ 09/04
323 VIII S 1.8 Protege	BP(DOHC)	05/98 ⇨ 05/04
323 VIII S 2.0	FS, FS7E, FS7G	02/00 ⇨ 05/04
MPV II 2.0	FS-DS	09/99 ⇨ 08/00
PREMACY 1.9	FP	07/99 ⇨ 03/05

FACET 4.9789 — 07

IGNITION CABLE SETS

Adatt./Suitable:

FORD
1 960 394
1 961 207
NISSAN
22440-1S700
22440-1S710
22440-8B000

[00] **Eliminated on 27-09-2021. Please verify the availability through our local distributors**
- Eliminato il 27-09-2021. Verificare la disponibilità presso i nostri distributori
- Eliminé le 27-09-2021. Verifier la disponibilité auprès de nos distributeurs sur place
- Am 27-09-2021 gestrichen. Evtl. Verfügbarkeit bitte bei unseren Händlern prüfen
- Eliminado en fecha 27-09-2021. Verificar la disponibilidad a través de nuestros distribuidores locales

[03] **Supplied until depletion**
- Fornibile fino ad esaurimento delle scorte
- Fourni jusqu'à épuisement du stock
- Lieferbar solange vorrat reicht
- Suministrado hasta el stock termina

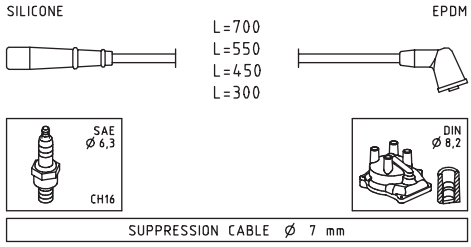

FORD		
MAVERICK 2.4 i	KA24	09/96 ⇨ 04/98
NISSAN		
PICK UP II 2.4 i	KA24E	02/98 ⇨ 04/05
PICK UP II 2.4 i 4WD	KA24E	02/98 ⇨ 04/05
TERRANO II 2.4 4WD	KA24E	05/96 ⇨ 09/07
TERRANO II 2.4 i 12V 4WD	KA24E	02/93 ⇨ 12/97

FACET 4.9792 — 07,5

IGNITION CABLE SETS

Adatt./Suitable:

TOYOTA
90919-22387

[00] **Eliminated on 22-02-2022. Please verify the availability through our local distributors**

- Eliminato il 22-02-2022. Verificare la disponibilità presso i nostri distributori
- Eliminé le 22-02-2022. Verifier la disponibilité auprès de nos distributeurs sur place
- Am 22-02-2022 gestrichen. Evtl. Verfügbarkeit bitte bei unseren Händlern prüfen
- Eliminado en fecha 22-02-2022. Verificar la disponibilidad a través de nuestros distribuidores locales

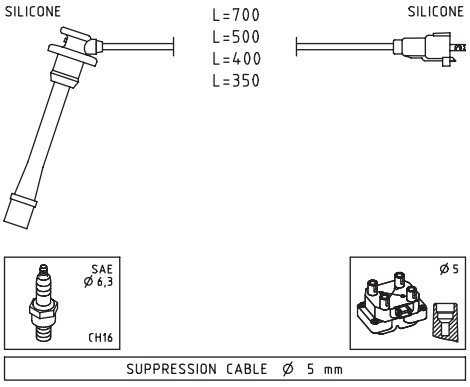

TOYOTA		
4 RUNNER 2.7 16V	3RZ-FE	11/95 ⇨ 08/00
4 RUNNER 2.7 i	3RZ-FE	11/95 ⇨ 03/96
COASTER 2.7	3RZFE	07/99 ⇨
DYNA 200 2.7	3RZ-FE	06/95 ⇨ 07/01
HIACE IV 2.7	3RZ-FE	04/98 ⇨ 12/06
HIACE IV 2.7 4WD	3RZ-FE	04/98 ⇨ 08/06
HILUX VI 2.4 i 4WD	2RZ-FE	08/97 ⇨ 10/05
LAND CRUISER 2.7	3RZ-FE	09/02 ⇨ 08/04
T100 2.7 i [USA]	3RZFE	10/93 ⇨ 07/98
TACOMA 2.4 i [USA]	2RZFE	01/95 ⇨
TACOMA 2.7 i [USA]	3RZFE	02/98 ⇨

FACET 4.9793 — 07,5

IGNITION CABLE SETS

Adatt./Suitable:

BOSCH
0 986 AM0 035

HOLDEN
9091922370

TOYOTA
90919-22369
90919-22370

[00] **Eliminated on 16-12-2020. Please verify the availability through our local distributors**

- Eliminato il 16-12-2020. Verificare la disponibilità presso i nostri distributori
- Eliminé le 16-12-2020. Verifier la disponibilité auprès de nos distributeurs sur place
- Am 16-12-2020 gestrichen. Evtl. Verfügbarkeit bitte bei unseren Händlern prüfen
- Eliminado en fecha 16-12-2020. Verificar la disponibilidad a través de nuestros distribuidores locales

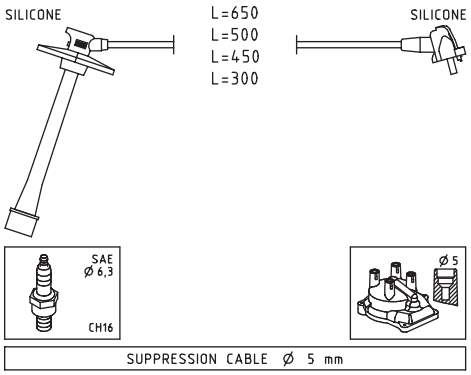

HOLDEN		
APOLLO 2.2 i	08GR-FXS	03/93 ⇨ 05/97
TOYOTA		
CAMRY 2.2	5S-FE	06/91 ⇨ 07/96
CARINA E 2.0	3S-FE	01/93 ⇨ 09/97
CARINA E 2.0 GLI	3S-FE	04/92 ⇨ 09/97
CARINA E 2.0 GTi	3S-GE	04/92 ⇨ 12/95
CARINA E 2.0 GTi 16V	3S-GE	03/94 ⇨ 09/97
CARINA E 2.0 i	3S-FE	12/92 ⇨ 09/97
CELICA V 2.2	5S-FE	10/89 ⇨ 12/94
FUNCRUISER 2.0 i 16V 4WD	3SFE	04/94 ⇨
MR 2 II 2.2 16V	5S-FE	01/90 ⇨ 06/95
CELICA VI 2.2 GT	5S-FE	11/93 ⇨ 08/99
RAV 4 I 2.0	3S-FE	06/97 ⇨ 09/99
RAV 4 I 2.0 4WD	3S-FE	01/94 ⇨ 06/00

FACET 4.9813 — 07,5

IGNITION CABLE SETS

Adatt./Suitable:

[03] **Supplied until depletion**

- Fornibile fino ad esaurimento delle scorte
- Fourni jusqu'à épuisement du stock
- Lieferbar solange vorrat reicht
- Suministrado hasta el stock termina

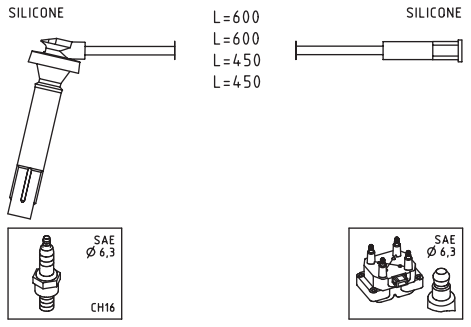

SUBARU		
IMPREZA I 1.8 i	EJ181	08/92 ⇨ 12/00
IMPREZA I 2.0	EJ201	09/98 ⇨ 09/00
IMPREZA I 2.0 i	EJ201	09/98 ⇨ 09/00
IMPREZA I 2.0 i 16V AWD	EJ20, EJ20E	06/98 ⇨ 12/00
IMPREZA I 2.0 i AWD	EJ201	06/98 ⇨ 12/00
IMPREZA I 2.2 i	EJ22E, EJ22EZ	11/93 ⇨ 08/98
IMPREZA I 2.5 i	EJ253	11/93 ⇨ 08/98
IMPREZA II 2.0 AWD	EJ20	12/00 ⇨ 12/07
IMPREZA II 2.0 i AWD	EJ201	12/00 ⇨ 06/09
IMPREZA II 2.5 AWD	EJ25	03/01 ⇨ 09/05
IMPREZA II 2.5 i AWD	EJ251	12/02 ⇨ 09/05
FORESTER II 2.0 AWD	EJ20, EJ201	06/02 ⇨ 05/05
FORESTER II 2.5	EJ251	02/02 ⇨
LEGACY III 2.0	EJ201	12/98 ⇨ 08/03
LEGACY III 2.0 AWD	EJ201	12/98 ⇨ 08/03
LEGACY III 2.5	EJ251	10/98 ⇨ 08/03
LEGACY III 2.5 AWD	EJ25	10/98 ⇨ 08/03
OUTBACK II 2.5 AWD	EJ25	10/00 ⇨ 08/03
FORESTER I 2.0 AWD	EJ202	08/97 ⇨ 09/02

FACET 4.9817 — 07,5

IGNITION CABLE SETS

Adatt./Suitable:

[00] **Eliminated on 16-12-2019. Please verify the availability through our local distributors**

- Eliminato il 16-12-2019. Verificare la disponibilità presso i nostri distributori
- Eliminé le 16-12-2019. Verifier la disponibilité auprès de nos distributeurs sur place
- Am 16-12-2019 gestrichen. Evtl. Verfügbarkeit bitte bei unseren Händlern prüfen
- Eliminado en fecha 16-12-2019. Verificar la disponibilidad a través de nuestros distribuidores locales

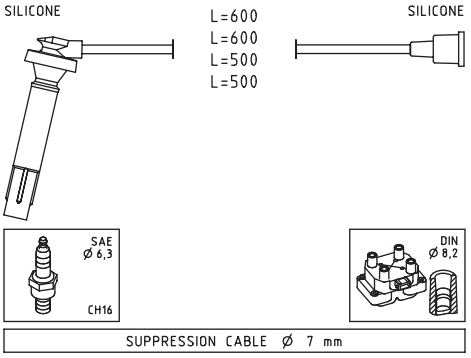

SUBARU		
FORESTER I 2.0 AWD	EJ202	08/97 ⇨ 09/02

FACET 4.9819 — 07,5

IGNITION CABLE SETS

Adatt./Suitable:

[03] **Supplied until depletion**

- Fornibile fino ad esaurimento delle scorte
- Fourni jusqu'à épuisement du stock
- Lieferbar solange vorrat reicht
- Suministrado hasta el stock termina

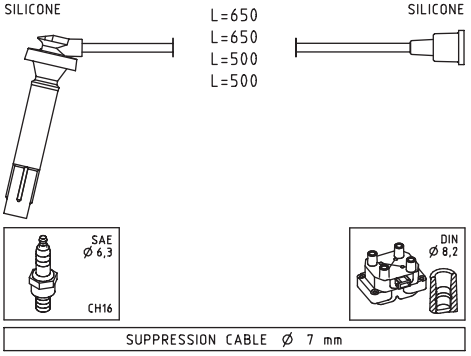

SUBARU		
IMPREZA I 1.6	EJ161	09/98 ⇨ 09/00
IMPREZA I 1.6 i	EJ161	06/98 ⇨ 12/00
IMPREZA I 1.6 i AWD	EJ161	06/98 ⇨ 12/00
IMPREZA II 1.6 AWD	8F140GA, EJ161	12/00 ⇨ 06/09

FACET 4.9823 — 07

IGNITION CABLE SETS

Adatt./Suitable:

TOYOTA
90919-22209
90919-22210

[03] **Supplied until depletion**
- Fornibile fino ad esaurimento delle scorte
- Fourni jusqu'à épuisement du stock
- Lieferbar solange vorrat reicht
- Suministrado hasta el stock termina

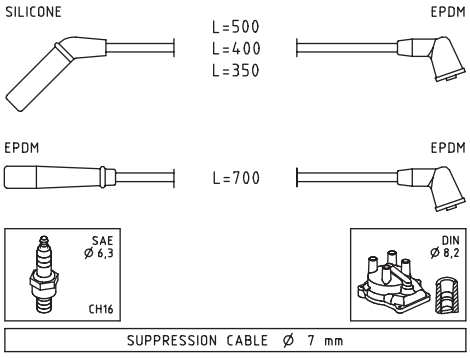

TOYOTA		
COROLLA VI 1.3	2E	05/87 ⇨ 06/92
COROLLA VI 1.3 i	2E, 2E-E	08/87 ⇨ 06/92
STARLET 1.3 12V	2E, 2E-E	12/89 ⇨ 12/92
STARLET 1.3 12V Cat	2E-E	12/89 ⇨ 03/96
STARLET 1.3 XL	2E	12/89 ⇨ 12/91

FACET 4.9835 — 07,5

IGNITION CABLE SETS

Adatt./Suitable:

[03] **Supplied until depletion**
- Fornibile fino ad esaurimento delle scorte
- Fourni jusqu'à épuisement du stock
- Lieferbar solange vorrat reicht
- Suministrado hasta el stock termina

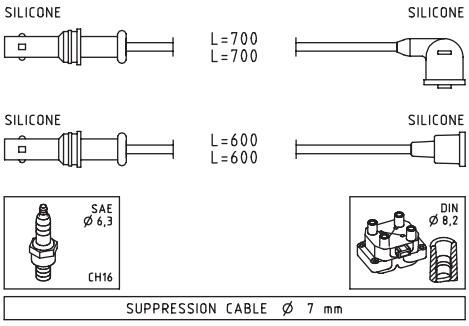

SUBARU		
IMPREZA I 1.6	EJ16E	01/93 ⇨ 12/00
IMPREZA I 1.6 i	8F140GA	08/92 ⇨ 12/00
IMPREZA I 1.6 i AWD	8F140GA	08/92 ⇨ 12/00
IMPREZA I 1.8	EJ18	01/93 ⇨ 10/95
IMPREZA I 1.8 i	EJ18E	11/95 ⇨ 06/96
IMPREZA I 1.8 i AWD	EJ18, EJ18E	08/92 ⇨ 12/00
LEGACY II 1.8 4WD	EJ18E	05/96 ⇨ 09/98
LEGACY II 2.0 i	EJ20EMPI	09/94 ⇨ 03/99
LEGACY II 2.0 i 4WD	EJ201, EJ20E	09/94 ⇨ 03/99
FORESTER I 2.0	EJ20J	08/97 ⇨ 09/02

FACET 4.9841 — 05

IGNITION CABLE SETS

Adatt./Suitable:

[03] **Supplied until depletion**
- Fornibile fino ad esaurimento delle scorte
- Fourni jusqu'à épuisement du stock
- Lieferbar solange vorrat reicht
- Suministrado hasta el stock termina

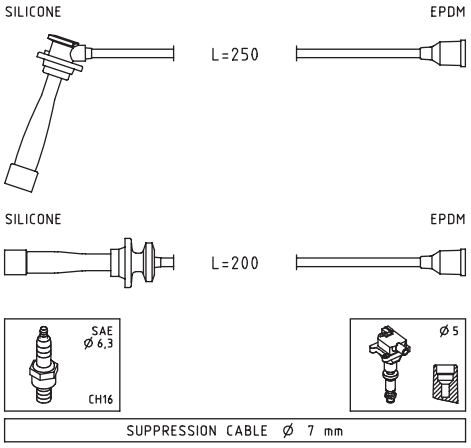

KIA		
CARENS I 1.8	TB	07/02 ⇨
CARENS I 1.8 i	T8	11/00 ⇨ 07/02
CLARUS 1.8 i 16V	T8	07/96 ⇨
SEPHIA I 1.5 i	B5	02/96 ⇨ 10/97
SEPHIA I 1.8 i 16V	--, OK24N, OK26Y	01/95 ⇨ 10/97
SHUMA I 1.5	OK280	03/96 ⇨ 12/98
SHUMA I 1.5 i 16V	BFD, ZY-VE	10/97 ⇨ 10/01
SHUMA I 1.8 i 16V	T8	10/97 ⇨ 03/01
SHUMA II 1.8	T8	05/01 ⇨ 08/04
SPECTRA 1.5 i	--	09/97 ⇨
SPECTRA 1.5 i 16V	--	09/97 ⇨
SPECTRA 1.8 i 16V	--	09/97 ⇨
SEPHIA 1.5 i 16V	--	09/97 ⇨
SEPHIA 1.8 i 16V	--	09/97 ⇨

FACET 4.9851 — 07

IGNITION CABLE SETS

Adatt./Suitable:

KIA
0K30A-18-140A
0K30B-18140
27401-2X000

[03] **Supplied until depletion**
- Fornibile fino ad esaurimento delle scorte
- Fourni jusqu'à épuisement du stock
- Lieferbar solange vorrat reicht
- Suministrado hasta el stock termina

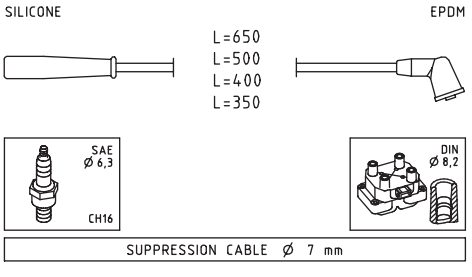

KIA		
RIO I 1.3	A3E	08/00 ⇨ 02/05

FACET 4.9856 — 07,5

IGNITION CABLE SETS

Adatt./Suitable:

BOSCH
0 986 AM0 063

TOYOTA
90919-22386
90919-22400

[03] **Supplied until depletion**
- Fornibile fino ad esaurimento delle scorte
- Fourni jusqu'à épuisement du stock
- Lieferbar solange vorrat reicht
- Suministrado hasta el stock termina

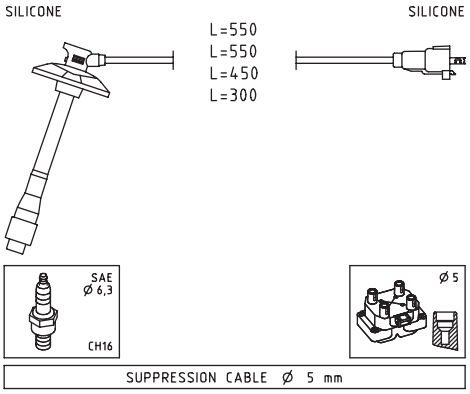

TOYOTA		
AVENSIS I 2.0	3S-FE	09/97 ⇨ 10/00
CAMRY 2.2	5S-FE, 5S-FNE	08/96 ⇨
CAMRY SOLARA I 2.2	5S-FE	06/98 ⇨ 11/02
FUNCRUISER 2.0 i 16V 4WD	3SFE	04/94 ⇨
PICNIC I 2.0	3S-FE	06/00 ⇨ 12/01
PICNIC I 2.0 16V	3S-FE	08/96 ⇨ 09/00
RAV 4 I 2.0	3S-FE	06/97 ⇨ 09/99
RAV 4 I 2.0 4WD	3S-FE	01/94 ⇨ 06/00

FACET 4.9879 — 07,5

IGNITION CABLE SETS

Adatt./Suitable:

TOYOTA
90998-99001
90998-99002

[00] **Eliminated on 16-09-2019. Please verify the availability through our local distributors**
- Eliminato il 16-09-2019. Verificare la disponibilità presso i nostri distributori
- Eliminé le 16-09-2019. Verifier la disponibilité auprès de nos distributeurs sur place
- Am 16-09-2019 gestrichen. Evtl. Verfügbarkeit bitte bei unseren Händlern prüfen
- Eliminado en fecha 16-09-2019. Verificar la disponibilidad a través de nuestros distribuidores locales

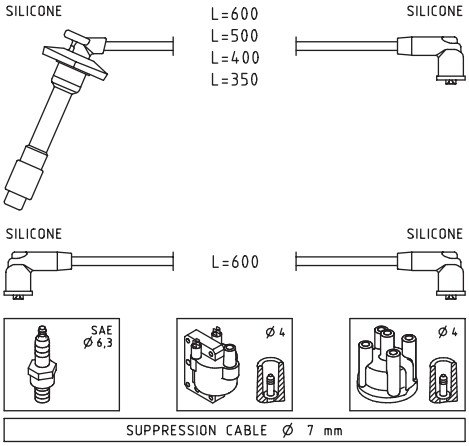

TOYOTA		
AVENSIS I 1.6	4A-FE	09/97 ⇨ 10/00
CARINA E 1.6	4A-FE	04/92 ⇨ 09/97
CARINA E 1.6 16V	4A-FE	12/94 ⇨ 09/97
CARINA E 1.6 GLI	4A-FE	04/92 ⇨ 09/97
CARINA E 1.6 i	4A-FE	02/95 ⇨ 09/97
CARINA E 1.8	7A-FE	04/92 ⇨ 09/97
CARINA E 1.8 i	7A-FE	02/95 ⇨ 09/97

TOYOTA		
CARINA E 1.8 i 16V	7A-FE	01/95 ⇨ 09/97

FACET 4.9880 — 07

IGNITION CABLE SETS

Adatt./Suitable:

BOSCH
0 986 357 259
HITACHI
134132
TOYOTA
90919-22395

[03] **Supplied until depletion**
- Fornibile fino ad esaurimento delle scorte
- Fourni jusqu'à épuisement du stock
- Lieferbar solange vorrat reicht
- Suministrado hasta el stock termina

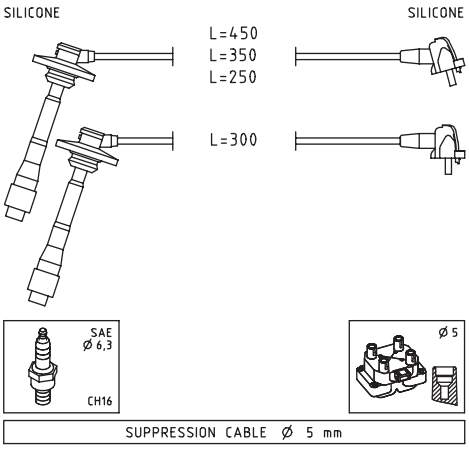

TOYOTA		
COROLLA VIII 1.4	4E-FE	04/97 ⇨ 02/00

FACET 4.9882 — 07,5

IGNITION CABLE SETS

Adatt./Suitable:

BOSCH
0 986 357 272
MITSUBISHI
MD362276

[00] **Eliminated on 19-01-2022. Please verify the availability through our local distributors**
- Eliminato il 19-01-2022. Verificare la disponibilità presso i nostri distributori
- Eliminé le 19-01-2022. Verifier la disponibilité auprès de nos distributeurs sur place
- Am 19-01-2022 gestrichen. Evtl. Verfügbarkeit bitte bei unseren Händlern prüfen
- Eliminado en fecha 19-01-2022. Verificar la disponibilidad a través de nuestros distribuidores locales

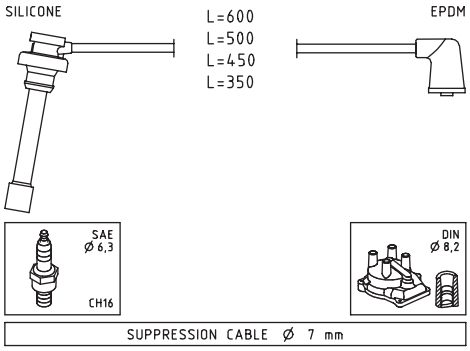

MITSUBISHI		
SPACE STAR 1.3 16V	4G13(16V)	09/00 ⇨ 12/04

FACET 4.9883 — 07

IGNITION CABLE SETS

Adatt./Suitable:

BOSCH
0 986 357 273
HITACHI
134619
MITSUBISHI
MD365102

[03] **Supplied until depletion**
- Fornibile fino ad esaurimento delle scorte
- Fourni jusqu'à épuisement du stock
- Lieferbar solange vorrat reicht
- Suministrado hasta el stock termina

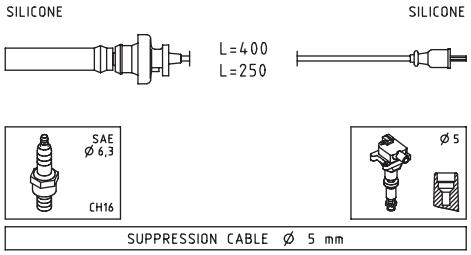

MITSUBISHI		
CARISMA 1.3 16V	4G13(16V)	09/00 ⇨ 10/04
COLT V 1.3	4G19	08/02 ⇨ 09/03
COLT V 1300	4G13(16V)	06/00 ⇨ 09/03
COLT V 1300 GL,GLX	4G13(12V)	05/96 ⇨ 06/00
LANCER VIII 1.3	4G13(16V)	09/03 ⇨ 12/13
LANCER VIII 1.6	4G18	09/03 ⇨ 12/13
SPACE STAR 1.3 16V	4G13(16V)	09/00 ⇨ 12/04
SPACE STAR 1.6 16V	4G18	01/01 ⇨ 12/04

FACET 4.9887 — 07,5

IGNITION CABLE SETS

Adatt./Suitable:

[03] **Supplied until depletion**
- Fornibile fino ad esaurimento delle scorte
- Fourni jusqu'à épuisement du stock
- Lieferbar solange vorrat reicht
- Suministrado hasta el stock termina

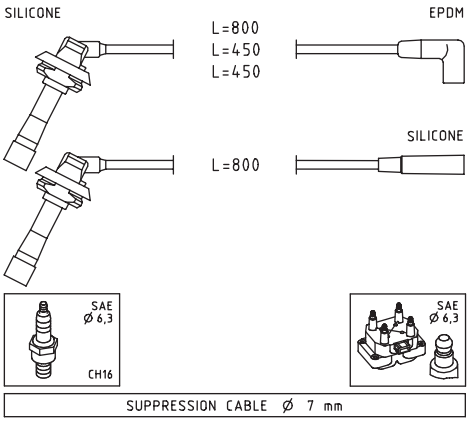

SUBARU		
IMPREZA I 2.0 Turbo GT AWD	EJ205	06/98 ⇨ 12/00
FORESTER I 2.0 S Turbo AWD	EJ20	06/98 ⇨ 04/01

FACET 4.9888 — 07,5

IGNITION CABLE SETS

Adatt./Suitable:

BOSCH
0 986 356 731
HITACHI
134287
ROVER
GHT284
NGC000090

[03] **Supplied until depletion**
- Fornibile fino ad esaurimento delle scorte
- Fourni jusqu'à épuisement du stock
- Lieferbar solange vorrat reicht
- Suministrado hasta el stock termina

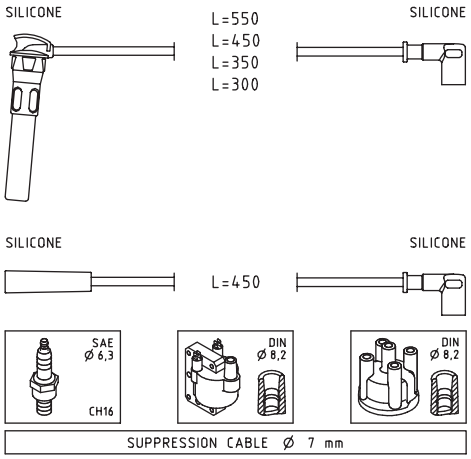

MG		
MGF 1.8 i 16V	18K4F	03/95 ⇨ 03/02
MG TF 115	16K4F	03/02 ⇨ 12/09
MG TF 120	18K4F	03/02 ⇨ 12/09
MG TF 135	18K4F	03/02 ⇨ 12/09
MG ZR 105	14K4F	06/01 ⇨ 04/05
MG ZR 120	18K4F	06/01 ⇨ 04/05
ROVER		
25 1.4 16V	14K4F, 14K4M	10/99 ⇨ 05/05
25 1.6 16V	16K4F	10/99 ⇨ 05/05
25 1.8 16V	18K4F	10/99 ⇨ 05/05
200 II 216	16K4F	01/96 ⇨ 12/97
200 II 216 1.6i 16V	16K4F	01/96 ⇨ 11/99
200 III 214 Si	14K4F	11/95 ⇨ 03/00
200 III 216 Si	16K4F	11/95 ⇨ 06/99
400 II 414 Si	14K4F	05/95 ⇨ 03/00
400 II 416 Si	16K4F, D16Y2	03/95 ⇨ 03/00
400 I 1.6 i	16K4F, D16A8	05/94 ⇨ 11/98
COUPE 1.6 16 V	16K4F	03/96 ⇨ 11/99

FACET 4.9889 — 07

IGNITION CABLE SETS

Adatt./Suitable:

ROVER
NGC000040

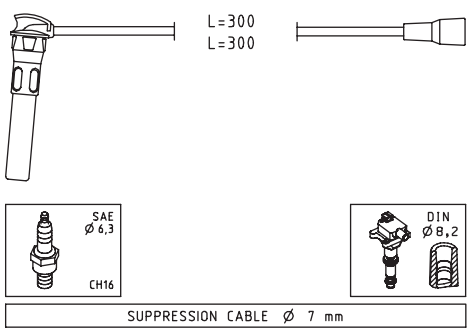

LAND ROVER		
FREELANDER 1.8 16V 4x4	18K4F	04/98 ⇨ 10/06
FREELANDER 1.8 i 16V 4x4	18K4F	02/98 ⇨ 10/06
MG		
MGF 1.8 i 16V	18K4F	03/95 ⇨ 03/02
MG TF 115	16K4F	03/02 ⇨ 12/09
MG TF 120	18K4F	03/02 ⇨ 12/09
MG TF 135	18K4F	03/02 ⇨ 12/09
MG ZR 105	14K4F	06/01 ⇨ 04/05

MG		
MG ZR 120	18K4F	06/01 ⇨ 04/05
MG ZS 120	18K4F	07/01 ⇨ 10/05
ROVER		
25 1.4 16V	14K4F, 14K4M	10/99 ⇨ 05/05
25 1.6 16V	16K4F	10/99 ⇨ 05/05
25 1.8 16V	18K4F	10/99 ⇨ 05/05
45 1.4	14K4F	02/00 ⇨ 05/05
45 1.6	16K4F	02/00 ⇨ 05/05
45 1.8	18K4F	02/00 ⇨ 05/05
75 1.8	K1.8	02/99 ⇨ 05/05
75 1.8 Turbo	--	05/03 ⇨ 05/05
200 III 214 Si	14K4F	11/95 ⇨ 03/00
200 III 216 Si	16K4F	11/95 ⇨ 06/99

FACET 4.9900 — 07,5

IGNITION CABLE SETS

Adatt./Suitable:

[03] **Supplied until depletion**
- Fornibile fino ad esaurimento delle scorte
- Fourni jusqu'à épuisement du stock
- Lieferbar solange vorrat reicht
- Suministrado hasta el stock termina

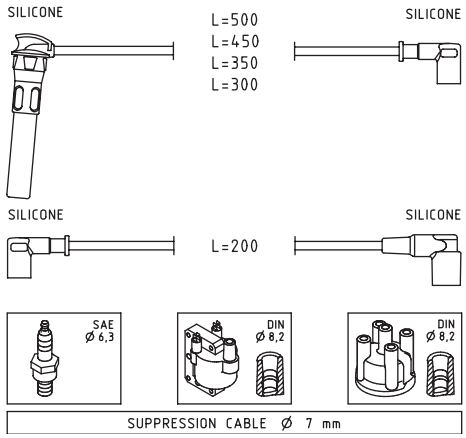

LAND ROVER		
FREELANDER 1.8 16V 4x4	18K4F	04/98 ⇨ 10/06
FREELANDER 1.8 i 16V 4x4	18K4F	02/98 ⇨ 10/06

FACET 4.9904 — 07,5

IGNITION CABLE SETS

Adatt./Suitable:

GENERAL MOTORS
09 117 892
09 117 893
09 117 894
09 117 895
93 176 701

OPEL
12 82 163
12 82 164
12 82 165
12 82 166
16 12 657

[03] **Supplied until depletion**
- Fornibile fino ad esaurimento delle scorte
- Fourni jusqu'à épuisement du stock
- Lieferbar solange vorrat reicht
- Suministrado hasta el stock termina

[180] **with marten protection**
- con protezione contro roditori
- avec protection anti-mustélidés
- mit Marderschutz
- con protección contra martas

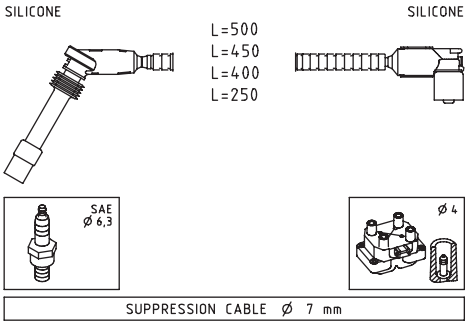

OPEL		
ASTRA G 1.6	X16SZR, Z16SE	09/00 ⇨ 04/05
COMBO B 1.4	C14SE, X14SZ	07/94 ⇨ 10/01
COMBO C 1.6	Z16SE	10/01 ⇨
CORSA B 1.4	C14SE	04/93 ⇨ 08/94
CORSA B 1.4 i	X14SZ	03/93 ⇨ 09/00
CORSA B 1.4 Si	C14SE	03/93 ⇨ 09/00
CORSA C 1.6	Z16SE	09/00 ⇨
MERIVA A 1.6	Z16SE	05/03 ⇨ 05/10
VECTRA B 1.6 i	X16SZR	10/95 ⇨ 07/03
VAUXHALL		
ASTRA IV 1.6	X16SZR, Z16SE	03/98 ⇨ 05/05
ASTRAVAN II 1.6 i	X16SZR, Z16SE	09/00 ⇨ 08/06
COMBO B 1.4	C14SE	07/94 ⇨ 10/01
COMBO C 1.6	Z16SE	09/01 ⇨ 11/11
CORSA B 1.4 i	X14SZ	03/93 ⇨ 09/00
CORSA B 1.4 i S	C14SE	03/93 ⇨ 09/00
MERIVA I 1.6 i	Z16SE	01/03 ⇨ 06/10
VECTRA B 1.6 i	X16SZR	08/95 ⇨ 03/02

FACET 4.9914 — 07

IGNITION CABLE SETS

Adatt./Suitable:

BOSCH
0 986 357 153

ROVER
GHT287
NGC000060

[03] **Supplied until depletion**
- Fornibile fino ad esaurimento delle scorte
- Fourni jusqu'à épuisement du stock
- Lieferbar solange vorrat reicht
- Suministrado hasta el stock termina

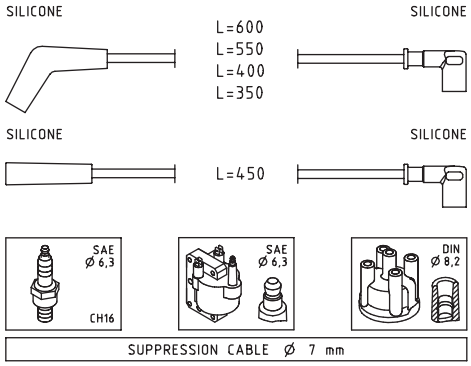

ROVER		
200 III 211	11K2D	01/98 ⇨ 03/00
200 III 214 i	14K2F	11/95 ⇨ 03/00

FACET 4.9921 — 07,5

IGNITION CABLE SETS

Adatt./Suitable:

[00] **Eliminated on 18-11-2019. Please verify the availability through our local distributors**
- Eliminato il 18-11-2019. Verificare la disponibilità presso i nostri distributori
- Eliminé le 18-11-2019. Verifier la disponibilité auprès de nos distributeurs sur place
- Am 18-11-2019 gestrichen. Evtl. Verfügbarkeit bitte bei unseren Händlern prüfen
- Eliminado en fecha 18-11-2019. Verificar la disponibilidad a través de nuestros distribuidores locales

[180] **with marten protection**
- con protezione contro roditori
- avec protection anti-mustélidés
- mit Marderschutz
- con protección contra martas

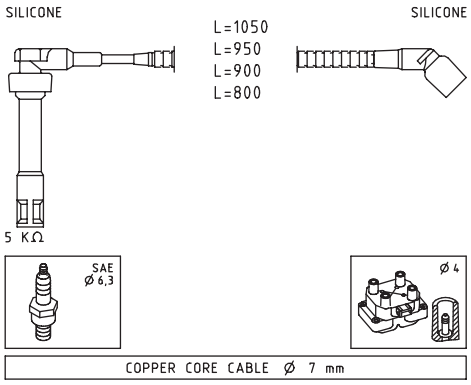

BMW		
3 III 318 is	M42B18(184S1), M44B19(194S1)	01/92 ⇨ 04/99
3 III 318 ti	M42B18(184S1), M44B19(194S1)	09/94 ⇨ 08/99
Z3 1.9 i	M44B19(194S1)	11/95 ⇨ 03/99

FACET 4.9932 — 07

IGNITION CABLE SETS

Adatt./Suitable:

[03] **Supplied until depletion**
- Fornibile fino ad esaurimento delle scorte
- Fourni jusqu'à épuisement du stock
- Lieferbar solange vorrat reicht
- Suministrado hasta el stock termina

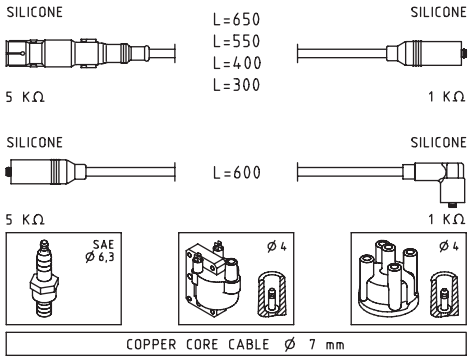

SEAT		
CORDOBA I 1.6 i	AFT	07/96 ⇨ 12/02
IBIZA II 1.6 i	AFT	04/96 ⇨ 02/02
VW		
GOLF IV 1.6	AFT, AKS	06/98 ⇨ 06/02
POLO III 1.6	AFT	05/97 ⇨ 09/01
POLO III 100 1.6	AFT	12/95 ⇨ 09/01
PASSAT III 1.6	AFT	07/94 ⇨ 08/96

FACET 4.9933 — 07

IGNITION CABLE SETS

Adatt./Suitable:

[00] **Eliminated on 13-09-2021. Please verify the availability through our local distributors**
- Eliminato il 13-09-2021. Verificare la disponibilità presso i nostri distributori
- Eliminé le 13-09-2021. Verifier la disponibilité auprès de nos distributeurs sur place
- Am 13-09-2021 gestrichen. Evtl. Verfügbarkeit bitte bei unseren Händlern prüfen
- Eliminado en fecha 13-09-2021. Verificar la disponibilidad a través de nuestros distribuidores locales

[03] **Supplied until depletion**
- Fornibile fino ad esaurimento delle scorte
- Fourni jusqu'à épuisement du stock
- Lieferbar solange vorrat reicht
- Suministrado hasta el stock termina

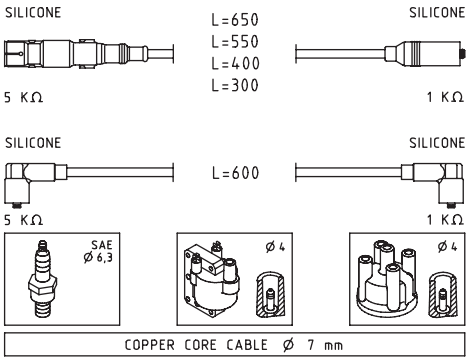

VW		
GOLF III 1.6	AFT	07/94 ⇨ 04/99
POLO III 1.6	AFT	05/97 ⇨ 09/01
POLO III 100 1.6	AFT	12/95 ⇨ 09/01
VENTO 1.6	AFT	10/94 ⇨ 09/98

FACET 4.9937 — 07

IGNITION CABLE SETS

Adatt./Suitable:

[03] **Supplied until depletion**
- Fornibile fino ad esaurimento delle scorte
- Fourni jusqu'à épuisement du stock
- Lieferbar solange vorrat reicht
- Suministrado hasta el stock termina

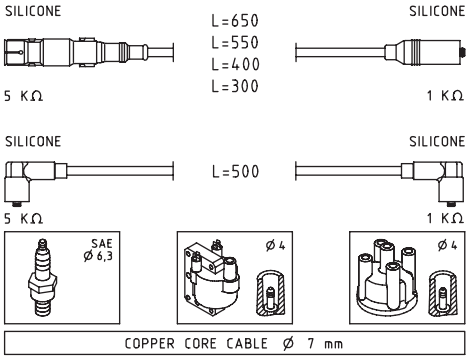

SEAT		
TOLEDO I 1.6 i	AFT	11/96 ⇨ 03/99
VW		
GOLF III 1.6	AFT, AKS	07/94 ⇨ 04/99
VENTO 1.6	AFT, AKS	10/94 ⇨ 02/99

FACET 4.9942 — 07

IGNITION CABLE SETS

Adatt./Suitable:

BOSCH
0 986 356 723
0 986 356 972
DAEWOO
NP1332
GENERAL MOTORS
90 297 423
OPEL
16 12 477

[00] **Eliminated on 14-04-2020. Please verify the availability through our local distributors**
- Eliminato il 14-04-2020. Verificare la disponibilità presso i nostri distributori
- Eliminé le 14-04-2020. Verifier la disponibilité auprès de nos distributeurs sur place
- Am 14-04-2020 gestrichen. Evtl. Verfügbarkeit bitte bei unseren Händlern prüfen
- Eliminado en fecha 14-04-2020. Verificar la disponibilidad a través de nuestros distribuidores locales

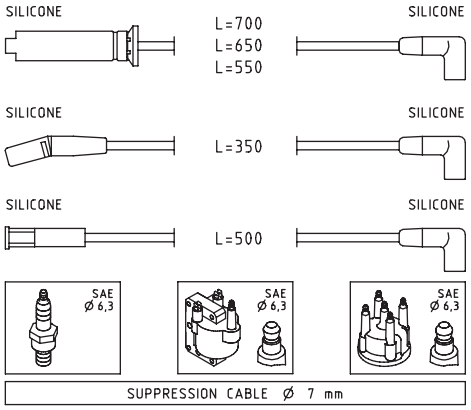

DAEWOO		
NEXIA 1.5	G15MF	02/95 ⇨ 08/97
OPEL		
ASCONA C 1.6 i	E16NZ	09/87 ⇨ 08/88
ASCONA C 1.6 i Cat	C16LZ, C16NZ	09/86 ⇨ 08/88
KADETT E 1.6 i	C16NZ	09/86 ⇨ 07/94
KADETT E 1.6 i Cat	C16LZ, C16NZ	09/86 ⇨ 02/93

FACET 4.9947 — 07

IGNITION CABLE SETS

Adatt./Suitable:

[03] **Supplied until depletion**
- Fornibile fino ad esaurimento delle scorte
- Fourni jusqu'à épuisement du stock
- Lieferbar solange vorrat reicht
- Suministrado hasta el stock termina

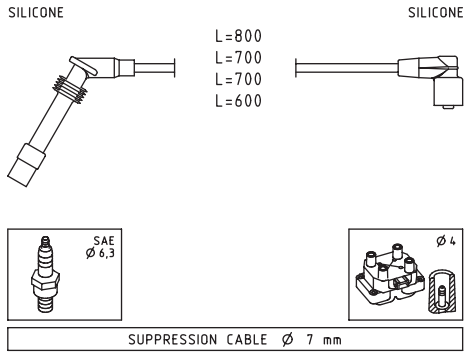

HOLDEN		
FRONTERA_UT 2.0i	X20SE	10/95 ⇨ 03/99
OPEL		
FRONTERA A 2.0 i	X20SE	03/92 ⇨ 10/98
VAUXHALL		
FRONTERA A 2.0	X20SE	04/95 ⇨ 08/98
FRONTERA A 2.0 i	X20SE	03/92 ⇨ 10/98

FACET 4.9976 — 07,5

IGNITION CABLE SETS

Adatt./Suitable:

[00] **Eliminated on 22-02-2021. Please verify the availability through our local distributors**
- Eliminato il 22-02-2021. Verificare la disponibilità presso i nostri distributori
- Eliminé le 22-02-2021. Verifier la disponibilité auprès de nos distributeurs sur place
- Am 22-02-2021 gestrichen. Evtl. Verfügbarkeit bitte bei unseren Händlern prüfen
- Eliminado en fecha 22-02-2021. Verificar la disponibilidad a través de nuestros distribuidores locales

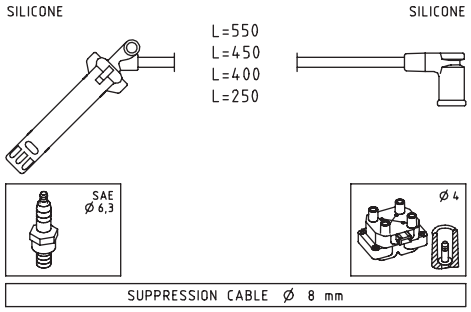

FORD		
GALAXY I 2.3 16V	E5SA, E5SB	09/01 ⇨ 05/06

FACET 4.9984 — 07

IGNITION CABLE SETS

Adatt./Suitable:

[00] **Eliminated on 22-02-2022. Please verify the availability through our local distributors**
- Eliminato il 22-02-2022. Verificare la disponibilità presso i nostri distributori
- Eliminé le 22-02-2022. Verifier la disponibilité auprès de nos distributeurs sur place
- Am 22-02-2022 gestrichen. Evtl. Verfügbarkeit bitte bei unseren Händlern prüfen
- Eliminado en fecha 22-02-2022. Verificar la disponibilidad a través de nuestros distribuidores locales

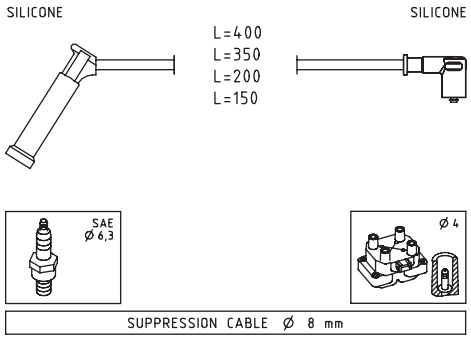

FACET 4.9990 07,5

IGNITION CABLE SETS

Adatt./Suitable:

00 **Eliminated on 22-02-2022. Please verify the availability through our local distributors**

- Eliminato il 22-02-2022. Verificare la disponibilità presso i nostri distributori
- Eliminé le 22-02-2022. Verifier la disponibilité auprès de nos distributeurs sur place
- Am 22-02-2022 gestrichen. Evtl. Verfügbarkeit bitte bei unseren Händlern prüfen
- Eliminado en fecha 22-02-2022. Verificar la disponibilidad a través de nuestros distribuidores locales

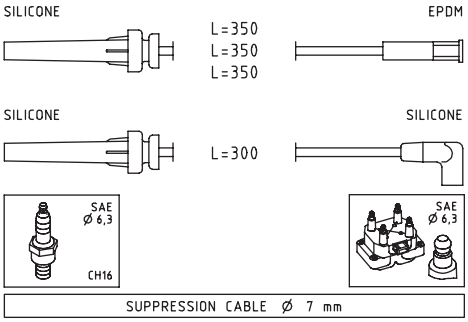

CHRYSLER		
PT CRUISER 2.4 GT	EDV	03/04 ⇨ 03/08
PT CRUISER GT 2.4	EDV	08/03 ⇨ 12/10

PICK-UPS

•IMPULSORI •CAPTEURS •IMPULSGEBER •CAPTADORES

(A) P/NRS. - NOTES

- CODICI - NOTE
- RÉFS. - NOTES
- ARTIKEL-NR. - ANMERKUNGEN
- CODIGOS - NOTAS

8.4961/1 — 3,5

PICK-UPS

Adatt./Suitable: ***MARELLI***

ABARTH
9939762

FIAT
9934729
9939762

LANCIA
9934729

MAGNETI MARELLI
071319801010
610 800 24 *N
712 160 01
713 198 01

*N **Available only pick-up coil, not the distributor assy**

- Fornito solo l'impulsore, non lo spinterogeno completo
- Disponible seulement capteur, sans allumeur
- Erhältlich nur Impulsgeber, ohne Zündverteiler
- Disponible solamente captador sin didtribuidor

(B) PICTURE + TECHNICAL INFO

- FOTO + INFORMAZIONE TECNICA
- ILLUSTRATION + INFORMATION TÉCHNIQUE
- BILD + TECHNISCHE INFO
- FOTO + INFORMACIÓN TÉCNICA

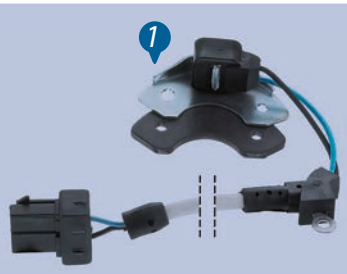

L	ohm	Pick-Up	
700	730	Coil	

(C) APPLICATION LIST

- GUIDA APPLICAZIONI
- LISTE D'APPLICATIONS
- ANWENDUNGSTABELLE
- LISTA DE APLICACIONES

ABARTH		
RITMO 125 TC 2.0	138AR1.000	11/81 ⇨ 12/87
FIAT		
132 2.0	132C2.000	01/76 ⇨ 06/81
RITMO II 105 1.6	138AR.000	01/83 ⇨ 12/87
LANCIA		
A 112 1.0 Abarth	A112A2.000, A112A2.000	03/78 ⇨ 02/84

(A)

1. **# FACET**
2. **OEM P/NRS.**
   ·CODICI ORIGINALI
   ·RÉFS. D'ORIGINE
   ·ORIGINALTEILE-NR.
   ·CODIGOS ORIGINALES
3. **PACKAGING SIZE**
   ·FORMATO CONFEZIONE
   ·FORMAT DU CONDITIONNEMENT
   ·ABPACKENSGROESSE
   ·TAMAÑO DEL ENVASE
4. **NOTE**
   ·NOTE
   ·NOTES
   ·BEMERKUNGEN
   ·NOTAS

(B)

1. **PICTURE**
   ·FOTO
   ·PHOTO
   ·BILD
   ·FOTO
2. **CABLE LENGHT IN "mm" MEASURED AS SHOWN:**
   ·LUNGHEZZA IN "mm" DEL CAVO COSÌ MISURATO:
   ·LONGUEUR EN "mm" DU CABLE MESURÉ COMME SUIT:
   ·KABELLÄNGE IN "mm" GEMESSEN WIE GEZEIGT:
   ·LARGO EN "mm" DEL CABLE MEDIDO DE LA MANERA ILUSTRADA:

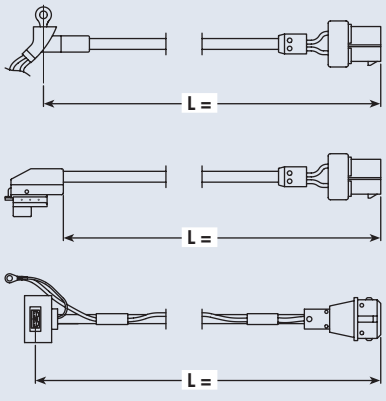

3. **RESISTANCE BETWEEN THE TERMINALS**
   ·RESISTENZA TRA I TERMINALI
   ·RESISTANCE ENTRE LES CONNEXIONS
   ·WIDERSTAND ZWISCHEN DEN ANSCLÜSSEN
   ·RESISTENCIA ENTRE LOS ENCHUFES
4. **PICK-UP COIL**
   ·IMPULSORE
   ·CAPTEUR
   ·IMPULSGEBER
   ·CAPTADOR

   HALL PICK-UP COIL
   ·IMPULSORE SISTEMA HALL
   ·CAPTEUR DU SYSTEME HALL
   ·HALL-IMPULSGEBER
   ·CAPTADOR DEL SISTEMA HALL
5. **TYPE OF CONNECTION**
   ·TIPO DI CONNESSIONE
   ·TYPE DE CONNEXION
   ·ANSCHLUSSART
   ·TIPO DE ENCHUFE

marketing@facet.it

FACET 8.2653 — 3

PICK-UPS

Adatt./Suitable: ***BOSCH***

ALFA ROMEO
705 420
9938953
9950055

BOSCH
0 237 002 109 *N
1 234 211 018
1 234 211 218
1 237 031 123 *S

FIAT
7073905 *S
7080461
9938953

FORD
3 241 724
3 243 330
6 147 957 *S
84AU-12A09-3A

PEUGEOT
5904 06
5905 09

TALBOT
0013 56 6600

VOLVO
1276620

VW
035 905 205
035 905 205 A *N
035 905 205 B *N
035 905 205 C *N
035 905 205 D *N
035 905 205 E *N
035 905 205 Q *N
035 905 315
047 905 205 C *N
325 905 209 2
477 905 206

[00] **Eliminated on 27-01-2021. Please verify the availability through our local distributors**
- Eliminato il 27-01-2021. Verificare la disponibilità presso i nostri distributori
- Eliminé le 27-01-2021. Verifier la disponibilité auprès de nos distributeurs sur place
- Am 27-01-2021 gestrichen. Evtl. Verfügbarkeit bitte bei unseren Händlern prüfen
- Eliminado en fecha 27-01-2021. Verificar la disponibilidad a través de nuestros distribuidores locales

*N **Available pick-up coil only-not the distributor assy**
- Fornito solo impulsore, no lo spinterogeno completo
- Disponible seulement capteur, sans l'allumeur
- Erhältlich nur impulsgeber, ohne Zündverteiler
- Disponible solamente captador sin distribuidor

*S **Available pick-up coil only-not base**
- Fornito solo impulsore, no base
- Disponible seulement capteur, sans base
- Erhältlich nur Impulsgeber, ohne Grundplatte
- Disponible solamente captador, sin base

L	ohm	Pick-Up
---	**1.100**	**Coil**

ALFA ROMEO		
33 I 1.3	AR30168	10/84 ⇨ 12/89
33 I 1.3 i.e.	AR30168	05/83 ⇨ 12/89
33 I 1.5 4x4	AR30508	12/86 ⇨ 03/89
75 1.6	AR06100	05/85 ⇨ 09/89
75 1.8	AR06202	09/85 ⇨ 06/89
90 1.8	AR06202	10/84 ⇨ 07/87
90 2.0 i.e.	AR06210	10/84 ⇨ 07/87
ALFASUD 1.5 ti	AR30128	05/80 ⇨ 06/84
ALFETTA 1.6	AR01600	01/75 ⇨ 12/84
ALFETTA 1.8	AR01608	10/79 ⇨ 12/84
GIULIETTA I 1.6	AR01600	10/77 ⇨ 04/85
GIULIETTA I 1.8	AR01678	04/79 ⇨ 04/85
GIULIETTA I 2.0	AR01655	06/80 ⇨ 04/85
SPIDER I 1600	AR00526, AR01563	03/76 ⇨ 12/93
FIAT		
UNO 70 1.3i SX	--	01/83 ⇨ 12/89
UNO 75 i.e. 1.5	138C2.048	10/85 ⇨ 12/93
FIAT (BR)		
PREMIO 1.3	--	01/85 ⇨
PREMIO 1.5	--	01/85 ⇨
UNO 1.5	1.5	01/91 ⇨ 12/93
UNO 1.5R	1.5	01/87 ⇨ 12/89
UNO 1.6R	1.6	01/90 ⇨ 12/93
UNO CS 1.5	1.5	01/89 ⇨ 12/93
UNO CS 1.5 Furgoneta	1.5	01/91 ⇨ 12/93
UNO CSL 1.6	1.6	01/91 ⇨ 12/93
UNO MILLE 1.0	1.0	01/91 ⇨ 04/93
PEUGEOT		
309 I 1.3	G1A, G2S	10/85 ⇨ 08/89
505 2.0 TI, STI	829(ZEJ)	08/79 ⇨ 10/86
TALBOT		
TAGORA 2.1	5N2	06/80 ⇨ 12/83
VOLVO		
240 2.0	B19ET	10/82 ⇨ 08/84
240 2.1 Turbo	B21ET, B21FT	08/80 ⇨ 07/85

FACET 8.2659 — 3,5

PICK-UPS

Adatt./Suitable: ***BOSCH***

BOSCH
0 237 024 038 *N
0 237 035 001 *N
1 237 011 073

PEUGEOT
5904 25

SEAT
050 905 205 A *N
051 905 205 *N

VW
026 905 205 AA *N
026 905 205 AB *N
026 905 205 AC *N
026 905 205 AD *N
026 905 205 AF *N
026 905 205 AG *N
026 905 205 AH *N
026 905 205 AJ *N
026 905 205 AK *N
026 905 205 G *N
026 905 205 H *N
026 905 205 J *N
026 905 205 L *N
026 905 205 N *N
026 905 205 P *N
026 905 205 Q *N
026 905 206
026 905 206 A *N
026 905 206 AC *N
026 905 206 AD *N
026 905 206 B *N
026 905 206 C *N
026 905 206 E *N
026 905 206 F *N
026 905 206 G *N
026 905 206 H *N
026 905 206 J *N
026 905 206 K *N
026 905 206 T *N
027 905 205 F *N
027 905 205 H *N
027 905 205 M *N
027 905 205 Q *N
027 905 205 R *N
049 905 206 D *N
049 905 206 F *N
049 905 206 G *N
050 905 205
050 905 205 A *N
050 905 205 B *N
050 905 205 C *N
050 905 205 D *N
050 905 205 E *N
050 905 205 F *N
050 905 205 H *N
050 905 205 J *N
050 905 205 K *N
051 905 205 *N
056 905 205 L
175 905 206 A *N

*N **Available pick-up coil only-not the distributor assy**
- Fornito solo impulsore, no lo spinterogeno completo
- Disponible seulement capteur, sans l'allumeur
- Erhältlich nur impulsgeber, ohne Zündverteiler
- Disponible solamente captador sin distribuidor

L	ohm	Pick-Up	
---	---	**Hall**	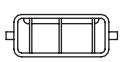

PEUGEOT		
505 2.1 i	XN9T	01/83 ⇨ 12/88
505 2.2	851(ZDJ), 851X(ZDJL)	05/81 ⇨ 12/93
505 2.2 GTI	851B(ZDJL)	08/83 ⇨ 12/93
SEAT		
TOLEDO I 1.6 i	1F	05/91 ⇨ 03/99
TOLEDO I 1.8 i	RP	05/91 ⇨ 12/96
VW		
JETTA II 1.6	PN	10/86 ⇨ 10/91
GOLF II 1.6	PN	10/86 ⇨ 12/92
GOLF II 1.6 G	PN	08/86 ⇨ 07/91
GOLF II 1.8 [CHE] [SWE]	HV	04/84 ⇨ 07/86

FACET 8.2660 — 3,5

PICK-UPS

Adatt./Suitable: ***BOSCH***

BOSCH
1 230 500 221
9 231 087 552

VW
040 905 359 1

[03] **Supplied until depletion**
- Fornibile fino ad esaurimento delle scorte
- Fourni jusqu'à épuisement du stock
- Lieferbar solange vorrat reicht
- Suministrado hasta el stock termina

L	ohm	Pick-Up	
---	---	**Hall**	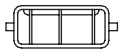

VOLKSWAGEN (BR)		
GOL 1.6	504, 505	09/94 ⇨ 01/97
GOL 1.8	521, 522	04/94 ⇨ 01/97
GOL 2.0i	528, 529	09/94 ⇨ 01/97
LOGUS 1.6	504, 505	10/94 ⇨ 12/96
LOGUS 1.8	524, 525, 599	12/92 ⇨ 12/96
LOGUS 2.0	653	11/93 ⇨ 05/94
LOGUS 2.0i	526, 527	05/94 ⇨ 12/96
PARATI 1.6	504, 505	08/95 ⇨ 01/97
PARATI 1.8	521, 522	08/95 ⇨ 01/97
PARATI 2.0i	528, 529	08/95 ⇨ 01/97
POINTER 1.8	524, 525, 599	11/93 ⇨ 12/96
POINTER 2.0	653	12/92 ⇨ 05/94
POINTER 2.0i	526, 527	05/94 ⇨ 12/96

FACET 8.2693 — 3,5

PICK-UPS

Adatt./Suitable: ***BOSCH***

BOSCH
0 237 037 010 *N
1 237 011 076
1 237 011 111

SAAB
74 86 822

SEAT
030 998 065
SE 021914.016A

VW
030 905 205 *N
030 905 205 A *N
030 905 205 B *N
030 905 205 D *N
030 905 205 J *N
030 998 065

***N Available pick-up coil only-not the distributor assy**

- Fornito solo impulsore, no lo spinterogeno completo
- Disponible seulement capteur, sans l'allumeur
- Erhältlich nur impulsgeber, ohne Zündverteiler
- Disponible solamente captador sin distribuidor

L	ohm	Pick-Up	
---	---	**Hall**	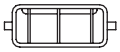

SAAB		
900 I 2.0 c	B201XC	09/79 ⇨ 12/88
900 I 2.0 i	0TLE4G15, B201XI	11/80 ⇨ 08/90
900 I 2.0 Turbo	B201XL	01/86 ⇨ 12/91
SEAT		
IBIZA I 1.2	021A1000	11/84 ⇨ 12/93
MALAGA 1.2	021A1000	05/85 ⇨ 12/93
MALAGA 1.5	021A2000	05/85 ⇨ 12/93
VW		
POLO II 1.0	AAK, HZ	01/85 ⇨ 09/94
POLO II 1.0 Cat	AAK	08/89 ⇨ 09/94
POLO II 1.3	MH	08/83 ⇨ 07/88
POLO II 1.3 Cat	2G, MH, NZ	07/87 ⇨ 09/94
JETTA II 1.0	HZ	08/85 ⇨ 10/91
JETTA II 1.3	MH, NU	01/84 ⇨ 12/87
JETTA II 1.3 Cat	2G, MH, NZ	06/87 ⇨ 12/91
DERBY 1.3	HK	08/83 ⇨ 12/84
GOLF II 1.0	HZ	08/85 ⇨ 10/91
GOLF II 1.3	MH, NU	08/83 ⇨ 12/87
GOLF II 1.3 Cat	2G, NZ	06/86 ⇨ 12/92

FACET 8.2719 — 3,5

PICK-UPS

Adatt./Suitable: ***BOSCH***

AUDI
034 998 065

BOSCH
1 237 011 081
1 237 011 116

VW
034 998 065
035 998 065 A

L	ohm	Pick-Up	
---	---	**Hall**	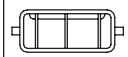

AUDI		
80 II 1.3	EP	09/78 ⇨ 07/86
80 II 1.6	DT, JU, SA, WV	08/78 ⇨ 03/87
80 II 1.8	DS, JN, SF	01/83 ⇨ 08/86
80 II 1.8 CC quattro	JN, JV	08/84 ⇨ 08/86
80 II 1.8 GTE	DZ, MU	06/84 ⇨ 03/87
80 II 2.0	JS	10/83 ⇨ 09/84
80 II 2.0 quattro	JS	10/83 ⇨ 09/84
80 III 1.4	SE	08/86 ⇨ 07/88
80 III 1.6	ABB, PP, RN, RNA	09/86 ⇨ 10/91
80 III 1.8	RU	10/86 ⇨ 01/90
80 III 1.8 E	DZ	06/86 ⇨ 08/91
80 III 1.8 S	JN, JV, NE, PM, SF	08/86 ⇨ 10/91
90 I 1.8	JN	06/84 ⇨ 03/87
90 I 2.0	JL, JS	10/84 ⇨ 03/87
90 I 2.0 quattro	JS	08/84 ⇨ 08/86
90 I 2.2	9C54, KX	10/84 ⇨ 03/87
90 I 2.2 E quattro	9C54	11/84 ⇨ 03/87
90 II 2.0	PS	07/88 ⇨ 09/91
90 II 2.2 E	9C54	04/87 ⇨ 07/91
90 II 2.2 E quattro	9C54	04/87 ⇨ 09/91
100 III 1.8	DS, JW, NP, SH	08/83 ⇨ 12/90
100 III 1.8 Cat	4B, PH	03/85 ⇨ 11/90
100 III 1.8 Cat quattro	4B	08/85 ⇨ 11/90
100 III 1.8 quattro	NP, SH	10/84 ⇨ 07/90
100 III 2.0 Cat	RT	01/88 ⇨ 11/90
100 III 2.0 E Cat	RT	01/88 ⇨ 11/90
COUPE 1.8	DZ	08/89 ⇨ 07/91
COUPE 2.2	9C54	11/88 ⇨ 07/91
COUPE 2.2 quattro	9C54	11/88 ⇨ 07/91
COUPE 2.3 quattro	NG	01/87 ⇨ 12/87
VW		
PASSAT II 2.0	JS	08/83 ⇨ 03/88
PASSAT II 2.0 Syncro	JS	05/84 ⇨ 03/88
JETTA II 1.6	ABN, EZ, EZA, HM, PN, RF	12/83 ⇨ 07/92
JETTA II 1.8	EV, GU, GX, RH	01/84 ⇨ 10/91
JETTA II 1.8 Cat	GX, RP	08/87 ⇨ 10/91
JETTA II 1.8 Syncro	GU, RP	08/87 ⇨ 12/88
JETTA II 1.8i GT	GZ	12/83 ⇨ 07/88
CADDY I 1.8	JH	08/85 ⇨ 07/92
GOLF I 1.6	EW, HN	08/83 ⇨ 04/92
GOLF I 1.8	DX, EX, JH, KT	08/82 ⇨ 04/93
GOLF II 1.6	ABN, EZ, PN, RF	08/83 ⇨ 12/92
GOLF II 1.6 [CHE] [SWE]	HM	08/83 ⇨ 07/88
GOLF II 1.6 G	EZA, PN	08/86 ⇨ 07/91
GOLF II 1.8	GU, GX, RH	08/84 ⇨ 10/91
GOLF II 1.8 [CHE] [SWE]	HV	08/86 ⇨ 07/87
GOLF II 1.8 GTI	EV	08/83 ⇨ 10/91
GOLF II 1.8 i	RP	08/87 ⇨ 07/91
GOLF II 1.8 i Cat	GX, RP	08/87 ⇨ 10/91
GOLF II 1.8 i Cat Syncro	RP	08/87 ⇨ 10/91
VW		
GOLF II 1.8 Syncro	GU, GX	02/86 ⇨ 07/91
GOLF II 1.8i GTI [CHE] [SWE]	GZ	01/84 ⇨ 07/87
GOLF II 1.8i GTI [SWE]	GZ	08/87 ⇨ 07/88
PASSAT III 1.6	1F, EZ	04/88 ⇨ 07/92
PASSAT III 1.8	RP	02/88 ⇨ 05/97
QUANTUM 1.7	--	01/85 ⇨ 12/87
SANTANA 2.0	JS	08/83 ⇨ 12/84
SCIROCCO II 1.6	EW, EWA, HN, RE	01/83 ⇨ 07/90
SCIROCCO II 1.8	DX, EX, JH, KT	08/82 ⇨ 07/92

FACET 8.2722 — 1

PICK-UPS

Adatt./Suitable: ***BOSCH***

VOLVO
1346792
13467923

L	ohm	Pick-Up
---	---	**Hall**

VOLVO		
740 2.0	B200E, B200G, B200K	08/85 ⇨ 07/92
740 2.3	B230E, B230F, B230K	08/84 ⇨ 12/92
740 2.3 GL	B230E	08/84 ⇨ 08/87
740 2.3 Turbo	B230FT	08/86 ⇨ 08/91
760 2.3	B230FT, B230K	08/84 ⇨ 07/92
760 2.3 Turbo	B230FT	08/84 ⇨ 08/90
940 I 2.0	B200E	09/90 ⇨ 09/93
940 I 2.3	B230E	08/90 ⇨ 12/94

FACET 8.2723 — 3,5

PICK-UPS

Adatt./Suitable: ***BOSCH***

AUDI
030 905 065
030 905 065 B

BOSCH
0 237 522 011 *N
1 237 010 027
1 237 010 039
1 237 011 122
1 237 011 124
1 237 031 296

SEAT
030 905 065
030 905 065 B
037 905 205 M *N
050 905 205 AH*N

SKODA
030 905 065

VW
030 905 065
030 905 065 A
030 905 065 B
035 905 206 AF *N
037 905 205 M *N
050 905 205 AH*N
050 905 205 AL *N
050 905 205 BA *N
052 998 065

*N **Available pick-up coil only-not the distributor assy**
- Fornito solo impulsore, no lo spinterogeno completo
- Disponible seulement capteur, sans l'allumeur
- Erhältlich nur impulsgeber, ohne Zündverteiler
- Disponible solamente captador sin distribuidor

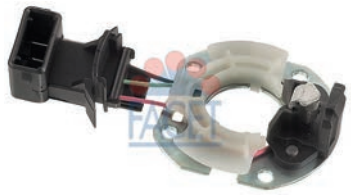

L	ohm	Pick-Up	
---	---	Hall	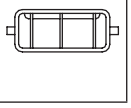

AUDI		
80 IV 1.6 E	ADA	06/93 ⇨ 01/96
A4 I 1.6	ADP	11/94 ⇨ 09/01
SEAT		
AROSA 1.0	AER, ALL	05/97 ⇨ 06/04
AROSA 1.4	AEX, AKV, APQ	05/97 ⇨ 06/04
CORDOBA I 1.0 i	AER	09/96 ⇨ 10/02
CORDOBA I 1.4	ANX	12/97 ⇨ 04/99
CORDOBA I 1.4 i	AEX, AKV, APQ	06/94 ⇨ 12/02
CORDOBA I 1.4 i 16V	AFH	09/96 ⇨ 10/02
CORDOBA I 1.6 i	1F, AEE, AFT, ALM	02/93 ⇨ 06/99
CORDOBA I 1.8 i	ABS, ACC, ADZ	02/93 ⇨ 09/02
CORDOBA I 1.8 i 16V	148D	10/93 ⇨ 08/96
CORDOBA I 2.0 i	AGG	02/93 ⇨ 06/99
IBIZA II 1.0 i	AER	09/96 ⇨ 02/02
IBIZA II 1.4	ANX	12/97 ⇨ 04/99
IBIZA II 1.4 i	ABD, AEX, AKV, APQ	09/93 ⇨ 02/02
IBIZA II 1.4 i 16V	AFH	06/97 ⇨ 02/02
IBIZA II 1.6 i	1F, AEE, AFT, ALM	03/93 ⇨ 06/99
IBIZA II 1.8 i	ABS, ADZ	03/93 ⇨ 08/99
IBIZA II 1.8 i 16V	148D	11/93 ⇨ 08/96
IBIZA II 2.0 i	AGG	03/93 ⇨ 08/99
INCA 1.4 i	AEX, AKV, APQ	11/95 ⇨ 06/03
INCA 1.6 i	1F, AEE	11/95 ⇨ 05/98
ALHAMBRA I / II 2.0 i	ADY	04/96 ⇨ 03/10
TOLEDO I 1.6 i	1F, AFT	05/91 ⇨ 03/99
TOLEDO I 1.8 i	ABS, RP	05/91 ⇨ 12/96
TOLEDO I 2.0 i	AGG	05/91 ⇨ 03/99
TOLEDO I 2.0 i 16V	ABF	11/93 ⇨ 03/99
SKODA		
FELICIA 1.6	6A16XHT	06/97 ⇨ 04/02
FELICIA 1.6 GLX	6A16XHT	08/95 ⇨ 03/98
FELICIA 1.6 LX	6A16XHT	08/95 ⇨ 03/98
OCTAVIA I 1.6	6A16XHT	09/96 ⇨ 09/04
VW		
PASSAT IV 1.6	ADP	10/96 ⇨ 11/00
POLO II 1.0	AAU	01/85 ⇨ 09/94
POLO II 1.0 Cat	AAU	08/89 ⇨ 09/94
POLO II 1.3	AAV	09/82 ⇨ 07/94
POLO II 1.3 Cat	AAV	07/87 ⇨ 09/94
JETTA II 1.8 16V	KR, PL	08/86 ⇨ 10/91
CADDY II 1.4	AEX, AKV, APQ	11/95 ⇨ 06/03
CADDY II 1.6	1F, AEE	11/95 ⇨ 12/00
CADDY II 60 1.4	AEX, APQ	11/95 ⇨ 01/04
CADDY II 75 1.6	1F, AEE	11/95 ⇨ 05/97
VW		
CADDY III 1.8 [ARG]	BUR	10/05 ⇨
CORRADO 1.8 16V	KR	04/89 ⇨ 07/92
CORRADO 2.0 i 16V	7TZ220XS560	08/91 ⇨ 12/95
DERBY 1.3	GK	09/82 ⇨ 12/84
GOLF II 1.8 GTI 16V	KR, PL	02/86 ⇨ 10/91
GOLF III 1.4	ABD, AEX	10/91 ⇨ 04/99
GOLF III 1.6	ABU, AEA, AEE, AEK, AFT, AKS	09/92 ⇨ 04/99
GOLF III 1.8	AAM, ABS, ADZ	08/91 ⇨ 04/99
GOLF III 2.0	ADY, AEP, AGG, AKR	11/91 ⇨ 04/99
GOLF III 2.0 GL	AEP	08/95 ⇨ 09/97
GOLF III 2.0 GTI 16V	ABF	08/92 ⇨ 08/97
GOLF III 2.0 Syncro	AGG	08/95 ⇨ 04/99
GOLF IV 1.6	AFT, AKS	06/98 ⇨ 06/02
GOLF IV 2.0	AGG, AKR, AWF, AWG	06/98 ⇨ 06/02
LUPO 1.0	AER, ALL	09/98 ⇨ 07/05
POLO III 1.4	AEX, AKV, ANX, APQ	05/97 ⇨ 09/01
POLO III 1.6	AEA, AEE, AFT, ALM	09/94 ⇨ 09/01
POLO III 100 1.4 16V	AFH	04/96 ⇨ 10/99
POLO III 100 1.6	AFT	12/95 ⇨ 09/01
POLO III 45 1.0	AEV	10/94 ⇨ 09/96
POLO III 50 1.0	AER, ALL	09/96 ⇨ 10/99
POLO III 54 1.4	ANX	01/98 ⇨ 08/99
POLO III 55 1.3	ADX	10/94 ⇨ 04/97
POLO III 55 1.4	AEX	08/95 ⇨ 10/99
POLO III 60 1.4	AEX, AKV, APQ	07/95 ⇨ 09/01
POLO III 75 1.6	AEA, AEE, AHS, ALM	10/94 ⇨ 09/01
POLO III 75 1.6 4motion	AEA	08/95 ⇨ 10/99
PASSAT III 1.8	KR	08/91 ⇨ 09/93
PASSAT III 1.8 16V	KR	04/88 ⇨ 12/89
PASSAT III 1.8 GL	KR	08/91 ⇨ 09/93
POLO IV 1.0	AER	08/96 ⇨ 12/01
SCIROCCO II 1.8 16V	KR, PL	10/85 ⇨ 07/92
TRANSPORTER IV 2.5	ACU, AET, AEU, APL, AVT	11/90 ⇨ 04/03
TRANSPORTER IV 2.5 Syncro	ACU, AET, AEU, APL, AVT	08/92 ⇨ 04/03
VENTO 1.4	ABD	11/91 ⇨ 09/98
VENTO 1.6	AEA, AEK, AFT, AKS	09/92 ⇨ 02/99

FACET 8.2731 — 3,5

PICK-UPS

Adatt./Suitable: ***BOSCH***

VW
035 998 065 A*
035 998 065 A***

L	ohm	Pick-Up	
---	---	Hall	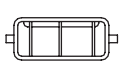

AUDI		
80 II 1.6	WV	08/78 ⇨ 07/86
80 III 1.8 quattro	SD	09/86 ⇨ 08/90
80 III 1.8 S quattro	JN	09/86 ⇨ 09/91
VW		
SANTANA 1.6	DT	08/81 ⇨ 12/84
SANTANA 1.8	DS	01/83 ⇨ 12/84

FACET 8.2733 — 3,5

PICK-UPS

Adatt./Suitable: ***BOSCH***

ALFA ROMEO
60534261 *S

BOSCH
0 237 521 047 *N
1 237 010 033
1 237 011 114
1 237 031 180

FORD
6 125 612 *S
6 182 576 *N
6 182 577 *N
84SF-12100-BA *N
89SF-12100-JA *N

Motorcraft
EDR 309 *S

SEAT
026 905 359 2
051 905 205 C *N

VW
026 905 359 2
030 998 065 A *S
051 905 205 B *N
051 905 205 C *N

*N **Available pick-up coil only-not the distributor assy**
- Fornito solo impulsore, no lo spinterogeno completo
- Disponible seulement capteur, sans l'allumeur
- Erhältlich nur impulsgeber, ohne Zündverteiler
- Disponible solamente captador sin distribuidor

*S **Available pick-up coil only-not base**
- Fornito solo impulsore, no base
- Disponible seulement capteur, sans base
- Erhältlich nur Impulsgeber, ohne Grundplatte
- Disponible solamente captador, sin base

L	ohm	Pick-Up	
---	---	Hall	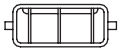

FORD		
ESCORT IV 1.6 Turbo RS	LNB	01/86 ⇨ 07/90
SEAT		
CORDOBA I 1.0 16V	AST, AVZ	05/00 ⇨ 10/02
IBIZA II 1.0 16V	AST, AVZ	10/99 ⇨ 02/02
TOLEDO I 1.8 16V	KR, PL	05/91 ⇨ 03/99
TOLEDO I 1.8 GT	KR	05/91 ⇨ 11/92
VOLKSWAGEN (BR)		
CADDY 1.6i	MY4	11/98 ⇨
GOL 1.0i	510	11/96 ⇨
GOL 1.0i 16v	511	09/97 ⇨
GOL 1.6i	540, 541	10/96 ⇨
GOL 1.8i	542, 543	10/96 ⇨
GOL 2.0i	546, 547	10/96 ⇨
PARATI 1.0i 16v	511	09/97 ⇨
PARATI 1.6i	540, 541	10/96 ⇨
PARATI 1.8i	542	10/96 ⇨
PARATI 2.0i	546, 547	10/96 ⇨
POLO 1.6	MJ3, MY4	07/00 ⇨
POLO 1.8	MJ2, MY5, MY6	12/96 ⇨
SAVEIRO 1.6i	540, 541	10/96 ⇨
SAVEIRO 1.8i	542, 543	10/96 ⇨
SAVEIRO 2.0i	546, 547	10/96 ⇨
VW		
CADDY III 1.6 [ARG]	UVC	10/05 ⇨
POLO II 1.3	3F	10/90 ⇨ 09/94
POLO II 1.3 Cat	3F	10/89 ⇨ 09/94
POLO II 1.3 G40	PY	01/87 ⇨ 09/94

FACET 8.2734 — 3,5

PICK-UPS

Adatt./Suitable: ***BOSCH***

BOSCH
0 237 021 074 *N
1 237 011 119

SEAT
030 998 065 B

VW
030 998 065 B

*N **Available pick-up coil only-not the distributor assy**
- Fornito solo impulsore, no lo spinterogeno completo
- Disponible seulement capteur, sans l'allumeur
- Erhältlich nur impulsgeber, ohne Zündverteiler
- Disponible solamente captador sin distribuidor

L	ohm	Pick-Up	
---	---	**Hall**	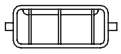

SEAT		
IBIZA II 1.3 i	8C20HD0D	03/93 ⇨ 08/99
VW		
POLO II 1.0	HZ	01/85 ⇨ 09/94
POLO II 1.0 Cat	ACM	08/89 ⇨ 09/94
POLO II 1.3 Cat	2G	07/87 ⇨ 09/94
JETTA II 1.0	HZ	08/85 ⇨ 10/91
JETTA II 1.3 Cat	2G, NZ	06/87 ⇨ 12/91
GOLF II 1.0	HZ	08/85 ⇨ 10/91
GOLF II 1.3 Cat	2G, NZ	06/86 ⇨ 12/92

FACET 8.2744 — 3,5

PICK-UPS

Adatt./Suitable: ***BOSCH***

BOSCH
0 237 520 054 *N
0 237 521 024
1 237 031 093
1 237 031 339

HYUNDAI
27180-22000

SAAB
88 57 617 *N

*N **Available pick-up coil only-not the distributor assy**
- Fornito solo impulsore, no lo spinterogeno completo
- Disponible seulement capteur, sans l'allumeur
- Erhältlich nur impulsgeber, ohne Zündverteiler
- Disponible solamente captador sin distribuidor

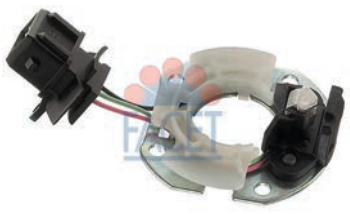

L	ohm	Pick-Up	
---	---	**Hall**	

HYUNDAI		
S COUPE 1.5 i	G4EK	04/92 ⇨ 05/96
S COUPE 1.5 i Turbo	G4EK-TC	04/91 ⇨ 05/96
SAAB		
900 I 2.0 S Turbo-16	B202S	07/91 ⇨ 06/94
900 I 2.0 Turbo-16	B202L, B202XL	11/85 ⇨ 06/94
900 I 2.0 Turbo-16 S	B202XL	01/84 ⇨ 06/94
900 I 2.0 Turbo-16 S Cat	B202XL	01/89 ⇨ 12/93

FACET 8.3410 — 3,5

PICK-UPS

Adatt./Suitable: ***DELCO REMY***

GENERAL MOTORS
1 978 503

OPEL
12 12 126

[03] **Supplied until depletion**
- Fornibile fino ad esaurimento delle scorte
- Fourni jusqu'à épuisement du stock
- Lieferbar solange vorrat reicht
- Suministrado hasta el stock termina

L	ohm	Pick-Up
---	**800**	**Coil**

OPEL		
ASCONA C 1.6 i Cat	C16LZ, C16NZ	09/86 ⇨ 08/88
ASTRA F 1.6 i	C16NZ	09/91 ⇨ 09/98
CORSA A 1.3	C13N	09/85 ⇨ 10/87
CORSA A 1.3 i	C13N	09/86 ⇨ 09/90
CORSA A 1.6 GSI	C16NZ	08/88 ⇨ 09/92
KADETT E 1.3 i Cat	C13N	09/85 ⇨ 08/91
KADETT E 1.6 i	C16NZ	09/86 ⇨ 07/94
KADETT E 1.6 i Cat	C16LZ, C16NZ	09/86 ⇨ 02/93
VECTRA A 1.6 i	C16NZ, E16NZ, X16SZ	09/88 ⇨ 11/95
VECTRA A 1.6 i Cat	C16NZ	09/88 ⇨ 11/95
VAUXHALL		
ASTRA III 1.6 i	C16NZ	09/91 ⇨ 12/98
ASTRAVAN I 1.6 i	C16NZ	10/91 ⇨ 08/98

FACET 8.3411 — 3,5

PICK-UPS

Adatt./Suitable: ***DELCO REMY***

DELCO REMY
1 103 516 *N
1 103 549 *N

GENERAL MOTORS
1 979 511

OPEL
12 12 125

*N **Available pick-up coil only-not the distributor assy**
- Fornito solo impulsore, no lo spinterogeno completo
- Disponible seulement capteur, sans l'allumeur
- Erhältlich nur impulsgeber, ohne Zündverteiler
- Disponible solamente captador sin distribuidor

[03] **Supplied until depletion**
- Fornibile fino ad esaurimento delle scorte
- Fourni jusqu'à épuisement du stock
- Lieferbar solange vorrat reicht
- Suministrado hasta el stock termina

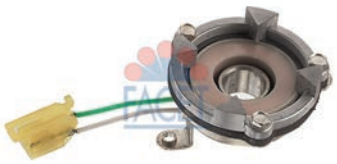

L	ohm	Pick-Up
---	**800**	**Coil**

OPEL		
ASCONA C 1.3 N	13N	09/81 ⇨ 08/86
ASCONA C 1.6	16SV	09/86 ⇨ 08/88
CORSA A 1.2	12S, 12ST	09/82 ⇨ 08/90
CORSA A 1.2 N	12NV	01/90 ⇨ 03/93
CORSA A 1.2 S	12S, 12ST	09/82 ⇨ 03/93
CORSA A 1.3	13NB, 13SB	09/85 ⇨ 10/89
CORSA A 1.3 GL	13S	09/82 ⇨ 03/93
CORSA A 1.3 S	13SB	09/82 ⇨ 10/89
KADETT D 1.2	12ST	08/82 ⇨ 08/84
KADETT E 1.3 N	13N, 13NB	09/84 ⇨ 08/91
KADETT E 1.3 S	13S	09/84 ⇨ 02/93
KADETT E 1.6	16SV	09/86 ⇨ 12/91
KADETT E 1.6 i	16SV	07/89 ⇨ 02/93
KADETT E 1.6 S	16SV	09/86 ⇨ 08/91

FACET 8.3617 — 3,5

PICK-UPS

Adatt./Suitable: ***DUCELLIER***

CITROËN
5904 K3
95 624 952

DUCELLIER
2 525 683 A *N
2 525 683 B *N
2 590 264
2 590 938

PEUGEOT
5904 K3
5904 K9

*N **Available pick-up coil only-not the distributor assy**
- Fornito solo impulsore, no lo spinterogeno completo
- Disponible seulement capteur, sans l'allumeur
- Erhältlich nur impulsgeber, ohne Zündverteiler
- Disponible solamente captador sin distribuidor

03 **Supplied until depletion**
- Fornibile fino ad esaurimento delle scorte
- Fourni jusqu'à épuisement du stock
- Lieferbar solange vorrat reicht
- Suministrado hasta el stock termina

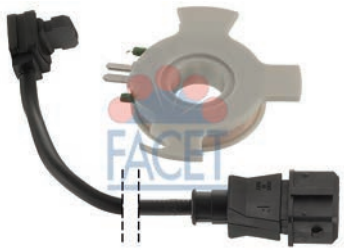

L	ohm	Pick-Up	
265	370	Coil	OUT GND S

CITROËN		
BX 1.6	B2C	02/88 ⇨ 12/94
BX 1.9	159B, 159C, D6U, DKK	05/85 ⇨ 12/94
BX 1.9 GTi	D6D, D6K	01/87 ⇨ 01/92
BX 15	B1E(XU51C)	01/87 ⇨ 05/92
BX 16	171A, 171B, 171C, 171D, 23DH, B1E(XU51C), BAY(XU5CP), BAZ(XU5CP)	10/82 ⇨ 12/94
BX 19	159A, D2A(XU92C), D2C(XU92C), D2E, D6A(XU9J2), DKZ(XU9JA)	09/84 ⇨ 12/94
BX 19 Cat	DFZ(XU9J1)	07/86 ⇨ 12/94
BX 19 E 4x4	D2F	04/89 ⇨ 02/93
BX 19 GTi	D6A(XU9J2), DKZ(XU9JA)	07/86 ⇨ 02/93
BX 19 GTi 4x4	DKZ(XU9JA)	06/88 ⇨ 02/93
PEUGEOT		
205 I 1.6	B1A(XU51C), B1E(XU51C), BAZ(XU5CP)	08/86 ⇨ 10/87
205 I 1.9 GTI	DFZ(XU9J1)	03/87 ⇨ 10/87
205 II 1.6	B1A(XU51C), B1E(XU51C), BAZ(XU5CP)	10/87 ⇨ 09/98
205 II 1.9 CTI	DFZ(XU9J1)	10/87 ⇨ 12/94
205 II 1.9 GTI Cat	DFZ(XU9J1)	10/87 ⇨ 07/94
309 I 1.6	B1A(XU51C), B1D(XU51C), B1E(XU51C)	10/85 ⇨ 07/89
309 I 1.6 Cat	BAZ(XU5CP)	09/86 ⇨ 12/89
309 I 1.9	D2B(XU9S), DFZ(XU9J1), XU92C	10/85 ⇨ 07/89
309 II 1.9	XU92C	07/89 ⇨ 12/93
405 I 1.9	DFZ(XU9J1)	05/88 ⇨ 08/92
405 I 1.9 Antipollution	XU92C	01/87 ⇨ 12/92
405 I 1.9 Injection	DFZ(XU9J1)	07/87 ⇨ 12/92
405 I 1.9 Trazione integrale	DFZ(XU9J1)	09/88 ⇨ 07/92

FACET 8.3619 — 3

PICK-UPS

Adatt./Suitable: ***DUCELLIER***

CITROËN
5900 F1 *N
5900 F6 *N
5900 F7 *N
5900 F8 *N
5900 F9 *N
5900 G2 *N
5900 H5 *N
5900 J3 *N
5900 K1 *N
5900 K7 *N
5900 K8 *N
5904 K8
95 624 987
95 643 723
96 001 914 *N
96 002 856 *N
96 004 266 *N
96 014 242 *N
96 020 587 *N
96 039 183 *N

DUCELLIER
2 525 765 A *N
2 590 945

FIAT
9564372380

PEUGEOT
5900 H1 *N
5900 H7 *N
5900 H9 *N
5900 J1 *N
5900 K3 *N
5900 K6 *N
5900 K7 *N
5904 K8
5904 L3
5904 P5

*N **Available pick-up coil only-not the distributor assy**
- Fornito solo impulsore, no lo spinterogeno completo
- Disponible seulement capteur, sans l'allumeur
- Erhältlich nur impulsgeber, ohne Zündverteiler
- Disponible solamente captador sin distribuidor

03 **Supplied until depletion**
- Fornibile fino ad esaurimento delle scorte
- Fourni jusqu'à épuisement du stock
- Lieferbar solange vorrat reicht
- Suministrado hasta el stock termina

L	ohm	Pick-Up	
---	370	Coil	

CITROËN		
AX 1.3 Sport	M4A	04/87 ⇨ 12/88
AX 10	C1A	09/86 ⇨ 06/92
AX 10 E	C3A	12/86 ⇨ 12/88
AX 11	H1A, H1B, HDZ(TU1M)	09/86 ⇨ 12/97
AX 11 4x4	H1A	06/91 ⇨ 07/92
AX 11 Cat	HAZ(TU1CP)	09/88 ⇨ 12/89
AX 14	K1A(TU3), K1B, K1F, K1G, K1J, K2A, K2B, K2D, KAY(TU3CP), KDX(TU3M/Z), KDY(TU3FM), KDY(TU3M), KDZ(TU3M/Z)	09/86 ⇨ 04/97
AX 14 4x4	KD4, KDX(TU3M/Z), KDY(TU3FM), KDY(TU3M), KDZ(TU3M/Z)	06/91 ⇨ 12/96
AX 14 GT	KDZ(TU3M/Z)	01/89 ⇨ 12/91
BX 1.1	109LA, H1A	04/86 ⇨ 06/91
BX 1.4	150C, K1F, K2D	07/86 ⇨ 12/94
BX 1.4 E	150B(XY8), 150J, 150Y, K1F, KAZ	09/82 ⇨ 12/94
BX 1.6	B2C	02/88 ⇨ 12/94
BX 1.9	159B, 159C, D6U, DKK	05/85 ⇨ 12/94
BX 1.9 GTi	D6D, D6K	01/87 ⇨ 01/92
BX 14	150C, KDY(TU3M), KDZ(TU3M/Z)	01/86 ⇨ 02/93
BX 14 E	150A, 150C, K1G	10/82 ⇨ 02/93
BX 15	B1E(XU51C)	01/87 ⇨ 05/92
BX 16	171A, 171B, 171C, 171D, 23DH, B1E(XU51C), BAY(XU5CP), BAZ(XU5CP)	10/82 ⇨ 12/94
BX 19	159A, D2A(XU92C), D2C(XU92C), D2E, D6A(XU9J2), DKZ(XU9JA)	09/84 ⇨ 12/94
BX 19 Cat	DFZ(XU9J1)	07/86 ⇨ 12/94
BX 19 E 4x4	D2F	04/89 ⇨ 02/93
BX 19 GTi	D6A(XU9J2), DKZ(XU9JA)	07/86 ⇨ 02/93
BX 19 GTi 4x4	DKZ(XU9JA)	06/88 ⇨ 02/93
C15 1.0	108C(XV8), C1A, C1A(TU9/K), C1B(TU9/W), TU9	10/84 ⇨ 12/97
C15 1.1	H1A, HDZ(TU1M), TU1	08/88 ⇨ 07/96
C15 1.1 i	HDZ(TU1M), TU1MZ	07/88 ⇨ 12/96

CITROËN		
C15 1.4	K1A, K1G, K1H(TU3A), KDY(TU3M)	07/87 ⇨ 12/96
C15 1.4 E	K1F, K1J, K2D, K3A, KAZ	07/86 ⇨ 12/96
C15 1.4 i	KDY(TU3FM), KDY(TU3M)	05/91 ⇨ 12/96
JUMPER I 2.0	XU102C	02/94 ⇨ 02/02
XM I 2.0	--	05/89 ⇨ 04/94
XM I 2.0 i	RFZ(XU10J2)	05/89 ⇨ 06/94
BERLINGO I 1.4	TU32	07/96 ⇨ 10/98
ZX 1.1	H1A, H1B, HDZ(TU1M), TU1	03/91 ⇨ 06/97
ZX 1.4 i	KDY(TU3M)	10/93 ⇨ 10/97
FIAT		
DUCATO II 2.0	--, R5B	03/94 ⇨ 12/95
PEUGEOT		
106 I 1.0	TU9	09/91 ⇨ 03/01
106 I 1.1	H1B(TU1), HDZ(TU1M)	08/91 ⇨ 04/96
106 I 1.4	K5A(TU3), KDY(TU3M), TU3.2	08/91 ⇨ 04/96
106 II 1.1	H1B(TU1)	04/96 ⇨
205 I 1.4	TU3	01/83 ⇨ 12/90
205 I 1.6	B1A(XU51C), B1E(XU51C)	08/86 ⇨ 10/87
205 II 1.0	TU9	10/87 ⇨ 09/98
205 II 1.1	H1B(TU1), HDZ(TU1M)	10/87 ⇨ 09/98
205 II 1.1 CJ	HDZ(TU1M)	10/89 ⇨ 12/94
205 II 1.4	K1D(TU3A), K2B(TU3S), KDY(TU3M), KDZ(TU3M)	06/87 ⇨ 09/98
205 II 1.4 CJ	K1D(TU3A), KDY(TU3M)	03/89 ⇨ 12/94
205 II 1.6	B1A(XU51C), B1E(XU51C)	10/87 ⇨ 09/98
306 1.4	TU3	01/93 ⇨ 04/02
309 I 1.4	K1D(TU3A), K2B(TU3S), KDY(TU3M), KDZ(TU3M)	08/88 ⇨ 08/89
309 II 1.1	H1B(TU1), HDZ(TU1M)	09/89 ⇨ 12/93
309 II 1.4	KDZ(TU3M), TU3, TU3F2	07/89 ⇨ 12/93
309 II 1.6	18EM, BDZ(XU5M)	07/89 ⇨ 12/93
309 II 1.9	DDZ(XU9M), XU92C	07/89 ⇨ 12/93
405 I 1.4	K5A(TU3), TU3A, TU3F2	01/87 ⇨ 12/92
405 I 1.6	--, 18EM, B1E(XU51C)	01/87 ⇨ 12/92
405 I 1.9	D2C(XU92C)	07/87 ⇨ 12/92
405 II 1.4	TU3F2	01/93 ⇨ 12/96
405 II 1.6	18EM	08/92 ⇨ 05/97
405 II 1.9	XU92C	01/93 ⇨ 12/96
605 2.0	R5A(XU102C)	06/89 ⇨ 09/99
BOXER I 2.0	R5B(XU102C)	02/94 ⇨ 02/02
RANCH 1.4	K5A(TU3.2)	09/96 ⇨ 08/02

FACET 8.4702 — 3,5

PICK-UPS

Adatt./Suitable: ***LUCAS***

GENERAL MOTORS
90 346 324 *N

OPEL
12 11 006 *N

*N **Available pick-up coil only-not the distributor assy**
- Fornito solo impulsore, no lo spinterogeno completo
- Disponible seulement capteur, sans l'allumeur
- Erhältlich nur impulsgeber, ohne Zündverteiler
- Disponible solamente captador sin distribuidor

L	ohm	Pick-Up
---	---	Hall

OPEL		
ASTRA F 1.4 i	C14NZ	09/91 ⇨ 01/05
CORSA A 1.2 i	C12NZ	09/89 ⇨ 03/93
CORSA A 1.6 GSI	E16SE	05/88 ⇨ 03/92
VAUXHALL		
ASTRA III 1.4 i	C14NZ	09/91 ⇨ 09/98
ASTRAVAN I 1.4 i	C14NZ	09/91 ⇨ 08/95

FACET 8.4961/1 — 04

PICK-UPS

Adatt./Suitable: ***MARELLI***

ABARTH
9939762

FIAT
9934729
9939762

LANCIA
9934729

MAGNETI MARELLI
071319801010
610 800 24 *N
712 160 01
713 198 01

***N Available pick-up coil only-not the distributor assy**

- Fornito solo impulsore, no lo spinterogeno completo
- Disponible seulement capteur, sans l'allumeur
- Erhältlich nur impulsgeber, ohne Zündverteiler
- Disponible solamente captador sin distribuidor

03 Supplied until depletion

- Fornibile fino ad esaurimento delle scorte
- Fourni jusqu'à épuisement du stock
- Lieferbar solange vorrat reicht
- Suministrado hasta el stock termina

L	ohm	Pick-Up	
700	730	Coil	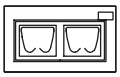

ABARTH		
RITMO 125 TC 2.0	138AR1.000	11/81 ⇨ 12/87
FIAT		
132 2.0	132C2.000	01/76 ⇨ 06/81
RITMO II 105 1.6	138AR.000	01/83 ⇨ 12/87
LANCIA		
A 112 1.0 Abarth	A112A2.000	03/78 ⇨ 02/84

FACET 8.4963/1 — 3,5

PICK-UPS

Adatt./Suitable: ***MARELLI***

FIAT
9936331

LANCIA
9936331

MAGNETI MARELLI
071319804010
712 160 03
713 198 04
SM 807 AX *N

***N Available pick-up coil only-not the distributor assy**

- Fornito solo impulsore, no lo spinterogeno completo
- Disponible seulement capteur, sans l'allumeur
- Erhältlich nur impulsgeber, ohne Zündverteiler
- Disponible solamente captador sin distribuidor

03 Supplied until depletion

- Fornibile fino ad esaurimento delle scorte
- Fourni jusqu'à épuisement du stock
- Lieferbar solange vorrat reicht
- Suministrado hasta el stock termina

L	ohm	Pick-Up	
780	730	Coil	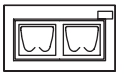

FIAT		
124 Spider, Sport [USA]	--	01/79 ⇨ 12/86
131 2.0 Brava [USA]	--	01/79 ⇨ 12/84
LANCIA		
BETA 1600	828B.000	08/73 ⇨ 07/82

FACET 8.4976M — 3,5

PICK-UPS

Adatt./Suitable: ***MARELLI***

FIAT
9939788
9941231
9941693

INNOCENTI
9941693

LANCIA
9939788

MAGNETI MARELLI
713 284 01
713 473 01
713 491 01

***N Available pick-up coil only-not the distributor assy**

- Fornito solo impulsore, no lo spinterogeno completo
- Disponible seulement capteur, sans l'allumeur
- Erhältlich nur impulsgeber, ohne Zündverteiler
- Disponible solamente captador sin distribuidor

03 Supplied until depletion

- Fornibile fino ad esaurimento delle scorte
- Fourni jusqu'à épuisement du stock
- Lieferbar solange vorrat reicht
- Suministrado hasta el stock termina

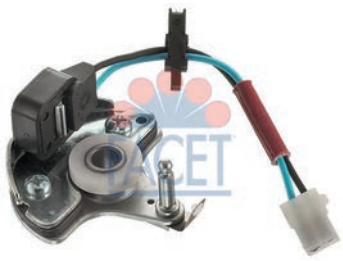

L	ohm	Pick-Up
---	830	Coil

FIAT		
DUNA 60 1.1	146A6.000	01/87 ⇨ 12/91
DUNA 70 1.3	146A5.000	01/87 ⇨ 12/91
ELBA 1.3	146A5.000	04/91 ⇨ 02/95
FIORINO I 1.1 60	146A9.000	11/86 ⇨ 04/88
FIORINO I 1.3	146A5.000	12/87 ⇨ 08/93
FIORINO II 1.3	146A5.000	01/88 ⇨ 12/94
FIORINO II 60 1.1	146A9.000	05/88 ⇨ 12/93
FIORINO II 70 1.3	146A5.000	01/88 ⇨ 12/94
REGATA 70 1.3	138B2.000, 149A3.000	09/83 ⇨ 07/89
RITMO I 1.3	149A3.000	11/83 ⇨ 08/85
TEMPRA 1.4 i.e.	159A2.000	04/90 ⇨ 08/96
TIPO I 1.4	160A1.000	07/87 ⇨ 12/89
TIPO I 1.4 i.e.	159A2.000	05/89 ⇨ 04/95
UNO 60 1.1	146A4.048, 146A6.000	02/88 ⇨ 02/92
UNO 60 1.1 SX	--	01/85 ⇨ 12/89
UNO CS 1.1	146A6.000	09/87 ⇨ 09/91
FIAT (BR)		
UNO CS 1116	--	01/88 ⇨
INNOCENTI		
ELBA 1.3	146A5.000	08/91 ⇨ 12/96
LANCIA		
DELTA I 1.1	831B8.000	01/86 ⇨ 12/90
DELTA I 1.3	1831B.000, 3831B.000, 831A2.000, 831B.000	09/79 ⇨ 10/92
PRISMA 1.3	831A2.000	01/83 ⇨ 12/89

FACET 8.4977/1

3

PICK-UPS

Adatt./Suitable: ***MARELLI***

FIAT
9940429
FORD
1 641 614
INNOCENTI
9940429
LANCIA
9940429
MAGNETI MARELLI
610 453 24 *N
713 269 01

*N **Available pick-up coil only-not the distributor assy**
- Fornito solo impulsore, no lo spinterogeno completo
- Disponible seulement capteur, sans l'allumeur
- Erhältlich nur impulsgeber, ohne Zündverteiler
- Disponible solamente captador sin distribuidor

03 **Supplied until depletion**
- Fornibile fino ad esaurimento delle scorte
- Fourni jusqu'à épuisement du stock
- Lieferbar solange vorrat reicht
- Suministrado hasta el stock termina

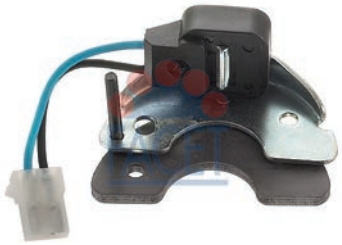

L	ohm	Pick-Up
---	**830**	**Coil**

FIAT		
COUPE 2.0 16V	836A3.000	11/93 ⇨ 08/96
COUPE 2.0 16V [BRA]	836A3.011	11/93 ⇨ 08/96
CROMA I 2000 i.e.	154C3.000, 834B.000, 834B.048	03/86 ⇨ 09/92
FIORINO II 1.6	146C6.000	01/94 ⇨ 05/01
FIORINO II 75 i.e. 1.6	146C6.000	10/93 ⇨ 05/01
REGATA 90 i.e. 1.6	149C2.000	01/87 ⇨ 07/89
TEMPRA 1.4 i.e.	160A1.046	04/90 ⇨ 08/96
TEMPRA 1.6	159A3.000, 159A3.048, 159A3.098	04/90 ⇨ 12/96
TEMPRA 1.6 i.e.	159A3.048	06/92 ⇨ 08/96
TEMPRA 1.8 4x4	159A4.000	07/92 ⇨ 06/93
TEMPRA 1.8 i.e.	159A4.000, 159A4.046	03/90 ⇨ 08/96
TEMPRA 2.0	159A6.046	04/90 ⇨ 06/93
TEMPRA 2.0 i.e.	159A6.046	10/90 ⇨ 09/96
TEMPRA 2.0 i.e. [BRA]	159A6.011	04/93 ⇨ 12/96
TEMPRA 2.0 i.e. 4x4	159A6.046	03/92 ⇨ 03/95
TIPO I 1.6	159A3.048	03/93 ⇨ 10/95
TIPO I 1.6 i.e.	159A3.048	10/92 ⇨ 04/95
TIPO I 1.8 i.e.	159A4.000, 159A4.046	10/90 ⇨ 06/93
TIPO I 1.8 i.e.16V Sport	160A5.000	11/89 ⇨ 06/92
TIPO I 2.0	159A5.046, 159A6.046, 836A3.011	10/90 ⇨ 04/95
TIPO I 2.0 16V	160A8.046	07/91 ⇨ 04/95
TIPO I 2.0 i.e.	159A5.046, 159A6.046	03/90 ⇨ 04/95
TIPO I 2.0 i.e. [BRA]	159A6.011	03/93 ⇨ 10/95
TIPO I 2.0 i.e. 16V Sport	836A3.000	03/93 ⇨ 04/95
FIAT (BR)		
COUPÈ 2.0i 16V	2.0Mpi	01/95 ⇨ 12/97
TIPO 2.0i 16V	2.0Mpi	01/94 ⇨ 12/95
TIPO 2.0i 8v	2.0Mpi	01/94 ⇨ 12/95
INNOCENTI		
ELBA 1.6 i.e.	146C6.000	09/94 ⇨ 12/96
LANCIA		
DEDRA 1.8 i.e.	835A2.000, 835A2.046, 835C5.000	09/89 ⇨ 07/99
DEDRA 2.0 16V	836A3.000	07/94 ⇨ 07/99
DEDRA 2.0 HF Integrale	835A7.046	11/90 ⇨ 07/94
DEDRA 2.0 i.e.	835A5.000, 835A5.046	09/89 ⇨ 07/99
DEDRA 2.0 i.e. Turbo	835A8.046	04/91 ⇨ 07/99
DEDRA 2.0 i.e. Turbo Integrale	835A7.000	04/90 ⇨ 08/91
DEDRA 2.0 Integrale	836A3.000	07/94 ⇨ 07/99
DEDRA 2.0 Turbo	835A8.000	11/90 ⇨ 06/94
DELTA I 1.6 GT i.e.	149C2.000, 831B7.000	08/86 ⇨ 08/92
DELTA I 1.6 HF Turbo	831B3.000, 831B7.046	08/86 ⇨ 03/89
LANCIA		
DELTA I 2.0 16V HF Evo Integrale	831E5.000	06/93 ⇨ 01/94
DELTA I 2.0 16V HF Integrale	831D5.000	03/89 ⇨ 09/91
DELTA I 2.0 HF Integrale	831B5.000, 831C5.000, 831C5.046	11/86 ⇨ 12/92
DELTA II 1.4 i.e.	160A1.046	10/94 ⇨ 08/99
DELTA II 2.0 16V	836A3.000	06/93 ⇨ 08/99
PRISMA 1.6 i.e.	831B7.000	05/86 ⇨ 12/89
PRISMA 2.0 i.e. Trazione integrale	831B4.000	04/86 ⇨ 12/89

FACET 8.4978M

04

PICK-UPS

Adatt./Suitable: ***MARELLI***

PEUGEOT
5904 F1

03 **Supplied until depletion**
- Fornibile fino ad esaurimento delle scorte
- Fourni jusqu'à épuisement du stock
- Lieferbar solange vorrat reicht
- Suministrado hasta el stock termina

L	ohm	Pick-Up	
800	**830**	**Coil**	OUT GND S

PEUGEOT		
505 2.0	106E(XN1A)	09/85 ⇨ 09/95

FACET 8.4980M

3,5

PICK-UPS

Adatt./Suitable: ***MARELLI***

FIAT
9939786
9941720
LANCIA
9939786
MAGNETI MARELLI
611 101 03 *N
611 101 26 *N
713 277 01
713 474 01
PIAGGIO
498325

*N **Available pick-up coil only-not the distributor assy**
- Fornito solo impulsore, no lo spinterogeno completo
- Disponible seulement capteur, sans l'allumeur
- Erhältlich nur impulsgeber, ohne Zündverteiler
- Disponible solamente captador sin distribuidor

03 **Supplied until depletion**
- Fornibile fino ad esaurimento delle scorte
- Fourni jusqu'à épuisement du stock
- Lieferbar solange vorrat reicht
- Suministrado hasta el stock termina

L	ohm	Pick-Up
---	**830**	**Coil**

FIAT		
FIORINO II 1.0 iE	156A2.246	11/92 ⇨ 04/96
PALIO 1.1	178B9.033	07/97 ⇨ 10/03
PANDA I 1.1	156C.046	05/91 ⇨ 03/95
PANDA I 1000	156A2.100, 156A3.000	01/85 ⇨ 12/92
PANDA I 1000 4x4	156A2.100, 156A2.246, 156A3.000	01/86 ⇨ 12/94
PANDA I 1000 Fire [CHE]	156A2.146	11/87 ⇨ 04/91
PANDA I 1000 Fire [DEU]	156A2.048	01/86 ⇨ 07/89
PANDA I 1000 i.e	156A2.246	08/92 ⇨ 02/04
PANDA I 1000 i.e. Cat	156A2.246	10/87 ⇨ 08/98
PANDA I 1100 i.e.	156C.046	01/86 ⇨ 04/91
PANDA I 1100 Trekking 4x4	156C.046	10/91 ⇨ 07/04
PANDA I 750 Cat	156A4.048	01/95 ⇨ 10/03
PANDA I 750 Fire	156A4.048	11/88 ⇨ 04/91
TIPO I 1.1	160A3.000	01/88 ⇨ 10/91
UNO 1.0	146A2.166	11/94 ⇨ 08/00
UNO 45 1.0	156A2.000, 156A2.100	06/86 ⇨ 12/93
UNO 45 1.0 Fire	--	01/83 ⇨ 12/89
UNO 45 i.e. 1.0	156A2.246	10/84 ⇨ 10/95
UNO 50 1.1	156C.046	01/90 ⇨ 12/93
UNO 50 i.e. 1.1	146C3.000	06/92 ⇨ 12/93
UNO 60 1.1	160A3.000	04/89 ⇨ 12/92
UNO Mondo 1.0	146A2.166	01/98 ⇨
UNO Mondo 1.0 [IND]	146A2.166	01/98 ⇨
LANCIA		
Y10 1.0 Fire	156A2.100	06/85 ⇨ 06/91
Y10 1.0 Fire Catalytic-Conv	156A2.246	10/87 ⇨ 02/92
Y10 1.0 Fire Trazione integrale	156A2.000, 156A2.100, 156A2.246	12/86 ⇨ 02/92
Y10 1.1 i.e Fire	156C.000	08/89 ⇨ 06/92
Y10 1.1 i.e Fire Trazione integrale	156C.000	08/89 ⇨ 06/92
Y10 1.1 i.e. Fire	156C.046	07/89 ⇨ 09/95

FACET 8.4982

3,5

PICK-UPS

Adatt./Suitable: ***MARELLI***

MAGNETI MARELLI
DT 458 BX *N

SEAT
030 905 205 AE *N

VW
030 905 205 AE *N

*N **Available pick-up coil only-not the distributor assy**

- Fornito solo impulsore, no lo spinterogeno completo
- Disponible seulement capteur, sans l'allumeur
- Erhältlich nur impulsgeber, ohne Zündverteiler
- Disponible solamente captador sin distribuidor

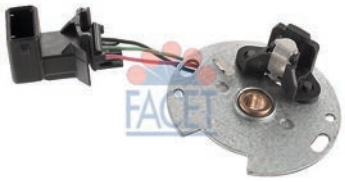

L	ohm	Pick-Up	
---	---	**Hall**	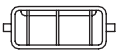

SEAT		
CORDOBA I 1.0 i	AER	09/96 ⇨ 10/02
CORDOBA I 1.4	ANX	12/97 ⇨ 04/99
CORDOBA I 1.4 i	AKV, APQ	06/94 ⇨ 12/02
CORDOBA I 1.4 i 16V	AFH	09/96 ⇨ 10/02
CORDOBA I 1.6 i	AEE, ALM	02/93 ⇨ 12/02
VW		
GOLF III 1.4	AEX, AEX	10/91 ⇨ 04/99
GOLF III 1.6	AEE	09/92 ⇨ 08/97

MODULES

•MODULI •MODULES •MODULE •MODULOS

(A) P/NRS. - NOTES

- CODICI - NOTE
- RÉFS. - NOTES
- ARTIKEL-NR. - ANMERKUNGEN
- CODIGOS - NOTAS

9.4076 3,5

IGNITION MODULES

Adatt./Suitable:

AUDI
4D0 905 351

BOSCH
0 227 100 030
0 227 100 211
0 227 100 212

SEAT
4D0 905 351

SKODA
4D0 905 351

VW
4D0 905 351

03 **Supplied until depletion**
- Fornibile fino ad esaurimento delle scorte
- Fourni jusqu'à épuisement du stock
- Lieferbar solange vorrat reicht
- Suministrado hasta el stock termina

1114 **Supplied with heat conducting silicone grease capsule**
- Fornito con capsula di grasso termico al silicone
- Fourni avec capsule contenant graisse termique au silicone
- Geliefert mit Thermo-Silikonfettkapsel
- Suministrado con capsula de grasa termica de silicona

(B) PICTURE + TECHNICAL INFO

- FOTO + INFORMAZIONE TECNICA
- ILLUSTRATION + INFORMATION TÉCHNIQUE
- BILD + TECHNISCHE INFO
- FOTO + INFORMACIÓN TÉCNICA

(C) APPLICATION LIST

- GUIDA APPLICAZIONI
- LISTE D'APPLICATIONS
- ANWENDUNGSTABELLE
- LISTA DE APLICACIONES

AUDI		
A3 I 1.8 T	AGU	12/96 ⇨ 05/03
A3 I 1.8 T quattro	AGU	12/96 ⇨ 05/03
A4 I 1.8 T	AEB	01/95 ⇨ 09/01
A4 I 1.8 T quattro	AEB	01/95 ⇨ 09/01
A4 II 1.8 T	AVJ	11/00 ⇨ 07/02
A4 II 1.8 T quattro	AVJ	11/00 ⇨ 07/02
A6 I S6 Plus quattro	AHK	04/96 ⇨ 12/97
A6 II 1.8 T	AEB	01/97 ⇨ 01/05
A6 II 1.8 T quattro	AEB	02/97 ⇨ 01/05
A8 I 3.7	AEW, AKJ	07/95 ⇨ 12/98
A8 I 3.7 quattro	AEW, AKJ	07/95 ⇨ 11/98
A8 I 4.2 quattro	ABZ, AEM, AGH, AKG	03/94 ⇨ 11/98
A8 I S8 quattro	AHC, AKH	07/96 ⇨ 06/99
SEAT		
ALHAMBRA I / II 1.8 T 20V	AJH	10/97 ⇨ 03/10
LEON I 1.8 20V T	APP	11/99 ⇨ 06/06
SKODA		
OCTAVIA I 1.8 T	AGU, ARX, AUM	08/97 ⇨ 12/10
OCTAVIA I 1.8 T 4x4	ARX	05/01 ⇨ 05/06
OCTAVIA I RS 1.8 T	AUQ	05/01 ⇨ 01/06

(A)

1 **# FACET**

2 **OEM P/NRS.**
·CODICI ORIGINALI
·RÉFS. D'ORIGINE
·ORIGINALTEILE-NR.
·CODIGOS ORIGINALES

3 **PACKAGING SIZE**
·FORMATO CONFEZIONE
·FORMAT DU CONDITIONNEMENT
·ABPACKENSGROESSE
·TAMAÑO DEL ENVASE

4 **NOTE**
·NOTE
·NOTES
·BEMERKUNGEN
·NOTAS

(B)

1 **PICTURE**
·FOTO
·PHOTO
·BILD
·FOTO

FACET 9.4004 — 3,5

IGNITION MODULES

Adatt./Suitable:

AUDI
211 905 351

BMW
12 14 1 244 089
12 14 1 244 191
12 14 1 244 477

BOSCH
0 227 100 100
0 227 100 101
0 227 100 103
0 227 100 104
0 227 100 113
0 227 100 118
0 227 100 137
0 227 100 138
0 227 100 139
1 227 022 008

GENERAL MOTORS
90 008 145
90 114 676
90 140 187

LADA
2108-3734910-10
3700-3118583

MAGNETI MARELLI
940038500010

OPEL
12 08 241
12 08 246

SAAB
93 90 220

SCANIA
2573826

SEAT
SE 021913.010A

SIEMENS
2576 12.70.01
5WK 6105

TELEFUNKEN
318 738
335 622
339 109

VAUXHALL
90006145
90114676
90140187

VW
211 905 351
211 905 351 A
211 905 351 B
211 905 351 D
211 905 351 E

1114 Supplied with heat conducting silicone grease capsule
- Fornito con capsula di grasso termico al silicone
- Fourni avec capsule contenant graisse termique au silicone
- Geliefert mit Thermo-Silikonfettkapsel
- Suministrado con capsula de grasa termica de silicona

HALL TYPE MODULE

AUDI		
80 II 1.6	WV	08/78 ⇨ 07/86
80 III 1.8 quattro	SD	09/86 ⇨ 08/90
80 III 1.8 S quattro	JN	09/86 ⇨ 09/91
90 II 2.2 E quattro	9C54	04/87 ⇨ 09/91
100 III 1.8	DR	08/82 ⇨ 12/87
100 III 1.9	WH	08/82 ⇨ 07/84
100 III 2.2	KZ	10/84 ⇨ 09/86
200 II 2.2	KU	08/84 ⇨ 07/85
COUPE 2.2 GT	9C54	09/84 ⇨ 10/88
COUPE 2.2 quattro	9C54, JT	10/84 ⇨ 10/88
OPEL		
KADETT E 1.6 S	16S	09/84 ⇨ 08/86
KADETT E 1.8	18SE	01/86 ⇨ 08/91
KADETT E 1.8 GSI	18E	09/84 ⇨ 08/86
KADETT E 1.8 i	18E	09/84 ⇨ 08/86
SAAB		
90 2.0	B20I	08/84 ⇨ 08/87
900 I 2.0 -16	B202XI	01/86 ⇨ 12/88
900 I 2.0 c	B201XC	09/79 ⇨ 12/88
900 I 2.0 i	0TLE4G15, B201XI	11/80 ⇨ 08/90
900 I 2.0 Turbo	B201XL	01/86 ⇨ 12/91
900 I 2.0 Turbo-16	B202L, B202XL	11/85 ⇨ 06/94
900 I 2.0 Turbo-16 S	B202XL	01/84 ⇨ 06/94
900 I 2.0 Turbo-16 S Cat	B202XL	01/89 ⇨ 12/93
9000 2.0 -16 Turbo	B202XL	09/84 ⇨ 08/93
9000 2.0 -16 Turbo CD	B202XL	09/88 ⇨ 08/93

VW		
PASSAT II 1.3	79SU16	08/80 ⇨ 07/86
PASSAT II 1.6	DT	08/80 ⇨ 03/88
PASSAT II 1.8	DS	01/83 ⇨ 03/88
PASSAT II 1.8 Syncro	DS	01/86 ⇨ 03/88
PASSAT II 1.9	WN	01/81 ⇨ 07/83
PASSAT II 2.0	JS	08/83 ⇨ 03/88
PASSAT II 2.0 Syncro	JS	05/84 ⇨ 03/88
PASSAT II 2.2	KX	01/85 ⇨ 03/88
POLO II 1.0	HZ	01/85 ⇨ 09/94
POLO II 1.3	MH	08/83 ⇨ 07/88
POLO II 1.3 Cat	MH, NZ	07/87 ⇨ 09/94
DERBY 1.3	GK, HK	09/82 ⇨ 12/84
QUANTUM 2.1	--	01/81 ⇨ 12/89
SANTANA 1.6	DT	08/81 ⇨ 12/84
SANTANA 1.8	DS	01/83 ⇨ 12/84
SANTANA 1.9	WN	08/81 ⇨ 07/83
SANTANA 2.0	JS	08/83 ⇨ 12/84
SCIROCCO II 1.3	GF	08/80 ⇨ 12/83

FACET 9.4005 — 3,5

IGNITION MODULES

Adatt./Suitable:

ALFA ROMEO
60750065

BMW
12 14 1 266 702
12 14 1 273 217
12 14 1 273 298
12 14 1 274 698

BOSCH
0 227 100 102
0 227 100 110
0 227 100 111
0 227 100 112
0 227 100 123

CITROËN
5945 48
91 504 912
91 506 338
97 522 876
97 530 125
97 531 922
97 532 831

DUCELLIER
521 008
521 013
594 525
2 528 008 A
7 350 370 2

FIAT
9753012580
9753283180
9753293180

GENERAL MOTORS
90 295 499

MAGNETI MARELLI
648 330 20
BKL 2 A
MTR 01

OPEL
12 08 248

PEUGEOT
5927 90
5945 02
5945 03
5945 25
5945 31
5945 33
5945 39
5945 48

SIEMENS
17-5607

TALBOT
0057 18 9700
9150 49 1280
9150 63 3880

03 Supplied until depletion
- Fornibile fino ad esaurimento delle scorte
- Fourni jusqu'à épuisement du stock
- Lieferbar solange vorrat reicht
- Suministrado hasta el stock termina

1114 Supplied with heat conducting silicone grease capsule
- Fornito con capsula di grasso termico al silicone
- Fourni avec capsule contenant graisse termique au silicone
- Geliefert mit Thermo-Silikonfettkapsel
- Suministrado con capsula de grasa termica de silicona

ALFA ROMEO		
33 I 1.3	AR30168	10/84 ⇨ 12/89
33 I 1.3 i.e.	AR30168	05/83 ⇨ 12/89
33 I 1.5 4x4	AR30508	12/86 ⇨ 03/89
BMW		
3 II 316	M10B18(184VC), M10B18(184VD)	09/83 ⇨ 06/88
3 II 323 i	M20B23(236EC)	09/82 ⇨ 09/86
3 I 315	M10B16(164VB)	03/81 ⇨ 03/84
5 II 518	M10B18(184VC), M10B18(184VD)	06/81 ⇨ 09/84

BMW		
5 II 520 i	M20B20(206EA), M20B20(206KA)	06/81 ⇨ 12/87
5 II 525 i	M30B25(256EA)	06/81 ⇨ 12/87
5 II 528 i	M30B28(286EA)	06/81 ⇨ 12/87
5 II 528 i [USA]	--	01/81 ⇨ 12/87
5 I 518	M10B18(184VB)	07/74 ⇨ 05/81
6 I 628 CSi	M30B28	09/79 ⇨ 08/87
6 I 633 CSi	0SU18	10/75 ⇨ 08/84
6 I 635 CSi	M30B35(Motronic, 9.3:1)	06/78 ⇨ 04/82
7 I 728	M30B28	05/77 ⇨ 08/79
7 I 728 i	M30B28	09/77 ⇨ 08/86
7 I 730	M30B30	05/77 ⇨ 08/79
CITROËN		
AXEL 11	--	01/84 ⇨ 03/91
BX 1.1	109LA, H1A	04/86 ⇨ 06/91
BX 1.4	150C, K1F, K2D	07/86 ⇨ 12/94
BX 1.4 E	150B(XY8), 150J, 150Y, K1F, KAZ	09/82 ⇨ 12/94
BX 1.6	182A, B2C, B6D, B6E	01/87 ⇨ 12/94
BX 1.9	159B, 159C, D6U, DKK	05/85 ⇨ 12/94
BX 1.9 GTi	D6D, D6K	01/87 ⇨ 01/92
BX 1.9 GTi 16V	159K, DFK	01/87 ⇨ 12/94
BX 14	150C	01/86 ⇨ 02/93
BX 14 E	150A, 150C, K1G	10/82 ⇨ 02/93
BX 15	B1E(XU51C)	01/87 ⇨ 05/92
BX 16	171A, 171B, 171C, 171D, 180Z, 23DH, B1E(XU51C), BAY(XU5CP), BAZ(XU5CP)	10/82 ⇨ 12/94
BX 19	159A, D2A(XU92C), D2C(XU92C), D2E, D6A(XU9J2), DKZ(XU9JA)	09/84 ⇨ 12/94
BX 19 Cat	DFZ(XU9J1)	07/86 ⇨ 12/94
BX 19 E 4x4	D2F	04/89 ⇨ 02/93
BX 19 GTi	D6A(XU9J2), DKZ(XU9JA)	07/86 ⇨ 02/93
BX 19 GTi 16V	D6C(XU9J4), DFW(XU9J4)	09/87 ⇨ 02/93
BX 19 GTi 4x4	DKZ(XU9JA)	06/88 ⇨ 02/93
C15 1.0	108C	10/84 ⇨ 07/88
C15 1.0 E	TU9K	11/92 ⇨ 07/96
C15 1.1	109K, E1A, XW7	10/84 ⇨ 12/96
C15 1.3	G1A	07/87 ⇨ 05/88
C15 1.4	150D(XY7)	05/87 ⇨ 10/92
C15 1.4 E	150D(XY7)	05/87 ⇨ 12/96
CX II 20 RE	829A5	08/85 ⇨ 12/92
CX II 22 TRS	J6TA500	07/85 ⇨ 12/92
GS A 1.3	G13/625	07/78 ⇨ 07/86
XM I 2.0 i	RDZ(XU10MZ)	05/89 ⇨ 04/94
LNA 1.1	109/5E	07/82 ⇨ 04/85
VISA 11 E	109K	09/78 ⇨ 06/88
ZX 1.9	D6E(XU9JA)	03/91 ⇨ 06/97
ZX 1.9 i	DKZ(XU9JA), XU9JA	03/91 ⇨ 06/97
FIAT		
DUCATO I 1.8	169B	01/82 ⇨ 12/88
DUCATO I 2.0	170B, 170D, 170C(XN1T), XN1T	01/82 ⇨ 05/94
DUCATO I 2.0 4x4	170D	06/90 ⇨ 05/94
TALENTO 2.0	170B	03/89 ⇨ 03/94
OPEL		
ASTRA F 1.4	14NV	09/91 ⇨ 09/93
CORSA A 1.2	12NC, E12GV	09/82 ⇨ 08/90
CORSA A 1.2 N	12NC, E12GV	01/85 ⇨ 10/87
CORSA A 1.4 S	14NV	09/89 ⇨ 03/93
KADETT E 1.4 S	14NV	07/89 ⇨ 02/93
VECTRA A 1.4 S	14NV	04/88 ⇨ 06/92
PEUGEOT		
104 1.0	108C(XV8)	09/83 ⇨ 06/88
205 I 1.0	108C(XV8)	02/83 ⇨ 12/90
205 I 1.1	109F(XW7), 109N(XW7)	02/83 ⇨ 10/87
205 I 1.3	G1A	02/84 ⇨ 10/87
205 I 1.4	150(XY6B), 150B(XY8), 150D(XY7), 150G(XY7), 150H(XY8), J2	01/83 ⇨ 12/90
205 I 1.5	Y2/K	02/84 ⇨ 10/87
205 I 1.6	B1A(XU51C), B1E(XU51C), BAZ(XU5CP)	08/86 ⇨ 10/87
205 I 1.6 GTI	180A(XU5J), B6D(XU5JA), XU5J1	01/83 ⇨ 12/90
205 I 1.9 GTI	D6B(XU9JA), DFZ(XU9J1)	10/86 ⇨ 10/87
205 II 1.1	109N(XW7)	10/87 ⇨ 10/90
205 II 1.1 XA	E1	07/87 ⇨ 10/88
205 II 1.2	F1	01/87 ⇨ 12/90
205 II 1.3	G1A	08/90 ⇨ 07/92
205 II 1.4	150(XY6B), 150B(XY8), 150D(XY7), 150G(XY7), 150H(XY8), J2	01/87 ⇨ 12/94
205 II 1.4 CJ	150D(XY7), 150G(XY7)	03/88 ⇨ 05/89
205 II 1.4 CT	150B(XY8), 150H(XY8)	04/86 ⇨ 12/88
205 II 1.6	B1A(XU51C), B1E(XU51C), BAZ(XU5CP)	10/87 ⇨ 09/98
205 II 1.6 CTI	180A(XU5J), 180Z(XU5J)	03/86 ⇨ 10/90
205 II 1.6 GTI	180A(XU5J), 180Z(XU5J), XU5JA	10/87 ⇨ 12/94
205 II 1.9 CTI	DFZ(XU9J1)	10/87 ⇨ 12/94

PEUGEOT		
205 II 1.9 GTI	D6B(XU9JA), DKZ(XU9JAZ)	10/87 ⇨ 09/98
205 II 1.9 GTI Cat	DFZ(XU9J1)	10/87 ⇨ 07/94
305 1.5	117(XR5S)	05/80 ⇨ 09/82
309 I 1.1	E1	10/85 ⇨ 07/89
309 I 1.3	G1A, G2S	10/85 ⇨ 08/89
309 I 1.3 XL	--	09/86 ⇨ 08/89
309 I 1.5	Y2/K	06/87 ⇨ 12/89
309 I 1.6	--, 180Z(XU5J), B1A(XU51C), B1D(XU51C), B1E(XU51C), B6B(XU5J), J2, XU5JA	10/85 ⇨ 07/89
309 I 1.6 Cat	BAZ(XU5CP)	09/86 ⇨ 12/89
309 I 1.9	D2B(XU9S), DFZ(XU9J1), XU92C	10/85 ⇨ 07/89
309 I 1.9 GTI	D6B(XU9JA)	10/86 ⇨ 07/89
309 II 1.6	18EM, J2, XU5JA	07/89 ⇨ 12/93
309 II 1.6 GTi	--	09/89 ⇨ 10/93
309 II 1.9	XU92C	07/89 ⇨ 12/93
309 II 1.9 GTI	DKZ(XU9JAZ)	07/89 ⇨ 12/93
309 II 1.9 GTI 16V	D6C(XU9J4)	08/89 ⇨ 07/90
405 I 1.6	B1E(XU51C), BDZ(XU5M)	07/87 ⇨ 12/92
405 I 1.6 4x4	BDZ(XU5M)	04/88 ⇨ 07/92
405 I 1.6 SRi 4x4	BDZ(XU5M)	04/88 ⇨ 07/92
405 I 1.9	D6C(XU9J4), DFZ(XU9J1), DKZ(XU9JAZ), XU9J2, XU9J2/D6D	01/87 ⇨ 12/92
405 I 1.9 4x4	D6C(XU9J4), DKZ(XU9JAZ)	06/87 ⇨ 07/92
405 I 1.9 Antipollution	XU92C	01/87 ⇨ 12/92
405 I 1.9 Injection	DFZ(XU9J1)	07/87 ⇨ 12/92
405 I 1.9 Sport MI-16	D6C(XU9J4), DFW(XU9J4Z)	06/87 ⇨ 11/92
405 I 1.9 SPort MI-16 4x4	DFW(XU9J4Z)	06/87 ⇨ 07/92
405 I 1.9 Trazione integrale	D6C(XU9J4), DFZ(XU9J1)	06/87 ⇨ 07/92
505 2.0	106E(XN1A)	09/85 ⇨ 09/95
505 2.0 TI, STI	829(ZEJ)	08/79 ⇨ 10/86
505 2.1 i	XN9T	01/83 ⇨ 12/88
505 2.2	851(ZDJ), 851X(ZDJL)	05/81 ⇨ 12/93
505 2.2 GTI	851B(ZDJL)	08/83 ⇨ 12/93
J5 1.8	169B(XM7T)	01/83 ⇨ 11/88
J9 2.0	XN1P	03/80 ⇨ 06/87
VAUXHALL		
ASTRA III 1.4	14NV	09/91 ⇨ 09/93
ASTRA III 1.4 S	14NV	09/91 ⇨ 02/98

FACET **9.4007** 3,5

IGNITION MODULES

Adatt./Suitable:

AUDI
191 905 351 B

BOSCH
0 227 100 142
0 227 100 143
0 227 100 147

SAAB
89 80 534

SEAT
191 905 351 B

TELEFUNKEN
339 373

VW
191 905 351 A
191 905 351 B

00 **Eliminated on 28-06-2021. Please verify the availability through our local distributors**

- Eliminato il 28-06-2021. Verificare la disponibilità presso i nostri distributori
- Eliminé le 28-06-2021. Verifier la disponibilité auprès de nos distributeurs sur place
- Am 28-06-2021 gestrichen. Evtl. Verfügbarkeit bitte bei unseren Händlern prüfen
- Eliminado en fecha 28-06-2021. Verificar la disponibilidad a través de nuestros distribuidores locales

HALL TYPE MODULE

AUDI		
80 II 1.3	EP	09/78 ⇨ 07/86
80 II 1.6	DT, JU, SA	08/78 ⇨ 03/87
80 II 1.8	DS, JN, SF	01/83 ⇨ 08/86
80 II 1.8 CC quattro	JN, JV	08/84 ⇨ 08/86
80 II 1.8 GTE	DZ, MU, PV	06/84 ⇨ 03/87
80 II 2.0	HP, JS	10/83 ⇨ 09/84
80 II 2.0 quattro	JS	10/83 ⇨ 09/84
80 III 1.4	SE	08/86 ⇨ 07/88
80 III 1.6	ABB, PP, RN, RNA	09/86 ⇨ 10/91
80 III 1.8	RU, SD	09/86 ⇨ 01/90
80 III 1.8 E	DZ	06/86 ⇨ 08/91
80 III 1.8 S	JN, JV, NE, PM, SF	08/86 ⇨ 10/91
80 III 2.0	AAD	10/90 ⇨ 08/91
80 III 2.0 E	3A	08/88 ⇨ 10/90
80 III 2.0 E 16V	6A	03/90 ⇨ 09/91
80 IV 1.6	ABB	03/92 ⇨ 05/93
90 I 1.8	JN	06/84 ⇨ 03/87
90 I 2.0	HP, JL, JS, SK	10/84 ⇨ 03/87
90 I 2.0 quattro	JS	08/84 ⇨ 08/86
90 I 2.2	9C54, HY, KX	10/84 ⇨ 03/87
90 I 2.2 E quattro	9C54	11/84 ⇨ 03/87
90 II 2.0	PS	07/88 ⇨ 09/91
90 II 2.0 20 V	NM	08/89 ⇨ 07/91
90 II 2.2 E	9C54	04/87 ⇨ 07/91
90 II 2.3 E	NG	04/87 ⇨ 09/91
90 II 2.3 E 20V	7A	08/88 ⇨ 07/91
100 III 1.8	DS, JW, NP, SH	08/83 ⇨ 12/90
100 III 1.8 Cat	4B, PH	03/85 ⇨ 11/90
100 III 1.8 Cat quattro	4B	08/85 ⇨ 11/90
100 III 1.8 quattro	NP, SH	10/84 ⇨ 07/90
100 III 2.0	KP	08/84 ⇨ 12/87
100 III 2.0 E	KP	01/85 ⇨ 12/87
100 III 2.2 Cat	KU	06/89 ⇨ 11/90
100 III 2.2 Cat quattro	KU	06/89 ⇨ 11/90
100 IV 1.6	ABB	03/92 ⇨ 07/93
COUPE 1.8	DZ	08/89 ⇨ 07/91
COUPE 2.2	9C54	11/88 ⇨ 07/91
COUPE 2.2 GT	9C54	09/84 ⇨ 10/88
COUPE 2.2 quattro	9C54, JT	10/84 ⇨ 07/91
SAAB		
900 I 2.0 -16	5B6304GS	01/89 ⇨ 06/94
900 I 2.0 i	0TLE4G15, B201XI	11/80 ⇨ 08/90
900 I 2.0 S Turbo-16	B202S	07/91 ⇨ 06/94
900 I 2.0 Turbo	B201XL	01/86 ⇨ 12/91
900 I 2.0 Turbo-16	B202L, B202XL	11/85 ⇨ 06/94
900 I 2.0 Turbo-16 S	B202XL	01/84 ⇨ 06/94
900 I 2.0 Turbo-16 S Cat	B202XL	01/89 ⇨ 12/93
SEAT		
TOLEDO I 1.6 i	1F	05/91 ⇨ 03/99
TOLEDO I 1.8 16V	PL	05/91 ⇨ 03/99
TOLEDO I 1.8 i	RP	05/91 ⇨ 12/96
VW		
POLO II 1.0	AAK, HZ	01/85 ⇨ 09/94
POLO II 1.0 Cat	AAK	08/89 ⇨ 09/94
POLO II 1.3	3F, MH	08/83 ⇨ 09/94
POLO II 1.3 Cat	2G, 3F, MH, NZ	07/87 ⇨ 09/94
POLO II 1.3 G40	PY	01/87 ⇨ 08/90
JETTA II 1.0	HZ	08/85 ⇨ 10/91
JETTA II 1.3	MH	01/84 ⇨ 06/87
JETTA II 1.3 Cat	2G, MH, NZ	06/87 ⇨ 12/91
JETTA II 1.6	ABN, EZ, EZA, HM, PN, RF	12/83 ⇨ 07/92
JETTA II 1.8	EV, GU, GX, PB, RD, RH, RV	01/84 ⇨ 10/91
JETTA II 1.8 16V	KR, PL	08/86 ⇨ 10/91
JETTA II 1.8 Cat	GX, PF, RP	01/87 ⇨ 10/91
JETTA II 1.8 G60	PG	04/90 ⇨ 07/91
JETTA II 1.8 Syncro	3E82, GU, GX, RH, RP	08/85 ⇨ 07/91
JETTA II 1.8i GT	GZ	12/83 ⇨ 07/88
CADDY I 1.8	JH	08/85 ⇨ 07/92
CORRADO 1.8 16V	KR	04/89 ⇨ 07/92
CORRADO 1.8 G60	PG	09/88 ⇨ 09/93
CORRADO 2.0 i	ADY	04/93 ⇨ 12/95
CORRADO 2.0 i 16V	7TZ220XS560	08/91 ⇨ 12/95
CORRADO 2.9 VR6	ABV	08/91 ⇨ 12/95
GOLF I 1.6	EW, HN	08/83 ⇨ 04/92
GOLF I 1.8	2H, DX, EX, JH, KT	08/82 ⇨ 04/93
GOLF II 1.0	HZ	08/85 ⇨ 10/91
GOLF II 1.3	MH	08/83 ⇨ 06/87
GOLF II 1.3 Cat	2G, NZ	06/86 ⇨ 12/92
GOLF II 1.6	ABN, EZ, PN, RF	08/83 ⇨ 12/92
GOLF II 1.6 [CHE] [SWE]	HM	08/83 ⇨ 07/88
GOLF II 1.6 G	EZA, PN	08/86 ⇨ 07/91
GOLF II 1.8	GU, GX, RH, RV	08/84 ⇨ 10/91
GOLF II 1.8 [CHE] [SWE]	HV	04/84 ⇨ 07/87
GOLF II 1.8 GTI	EV, PB, RD	08/83 ⇨ 10/91
GOLF II 1.8 GTI 16V	KR, PL	02/86 ⇨ 10/91
GOLF II 1.8 GTI Cat	PF	01/87 ⇨ 10/91
GOLF II 1.8 GTI G60	PG	04/90 ⇨ 07/91
GOLF II 1.8 GTI G60 Syncro	1H, PG	08/88 ⇨ 12/91
GOLF II 1.8 i	RP	08/87 ⇨ 07/91
GOLF II 1.8 i Cat	GX, RP	08/87 ⇨ 10/91
GOLF II 1.8 i Cat Syncro	RP	08/87 ⇨ 10/91
GOLF II 1.8 Rallye syncro	1H, PG	08/88 ⇨ 07/91
GOLF II 1.8 Syncro	3E82, GU, GX, RH	02/86 ⇨ 07/91
GOLF II 1.8i GTI [CHE] [SWE]	GZ	01/84 ⇨ 07/87
VW		
GOLF II 1.8i GTI [SWE]	GZ	08/87 ⇨ 07/88
PASSAT III 1.6	1F, EZ	04/88 ⇨ 07/92
PASSAT III 1.8	KR, PB, PF	04/88 ⇨ 09/93
PASSAT III 1.8 16V	KR	04/88 ⇨ 12/89
PASSAT III 1.8 GL	KR	08/91 ⇨ 09/93
SCIROCCO II 1.6	EW, HN	01/83 ⇨ 12/89
SCIROCCO II 1.8	DX, EX, JH, KT	08/82 ⇨ 07/92
SCIROCCO II 1.8 16V	KR, PL	10/85 ⇨ 07/92
TRANSPORTER III 1.9	DF, DG	08/82 ⇨ 07/92
TRANSPORTER III 1.9 Syncro	DG	11/84 ⇨ 07/92
TRANSPORTER III 2.1	DJ, MV, SR	08/84 ⇨ 07/92
TRANSPORTER III 2.1 Cat	MV	06/89 ⇨ 07/92
TRANSPORTER III 2.1 i	SS	07/89 ⇨ 07/92
TRANSPORTER III 2.1 Syncro	DJ, MV, SR	08/85 ⇨ 07/92

FACET **9.4020** 3,5

IGNITION MODULES

Adatt./Suitable:

FIAT
9940095

INNOCENTI
9940095

LANCIA
9940095

MAGNETI MARELLI
064833040010
581701070000
648 330 40
BKL 4 A

PIAGGIO
498327

FIAT		
DUNA 60 1.1	146A6.000	01/87 ⇨ 12/91
DUNA 70 1.3	146A5.000	01/87 ⇨ 12/91
ELBA 1.3	146A5.000	04/91 ⇨ 02/95
FIORINO I 1.1 60	146A9.000	11/86 ⇨ 04/88
FIORINO I 1.3	146A5.000	12/87 ⇨ 08/93
FIORINO II 1.0 iE	156A2.246	11/92 ⇨ 04/96
FIORINO II 1.3	146A5.000	01/88 ⇨ 12/94
FIORINO II 60 1.1	146A9.000	05/88 ⇨ 12/93
FIORINO II 70 1.3	146A5.000	01/88 ⇨ 12/94
PALIO 1.1	178B9.033	07/97 ⇨ 10/03
PANDA I 1.1	156C.046	05/91 ⇨ 03/95
PANDA I 1000	156A2.100, 156A3.000	01/85 ⇨ 12/92
PANDA I 1000 4x4	156A2.100, 156A2.246, 156A3.000	01/86 ⇨ 12/94
PANDA I 1000 Fire [CHE]	156A2.146	11/87 ⇨ 04/91
PANDA I 1000 Fire [DEU]	156A2.048	01/86 ⇨ 07/89
PANDA I 1000 i.e	156A2.246	08/92 ⇨ 02/04
PANDA I 1000 i.e. Cat	156A2.246	10/87 ⇨ 08/98
PANDA I 1100 i.e.	156C.046	01/86 ⇨ 04/91
PANDA I 1100 Trekking 4x4	156C.046	10/91 ⇨ 07/04
PANDA I 750 Cat	156A4.048	01/95 ⇨ 10/03
PANDA I 750 Fire	156A4.048	11/88 ⇨ 04/91
REGATA 70 1.3	138B2.000, 149A3.000	09/83 ⇨ 07/89
RITMO I 1.3	149A3.000	11/83 ⇨ 08/85
TEMPRA 1.4 i.e.	159A2.000	04/90 ⇨ 08/96
TIPO I 1.1	160A3.000	01/88 ⇨ 10/91
TIPO I 1.4	160A1.000	07/87 ⇨ 12/89
TIPO I 1.4 i.e.	159A2.000	05/89 ⇨ 04/95
UNO 1.0	146A2.166	11/94 ⇨ 08/00
UNO 45 1.0	156A2.000, 156A2.100	06/86 ⇨ 12/93
UNO 45 1.0 Fire	--	01/83 ⇨ 12/89
UNO 45 i.e. 1.0	156A2.246	10/84 ⇨ 10/95
UNO 50 1.1	156C.046	01/90 ⇨ 12/93
UNO 50 i.e. 1.1	146C3.000	06/92 ⇨ 12/93
UNO 60 1.1	146A4.048, 146A6.000, 160A3.000	02/88 ⇨ 12/92
UNO 60 1.1 SX	--	01/85 ⇨ 12/89
UNO CS 1.1	146A6.000	09/87 ⇨ 09/91
UNO Mondo 1.0	146A2.166	01/98 ⇨
UNO Mondo 1.0 [IND]	146A2.166	01/98 ⇨
FIAT (BR)		
UNO CS 1116	--	01/88 ⇨

INNOCENTI		
ELBA 1.3	146A5.000	08/91 ⇨ 12/96
LANCIA		
DELTA I 1.1	831B8.000	01/86 ⇨ 12/90
DELTA I 1.3	1831B.000, 3831B.000, 831A2.000, 831B.000	09/79 ⇨ 10/92
PRISMA 1.3	831A2.000	01/83 ⇨ 12/89
Y10 1.0 Fire	156A2.100	06/85 ⇨ 06/91
Y10 1.0 Fire Catalytic-Conv	156A2.246	10/87 ⇨ 02/92
Y10 1.0 Fire Trazione integrale	156A2.000, 156A2.100, 156A2.246	12/86 ⇨ 02/92
Y10 1.1 i.e Fire	156C.000	08/89 ⇨ 06/92
Y10 1.1 i.e Fire Trazione integrale	156C.000	08/89 ⇨ 06/92
Y10 1.1 i.e. Fire	156C.046	07/89 ⇨ 09/95

FACET 9.4025

3

IGNITION MODULES

Adatt./Suitable:

DELCO REMY
1 601 0892
1 977 958
1 979 107
D-1957
D-1958
D-1961

GENERAL MOTORS
1 977 958
1 979 107
1 979 571
1 985 342
10 482 824
16 140 049
16 158 829

ISUZU
8-01979571-0
8-16140049-0

OPEL
12 11 582
12 11 591
12 37 504
62 37 753

[03] **Supplied until depletion**
- Fornibile fino ad esaurimento delle scorte
- Fourni jusqu'à épuisement du stock
- Lieferbar solange vorrat reicht
- Suministrado hasta el stock termina

[1114] **Supplied with heat conducting silicone grease capsule**
- Fornito con capsula di grasso termico al silicone
- Fourni avec capsule contenant graisse termique au silicone
- Geliefert mit Thermo-Silikonfettkapsel
- Suministrado con capsula de grasa termica de silicona

ISUZU		
PICK-UP 3.1i V6 [USA]	LG6	01/90 ⇨
RODEO 3.1i V6 [USA]	LG6	01/90 ⇨ 12/92
TROOPER 3.2i V6 [USA]	--	01/88 ⇨ 12/91
OPEL		
ASCONA C 1.6 i Cat	C16LZ, C16NZ	09/86 ⇨ 08/88
ASTRA F 1.6 i	C16NZ	09/91 ⇨ 09/98
CORSA A 1.3	C13N	09/85 ⇨ 10/87
CORSA A 1.3 i	C13N	09/86 ⇨ 09/90
KADETT E 1.3 i Cat	C13N	09/85 ⇨ 08/91
KADETT E 1.6 i	C16NZ	09/86 ⇨ 07/94
KADETT E 1.6 i Cat	C16LZ, C16NZ	09/86 ⇨ 02/93
VECTRA A 1.6 i	C16NZ, E16NZ, X16SZ	09/88 ⇨ 11/95
VECTRA A 1.6 i Cat	C16NZ	09/88 ⇨ 11/95
VAUXHALL		
ASTRA III 1.6 i	C16NZ	09/91 ⇨ 12/98
ASTRAVAN I 1.6 i	C16NZ	10/91 ⇨ 08/98

FACET 9.4029

3,5

IGNITION MODULES

Adatt./Suitable:

DUCELLIER
2 528 001 A
7 350 260 2

FIAT
9942040

LANCIA
9942040

[03] **Supplied until depletion**
- Fornibile fino ad esaurimento delle scorte
- Fourni jusqu'à épuisement du stock
- Lieferbar solange vorrat reicht
- Suministrado hasta el stock termina

[1114] **Supplied with heat conducting silicone grease capsule**
- Fornito con capsula di grasso termico al silicone
- Fourni avec capsule contenant graisse termique au silicone
- Geliefert mit Thermo-Silikonfettkapsel
- Suministrado con capsula de grasa termica de silicona

FIAT		
PANDA I 750 Cat	156A4.048	01/95 ⇨ 10/03
PANDA I 750 Fire	156A4.048	11/88 ⇨ 04/91
TIPO I 1.1	160A3.000	01/88 ⇨ 10/91
UNO 45 1.0	156A2.000, 156A2.100	06/86 ⇨ 12/93
UNO 45 1.0 Fire	--	01/83 ⇨ 12/89
UNO 60 1.1	160A3.000	04/89 ⇨ 12/92
LANCIA		
Y10 1.0 Fire Trazione integrale	156A2.000	12/87 ⇨ 02/90
Y10 1.1 i.e Fire	156C.000	08/89 ⇨ 06/92
Y10 1.1 i.e Fire Trazione integrale	156C.000	08/89 ⇨ 06/92

FACET 9.4034

3,5

IGNITION MODULES

Adatt./Suitable:

BOSCH
0 227 100 124
1 227 010 003
1 227 010 039

CITROËN
5945 51
96 048 070

GENERAL MOTORS
90 006 499

IVECO
7612955

OPEL
12 08 243

PEUGEOT
5945 51

PORSCHE
928 602 706 01

SAAB
40 23 149
59 60 059
75 03 600

SCANIA
4023149
5960059

VOLVO
1332584
13325840

[03] **Supplied until depletion**
- Fornibile fino ad esaurimento delle scorte
- Fourni jusqu'à épuisement du stock
- Lieferbar solange vorrat reicht
- Suministrado hasta el stock termina

[1114] **Supplied with heat conducting silicone grease capsule**
- Fornito con capsula di grasso termico al silicone
- Fourni avec capsule contenant graisse termique au silicone
- Geliefert mit Thermo-Silikonfettkapsel
- Suministrado con capsula de grasa termica de silicona

CITROËN		
XM I 3.0	UFZ(ZPJ/Z)	05/89 ⇨ 05/94
XM I 3.0 V6	SFZ(ZPJ/Z), UFZ(ZPJ/Z)	05/89 ⇨ 06/94
XM I 3.0 V6 24V	SKZ(ZPJ4/Z), UKZ(ZPJ4/Z)	07/90 ⇨ 06/94

CITROËN		
XM II 3.0 V6	SFZ(ZPJ/Z), UFZ(ZPJ/Z)	05/94 ⇨ 10/00
XM II 3.0 V6 24V	SKZ(ZPJ4/Z), UKZ(ZPJ4/Z)	05/94 ⇨ 10/00
OPEL		
KADETT E 1.6 S	16S	09/84 ⇨ 08/86
KADETT E 1.8	18SE	01/86 ⇨ 08/91
KADETT E 1.8 GSI	18E	09/84 ⇨ 08/86
KADETT E 1.8 i	18E	09/84 ⇨ 08/86
OMEGA A 3.0	30NE	03/87 ⇨ 09/90
PEUGEOT		
605 3.0	UFZ(ZPJ), UKZ(ZPJ4/Z)	08/89 ⇨ 09/99
605 3.0 SV 24	UKZ(ZPJ4/Z)	08/89 ⇨ 09/99
PORSCHE		
911 II 3.6 Carrera	M64.01, M64.02	12/88 ⇨ 05/94
911 II 3.6 Carrera 4	M64.01	12/88 ⇨ 05/94
911 II 3.6 Carrera RS	M64.03	06/91 ⇨ 09/93
928 5.4 GTS	M28.49, M28.50	08/91 ⇨ 11/95
SAAB		
900 I 2.0 -16	5B6304GS	01/89 ⇨ 06/94
9000 2.0 -16	5B6304GS, B202XI	12/85 ⇨ 01/93
9000 2.0 -16 CS	5B6304GS	01/89 ⇨ 12/98
9000 2.3 -16 CD	B234I	08/89 ⇨ 12/98
9000 2.3 -16 CS	B234I	09/89 ⇨ 12/98

FACET 9.4036

3,5

IGNITION MODULES

Adatt./Suitable:

GENERAL MOTORS
90 243 618 *J
90 360 314 *J
90 360 315 *J

HOLDEN
90243618 *J

OPEL
12 37 334 *J
12 37 464 *J

[*J] **Supplied module only, without bracket**
- Fornito solo il modulo, no la flangia
- Fourni le module seul, sans bride
- Geliefert nur das Modul, ohne Montageflansch
- Suminístrase solo el módulo, sin base de montaje

[03] **Supplied until depletion**
- Fornibile fino ad esaurimento delle scorte
- Fourni jusqu'à épuisement du stock
- Lieferbar solange vorrat reicht
- Suministrado hasta el stock termina

[1114] **Supplied with heat conducting silicone grease capsule**
- Fornito con capsula di grasso termico al silicone
- Fourni avec capsule contenant graisse termique au silicone
- Geliefert mit Thermo-Silikonfettkapsel
- Suministrado con capsula de grasa termica de silicona

HOLDEN		
BARINA 1.4 i	C14NZ	04/94 ⇨ 07/97
BARINA_SB 1.2i	C12NZ	04/94 ⇨ 07/97
COMBO 1.4 i	C14NZ	03/96 ⇨ 07/97
COMBO_SB 1.4i	C14NZ	04/94 ⇨ 07/97
OPEL		
ASTRA F 1.4	14SE	09/92 ⇨ 09/98
ASTRA F 1.4 i	C14NZ	09/91 ⇨ 01/05
ASTRA F 1.4 Si	C14SE	03/92 ⇨ 03/01
ASTRA F 1.6	16LZ2, 16NZ2	09/94 ⇨ 09/98
ASTRA F 1.8 i	C18NZ	09/91 ⇨ 09/98
COMBO B 1.2	C12NZ	07/94 ⇨ 10/01
COMBO B 1.4	C14NZ	07/94 ⇨ 10/01
CORSA A 1.2 i	C12NZ	09/89 ⇨ 03/93
CORSA A 1.4 i	C14NZ	01/85 ⇨ 03/93
CORSA A 1.4 Si	C14SE	09/91 ⇨ 03/93
CORSA A 1.6 GSI	E16SE	05/88 ⇨ 03/92
CORSA B 1.2 i	12NZ, C12NZ	03/93 ⇨ 09/00
CORSA B 1.4 i	C14NZ	03/93 ⇨ 09/00
KADETT E 1.4 i	C14NZ	01/90 ⇨ 07/94
KADETT E 1.6	16SV	09/86 ⇨ 12/91
KADETT E 1.6 i	16SV	07/89 ⇨ 02/93
KADETT E 1.6 S	16SV	09/86 ⇨ 08/91

OPEL		
OMEGA A 1.8 S	18SV	09/86 ⇨ 03/94
VECTRA A 1.6	16SV, C16LZ2	09/88 ⇨ 07/93
VECTRA A 1.6 i	C16NZ2	09/88 ⇨ 11/95
VECTRA A 1.6 i Cat	C16NZ2	09/88 ⇨ 11/95
VECTRA A 1.6 S	16SV	09/88 ⇨ 05/93
VECTRA A 1.8 i	18SV	09/88 ⇨ 10/90
VECTRA A 1.8 i Cat	C18NZ	03/90 ⇨ 11/95
VECTRA A 1.8 S	18SV	09/89 ⇨ 10/90
VECTRA B 1.6 i	16LZ2	10/95 ⇨ 07/03
VAUXHALL		
ASTRA III 1.4 i	C14NZ, C14SE	03/91 ⇨ 09/98
ASTRA III 1.8 i	C18NZ	09/91 ⇨ 09/98
ASTRAVAN I 1.4 i	C14NZ	09/91 ⇨ 08/95
COMBO B 1.2	C12NZ	07/94 ⇨ 10/01
COMBO B 1.4	C14NZ	07/94 ⇨ 10/01
CORSA B 1.2 i	C12NZ	03/93 ⇨ 09/00
CORSA B 1.4 i	C14NZ	03/93 ⇨ 09/00
CORSAVAN I 1.4 i	C14NZ	01/94 ⇨ 09/00

FACET 9.4051

3,5

IGNITION MODULES

Adatt./Suitable:

AUDI
4A0 905 351
HITACHI
DIS4-05
VW
4A0 905 351

[03] **Supplied until depletion**
- Fornibile fino ad esaurimento delle scorte
- Fourni jusqu'à épuisement du stock
- Lieferbar solange vorrat reicht
- Suministrado hasta el stock termina

[1114] **Supplied with heat conducting silicone grease capsule**
- Fornito con capsula di grasso termico al silicone
- Fourni avec capsule contenant graisse termique au silicone
- Geliefert mit Thermo-Silikonfettkapsel
- Suministrado con capsula de grasa termica de silicona

AUDI		
80 IV 2.6	ABC	07/92 ⇨ 01/96
80 IV 2.6 E	ACZ	05/93 ⇨ 05/95
80 IV 2.6 E quattro	ACZ	11/93 ⇨ 05/95
80 IV 2.6 quattro	ABC, ACZ	06/92 ⇨ 01/96
80 IV 2.8	AAH	09/91 ⇨ 01/96
80 IV 2.8 quattro	AAH	09/91 ⇨ 07/95
100 IV 2.6	ABC, ACZ	03/92 ⇨ 07/94
100 IV 2.6 E quattro	ACZ	08/93 ⇨ 07/94
100 IV 2.6 quattro	ABC	04/92 ⇨ 07/94
100 IV 2.8 E	AAH	12/90 ⇨ 07/94
100 IV 2.8 E quattro	AAH	12/90 ⇨ 07/94
A6 I 2.4	AFM	07/95 ⇨ 12/97
A6 I 2.6	ABC, ACZ	06/94 ⇨ 12/97
A6 I 2.6 quattro	ABC, ACZ	06/94 ⇨ 12/97
A6 I 2.8	AAH, AEJ	06/94 ⇨ 12/97
A6 I 2.8 quattro	AAH, AEJ	06/94 ⇨ 12/97
A4 I 2.4	AFM	07/95 ⇨ 07/97
A4 I 2.6	ABC	01/95 ⇨ 09/01
A4 I 2.6 quattro	ABC	01/95 ⇨ 09/01
A4 I 2.8	AAH	09/95 ⇨ 07/97
A4 I 2.8 quattro	AAH	01/95 ⇨ 07/97
A8 I 2.8	AAH, AEJ	03/94 ⇨ 03/96
A8 I 2.8 quattro	AAH, AEJ	03/94 ⇨ 03/96
CABRIOLET 2.6	ABC, ACZ	06/93 ⇨ 08/00
CABRIOLET 2.8	AAH	11/92 ⇨ 08/00
COUPE 2.6	ABC	08/92 ⇨ 12/96
COUPE 2.6 quattro	ABC	08/92 ⇨ 12/96
COUPE 2.8	AAH	09/91 ⇨ 12/96
COUPE 2.8 quattro	AAH	08/91 ⇨ 12/96

FACET 9.4052

3,5

IGNITION MODULES

Adatt./Suitable:

ACURA
06302-PT2-000
06302-PT2-A00
HONDA
06302-PT2-000
06302-PT2-A00
06302-PT3-000
06302-PT3-A00
06302-PT-A00
30120-PM-A01
30120-PR3-003
30120-PT2-004
30120-PT3-003
30120-PT3-004
30130-P54-006
30130-PR3-006
30130-PT2-006
ROVER
NJL100030
NJL100040
NJW100030

ACURA		
INTEGRA I 1.6	D16A1	01/85 ⇨ 12/90
INTEGRA I 1.6 i	D16A8	01/85 ⇨ 12/90
INTEGRA II 1.8	F18A2	10/90 ⇨ 09/93
HONDA		
ACCORD IV 2.0 16V	F20A5	01/90 ⇨ 12/93
ACCORD IV 2.0 i 16V	F20A4, F20A7, F20A8, F20Z3	01/90 ⇨ 12/93
ACCORD IV 2.2	F22A6	05/92 ⇨ 12/93
ACCORD IV 2.2 i 16V	F22A3, F22A7, F22A8	01/90 ⇨ 12/93
ACCORD IV 2.2 i 16V Automatik	F22A3	01/90 ⇨ 03/93
ACCORD V 2.0	F20B3	09/93 ⇨ 12/97
ACCORD V 2.0 i	F20Z2	03/93 ⇨ 01/96
ACCORD V 2.0 i LS 16V	F20B3	09/93 ⇨ 02/98
ACCORD V 2.0 i S	F20Z1	03/93 ⇨ 01/96
ACCORD V 2.2 i [USA]	--	01/94 ⇨ 12/95
ACCORD V 2.2 i 16V	F22B4	08/95 ⇨ 12/97
ACCORD V 2.2 i ES	F22B5	09/93 ⇨ 02/98
CIVIC V 1.5	D15B2	01/92 ⇨ 12/92
CIVIC V 1.5 i 16V	D15B2, D15Z1	10/91 ⇨ 11/95
CIVIC V 1.6 16V Vtec	D16Z6, D16Z7	10/91 ⇨ 11/95
CIVIC V 1.6 4x4	D16Z7	01/92 ⇨ 10/95
CIVIC V 1.6 i Vtec	B16A2	01/94 ⇨ 11/95
CIVIC V 1.6 VTi	B16A2	10/91 ⇨ 11/95
CIVIC V 1.6 VTi 16V	B16A2	10/91 ⇨ 11/95
CIVIC IV 1.5	D15B1	01/88 ⇨ 12/89
CIVIC IV 1.5 i 16V	D15B2	10/87 ⇨ 09/91
CIVIC IV 1.6 16V 4x4	D16A6	11/87 ⇨ 09/91
CIVIC IV 1.6 i 16V	D16A6, D16A9, D16Z2	09/87 ⇨ 09/91
CIVIC IV 1.6 i 16V 4x4	D16A6, D16Z2	01/89 ⇨ 12/91
CIVIC IV 1.6i	--	01/90 ⇨ 12/91
CIVIC IV 1.6i 16V	D16A1, D16A7, D16A8, D16A9	01/88 ⇨ 05/92
CIVIC IV 1.6i 16V 4WD	D16A1, D16Z2	01/88 ⇨ 12/91
CIVIC IV SHUTTLE 1.5 i 16V	D15B2	01/88 ⇨ 11/91
CIVIC IV SHUTTLE 1.6 4x4	D16A, D16A7	01/88 ⇨ 12/92
CIVIC IV SHUTTLE 1.6 i 16V 4WD	D16A6	01/88 ⇨ 02/95
CIVIC IV SHUTTLE 1.6i	--	01/88 ⇨ 12/91
CIVIC IV SHUTTLE 1.6i 16V 4WD	D16Z2	01/88 ⇨ 12/92
CONCERTO 1.5 i 16V	D15B2	08/89 ⇨ 05/95
CONCERTO 1.6 16V	D16Z2	08/89 ⇨ 03/95
CONCERTO 1.6 i 16V	D16A8, D16Z2	08/89 ⇨ 03/95
CONCERTO 1.6i DOHC	--	01/90 ⇨ 12/91
CRX II 1.6 i 16V	D16A9, D16Z5	10/87 ⇨ 02/92
CRX II 1.6 i 16V Vtec	B16A1	10/89 ⇨ 02/92
CRX III 1.6 ESi	D16Y8, D16Z6	03/92 ⇨ 12/98
CRX III 1.6 i VTi	B16A2	03/92 ⇨ 12/98
PRELUDE IV 2.0 i 16V	F20A4	02/92 ⇨ 09/96
PRELUDE IV 2.2 i 16V Vtec	H22A2	02/93 ⇨ 09/96
PRELUDE IV 2.3 i 16V	H23A2	02/92 ⇨ 09/96
ROVER		
200 II 216	D16A8	10/92 ⇨ 06/99

ROVER		
200 II 216 1.6i	D16A8	01/92 ⇨ 11/99
200 II 216 GSi	1GH5E-180	01/90 ⇨ 12/95
200 II 216 GTi	D16A8	01/90 ⇨ 10/95
600 618 i/Si	F18A3	03/96 ⇨ 02/99
600 620 i	F20Z2	08/93 ⇨ 06/96
600 620 Si	F20Z1	08/93 ⇨ 02/99
600 623 Si	H23A3	08/93 ⇨ 06/99
400 I 416 GSI	1GH5E-180	04/90 ⇨ 04/95
400 I 416 GSI/GSE	D16A7	04/90 ⇨ 04/95
400 I 416 GTI	D16A8	04/90 ⇨ 04/95

FACET 9.4072

3,5

IGNITION MODULES

Adatt./Suitable:

AUDI
8D0 905 351
HITACHI
DIS4-08
VW
8D0 905 351

[03] **Supplied until depletion**
- Fornibile fino ad esaurimento delle scorte
- Fourni jusqu'à épuisement du stock
- Lieferbar solange vorrat reicht
- Suministrado hasta el stock termina

[1114] **Supplied with heat conducting silicone grease capsule**
- Fornito con capsula di grasso termico al silicone
- Fourni avec capsule contenant graisse termique au silicone
- Geliefert mit Thermo-Silikonfettkapsel
- Suministrado con capsula de grasa termica de silicona

AUDI		
A4 I 1.8 T	1HN9, AJL, ANB, APU, ARK	01/95 ⇨ 09/01
A4 I 1.8 T quattro	1HN9, AJL, ANB, APU, ARK	01/95 ⇨ 09/01
A6 II 1.8 T	1HN9, AJL, ANB, APU, ARK	01/97 ⇨ 01/05
A6 II 1.8 T quattro	1HN9, AJL, ANB, APU, ARK	02/97 ⇨ 01/05
VW		
PASSAT IV 1.8 T	AEB, ANB, APU	10/96 ⇨ 11/00
PASSAT IV 1.8 T Syncro	AEB	11/96 ⇨ 08/00

FACET 9.4073

3

IGNITION MODULES

Adatt./Suitable:

MAZDA
B541-18-V20 *J

MITSUBISHI
J170

00 Eliminated on 04-05-2020. Please verify the availability through our local distributors
- Eliminato il 04-05-2020. Verificare la disponibilità presso i nostri distributori
- Eliminé le 04-05-2020. Verifier la disponibilité auprès de nos distributeurs sur place
- Am 04-05-2020 gestrichen. Evtl. Verfügbarkeit bitte bei unseren Händlern prüfen
- Eliminado en fecha 04-05-2020. Verificar la disponibilidad a través de nuestros distribuidores locales

***J Supplied module only, without bracket**
- Fornito solo il modulo, no la flangia
- Fourni le module seul, sans bride
- Geliefert nur das Modul, ohne Montageflansch
- Suminístrase solo el módulo, sin base de montaje

1114 Supplied with heat conducting silicone grease capsule
- Fornito con capsula di grasso termico al silicone
- Fourni avec capsule contenant graisse termique au silicone
- Geliefert mit Thermo-Silikonfettkapsel
- Suministrado con capsula de grasa termica de silicona

MAZDA		
121 I 1.1	B115, B116	10/87 ⇨ 01/91
121 I 1.1 Unleaded Fuel	--	01/87 ⇨ 12/91
121 I 1.3	B3	04/89 ⇨ 10/90
121 I 1.3 Leaded Fuel	--	01/87 ⇨ 12/91
121 II 1.1	B1	11/90 ⇨ 10/93
323 III 1.5	B505, B535, B536	09/89 ⇨ 09/93
323 VI C 1.6	B6E	09/89 ⇨ 06/91
323 VI C 1.6 16V	B6	03/91 ⇨ 10/94
323 VI F 1.6	B6E	09/89 ⇨ 06/91
323 VI F 1.6 16V	B6	03/91 ⇨ 10/94
323 VI S 1.3	B383, B3E	09/89 ⇨ 06/91
323 VI S 1.3 16V	B3(16V)	04/91 ⇨ 07/94
323 VI S 1.6	B6E	09/89 ⇨ 06/91
323 VI S 1.6 16V	B6	08/89 ⇨ 10/96
323 VI 1.3 16V	B384, B386, B387	06/89 ⇨ 03/91

FACET 9.4074

07

IGNITION MODULES

Adatt./Suitable:

SEAT
071 905 143

TELEFUNKEN
311886

VW
071 905 143

03 Supplied until depletion
- Fornibile fino ad esaurimento delle scorte
- Fourni jusqu'à épuisement du stock
- Lieferbar solange vorrat reicht
- Suministrado hasta el stock termina

SEAT		
LEON I 2.3 V5	AGZ	10/98 ⇨ 11/00
TOLEDO II 2.3 V5	AGZ	10/98 ⇨ 11/00
VW		
PASSAT IV 2.3 VR5	AGZ	10/96 ⇨ 11/00
PASSAT IV 2.3 VR5 Syncro/4motion	AGZ	10/97 ⇨ 11/00
BORA 2.3 V5	AGZ	10/98 ⇨ 10/00
BORA 2.3 V5 4motion	AGZ	12/98 ⇨ 10/00
GOLF IV 2.3 V5	AGZ	08/97 ⇨ 06/06
GOLF IV 2.3 V5 4motion	AGZ	12/98 ⇨ 06/06

FACET 9.4076

3,5

IGNITION MODULES

Adatt./Suitable:

AUDI
4D0 905 351

BOSCH
0 227 100 030
0 227 100 211
0 227 100 212

SEAT
4D0 905 351

SKODA
4D0 905 351

VW
4D0 905 351

03 Supplied until depletion
- Fornibile fino ad esaurimento delle scorte
- Fourni jusqu'à épuisement du stock
- Lieferbar solange vorrat reicht
- Suministrado hasta el stock termina

1114 Supplied with heat conducting silicone grease capsule
- Fornito con capsula di grasso termico al silicone
- Fourni avec capsule contenant graisse termique au silicone
- Geliefert mit Thermo-Silikonfettkapsel
- Suministrado con capsula de grasa termica de silicona

AUDI		
A3 I 1.8 T	AGU	12/96 ⇨ 05/03
A3 I 1.8 T quattro	AGU	12/96 ⇨ 05/03
A4 II 1.8 T	AVJ	11/00 ⇨ 07/02
A4 II 1.8 T quattro	AVJ	11/00 ⇨ 07/02
A6 I S6 Plus quattro	AHK	04/96 ⇨ 12/97
A4 I 1.8 T	1HN9	01/95 ⇨ 09/01
A4 I 1.8 T quattro	1HN9	01/95 ⇨ 09/01
A6 II 1.8 T	1HN9	01/97 ⇨ 01/05
A6 II 1.8 T quattro	1HN9	02/97 ⇨ 01/05
A8 I 3.7	AEW, AKJ	07/95 ⇨ 12/98
A8 I 3.7 quattro	AEW, AKJ	07/95 ⇨ 11/98
A8 I 4.2 quattro	ABZ, AEM, AGH, AKG	03/94 ⇨ 11/98
A8 I S8 quattro	2C2CNG, AKH	07/96 ⇨ 06/99
SEAT		
ALHAMBRA I / II 1.8 T 20V	AJH	10/97 ⇨ 03/10
LEON I 1.8 20V T	APP	11/99 ⇨ 06/06
SKODA		
OCTAVIA I 1.8 T	AGU, ARX, AUM	08/97 ⇨ 12/10
OCTAVIA I 1.8 T 4x4	ARX	05/01 ⇨ 05/06
OCTAVIA I RS 1.8 T	AUQ	05/01 ⇨ 01/06
VW		
PASSAT IV 1.8 T	AEB	10/96 ⇨ 11/00
PASSAT IV 1.8 T Syncro	AEB	11/96 ⇨ 08/00
BORA 1.8 T	AGU	05/00 ⇨ 05/05
GOLF IV 1.8 T	AGU	08/97 ⇨ 06/06
NEW BEETLE 1.8 T	0D19TCIE2, AWV	10/99 ⇨ 09/10
SHARAN I 1.8 T 20V	AJH	09/97 ⇨ 03/10

ILLUSTRATED SECTION -Parte figurata -Partie illustrée -Bildteil -Parte ilustrada

FA-IGN22Q1

COILS

-BOBINE -BOBINES -ZÜNDSPULEN -BOBINAS

(A) P/NRS. - NOTES

- CODICI - NOTE
- RÉFS. - NOTES
- ARTIKEL-NR. - ANMERKUNGEN
- CODIGOS - NOTAS

1 — 9.6507 — 3 — 05,5

IGNITION COILS

Adatt./Suitable:

BMW
12 13 7 559 842
12 13 7 571 644
12 13 7 582 627
12 13 7 594 935
12 13 7 638 477
7 559 842
7 594 935
7 638 477

BOSCH
0 221 504 471
0 221 504 472

4 — NEW - ITEM NOW AVAILABLE FROM PRODUCTION
- NUOVO - ARTICOLO ORA DISPONIBILE PER LA VENDITA
- NOUVEAU - ARTICLE DISPONIBLE EN PRODUCTION COURANTE
- NEU - JETZT ZUM VERKAUF VERFÜGBARER ARTIKEL
- NUEVO - ARTICULO AHORA DISPONIBLE EN PRODUCCION

5

MARKET DIFFUSION: MEDIUM

(B) PICTURE + TECHNICAL INFO

- FOTO + INFORMAZIONE TECNICA
- ILLUSTRATION + INFORMATION TÉCHNIQUE
- BILD + TECHNISCHE INFO
- FOTO + INFORMACIÓN TÉCNICA

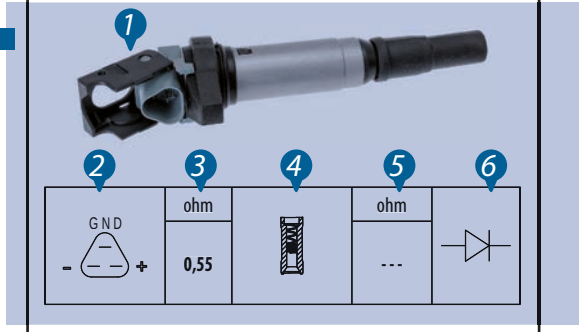

(C) APPLICATION LIST

- GUIDA APPLICAZIONI
- LISTE D'APPLICATIONS
- ANWENDUNGSTABELLE
- LISTA DE APLICACIONES

BMW		
1 I 116 i	N43B16A, N43B20A	03/07 ⇨ 12/11
1 I 118 d	M47D20(204D4)	11/03 ⇨ 02/07
1 I 118 i	N43B20A	09/06 ⇨ 12/13
1 I 120 i	N43B20A, N46B20BD	11/03 ⇨ 12/13
3 V 316 i	N43B16A, N43B16AA	09/07 ⇨ 12/13
3 V 318 i	N43B20A	02/07 ⇨ 12/13
3 V 320 i	N43B20A	09/06 ⇨ 12/13
3 V 325 i	N53B30A	10/06 ⇨ 12/13

(A)

1 **# FACET**

2 **OEM P/NRS.**
·CODICI ORIGINALI
·RÉFS. D'ORIGINE
·ORIGINALTEILE-NR.
·CODIGOS ORIGINALES

3 **PACKAGING SIZE**
·FORMATO CONFEZIONE
·FORMAT DU CONDITIONNEMENT
·ABPACKENSGROESSE
·TAMAÑO DEL ENVASE

4 **PRODUCT AVAILABILITY DATE**
·DATA DI DISPONIBILITÀ DEL PRODOTTO
·DATE DISPONIBILITÉ DU PRODUIT
·PRODUKTVERFUEGBARKEITSDATUM
·FECHA DISPONIBILIDAD ARTÍCULO

5 **NOTE**
·NOTE
·NOTES
·BERMERKUNGEN
·NOTAS

(B)

1 **PICTURE**
·FOTO
·PHOTO
·BILD
·FOTO

2 **LOW TENSION CONNECTION TYPE**
·TIPO CONNESSIONE BASSA TENSIONE
·TYPE CONNECTION BAISSE TENSION
·ANSCHLUSSTYP NIEDERSPANNUNG
·TIPO CONNECCION BAJA TENSION

3 **PRIMARY RESISTANCE**
·RESISTENZA PRIMARIO
·RESISTANCE PRIMAIRE
·WIDERSTAND PRIMÄRSPULE
·RESISTENCIA DEL PRIMARIO

4 **HIGH TENSION CONNECTION TYPE**
·TIPO CONNESSIONE ALTA TENSIONE
·TYPE CONNECTION HAUTE TENSION
·ANSCHLUSSTYP HOCHSPANNUNG
·TIPO CONECCION ALTA TENSION

5 **SECONDARY RESISTANCE (IT CAN BE MEASURED ONLY IF IT IS WITHOUT DIODE)**
·RESISTENZA SECONDARIO (MISURABILE SOLO SE NON È PRESENTE IL DIODO)
·RESISTANCE SECONDAIRE (MESURABLE SEULEMENT S'IL Y A LE DIODE)
·WIDERSTAND SEKUNDÄRSPULE, NUR WENN DIE DIODE ABWESEND IST
·RESISTENCIA DEL SECONDARIO (MENSURABLE SOLAMENTE SI HAY EL DIODO)

6 **SYMBOL OF DIODE (IF PRESENT)**
·RAPPRESENTAZIONE DIODO (SOLO SE PRESENTE)
·SYMBOL DU DIODE (S'IL Y A)
·ABBILDUNG DER DIODE, NUR WENN SIE ANWESEND IST.
·REPRESENTACION DEL DIODO (SI HAY)

9.6XXX/9.8XXX IGNITION COILS

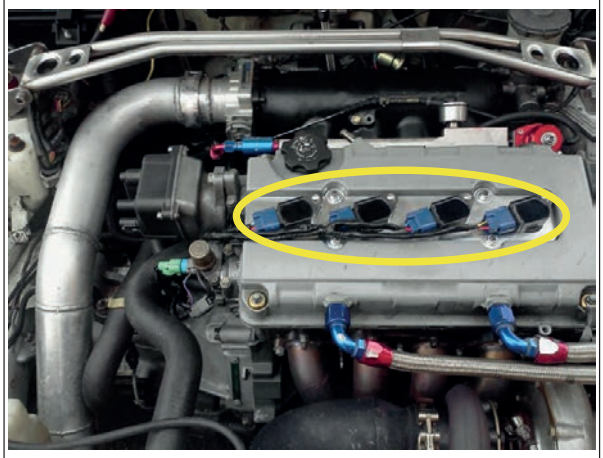

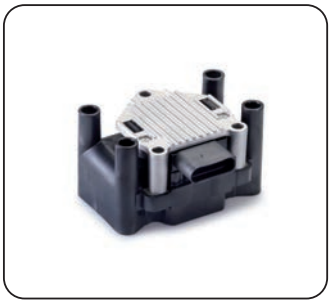

The ignition coils are transformers that are able to provide high voltage pulses. The purpose of these pulses is to generate a spark (arc) between the electrodes of the spark plugs on the internal combustion engine that is of sufficient intensity and duration to start the internal combustion of the air-fuel mixture successfully.

The main causes of failure of the product are:

- short circuit due to overheating
- insufficient power supply
- cable breakage
- low battery
- mechanical, electrical and chemical stress
- humidity

Signs of malfunctions:

- failure to start the engine
- problems of acceleration and power loss
- emergency operation of the control unit
- the engine control light comes on
- NOX emissions
- damage to the catalytic converter

The ignition coils are designed and built to withstand critical mounting conditions in the engine compartment. In particular they must meet the following requirements:

- operating temperature:
  - from -40 ° C to + 125 ° C for devices mounted on the head and motor (typically, Pencil Coil); the parts in contact with the candle must withstand 180 ° C.

The coils are subjected to rigorous qualification and durability tests to determine if the product is suitable for being built and sold:

- Electromagnetic immunity test
- Proof of resistance to rapid temperature cycles
- Free discharge dielectric strength test
- Duration test
- Vibration resistance test

Pass these tests and allow the approval to produce during assembly the product undergoes strict control cycles which provide **100% testing**.

marketing@facet.it

Structural components and operating principles

The main elements of construction of a modern ignition coil are:
- primary electrical circuit (copper wire wound around the primary iron core)
- secondary electrical circuit (copper wire wound around the secondary iron core)
- the magnetic circuit (pack)
- the electronic circuit
- the case (containing all the other elements coated in epoxy resin)
- various elements (incorporated only in some models): the interference suppressor, the high voltage diode, the electronic power switch, etc. The primary winding is piloted by the electronic power switch until it reaches the required current. The moment the current is switched off, a high voltage, typically between 20 and 30 kV, is generated on the secondary output, to ensure ignition of the spark. Since the high voltage is generated by releasing the induction energy stored by the primary inductance, these ignition systems are also called "inductive discharge".

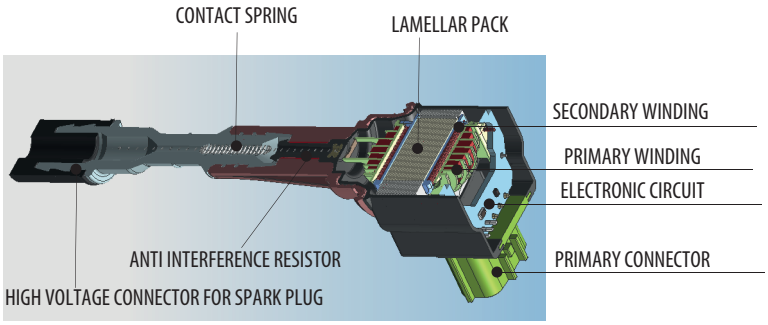

• Mechanical distribution coils:

These are individual coils and the high voltage is "distributed" to the spark plugs through special H.V. cables (abbreviation for High Voltage), by a rotor fitted on the distributor under the "cap". In mechanical distribution ignition systems, the high voltage supplied by the coil is transferred by special high voltage cables and "distributed" to the spark plugs by means of a "commutator rotor" under the distributor "cap", moved by the engine shaft. After a few micro-seconds, when the high voltage exceeds about 15 kV (as an absolute value), the spark is ignited between the electrodes of the spark plug.

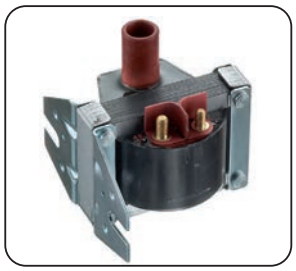

• Wasted spark coil (second generation):

This type of coil is called wasted spark because during the compression stroke there is a normal ignition spark, but during the exhaust stroke, when the gases have different electrical characteristics before and after combustion, there is a spark of lower intensity and therefore a small waste of energy.

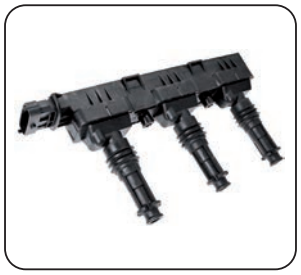

• Direct ignition coil (third generation):

The negative output on the secondary winding is connected directly to a single spark plug, while the other end is connected to an earthing point through a low voltage connection, or to the positive terminal of the primary winding (+ battery) inside the coil. There is therefore a coil for each spark plug.

9.6XXX/9.8XXX BOBINE DI ACCENSIONE

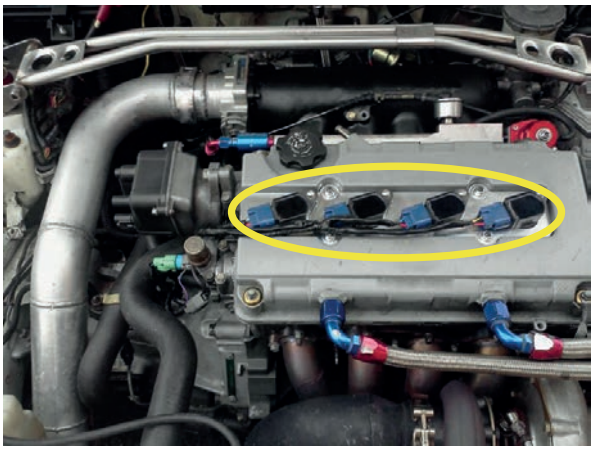

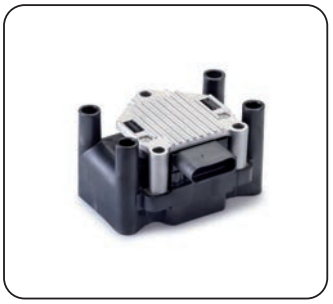

Le bobine d'accensione consentono di accumulare una carica nel sistema elettrico a bassa tensione del veicolo, immagazzinata e fatta scoppiare con una scintilla elettrica prodotta dalla candela per fare accendere in modo ottimale la miscela aria/carburante in modo che si verifichi la combustione completa nei motori a scoppio.

Principali cause malfunzionamento:
- corto circuito per surriscaldamento
- alimentazione insufficiente
- rottura cavo
- batteria scarica
- stress meccanici, elettrici e chimici
- umidità

Effetti malfunzionamento:
- mancato avviamento del motore
- problemi di accelerazione e calo di potenza
- funzionamento di emergenza della centralina
- accensione della spia di controllo motore
- emissioni NOX
- danni al convertitore catalitico

Le bobine di accensione sono progettate e costruite per sopportare le condizioni critiche di montaggio nel vano motore. In particolare devono soddisfare i seguenti requisiti:
- temperatura di funzionamento:
    - da - 40°C a + 125°C per i dispositivi montati sulla testa del motore (tipicamente, Pencil Coil); le parti a contatto con la candela devono resistere a 180°C.

Le bobine sono sottoposte a **rigorose prove di qualificazione e di durata** per stabilire se il prodotto è idoneo per essere costruito e venduto:
- Prova di immunità elettromagnetica
- Prova di resistenza ai cicli rapidi di temperatura
- Prova di rigidità dielettrica a scarica libera
- Prova di durata
- Prova di resistenza alle vibrazioni

Superate tali prove e concesso il benestare a produrre, durante l'assemblaggio il prodotto viene sottoposto a severi cicli di controllo che prevedono il **collaudo al 100%**.

marketing@facet.it

Elementi costruttivi e principio di funzionamento

Gli elementi costruttivi principali di una bobina moderna sono:
- circuito elettrico primario (filo di rame avvolto sul rocchetto primario)
- circuito elettrico secondario (filo di rame avvolto sul rocchetto secondario)
- il circuito magnetico (pacco lamellare)
- circuito elettronico
- il vassoio (contenente gli altri elementi inglobati in resina epossidica)
- elementi vari (incorporati solamente in alcuni modelli): il soppressore di disturbi, il diodo ad alta tensione, l'interruttore elettronico di potenza, ecc.

L'avvolgimento primario viene pilotato dall'interruttore elettronico fino a raggiungere la corrente richiesta. Nell'istante di interruzione della corrente, sull'uscita secondaria viene generata l'alta tensione tipicamente compresa tra 20 e 30 kV per garantire l'innesco della scintilla. Poiché l'alta tensione è generata liberando l'energia induttiva immagazzinata dall'induttanza del primario, questi sistemi di accensione vengono anche chiamati "a scarica induttiva".

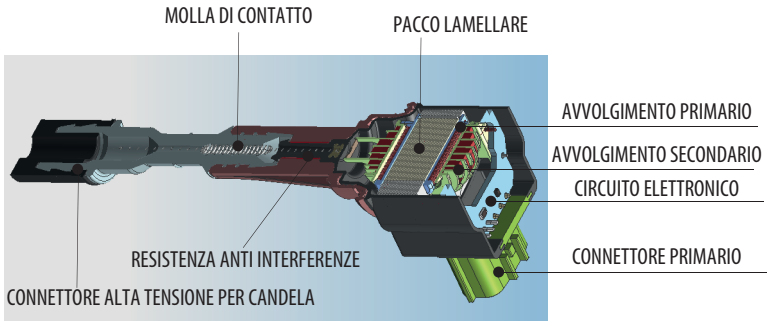

• Bobine per distribuzione meccanica:

Si tratta di bobine singole e l'alta tensione viene "distribuita" alle candele, tramite appositi cavi A.T. (abbreviazione di Alta Tensione), da un distributore rotante montato sullo spinterogeno, all'interno della "calotta". Nei sistemi di accensione a distribuzione meccanica, l'alta tensione erogata dalla bobina viene trasportata tramite appositi cavi ad alta tensione e "distribuita" alle candele tramite un "commutatore rotante" posto nella "calotta" (distributore) e mosso dall'albero motore. Dopo pochi microsecondi, quando l'alta tensione supera (come valore assoluto) i 15 kV circa, si innesca la scintilla tra gli elettrodi della candela.

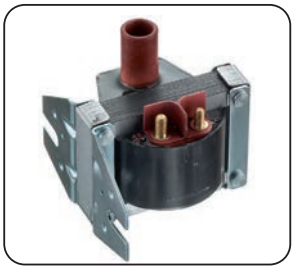

• Bobine a scintilla persa (seconda generazione):

Questo tipo di bobina viene chiamato a scintilla persa perché, mentre nel cilindro in fase di compressione si ha la normale scintilla di accensione, grazie alle diverse caratteristiche elettriche dei gas prima e dopo la combustione, nel cilindro in fase di scarico si ha una scintilla di piccola intensità e quindi una piccola perdita di energia.

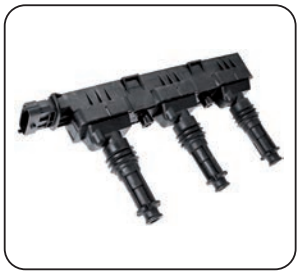

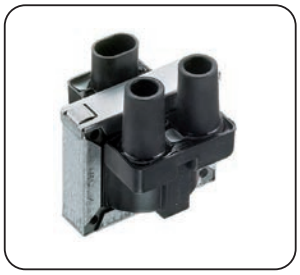

• Bobine dirette (terza generazione):

L'uscita negativa del secondario è collegata ad una sola candela direttamente, l'altro capo è collegato a massa con una connessione a bassa tensione, oppure al terminale positivo del primario (+ batteria) all'interno della bobina. Abbiamo quindi una bobina per ogni candela.

9.6XXX/9.8XXX BOBINES D'ALLUMAGE

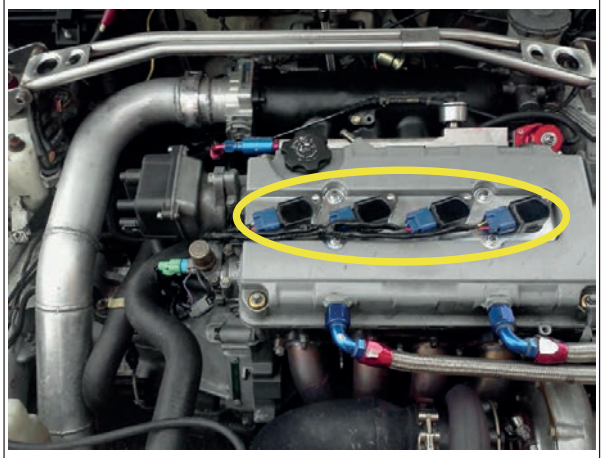

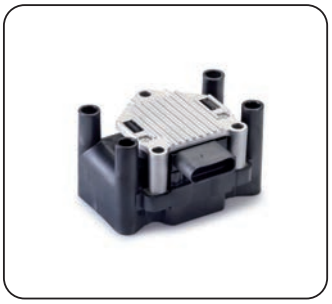

Les bobines d'allumage permettent d'accumuler de l'énergie dans le système électrique à basse tension du véhicule. Stockée, celle-ci permet aux bougies de créer l'étincelle électrique afin d'allumer de manière optimale le mélange air/carburant garantissant ainsi une combustion complète sur les moteurs à combustion.

Principales causes de dysfonctionnement:

- court-circuit dû à une surchauffe
- alimentation insuffisante
- rupture câble
- batterie à plat
- stress mécaniques, électriques et chimiques
- humidité

Conséquences du dysfonctionnement:

- le moteur ne s'allume pas
- problèmes d'accélération et baisse de puissance
- le boîtier électronique fonctionne en urgence
- voyant de contrôle moteur allumé
- émissions NOX
- dommages sur le convertisseur catalytique

Les bobines d'allumage sont conçues et construites pour supporter des conditions difficiles de montage sous le capot. Elles doivent notamment respecter les critères suivants :

- température de fonctionnement :
  - de - 40°C à + 125°C pour les dispositifs montés sur la tête du moteur (habituellement, bobines-crayon);
    les parties au contact de la bougie doivent résister à 180°C.

Les bobines sont soumises à des tests **rigoureux de qualité et de longévité** garantissant un produit adapté à la construction et à la vente :

- Test d'immunité électromagnétique
- Test de résistance aux cycles rapides de température
- Test de rigidité diélectrique à décharge libre
- Test de durée
- Test de résistance aux vibrations

Si ces tests sont réussis et le feu vert pour la production est donné, lors de l'assemblage, le produit est à nouveau soumis à des cycles de contrôle qui prévoient son **inspection à 100 %**.

marketing@facet.it

Éléments et principes de fonctionnement

Les èléments principales d'une bobine moderne sont :
• circuit électrique primaire (fil de cuivre enroulé autour du bobinage primaire)
• circuit électrique secondaire (fil de cuivre enroulé autour du bobinage secondaire)
• le circuit magnétique (paquet magnétique)
• le plateau (contenant les autres éléments englobés en résine époxy)
• éléments divers (présents seulement sur certains modèles) : l'antiparasite, la diode à haute tension, l'interrupteur électronique de puissance, etc. Le bobinage primaire est piloté par l'interrupteur électronique jusqu'à ce que le courant requis soit atteint. Au moment de l'interruption du courant, une haute tension, habituellement comprise entre 20 et 30 kV, est générée sur la sortie secondaire pour garantir l'étincelle. Puisque la haute tension est générée en libérant l'énergie inductive stockée par l'inductance du circuit primaire, ces systèmes d'allumage sont également appelés « à décharge inductive ».

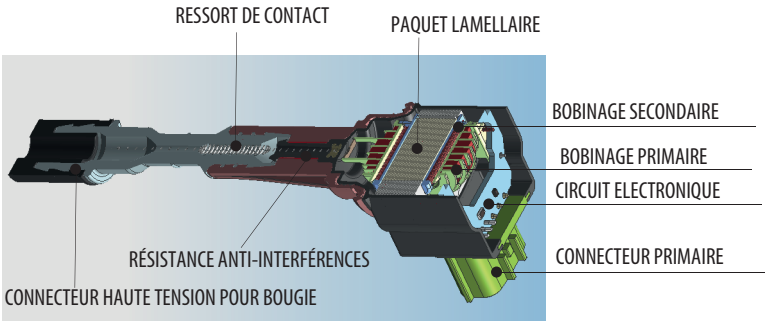

• Bobines pour distribution mécanique:

Il s'agit de bobines simples et la haute tension est distribuée aux bougies avec des câbles H.T. (abréviation de haute tension), par un distributeur tournant monté sur l'allumeur, à l'intérieur de la tête de delco. Sur les systèmes d'allumage à distribution mécanique, la haute tension fournie par la bobine est transportée par des câbles à haute tension et distribuée aux bougies avec un commutateur tournant placé dans la tête de delco (distributeur) et mis en mouvement par l'arbre moteur. Après quelques microsecondes, lorsque la haute tension dépasse (en valeur absolue) les 15 kV environ, l'étincelle est produite sur les électrodes de la bougie.

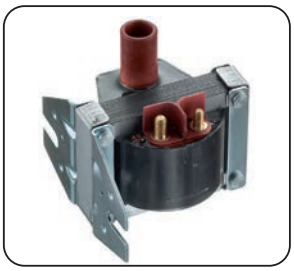

• Bobine à étincelle perdue (seconde génération):

Ce type de bobine est appelée de la sorte, car tandis que dans le cylindre en phase de compression l'on obtient une étincelle d'allumage normale, avec les différentes caractéristiques électriques des gaz avant et après la combustion, dans le cylindre en phase de déchargement, l'on obtient une étincelle de faible intensité et donc une perte d'énergie moindre. Elles peuvent être des typologies suivantes : Bobines avec 2 sorties H.T.

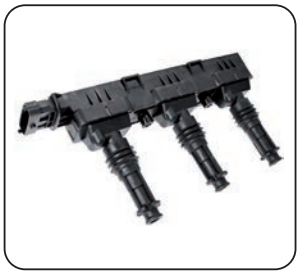

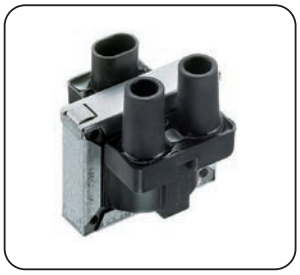

• Bobinas directas (tercera generación):

La sortie négative du bobinage secondaire est directement branchée sur une seule bougie, l'autre extrémité étant reliée à la masse avec une connexion à basse tension, ou au pôle positif du circuit primaire (+ batterie) à l'intérieur de la bobine. Nous avons donc une bobine pour chaque bougie.

9.6XXX/9.8XXX ZÜNDSPULEN

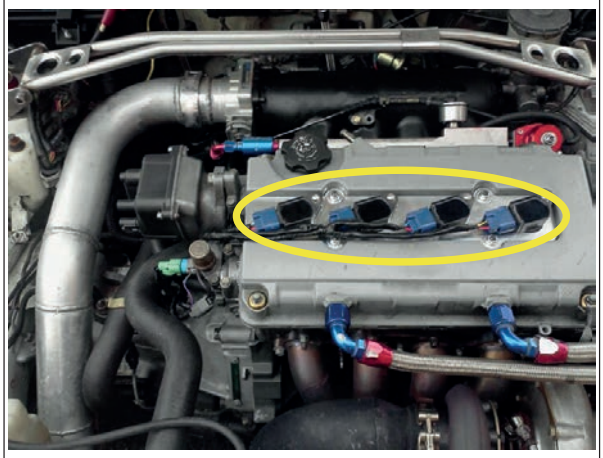

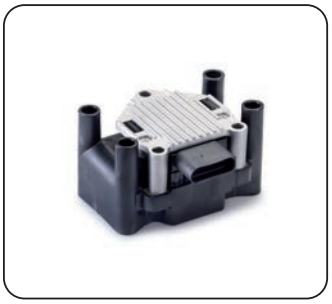

Die Zündspulen dienen als Transformatoren, indem sie für Hochspannungsimpulse sorgen.
Der Zweck dieser Impulse ist es, einen Funken (Lichtbogen) zwischen den Elektroden der Zündkerzen des Verbrennungsmotors zu erzeugen, dessen Intensität und Dauer ausreicht, um die Verbrennung des Gemischs aus Luft und Treibstoff im Inneren richtig in Gang zu setzen.

Wichtigste Störungsursachen:
- Kurzschluss durch Überhitzen
- unzureichende Versorgung
- Kabelbruch
- entladene Batterie
- mechanische, elektrische und chemische Beanspruchungen
- Feuchtigkeit

Störungsauswirkungen:
- nicht erfolgtes Anspringen des Motors
- Beschleunigungsprobleme und Leistungsabfall
- Notbetrieb des Steuergeräts
- Aufleuchten der Motorkontrollanzeige
- NOX-Emissionen
- Schäden am Katalysator

Die Zündspulen wurden so entwickelt und gebaut, dass sie den kritischen Bedingungen der Montage im Motorraum standhalten. Insbesondere müssen sie die folgenden Anforderungen erfüllen:
- Betriebstemperatur:
  - von - 40°C bis + 125°C für auf dem Motorkopf montierte Vorrichtungen (normalerweise Pencil Coil); die mit der Zündkerze in Kontakt geratenden Teile müssen 180°C standhalten.

Die Zündspulen werden **strengen Prüfungen hinsichtlich Qualifizierung und Beständigkeit unterzogen,** um festzustellen, ob das Produkt sich für die Herstellung und den Verkauf eignet:
- Prüfung der elektromagnetischen Störfestigkeit
- Prüfung der Beständigkeit bei schnellen Temperaturwechseln
- Prüfung der Durchschlagfestigkeit bei freier Entladung
- Dauerversuch
- Prüfung der Schwingungsfestigkeit

Nachdem es diese Prüfungen bestanden und die Produktionsgenehmigung erhalten hat, wird das Produkt strengen Kontrollzyklen unterzogen, die die **100 % Endabnahme vorsehen.**

marketing@facet.it

Bauteile und Funktionsprinzip

Die wichtigsten baulichen Elemente einer modernen Zündspule umfassen:
• Primärstromkreis (auf die Primärspule gewickelter Kupferdraht)
• Sekundärstromkreis (auf die Sekundärspule gewickelter Kupferdraht)
• Magnetischer Kreis (Paket)
• das Tablett (das die anderen in Epoxidharz eingeschlossenen Elemente enthält)
• verschiedene Elemente (nur in einige Modelle eingebaut): den Störungsunterdrücker, die Hochspannungsdiode, den elektronischen Leistungsschalter, usw. Die Primärwicklung wird von dem elektronischen Schalter bis zum Erreichen des gewünschten Stroms gesteuert. Im Moment der Stromunterbrechung wird auf dem Sekundärausgang die normalerweise zwischen 20 und 30 kV liegende Hochspannung erzeugt, um den Funkenschlag zu garantieren. Da die Hochspannung durch das Freisetzen von von der Induktanz des Primärstromkreises gespeicherter induktiver Energie erzeugt wird, werden diese Zündsysteme auch „Systeme mit induktiver Entladung" genannt.

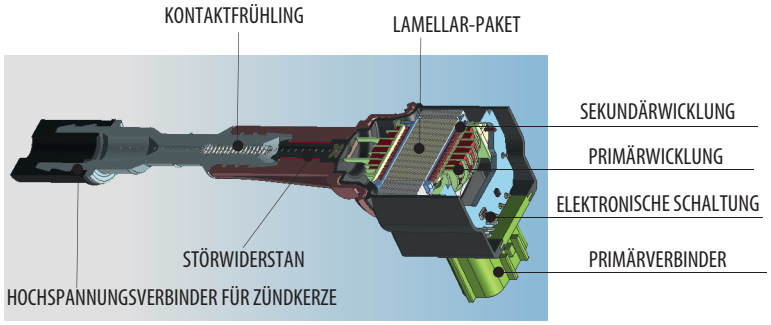

• Zündspulen zur mechanischen Verteilung:

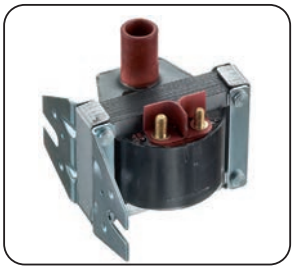

Es handelt sich um Einzelspulen und die Hochspannung wird an die Zündkerzen über entsprechende HS-Kabel „verteilt" (Abkürzung von Hochspannung), und zwar über einen im Inneren der „Haube" auf dem Zündverteiler montierten Drehverteiler. In Zündsystemen mit mechanischer Verteilung wird die von der Zündspule abgegebene Hochspannung mit Hilfe entsprechender Hochspannungskabel befördert und an die Kerzen über einen in der „Haube" (Verteiler) positionierten und von der Motorwelle angetriebenen „Drehkommutator" verteilt. Nach wenigen Mikrosekunden wird, wenn die Hochspannung (als absoluten Wert) ca. 15 kV übersteigt, der Funke zwischen den Elektroden der Zündkerze gezündet.

• Doppelfunkenzündspulen (zweite generation)

Dieser Spulentyp wird als Doppelfunkenzündspule bezeichnet, da bei Zylinder in Kompressionsphase der normale Zündfunke erzeugt wird, aufgrund der unterschiedlichen elektrischen Eigenschaften der Gase vor und nach der Verbrennung wird im Zylinder beim Entladen ein Funke geringer Intensität erzeugt und damit ein geringer Energieverlust. Es gibt die folgenden Typen: Spulen mit zwei HS-Ausgängen.

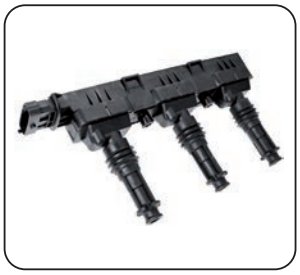

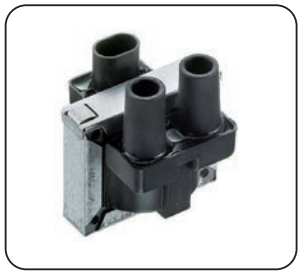

• Direkte Zündspulen (dritte Generation):

Der negative Ausgang des Sekundärstromkreises ist an nur eine Kerze direkt angeschlossen, das andere Ende ist mit einem Niederspannungsanschluss an die Masse angeschlossen bzw. an die positive Klemme des Primärstromkreises (+ Batterie) im Inneren der Spule. Wir haben also eine Spule für jede Kerze.

9.6XXX/9.8XXX BOBINAS DE ENCENDIDO

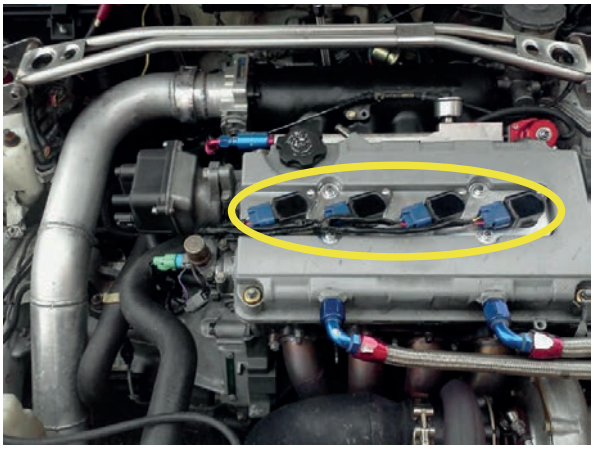

Las bobinas de encendido permiten acumular una carga en el sistema eléctrico de baja tensión del vehículo, que se almacena y se hace explotar con una chispa eléctrica generada por la bujía para encender de forma óptima la mezcla de aire/combustible y para que se produzca la combustión completa en los motores de explosión.

Causas principales de mal funcionamiento:

- cortocircuito por recalentamiento
- alimentación insuficiente
- rotura del cable
- batería descargada
- estrés mecánico, eléctrico y químico
- humedad

Efectos de un mal funcionamiento:

- falta de arranque del motor
- problemas de aceleración y disminución de potencia
- funcionamiento de emergencia de la centralita
- encendido del testigo de control del motor
- emisiones NOX
- daños al convertidor catalítico

Las bobinas de encendido están diseñadas y fabricadas para soportar las condiciones críticas de montaje en el compartimento del motor. En especial, deben cumplir los siguientes requisitos:

- temperatura de funcionamiento:
  - de - 40°C a + 125°C para los dispositivos montados en el cabezal del motor (típicamente, Pencil Coil); las partes en contacto con la bujía deben resistir 180°C.

Las bobinas se someten a **rigurosas pruebas de cualificación y de duración** para determinar si el producto es apto para la fabricación y la venta:

- Prueba de inmunidad electromagnética
- Prueba de resistencia a los ciclos rápidos de temperatura
- Prueba de rigidez dieléctrica de descarga libre
- Prueba de duración
- Prueba de resistencia a las vibraciones•

Tras superar esas pruebas, y con la aprobación para la producción, durante el ensamblaje el producto se somete a severos ciclos de control que constituyen el **ensayo al 100%**.

marketing@facet.it

Elementos constructivos y principio de funcionamiento

Los elementos constructivos principales de una bobina moderna son:
• circuito eléctrico primario (alambre de cobre envuelto en el carretel primario)
• circuito eléctrico secundario (alambre de cobre envuelto en el carretel secundario)
• el circuito magnético (paquete)
• la bandeja (que contiene los otros elementos englobados en resina epoxy)
• elementos varios (incorporados solamente en algunos modelos): el supresor de disturbios, el diodo de alta tensión, el interruptor electrónico de potencia, etc. El bobinado primario está controlado por el interruptor electrónico hasta que alcanza la corriente prevista. En el instante de interrupción de la corriente, en la salida secundaria se genera la alta tensión que típicamente es de 20 a 30 kV, para garantizar el encendido de la chispa. Como la alta tensión se genera liberando la energía inductiva almacenada por la inductancia del primario, estos sistemas de encendido también se llaman "de descarga inductiva".

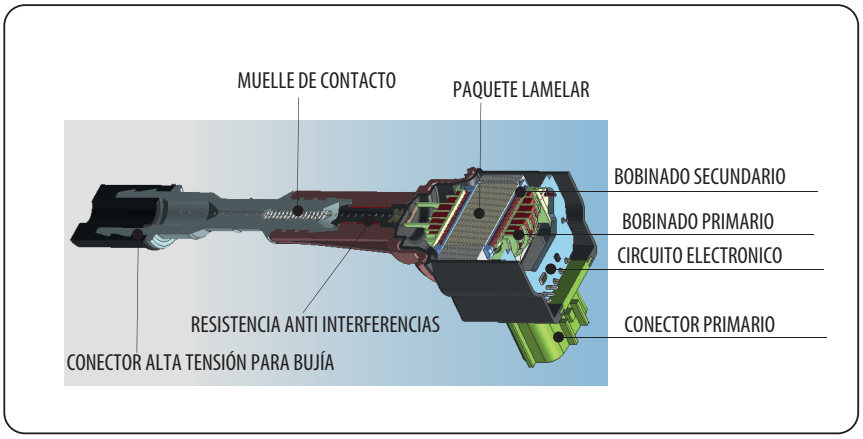

• Bobinas para distribución mecánica:

Se trata de bobinas individuales, y la alta tensión se "distribuye" a las bujías mediante los correspondientes cables A.T. (abreviatura de Alta Tensión) mediante un distribuidor giratorio montado en el distribuidor de encendido, en el interior de la "tapa". En los sistemas de encendido de distribución mecánica, la alta tensión distribuida por la bobina se transporta mediante los correspondientes cables de alta tensión y se "distribuye" a las bujías mediante un "conmutador giratorio" presente en la "tapa" (distribuidor) y movido por el árbol motor. Después de pocos microsegundos, cuando la alta tensión supera (como valor absoluto) los 15 kV aproximadamente, se enciende la chispa entre los electrodos de la bujía.

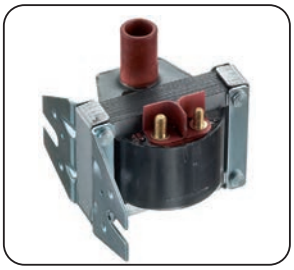

• Bobinas de chispa perdida (segunda generación):

Este tipo de bobina se llama de chispa perdida porque, mientras en el cilindro en fase de compresión se tiene la chispa normal de encendido, gracias a las distintas características eléctricas de los gases antes y después de la combustión, en el cilindro en fase de descarga se tiene una chispa de baja intensidad y, por lo tanto, una pequeña pérdida de energía. Pueden ser de los siguientes tipos: Bobinas con 2 salidas A.T.

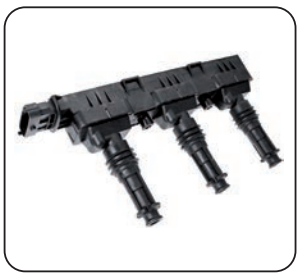

• Bobinas directas (tercera generación):

La salida negativa del secundario está conectada a una sola bujía directamente, el otro extremo está conectado a masa con una conexión de baja tensión, o al terminal positivo del primario (+ batería) dentro de la bobina. Por lo tanto, tenemos una bobina por cada bujía.

FACET 9.6001D — 07

COILS

Adatt./Suitable:

ALFA ROMEO
510 897
116 42 65 079 00
60744199

BMW
12 13 1 357 296
12 13 1 359 637

CITROËN
DM 212 08B

DAF
316447

FIAT
39322140
4071394
4158493

HITACHI
C1Z500
C1Z500E

INNOCENTI
39322140

ISUZU
981360005
981360007
982511535
982513508
9-82513508-0
982513509
9-82513509-0

LADA
2101-3705000-02
21013-7050560
2101-3705060-00

LANCIA
4158493

LAND ROVER
PRC9858
RTC5629

MAGIRUS-DEUTZ
41912606

MERCEDES-BENZ
A 000 158 00 03
A 000 158 38 03

PEUGEOT
5970 11
5970 28

RENAULT
77 00 552 370
77 00 562 370
77 01 348 252

ROVER
GCL110
RTC3433

SAAB
85 22 328

SEAT
SE 141915.000A

TALBOT
0055 50 5600

VOLVO
3638411
36384113

VW
043 905 115 A
043 905 115 C
052 905 105
221 100 019

1116 **Universal coil (except for electronic ignition)**
- Bobina universale (esclusa accensione elettronica)
- Bobine universelle (sauf systéme d'allumage éléctronique)
- Universalzündspulen (nicht für elektronische Zündsysteme)
- Bobina universal (con excepción del encendido electronico)

960 **Dry (epoxy) coil replacing original oil-bath coil version**
- Bobina (resinizzata) sostituente originale a bagno d'olio
- Bobine seche, remplaçant la bobine d'origine à bain d'huile
- Trockenspule, die die Originale im Ölbad ersetzt
- Bobina seca, sustituye modelo original con baño de aceite

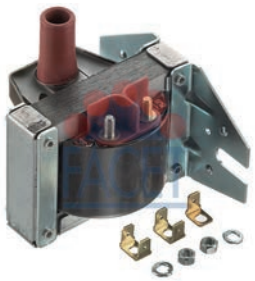

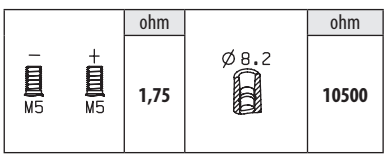

ALFA ROMEO		
ALFASUD 1.2	AR30102	06/72 ⇨ 09/84
ALFETTA 1.8	AR01608X	07/74 ⇨ 04/82
GIULIETTA I 1.3	AR01644	10/77 ⇨ 06/83
DACIA		
1210 1.2	--	01/69 ⇨
1310 1.3	810-02/-99	05/83 ⇨ 07/04
1410 1.4	--	01/69 ⇨
FIAT		
124 1200	124A.000	07/66 ⇨ 10/73
124 1400 Special	124B2.000	12/68 ⇨ 12/72
FIAT		
124 1600 Special T	132AC.000	01/73 ⇨ 07/75
126 600	126A.000	09/72 ⇨ 06/77
127 0.9	100GL.000, 100GL.048	06/71 ⇨ 12/84
127 1.0	127A.000	01/77 ⇨ 12/86
128 1.1	128A.000	03/69 ⇨ 12/84
131 1.3 Mirafiori	131A6.000	10/74 ⇨ 09/81
132 1.6	132C.000	05/77 ⇨ 09/82
242 1.6	124B3.000	10/75 ⇨ 07/82
500 0.5	110F.000, 120.000	01/60 ⇨ 12/75
500 0.6	111A000	08/68 ⇨ 01/76
DUCATO I 1.8	169B	01/82 ⇨ 12/88
600 0.6	--	03/55 ⇨ 05/61
850 0.8	100G.000	07/64 ⇨ 10/72
ARGENTA 1600	132D.000	04/81 ⇨ 12/85
ARGENTA 1600 i.e	132D.000	04/81 ⇨ 12/85
FIORINO I 1.0	127A.000	01/80 ⇨ 12/87
FIORINO I 1050	127A.000	01/80 ⇨ 12/87
FIORINO I 900	100GL.000	10/77 ⇨ 10/86
PANDA I 1000	156A2.000	12/93 ⇨
PANDA I 1000 CLX	156A2.000	05/91 ⇨ 12/94
PANDA I 1000 Fire	156A2.000	05/86 ⇨ 04/91
PANDA I 1000 Fire [DEU]	156A2.048	01/86 ⇨ 07/89
PANDA I 750	141B.000, 156A4.000	01/86 ⇨ 01/95
PANDA I 800	100GL6.000	02/81 ⇨ 12/85
PANDA I 900	100GL3.000	10/80 ⇨ 06/94
PANDA I 900 CL	146A.048	01/86 ⇨ 12/92
PANDA I 950	A112B1.054	09/82 ⇨ 08/83
PANDA I 950 4x4	A112B1.054	09/83 ⇨ 12/86
REGATA 1.1 60 , 60 L	138B.000	10/83 ⇨ 08/86
REGATA 1.6	149A.000	10/84 ⇨ 06/89
REGATA 70 1.3	138B2.000, 149A3.000	09/83 ⇨ 07/89
REGATA 85 1.6	149A.000	10/83 ⇨ 06/90
RITMO I 1.1	146A4.048	04/85 ⇨ 12/87
RITMO I 1.3	149A3.000	11/83 ⇨ 08/85
RITMO II 75 1.5	138A2.000	09/85 ⇨ 12/88
UNO 45 0.9	146A.000, 146A1.000	03/83 ⇨ 07/96
UNO 45 0.9 Trend	146A.048	09/89 ⇨ 09/92
UNO 60 1.1 SX	--	01/83 ⇨ 12/85
X 1/9 1.3	128AS.000	10/75 ⇨ 06/78
FSO		
126P 0.6	--	09/72 ⇨ 07/77
POLONEZ I 1.5	AA	10/77 ⇨ 08/88
INNOCENTI		
MINI 120	--	01/75 ⇨ 12/83
LADA		
NIVA I 1600	BA32121	12/76 ⇨ 12/93
LANCIA		
A 112 0.9 Junior	A112A5.000	03/81 ⇨ 06/86
LAND ROVER		
90 2.5 4x4	17H	09/85 ⇨ 08/90
110/127 2.5 4x4	17H	10/85 ⇨ 07/90
DEFENDER 2.25	--	01/87 ⇨
DEFENDER 2.5 90, 110	--	08/90 ⇨ 09/01
MERCEDES-BENZ		
O 309	M115.921, M115.952	01/68 ⇨ 02/89
PEUGEOT		
305 1.5	117(XR5S)	05/80 ⇨ 09/82
505 1.8	105(XM7)	06/81 ⇨ 10/85
RENAULT		
4 0.8	80001	09/71 ⇨ 12/88
5 1.3	810719, 810726	09/76 ⇨ 09/84
5 1.4 Alpine A5	840725	09/77 ⇨ 09/81
9 1.2	C1G700, C1G710	09/85 ⇨ 12/88
11 1.1	C1E715, C1E720	03/83 ⇨ 06/86
11 1.2	C1G700, C1G710	10/84 ⇨ 12/88
20 2.0	829700, 829701, 829702, 829703, 829.01	10/77 ⇨ 12/83
SEAT		
FURA 0.9	100GL3000	01/82 ⇨ 06/86
IBIZA I 0.9	146A000	08/86 ⇨ 05/93
MARBELLA 0.8	5K9K718	08/86 ⇨ 12/93
MARBELLA 0.9	09NCA	01/87 ⇨ 12/93
PANDA 0.9	100GL3000	10/80 ⇨ 12/86
PANDA 34 850	--	01/80 ⇨ 12/83
PANDA 35 850	--	01/80 ⇨ 12/83
PANDA 45	--	01/82 ⇨ 12/85
TERRA 0.9	09NCA	02/87 ⇨ 12/96
TALBOT		
TAGORA 2.1	5N2	06/80 ⇨ 12/83
ZASTAVA		
101 1.1	128A.000, 128A.064	06/73 ⇨ 12/93
101 1.1 Super	128AC5.000	07/79 ⇨ 09/81

FACET 9.6002 — 07,5

COILS

Adatt./Suitable:

BOSCH
0 986 221 028

DUCELLIER
2 526 015
2 526 015 A

FIAT
7588435

MAGNETI MARELLI
060705404010
607 056 01
BAE 506 A

03 **Supplied until depletion**
- Fornibile fino ad esaurimento delle scorte
- Fourni jusqu'à épuisement du stock
- Lieferbar solange vorrat reicht
- Suministrado hasta el stock termina

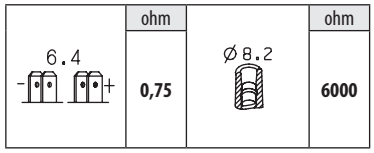

FIAT		
CROMA I 2000 CHT	154A1.000	12/85 ⇨ 02/89
FIORINO I 1.5	149C1.000	01/88 ⇨ 08/93
FIORINO II 1.5 iE	149C1.000	01/88 ⇨ 10/92
FIORINO II 75 i.e. 1.5	149C1.000	05/88 ⇨ 12/93
REGATA 70 1.3	138B2.000, 149A3.000	09/83 ⇨ 07/89
REGATA 85 1.5	149A5.000	05/85 ⇨ 12/87
RITMO I 1.3	149A3.000	11/83 ⇨ 08/85
RITMO I 1.5	138C2.048	10/85 ⇨ 05/87
UNO 45 1.0 Fire	--	01/83 ⇨ 12/89
UNO 60 1.1 SX	--	01/85 ⇨ 12/89

FACET 9.6003 — 07,5

COILS

Adatt./Suitable:

BOSCH
0 221 119 030
0 221 122 012

FIAT
4386221
4460205

LANCIA
4386221
4460205

MAGNETI MARELLI
607 029 02
607 029 03
BAE 209 B
BAE 209 C

03 **Supplied until depletion**
- Fornibile fino ad esaurimento delle scorte
- Fourni jusqu'à épuisement du stock
- Lieferbar solange vorrat reicht
- Suministrado hasta el stock termina

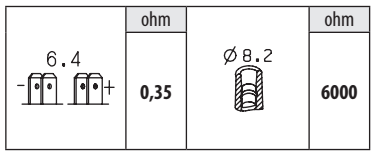

FIAT		
ARGENTA 2000 i.e.	132C3.000	06/81 ⇨ 07/86
CROMA I 1600	154A.048	12/85 ⇨ 12/90

FIAT		
CROMA I 2000 CHT	154A1.000	12/85 ⇨ 02/89
FIORINO I 1.5	149C1.000	01/88 ⇨ 08/93
FIORINO II 1.5 iE	149C1.000	01/88 ⇨ 10/92
FIORINO II 75 i.e. 1.5	149C1.000	05/88 ⇨ 12/93
REGATA 1.6	--	09/86 ⇨ 06/89
REGATA 100 Super 1.6	149A2.000	10/83 ⇨ 12/90
REGATA 85 1.5	149A5.000	05/85 ⇨ 12/87
RITMO I 1.6	149A4.000	01/83 ⇨ 12/87
RITMO II 75 1.5	138A2.000	09/85 ⇨ 12/88
UNO 70 1.3i SX	--	01/83 ⇨ 12/89
UNO 75 i.e. 1.5	138C2.048	10/85 ⇨ 12/93
LANCIA		
BETA 1600	828B.000	08/73 ⇨ 07/82
DELTA I 1.5	831A1.000, 831B1.000	09/79 ⇨ 12/92
PRISMA 1.5	831B1.000	05/86 ⇨ 07/89
PRISMA 1.6	831B6.000	08/86 ⇨ 02/92

FACET 9.6005

05

COILS

Adatt./Suitable:

BOSCH
F 000 ZS0 114

CITROËN
5970 43
96 010 513
97 530 780

DUCELLIER
520 073
520 073 A

HITACHI
138754
2508754

MAGNETI MARELLI
060717014012

PEUGEOT
5970 43

ohm		ohm
0,68	Ø 6.3	6800

CITROËN		
AX 1.3 Sport	M4A	04/87 ⇨ 12/88
AX 10	C1A	09/86 ⇨ 06/92
AX 10 E	C3A	12/86 ⇨ 12/88
AX 11	H1A, H1B, HDZ(TU1M)	09/86 ⇨ 12/97
AX 11 4x4	H1A	06/91 ⇨ 07/92
AX 11 Cat	HAZ(TU1CP)	09/88 ⇨ 12/89
AX 14	K1A(TU3), K1B, K1F, K1G, K1J, K2A, K2B, K2D, KAY(TU3CP), KDX(TU3M/Z), KDY(TU3FM)	09/86 ⇨ 04/97
AX 14 4x4	KDY(TU3FM)	08/91 ⇨ 12/96
AX 14 GT	KDZ(TU3M/Z)	01/89 ⇨ 12/91
BX 1.1	109LA, H1A	04/86 ⇨ 06/91
BX 1.4	150C, K1F, K2D	07/86 ⇨ 12/94
BX 1.4 E	150B(XY8), 150J, 150Y, K1F, KAZ	09/82 ⇨ 12/94
BX 1.6	182A, B6D, B6E	01/87 ⇨ 12/94
BX 1.9	159C, D6U, DKK	09/85 ⇨ 12/94
BX 1.9 GTi	D6D, D6K	01/87 ⇨ 01/92
BX 14	150C, KDY(TU3M), KDZ(TU3M/Z)	01/86 ⇨ 02/93
BX 14 E	150A, 150C, K1G	10/82 ⇨ 02/93
BX 16	180Z	03/86 ⇨ 12/94
BX 19	D6A(XU9J2), DKZ(XU9JA)	07/86 ⇨ 12/94
BX 19 Cat	DFZ(XU9J1)	07/86 ⇨ 12/94
BX 19 GTi	D6A(XU9J2), DKZ(XU9JA)	07/86 ⇨ 02/93
BX 19 GTi 4x4	DKZ(XU9JA)	06/88 ⇨ 02/93

CITROËN		
C15 1.0	108C(XV8), C1A, C1A(TU9/K), C1B(TU9/W), TU9	10/84 ⇨ 12/97
C15 1.1	H1A, HDZ(TU1M), TU1	08/88 ⇨ 07/96
C15 1.1 i	HDZ(TU1M), TU1MZ	07/88 ⇨ 12/96
C15 1.4	K1A, K1G, K1H(TU3A), KDY(TU3M)	07/87 ⇨ 12/96
C15 1.4 E	K1F, K1J, K2D, K3A, KAZ	07/86 ⇨ 12/96
C15 1.4 i	KDY(TU3FM), KDY(TU3M)	05/91 ⇨ 12/96
PEUGEOT		
205 I 1.4	TU3	01/83 ⇨ 12/90
205 I 1.6 GTI	XU5J1	01/83 ⇨ 12/90
205 I 1.9 GTI	D6B(XU9JA)	10/86 ⇨ 10/87
205 II 1.0	TU9	10/87 ⇨ 09/98
205 II 1.1	H1B(TU1), HDZ(TU1M)	10/87 ⇨ 09/98
205 II 1.1 CJ	HDZ(TU1M)	10/89 ⇨ 12/94
205 II 1.3	TU24	01/91 ⇨ 12/94
205 II 1.3 Rallye	TU24	10/87 ⇨ 10/90
205 II 1.4	K1D(TU3A), K2B(TU3S), KDY(TU3M), KDZ(TU3M)	06/87 ⇨ 09/98
205 II 1.4 Cat	KAY(TU3CP)	08/87 ⇨ 09/93
205 II 1.4 CJ	K1D(TU3A), KDY(TU3M), KDZ(TU3M)	03/89 ⇨ 12/94
205 II 1.4 CJ Cat	KAY(TU3CP)	01/89 ⇨ 09/93
205 II 1.6 GTI	XU5JA	01/91 ⇨ 12/94
205 II 1.9 CTI	DFZ(XU9J1)	10/87 ⇨ 12/94
205 II 1.9 GTI	D6B(XU9JA), DKZ(XU9JAZ)	10/87 ⇨ 09/98
205 II 1.9 GTI Cat	DFZ(XU9J1)	10/87 ⇨ 07/94
309 I 1.4	K1D(TU3A), K2B(TU3S), KDY(TU3M), KDZ(TU3M)	08/88 ⇨ 08/89
309 II 1.1	H1B(TU1), HDZ(TU1M)	09/89 ⇨ 12/93
309 II 1.4	KDZ(TU3M), TU3, TU3F2	07/89 ⇨ 12/93
309 II 1.6	XU5JA	07/89 ⇨ 12/93
309 II 1.6 GTi	--	09/89 ⇨ 10/93
309 II 1.9 GTI	DKZ(XU9JAZ)	07/89 ⇨ 12/93
405 I 1.4	K5A(TU3), TU3A, TU3F2	01/87 ⇨ 12/92
405 I 1.9	DKZ(XU9JAZ)	06/87 ⇨ 08/92
405 I 1.9 4x4	DKZ(XU9JAZ)	06/87 ⇨ 07/92

FACET 9.6006

07

COILS

Adatt./Suitable:

BOSCH
F 000 ZS0 113

CITROËN
5970 42
97 531 206

DUCELLIER
2 526 009
2 526 009 A

MAGNETI MARELLI
060705738010
060717015012
607 057 01
607 057 38
BAE 507 AK

PEUGEOT
5970 42

ohm		ohm
0,68	Ø 6.3	6800

CITROËN		
BX 1.6	B2C	02/88 ⇨ 12/94
BX 1.9	159B, 159C, D6U, DKK	05/85 ⇨ 12/94
BX 1.9 GTi	D6D, D6K	01/87 ⇨ 01/92
BX 1.9 GTi 16V	159K, DFK	01/87 ⇨ 12/94
BX 15	B1E(XU51C)	01/87 ⇨ 05/92
BX 16	171A, 171B, 171C, 171D, 23DH, B1E(XU51C), BAY(XU5CP), BAZ(XU5CP), BDY(XU5M), BDZ(XU5M)	10/82 ⇨ 12/94
BX 16 E	BDY(XU5M), BDZ(XU5M)	05/89 ⇨ 02/93

CITROËN		
BX 19	159A, D2A(XU92C), D2C(XU92C), D2E, D6A(XU9J2), DKZ(XU9JA)	09/84 ⇨ 12/94
BX 19 Cat	DFZ(XU9J1)	07/86 ⇨ 12/94
BX 19 E 4x4	D2F	04/89 ⇨ 02/93
BX 19 GTi	D6A(XU9J2), DKZ(XU9JA)	07/86 ⇨ 02/93
BX 19 GTi 16V	D6C(XU9J4), DFW(XU9J4)	09/87 ⇨ 02/93
BX 19 GTi 4x4	DKZ(XU9JA)	06/88 ⇨ 02/93
C15 1.1	E1A	10/84 ⇨ 12/96
C15 1.3	G1A	07/87 ⇨ 05/88
PEUGEOT		
205 I 1.3	G1A	02/84 ⇨ 10/87
205 I 1.4	J2	01/83 ⇨ 12/90
205 I 1.5	Y2/K	02/84 ⇨ 10/87
205 II 1.1 XA	E1	07/87 ⇨ 10/88
205 II 1.2	F1	01/87 ⇨ 12/90
205 II 1.3	G1A	08/90 ⇨ 07/92
205 II 1.4	J2	01/91 ⇨ 12/94
309 I 1.1	E1	10/85 ⇨ 07/89
309 I 1.3	G1A, G2S	10/85 ⇨ 08/89
309 I 1.3 XL	--	09/86 ⇨ 08/89
309 I 1.5	Y2/K	06/87 ⇨ 12/89
309 I 1.6	--, J2	01/86 ⇨ 07/89
309 II 1.6	18EM, BDZ(XU5M), J2	07/89 ⇨ 12/93
309 II 1.9	XU92C	07/89 ⇨ 12/93
309 II 1.9 GTI 16V	D6C(XU9J4)	08/89 ⇨ 07/90
405 I 1.6	--, 18EM, B1E(XU51C), BDZ(XU5M)	01/87 ⇨ 12/92
405 I 1.6 4x4	BDZ(XU5M)	04/88 ⇨ 07/92
405 I 1.6 SRi 4x4	BDZ(XU5M)	04/88 ⇨ 07/92
405 I 1.9	D2C(XU92C), D6A(XU9J2), D6C(XU9J4), XU9J2/D6D	01/87 ⇨ 12/93
405 I 1.9 4x4	D6C(XU9J4)	06/87 ⇨ 07/92
405 I 1.9 Antipollution	XU92C	01/87 ⇨ 12/92
405 I 1.9 Sport MI-16	D6C(XU9J4), DFW(XU9J4Z)	06/87 ⇨ 11/92
405 I 1.9 SPort MI-16 4x4	DFW(XU9J4Z)	06/87 ⇨ 07/92
405 I 1.9 Trazione integrale	D6C(XU9J4)	06/87 ⇨ 07/92
405 II 1.6	18EM	08/92 ⇨ 05/97
405 II 1.9	XU92C	01/93 ⇨ 12/96

FACET 9.6007

05

COILS

Adatt./Suitable:

BOSCH
F 000 ZS0 115

CHRYSLER
T1031135

DUCELLIER
520 064
2 526 023
2 526 023 A
2 526 048 A

JEEP
T1031135

MAGNETI MARELLI
BAE 504 B

RENAULT
77 01 031 135

VOLVO
3287677
32876773

[00] **Eliminated on 25-11-2020. Please verify the availability through our local distributors**

- Eliminato il 25-11-2020. Verificare la disponibilità presso i nostri distributori
- Eliminé le 25-11-2020. Verifier la disponibilité auprès de nos distributeurs sur place
- Am 25-11-2020 gestrichen. Evtl. Verfügbarkeit bitte bei unseren Händlern prüfen
- Eliminado en fecha 25-11-2020. Verificar la disponibilidad a través de nuestros distribuidores locales

ohm		ohm
0,47	Ø 6.3	6000

ALPINE		
V6 TURBO	Z7U730, Z7U732, Z7U734	01/88 ⇨ 12/90
JEEP		
CHEROKEE II 2.5	EPE, U150, Y246	10/83 ⇨ 09/90

JEEP		
CHEROKEE II 2.5 4x4	EPE	10/86 ⇨ 09/90
CHEROKEE II 4.0 i	1Z7K	10/86 ⇨ 09/01
COMANCHE 2.5	EPE	10/86 ⇨ 09/90
COMANCHE 4.0 i	1Z7K	10/87 ⇨ 09/90
GRAND WAGONEER 4.0 i	1Z7K	10/86 ⇨ 09/90
WAGONEER 2.5	EPE	10/83 ⇨ 09/90
WAGONEER 4.0 i	1Z7K	10/86 ⇨ 09/90
WRANGLER 4.0	1Z7K	10/86 ⇨ 09/90
RENAULT		
18 1.4	847720, 847722	04/78 ⇨ 07/86
18 1.6 TS	A6M725, A6M726	05/82 ⇨ 07/86
18 2.0	J6R716	05/82 ⇨ 07/86
19 I 1.2	C1G730	01/88 ⇨ 12/92
19 I 1.2i	E7F	01/89 ⇨ 12/92
19 I 1.4	C2J772, C2J776, C3J710, E6J700, E6J701, E7J700	01/88 ⇨ 05/93
19 I 1.4 Cat	C3J710	01/89 ⇨ 04/92
19 I 1.7	F2N720, F2N721, F2N722, F2N724, F3N740, F3N741, F3N742, F3N743, F3N746	07/88 ⇨ 12/92
19 I 1.8 16V	F7P700, F7P704	06/89 ⇨ 09/92
19 II 1.2	E7F730	05/92 ⇨ 09/94
19 II 1.4	C3J710, E6J706, E7J706, E7J742, E7J745	01/92 ⇨ 12/95
19 II 1.7	F2N720, F2N721, F2N726, F2N727, F3N740, F3N741, F3N742, F3N743, F3N746	09/90 ⇨ 12/95
19 II 1.8	5F140FE, 8NA20S, F3P682, F3P704, F3P705, F3P706, F3P707, F3P708, F3P764, F3P765	04/92 ⇨ 06/96
19 II 1.8 16V	F7P704	04/92 ⇨ 06/96
21 1.4	C2J770, C2L714, C2L717	06/88 ⇨ 12/95
21 1.6	C2L	01/87 ⇨ 12/94
21 1.7	F2N710, F2N711, F2N712, F2N722, F2N750, F2N752, F2N754, F2N758, F2N786, F3N722, F3N723, F3N726	03/86 ⇨ 12/95
21 1.7 Cat	F3N726	05/88 ⇨ 06/93
21 2.0	14ZR, F2R702, J6R758, J6R793, J7R740, J7R747, J7R750, J7R751	03/86 ⇨ 06/94
21 2.0 4x4	14ZR, J7R740, J7R747	03/89 ⇨ 02/94
21 2.0 Turbo	J7R752, J7R756	04/87 ⇨ 10/92
21 2.0 Turbo 4x4	J7R752, J7R756	08/89 ⇨ 10/93
21 2.0 TXi	1SCRMP10U1, J7R740	07/89 ⇨ 05/93
21 2.2	J6T790, J6T791, J7T754, J7T755, J7T756	03/86 ⇨ 12/95
21 2.2 4x4	J7T754, J7T755	06/86 ⇨ 06/94
25 2.0	08A, J6R706, J6R707, J6R763, J7R722, J7R723	04/84 ⇨ 12/93
25 2.0 12V	74AR-FXE, 7CYQD80D-E3, J7R721	06/88 ⇨ 12/93
25 2.2	04TNV88-C, 74G69-S4M, J7T706, J7T707, J7T708, J7T715, J7T730, J7T731, J7T732	04/84 ⇨ 12/92
25 2.4 V6 Turbo	Z7U702	10/84 ⇨ 05/90
25 2.5 V6 Turbo	Z7U700	01/90 ⇨ 12/92
25 2.8 V6	Z7W700, Z7W701	06/87 ⇨ 02/90
25 2.8 V6 Injection	Z7W706, Z7W707, Z7W709	06/87 ⇨ 12/92
CLIO I 1.2	E5F710, E5F716, E7F700, E7F706, E7F708, E7F750	05/90 ⇨ 09/98
CLIO I 1.4	E6J712, E6J713, E6J718, E7J601, E7J710, E7J711, E7J716, E7J718, E7J719, E7J754, E7J756, E7J757	01/90 ⇨ 09/98
CLIO I 1.7	F2N770	01/91 ⇨ 12/93
CLIO I 1.8	0HR10DE, F3P710, F3P714, F3P754	08/90 ⇨ 09/98
CLIO I 1.8 16V	F7P720, F7P722	01/91 ⇨ 03/96
CLIO I 1.8 Rsi	F3P712, F3P758	01/93 ⇨ 09/98
CLIO I Williams	F7R700	01/94 ⇨ 09/98
ESPACE I 2.0	53AZ-FXE, J6R234, J6R236	07/84 ⇨ 12/90
ESPACE I 2.0 i	J7R760	01/89 ⇨ 12/90
ESPACE I 2.0 i Quadra	J7R760	03/88 ⇨ 12/92
ESPACE II 2.0	J7R768	01/91 ⇨ 10/96
ESPACE II 2.2	J7T772, J7T773, J7T776	01/91 ⇨ 10/96
ESPACE II 2.2 4x4	J7T772, J7T773	03/91 ⇨ 12/96
ESPACE II 2.8 V6	Z7W712, Z7W713, Z7W717	01/91 ⇨ 10/96
EXPRESS 1.2	C1G	01/85 ⇨ 10/90
EXPRESS 1.4	C1J, C2J, E6J/E7J	01/85 ⇨ 10/90
FUEGO 1.6 [USA] R136B	A7L	01/84 ⇨ 12/86
LAGUNA I 1.8	F3P678, F3P720, F3P724	11/93 ⇨ 03/01
LAGUNA I 2.0	6Z7U730, F3R722	11/93 ⇨ 03/01
MASTER I 2.0	J5R718, J5R728	06/85 ⇨ 12/95
MASTER I 2.2	J7T788	08/93 ⇨ 02/98
MASTER I 28-35 2.0	J5R718	10/86 ⇨ 07/98
MASTER I 30 2.2	J7T782, J7T788	08/80 ⇨ 07/98
MEGANE I 1.4	E7J764	09/96 ⇨ 08/03
MEGANE I 1.4 e	E7J764	01/96 ⇨ 08/03
MEGANE I 1.4 Eco	E7J624	01/96 ⇨ 03/99
MEGANE SCÉNIC I 1.4 i	E7J764	01/97 ⇨ 09/99
RAPID 1.2	C1G726	09/91 ⇨ 08/93
RENAULT		
RAPID 1.4	C1J768, C1J780, C2J784, E6J738, E7J720, E7J724, E7J726, E7J728, E7J770, E7J771, E7J773	07/85 ⇨ 03/98
RAPID 1.4 Cat	C3J702, C3J760, C3J762	08/88 ⇨ 03/98
RAPID 1.4 RN	E6J734	09/91 ⇨ 08/93
SAFRANE I 2.0	0LJY, J7R732, J7R738, J7R739	08/92 ⇨ 09/96
SAFRANE I 2.0 12V	J7R734, J7R735	04/92 ⇨ 07/96
SAFRANE I 2.2	1MR479QB, J7T761, J7T762	04/92 ⇨ 07/96
SAFRANE I 3.0	Z7X723	02/93 ⇨ 06/96
SAFRANE I 3.0 Biturbo 4x4	Z7X726	02/93 ⇨ 07/96
SAFRANE I 3.0 V6	Z7X721, Z7X722, Z7X723, Z7X753	12/92 ⇨ 07/96
SAFRANE I 3.0 V6 4x4	Z7X721, Z7X722, Z7X723	12/92 ⇨ 07/96
SAFRANE II 3.0 V6	6216K4FU, Z7X755	07/96 ⇨ 12/00
SUPER 5 1.2	C1G702, C1G720, C1G722	01/87 ⇨ 12/96
SUPER 5 1.4	C1J768, C1J780, C1J788, C2J700, C2J780, C2J781, C2J782, C2J784, C2J788, C2J789, C2J798, C3J700	10/84 ⇨ 08/90
SUPER 5 1.4 Cat	C3J700, C3J702, C3J760	10/85 ⇨ 12/96
SUPER 5 1.4 Turbo	C1J782, C1J784, C1J788	04/85 ⇨ 08/90
SUPER 5 1.7	F2N740, F2N742, F3N716, F3N717	10/86 ⇨ 03/95
SUPER 5 1.7 i	F3N702	10/86 ⇨ 08/91
TRAFIC I 1.7	F1N720	05/89 ⇨ 08/94
TRAFIC I 2.0	J5R716	05/89 ⇨ 08/90
TRAFIC I 2.0 RWD	J5R726	05/89 ⇨ 10/97
TRAFIC I 2.2	J7T600, J7T780	05/89 ⇨ 04/98
TRAFIC I 2.2 4x4	J7T600, J7T780	05/89 ⇨ 04/98
VOLVO		
340-360 1.3	B13, B13.4E	08/88 ⇨ 12/90
340-360 1.4	B14.3E, B14.4E, B14.4ED, B14.40, B14.4S	08/82 ⇨ 07/91
340-360 1.7	B172K	08/85 ⇨ 07/91
340-360 2.0	B200E, B200EA, B200F, B200K	08/84 ⇨ 07/90
440 1.6	B16F	09/88 ⇨ 12/96
440 1.7	B18E, B18EP, B18F, B18FP, B18K, B18KD, B18KP, B18KPD	08/88 ⇨ 12/96
440 1.8	B18U	08/91 ⇨ 12/96
440 2.0	B20F	08/92 ⇨ 07/96
460 1.6	B16F	07/92 ⇨ 07/96
460 1.7	B18EP, B18FP, B18K, B18KD, B18KP	09/88 ⇨ 07/96
460 1.8	B18U	08/91 ⇨ 07/96
460 2.0	B20F	08/92 ⇨ 07/96
480 1.7	B18E, B18ED, B18EP, B18F, B18FP	04/86 ⇨ 07/96
480 2.0	B20F	08/92 ⇨ 09/95

FACET **9.6008** 07

COILS

Adatt./Suitable:

BOSCH
0 986 221 027

FIAT
7582152
7663177
7698431
7746152
7746154

LANCIA
7663177

MAGNETI MARELLI
060705604010
060717017012
607 056 04
BAE 506
BAE 506 D

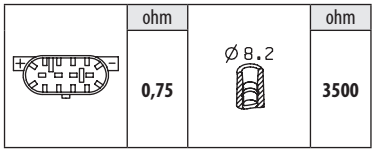

FIAT		
FIORINO II 1.0 iE	156A2.246	11/92 ⇨ 04/96
PALIO 1.1	178B9.033	07/97 ⇨ 10/03
PANDA I 1.1	156C.046	05/91 ⇨ 03/95
PANDA I 1000 4x4	141C2.000, 156A2.246	05/86 ⇨ 12/94
PANDA I 1000 Fire [CHE]	156A2.146	11/87 ⇨ 04/91
PANDA I 1000 i.e	156A2.246	08/92 ⇨ 02/04
PANDA I 1000 i.e. Cat	141C2.000, 156A2.246	10/87 ⇨ 08/98
PANDA I 1100 i.e.	156C.046	01/86 ⇨ 04/91
PANDA I 1100 Trekking 4x4	156C.046	10/91 ⇨ 07/04
TEMPRA 1.4 i.e.	159A2.000, 160A1.046	04/90 ⇨ 08/96
TIPO I 1.1	160A3.000	01/88 ⇨ 10/91
TIPO I 1.4	160A1.000	07/87 ⇨ 12/89
TIPO I 1.4 i.e.	159A2.000	05/89 ⇨ 04/95
UNO 45 1.0	156A2.000, 156A2.100	06/86 ⇨ 12/93
UNO 45 i.e. 1.0	156A2.246	10/84 ⇨ 10/95
UNO 50 1.1	156C.046	01/90 ⇨ 12/93
UNO 50 i.e. 1.1	146C3.000	06/92 ⇨ 12/93
UNO 60 1.1	146A4.048, 146A6.000, 160A3.000	02/88 ⇨ 12/92
UNO Mondo 1.0	146A2.166	01/98 ⇨
UNO Mondo 1.0 [IND]	146A2.166	01/98 ⇨
LANCIA		
Y10 1.0 Fire	156A2.100	06/85 ⇨ 06/91
Y10 1.0 Fire Catalytic-Conv	156A2.246	10/87 ⇨ 02/92
Y10 1.0 Fire Trazione integrale	156A2.000, 156A2.100, 156A2.246	12/86 ⇨ 02/92
Y10 1.1 i.e Fire	156C.000	08/89 ⇨ 06/92
Y10 1.1 i.e Fire Trazione integrale	156C.000	08/89 ⇨ 06/92
Y10 1.1 i.e. Fire	156C.046	07/89 ⇨ 09/95

FACET 9.6009 — 07

COILS

Adatt./Suitable:

DELCO REMY
3 474 227
GENERAL MOTORS
03 474 227
3 474 227
OPEL
12 08 035

[00] **Eliminated on 23-02-2022. Please verify the availability through our local distributors**

- Eliminato il 23-02-2022. Verificare la disponibilità presso i nostri distributori
- Eliminé le 23-02-2022. Verifier la disponibilité auprès de nos distributeurs sur place
- Am 23-02-2022 gestrichen. Evtl. Verfügbarkeit bitte bei unseren Händlern prüfen
- Eliminado en fecha 23-02-2022. Verificar la disponibilidad a través de nuestros distribuidores locales

6.4	Ø 4	ohm	Ø 8.2	ohm
+ -		0,68		8300

OPEL		
ASCONA C 1.6	16N	09/81 ⇨ 09/87
ASCONA C 1.6 S	16SH	09/81 ⇨ 08/86
ASCONA C 1.8 i	18E	09/82 ⇨ 08/86
KADETT E 1.8 i	18E	09/84 ⇨ 08/86

FACET 9.6010 — 07

COILS

Adatt./Suitable:

[00] **Eliminated on 24-02-2021. Please verify the availability through our local distributors**

- Eliminato il 24-02-2021. Verificare la disponibilità presso i nostri distributori
- Eliminé le 24-02-2021. Verifier la disponibilité auprès de nos distributeurs sur place
- Am 24-02-2021 gestrichen. Evtl. Verfügbarkeit bitte bei unseren Händlern prüfen
- Eliminado en fecha 24-02-2021. Verificar la disponibilidad a través de nuestros distribuidores locales

[1006] **After depletion of stock this part is replaced by:**

- Esaurite le scorte questo pezzo sarà sostituito da:
- Après épuisement du stock, cette pièce est remplaceé par:
- Nach Vorraterschöpfung wird ersetzt durch:
- Despues agotamiento stock, sera sustituido por:

9.6241

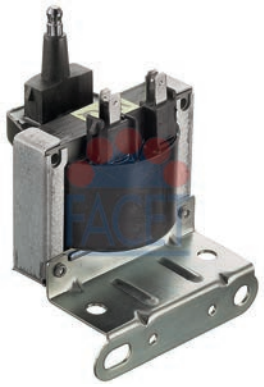

6.4	ohm	Ø 6.3	ohm
+ -	0,41		5000

FACET 9.6011 — 07

COILS

Adatt./Suitable:

DELCO REMY
3 474 221
GENERAL MOTORS
3 474 221
OPEL
12 08 036

[03] **Supplied until depletion**

- Fornibile fino ad esaurimento delle scorte
- Fourni jusqu'à épuisement du stock
- Lieferbar solange vorrat reicht
- Suministrado hasta el stock termina

6.4	ohm	Ø 6.3	ohm
+ -	0,41		5000

OPEL		
ASCONA C 1.3 N	13N	09/81 ⇨ 08/86
ASCONA C 1.3 S	13S	09/81 ⇨ 08/88
ASCONA C 1.6	16SV	09/86 ⇨ 08/88
ASCONA C 1.6 i Cat	C16LZ, C16NZ	09/86 ⇨ 08/88

FACET 9.6012 — 07

COILS

Adatt./Suitable:

BMW
1 720 166
1 720 877
12 13 1 720 166
12 13 1 720 877
12 13 1 742 925
17 20 1 66.2
BOSCH
0 221 502 009

+ M6	- M5	ohm	Ø 4	ohm
		0,36		9000

BMW		
5 II 530 i	--	01/84 ⇨ 12/88
5 III M5	S38B36(366S1)	09/88 ⇨ 03/92
5 III M5 Cat	S38B36(366S1)	09/88 ⇨ 03/92
7 II 750 i, iL V12	M70B50(5012A)	09/87 ⇨ 09/94
8 850 CSi	S70B56(56121)	11/92 ⇨ 12/96
8 850 i, Ci	M70B50(5012A)	01/90 ⇨ 08/94
Z1 2.5	M20B25(256K1)	06/88 ⇨ 06/91

FACET 9.6025 — 07

COILS

Adatt./Suitable:

AUDI
211 905 115 D
251 905 115 A
BOSCH
0 221 122 349
0 221 122 350
0 221 122 386
SEAT
211 905 115 D
VW
211 905 115 D
251 905 115 A

960 **Dry (epoxy) coil replacing original oil-bath coil version**
- Bobina (resinizzata) sostituente originale a bagno d'olio
- Bobine seche, remplaçant la bobine d'origine à bain d'huile
- Trockenspule, die die Originale im Ölbad ersetzt
- Bobina seca, sustituye modelo original con baño de aceite

–	+	ohm		ohm
M5	M5	0,63	Ø 4	3500

AUDI		
80 II 1.3	EP	09/78 ⇨ 07/86
80 II 1.6	DT, JU, SA, WV	08/78 ⇨ 03/87
80 II 1.8	DS, JN, SF	01/83 ⇨ 08/86
80 II 1.8 CC quattro	JN, JV	08/84 ⇨ 08/86
80 II 1.8 GTE	DZ, MU, PV	06/84 ⇨ 03/87
80 II 2.0	HP, JS	10/83 ⇨ 09/84
80 II 2.0 quattro	JS	10/83 ⇨ 09/84
90 I 1.8	JN	06/84 ⇨ 03/87
90 I 2.0	HP, JL, JS, SK	10/84 ⇨ 03/87
90 I 2.0 quattro	JS	08/84 ⇨ 08/86
90 I 2.2	9C54, HY, KX	10/84 ⇨ 03/87
90 I 2.2 E quattro	9C54	11/84 ⇨ 03/87
90 II 2.2 E quattro	9C54	04/87 ⇨ 09/91
100 III 2.0	KP	08/84 ⇨ 12/87
100 III 2.0 E	KP	01/85 ⇨ 12/87
100 III 2.2	KZ	10/84 ⇨ 09/86
200 II 2.2	KU	08/84 ⇨ 07/85
COUPE 2.2 GT	9C54	09/84 ⇨ 10/88
COUPE 2.2 quattro	9C54, JT	10/84 ⇨ 10/88
SEAT		
TOLEDO I 1.8 16V	KR, PL	05/91 ⇨ 03/99
TOLEDO I 1.8 GT	KR	05/91 ⇨ 11/92
TOLEDO I 1.8 i	RP	05/91 ⇨ 12/96
VW		
PASSAT II 1.6	DT	08/80 ⇨ 03/88
PASSAT II 1.8	DS	01/83 ⇨ 03/88
PASSAT II 1.8 Syncro	DS	01/86 ⇨ 03/88
PASSAT II 2.0	JS	08/83 ⇨ 03/88
PASSAT II 2.0 Syncro	JS	05/84 ⇨ 03/88
POLO II 1.0	AAK, HZ	01/85 ⇨ 09/94
POLO II 1.0 Cat	AAK	08/89 ⇨ 09/94
POLO II 1.3	3F, GK	09/82 ⇨ 09/94
POLO II 1.3 Cat	2G, 3F, MH, NZ	07/87 ⇨ 09/94
POLO II 1.3 G40	PY	01/87 ⇨ 08/90
JETTA II 1.0	HZ	08/85 ⇨ 10/91
JETTA II 1.3	MH, NU	01/84 ⇨ 12/87
JETTA II 1.3 Cat	2G, MH, NZ	06/87 ⇨ 12/91
JETTA II 1.6	ABN, EZ, EZA, HM, PN, RF	12/83 ⇨ 07/92
JETTA II 1.8	EV, GU, GX, PB, RD, RH, RV	01/84 ⇨ 10/91
JETTA II 1.8 16V	KR, PL	08/86 ⇨ 10/91
JETTA II 1.8 Cat	GX, PF, RP	01/87 ⇨ 10/91
JETTA II 1.8 G60	PG	04/90 ⇨ 07/91
JETTA II 1.8 Syncro	3E82, GU, GX, RH, RP	08/85 ⇨ 07/91
JETTA II 1.8i GT	GZ	12/83 ⇨ 07/88
CADDY I 1.8	JH	08/85 ⇨ 07/92
CORRADO 1.8 G60	PG	09/88 ⇨ 09/93
DERBY 1.3	GK, HK	09/82 ⇨ 12/84
GOLF I 1.6	EW, HN	08/83 ⇨ 04/92
GOLF I 1.8	2H, DX, EX, JH, KT	08/82 ⇨ 04/93

VW		
GOLF II 1.0	HZ	08/85 ⇨ 10/91
GOLF II 1.3	MH, NU	08/83 ⇨ 12/87
GOLF II 1.3 Cat	2G, NZ	06/86 ⇨ 12/92
GOLF II 1.6	ABN, EZ, PN, RF	08/83 ⇨ 12/92
GOLF II 1.6 [CHE] [SWE]	HM	08/83 ⇨ 07/88
GOLF II 1.6 G	EZA, PN	08/86 ⇨ 07/91
GOLF II 1.8	GU, GX, RH, RV	08/84 ⇨ 10/91
GOLF II 1.8 [CHE] [SWE]	HV	04/84 ⇨ 07/87
GOLF II 1.8 GTI	EV, PB, RD	08/83 ⇨ 10/91
GOLF II 1.8 GTI 16V	KR, PL	02/86 ⇨ 10/91
GOLF II 1.8 GTI Cat	PF	01/87 ⇨ 10/91
GOLF II 1.8 GTI G60	PG	04/90 ⇨ 07/91
GOLF II 1.8 GTI G60 Syncro	1H, PG	08/88 ⇨ 12/91
GOLF II 1.8 i	RP	08/87 ⇨ 07/91
GOLF II 1.8 i Cat	GX, RP	08/87 ⇨ 10/91
GOLF II 1.8 i Cat Syncro	RP	08/87 ⇨ 10/91
GOLF II 1.8 Rallye syncro	1H, PG	08/88 ⇨ 07/91
GOLF II 1.8 Syncro	3E82, GU, GX, RH	02/86 ⇨ 07/91
GOLF II 1.8i GTI [CHE] [SWE]	GZ	01/84 ⇨ 07/87
GOLF II 1.8i GTI [SWE]	GZ	08/87 ⇨ 07/88
LT I 2.4 i	1E	08/89 ⇨ 06/96
PASSAT III 1.6	1F, EZ	04/88 ⇨ 07/92
PASSAT III 1.8	KR, PB, PF, RP	02/88 ⇨ 05/97
PASSAT III 1.8 16V	KR	04/88 ⇨ 12/89
PASSAT III 1.8 G60 Syncro	PG	08/88 ⇨ 05/97
PASSAT III 1.8 GL	KR	08/91 ⇨ 09/93
QUANTUM 1.7	--	01/85 ⇨ 12/87
QUANTUM 2.1	--	01/81 ⇨ 12/84
SANTANA 1.6	DT	08/81 ⇨ 12/84
SANTANA 1.8	DS	01/83 ⇨ 12/84
SANTANA 2.0	JS	08/83 ⇨ 12/84
SCIROCCO II 1.6	EW, EWA, HN, RE	01/83 ⇨ 07/90
SCIROCCO II 1.8	DX, EX, JH, KT	08/82 ⇨ 07/92
SCIROCCO II 1.8 16V	KR, PL	10/85 ⇨ 07/92
TRANSPORTER III 1.9	DF, DG	08/82 ⇨ 07/92
TRANSPORTER III 1.9 Syncro	DG	11/84 ⇨ 07/92
TRANSPORTER III 2.1	DJ, MV, SR	08/84 ⇨ 07/92
TRANSPORTER III 2.1 Cat	MV	06/89 ⇨ 07/92
TRANSPORTER III 2.1 i	SS	07/89 ⇨ 07/92
TRANSPORTER III 2.1 Syncro	DJ, MV, SR	08/85 ⇨ 07/92

FACET 9.6026 — 07

COILS

Adatt./Suitable:

AUDI
035 905 105 A
BOSCH
0 221 118 398
0 221 122 334
0 221 122 357
0 221 122 358
0 221 122 399
0 221 122 400
FIAT
7612954
LANCIA
7612954
VW
035 905 105 A
191 905 115 A

960 **Dry (epoxy) coil replacing original oil-bath coil version**
- Bobina (resinizzata) sostituente originale a bagno d'olio
- Bobine seche, remplaçant la bobine d'origine à bain d'huile
- Trockenspule, die die Originale im Ölbad ersetzt
- Bobina seca, sustituye modelo original con baño de aceite

–	+	ohm		ohm
M5	M5	0,68	Ø 4	7200

AUDI		
200 II 2.2 Turbo quattro	MC	01/85 ⇨ 12/91
LANCIA		
THEMA 2850 V6 i.e.	834E.146	06/88 ⇨ 05/92
THEMA 8.32	F105L	09/87 ⇨ 05/89

VW		
POLO II 1.0	HZ	01/85 ⇨ 09/94
POLO II 1.3	GK	09/82 ⇨ 09/89
POLO II 1.3 Cat	2G, MH, NZ	07/87 ⇨ 09/94
JETTA II 1.0	HZ	08/85 ⇨ 10/91
JETTA II 1.3	MH	01/84 ⇨ 06/87
JETTA II 1.3 Cat	2G, MH, NZ	06/87 ⇨ 12/91
JETTA II 1.6	EZ, PN, RF	01/84 ⇨ 07/92
JETTA II 1.8 16V	PL	08/86 ⇨ 10/91
JETTA II 1.8 Syncro	3E82, GU	08/87 ⇨ 07/91
CADDY I 1.8	JH	08/85 ⇨ 07/92
CORRADO 1.8 16V	KR	04/89 ⇨ 07/92
GOLF I 1.6	EW, HN	08/83 ⇨ 04/92
GOLF I 1.8	2H, DX, EX, JH, KT	08/82 ⇨ 04/93
GOLF II 1.0	HZ	08/85 ⇨ 10/91
GOLF II 1.3	MH	08/83 ⇨ 06/87
GOLF II 1.3 Cat	2G, NZ	06/86 ⇨ 12/92
GOLF II 1.6	EZ, PN, RF	08/83 ⇨ 12/92
GOLF II 1.6 G	PN	08/86 ⇨ 07/91
GOLF II 1.8	GU	08/84 ⇨ 10/91
GOLF II 1.8 GTI 16V	PL	02/86 ⇨ 10/91
GOLF II 1.8 Syncro	3E82, GU	02/86 ⇨ 07/91
PASSAT III 1.6	1F, EZ	04/88 ⇨ 07/92
PASSAT III 1.8	KR	08/91 ⇨ 09/93
PASSAT III 1.8 16V	KR	04/88 ⇨ 12/89
PASSAT III 1.8 GL	KR	08/91 ⇨ 09/93
QUANTUM 2.1	--	01/85 ⇨ 12/89
SCIROCCO II 1.6	EW, RE	01/83 ⇨ 07/90
SCIROCCO II 1.8	DX, EX, JH, KT	08/82 ⇨ 07/92
SCIROCCO II 1.8 16V	KR, PL	10/85 ⇨ 07/92
TRANSPORTER III 1.9	DF, DG	08/82 ⇨ 07/92
TRANSPORTER III 1.9 Syncro	DG	11/84 ⇨ 07/92
TRANSPORTER III 2.1	DJ	08/84 ⇨ 07/92
TRANSPORTER III 2.1 Syncro	DJ	01/86 ⇨ 07/92

FACET 9.6027 — 07

COILS

Adatt./Suitable:

AUDI
811 905 115
BOSCH
0 221 122 379
0 221 122 380
VW
811 905 115

960 **Dry (epoxy) coil replacing original oil-bath coil version**
- Bobina (resinizzata) sostituente originale a bagno d'olio
- Bobine seche, remplaçant la bobine d'origine à bain d'huile
- Trockenspule, die die Originale im Ölbad ersetzt
- Bobina seca, sustituye modelo original con baño de aceite

+	–	ohm		ohm
M6	M5	0,63	Ø 4	3500

AUDI		
80 II 1.3	EP	09/78 ⇨ 07/86
80 II 1.6	DT, JU, SA	08/78 ⇨ 03/87
80 II 1.8	DS, JN, SF	01/83 ⇨ 08/86
80 II 1.8 CC quattro	JN, JV	08/84 ⇨ 08/86
80 II 1.8 GTE	DZ, MU, PV	06/84 ⇨ 03/87
80 II 2.0	HP, JS	10/83 ⇨ 09/84
80 II 2.0 quattro	JS	10/83 ⇨ 09/84
80 III 1.4	SE	08/86 ⇨ 07/88
80 III 1.6	ABB, PP, RN, RNA	09/86 ⇨ 10/91
80 III 1.8	RU, SD	09/86 ⇨ 01/90
80 III 1.8 E	DZ	06/86 ⇨ 08/91
80 III 1.8 E quattro	DZ	09/86 ⇨ 08/91
80 III 1.8 quattro	SD	09/86 ⇨ 08/90
80 III 1.8 S	JN, JV, NE, PM, SF	08/86 ⇨ 10/91
80 III 1.8 S quattro	JN, NE, PM, SF	09/86 ⇨ 09/91
80 III 2.0	AAD	10/90 ⇨ 08/91

AUDI		
80 IV 1.6	ABB	03/92 ⇨ 05/93
90 I 1.8	JN	06/84 ⇨ 03/87
90 I 2.0	HP, JL, JS, SK	10/84 ⇨ 03/87
90 I 2.0 quattro	JS	08/84 ⇨ 08/86
90 I 2.2	9C54, HY, KX	10/84 ⇨ 03/87
90 I 2.2 E quattro	9C54	11/84 ⇨ 03/87
90 II 2.0	PS	07/88 ⇨ 09/91
90 II 2.2 E	9C54	04/87 ⇨ 07/91
90 II 2.2 E quattro	9C54	04/87 ⇨ 09/91
100 III 1.8	DS, JW, NP, SH	08/83 ⇨ 12/90
100 III 1.8 Cat	4B, PH	03/85 ⇨ 11/90
100 III 1.8 Cat quattro	4B, PH	08/85 ⇨ 11/90
100 III 1.8 quattro	NP, SH	10/84 ⇨ 07/90
100 III 2.0	KP	08/84 ⇨ 12/87
100 III 2.0 E	KP	01/85 ⇨ 12/87
100 III 2.2 Cat	KU	06/89 ⇨ 11/90
100 III 2.2 Cat quattro	KU	06/89 ⇨ 11/90
100 IV 1.6	ABB	03/92 ⇨ 07/93
COUPE 1.8	DZ	08/89 ⇨ 07/91
COUPE 2.2	9C54	11/88 ⇨ 07/91
COUPE 2.2 GT	9C54	09/84 ⇨ 10/88
COUPE 2.2 quattro	9C54, JT	10/84 ⇨ 07/91

FACET 9.6032

07

COILS

Adatt./Suitable:

AUDI
211 905 115 B

BOSCH
0 221 102 088
0 221 122 022
0 221 122 023

VW
211 905 115 B
211 905 115 C

[03] **Supplied until depletion**
- Fornibile fino ad esaurimento delle scorte
- Fourni jusqu'à épuisement du stock
- Lieferbar solange vorrat reicht
- Suministrado hasta el stock termina

[960] **Dry (epoxy) coil replacing original oil-bath coil version**
- Bobina (resinizzata) sostituente originale a bagno d'olio
- Bobine seche, remplaçant la bobine d'origine à bain d'huile
- Trockenspule, die die Originale im Ölbad ersetzt
- Bobina seca, sustituye modelo original con baño de aceite

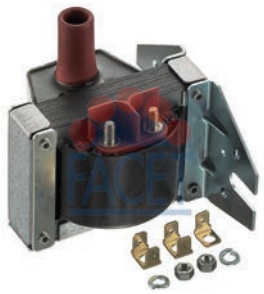

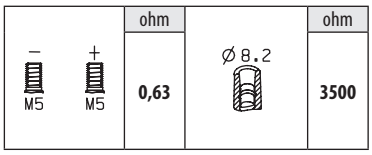

AUDI		
80 II 1.6	WV	08/78 ⇨ 07/86
100 III 1.8	DR	08/82 ⇨ 12/87
100 III 1.9	WH	08/82 ⇨ 07/84
VW		
PASSAT II 1.3	79SU16	08/80 ⇨ 07/86
PASSAT II 1.6	DT	08/80 ⇨ 03/88
PASSAT II 1.9	WN	01/81 ⇨ 07/83
PASSAT II 2.2	KX	01/85 ⇨ 03/88
JETTA II 1.8	EV, GU, GX	01/84 ⇨ 10/91
JETTA II 1.8 Cat	GX	08/87 ⇨ 10/91
JETTA II 1.8i GT	GZ	12/83 ⇨ 07/88
GOLF I 1.6	EW, HN	08/83 ⇨ 04/92
GOLF I 1.8	2H, DX, EX, JH, KT	08/82 ⇨ 04/93
GOLF II 1.8	GU, GX	08/84 ⇨ 10/91
GOLF II 1.8 [CHE] [SWE]	HV	04/84 ⇨ 07/85
GOLF II 1.8 GTI	EV	08/83 ⇨ 10/91
GOLF II 1.8 i Cat	GX	08/87 ⇨ 10/91
GOLF II 1.8i GTI [CHE] [SWE]	GZ	01/84 ⇨ 07/87
GOLF II 1.8i GTI [SWE]	GZ	08/87 ⇨ 07/88

VW		
POLO II 1.3	GK	09/82 ⇨ 09/89
SANTANA 1.9	WN	08/81 ⇨ 07/83
SCIROCCO II 1.3	GF	08/80 ⇨ 12/83
SCIROCCO II 1.6	EW, EWA, HN	01/83 ⇨ 12/89
SCIROCCO II 1.8	DX, EX, JH, KT	08/82 ⇨ 07/92
SCIROCCO II 1.8 16V	KR	10/85 ⇨ 07/89

FACET 9.6035

07

COILS

Adatt./Suitable:

BOSCH
F 000 ZS0 212

DENSO
029700-6700

FORD
1 649 067
6 503 279
6 503 280
88SF-12029A-1A
88SF-12029A-2A
928F-12029-CA
96BF-12024A-1B
E8TZ-12029-A
E9TF-12029-AA

HITACHI
138803

MAGNETI MARELLI
060717036012

MAZDA
FSD7-18-100

Motorcraft
DG 435
EDG 43

[03] **Supplied until depletion**
- Fornibile fino ad esaurimento delle scorte
- Fourni jusqu'à épuisement du stock
- Lieferbar solange vorrat reicht
- Suministrado hasta el stock termina

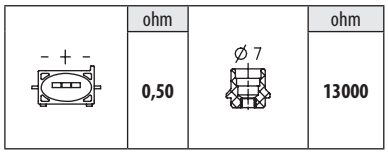

FORD		
ESCORT IV 1.3	J6A, JBD	01/95 ⇨ 08/97
ESCORT IV 1.4	F4B, F6F, F6G	07/90 ⇨ 08/00
ESCORT V 1.4	F4B, F6F, F6G, FUH	07/90 ⇨ 01/95
ESCORT V 1.4 i	F4B	07/93 ⇨ 01/95
ESCORT V 1.6	LJF, LUJ, LUK	07/90 ⇨ 08/93
ESCORT VI 1.4	F4B, F6B, F6D, FUH	01/95 ⇨ 12/99
FIESTA III 1.4	FUG, FUJ	03/89 ⇨ 12/95
FIESTA III 1.4 Cat	F4A	03/89 ⇨ 12/95
FIESTA III 1.6	LUH	01/89 ⇨ 01/94
FIESTA III 1.6 Turbo	LHA	03/90 ⇨ 10/92
FIESTA III 1.6 XR2i	LJC, LJD	03/89 ⇨ 01/94
ORION II 1.4	F6F, F6G, HL14L-FUH	07/90 ⇨ 12/93
ORION II 1.6	LUJ, LUK	07/90 ⇨ 12/92
ORION II 1.6 i	HL16EFI-LJE, LJF	07/90 ⇨ 09/92
SIERRA II 1.6 i	L6B	10/89 ⇨ 02/93
SIERRA II 1.8 i	HL18CFi-R6A	01/92 ⇨ 12/93
MAZDA		
626 VI 1.8	FP, FP9A, FPY3	05/97 ⇨ 10/02
626 VI 2.0	FS	05/97 ⇨ 10/02

FACET 9.6040

07

COILS

Adatt./Suitable:

BOSCH
F 000 ZS0 111

DUCELLIER
2 526 049 A

GENERAL MOTORS
03 474 283
3 474 283
90 449 739
90 510 386

HITACHI
138780
2508780

HOLDEN
90449739

MAGNETI MARELLI
060717011012

OPEL
12 08 003
12 08 054
12 08 070
3474283
90449739
90510386

[03] **Supplied until depletion**
- Fornibile fino ad esaurimento delle scorte
- Fourni jusqu'à épuisement du stock
- Lieferbar solange vorrat reicht
- Suministrado hasta el stock termina

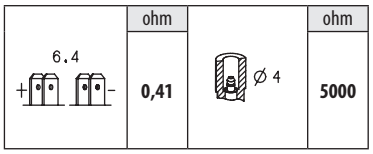

HOLDEN		
BARINA 1.4 i	C14NZ	04/94 ⇨ 07/97
BARINA_SB 1.2i	C12NZ	04/94 ⇨ 07/97
COMBO 1.4 i	C14NZ	03/96 ⇨ 07/97
COMBO_SB 1.4i	C14NZ	04/94 ⇨ 07/97
OPEL		
ASTRA F 1.4	14SE	09/92 ⇨ 09/98
ASTRA F 1.4 i	C14NZ	09/91 ⇨ 01/05
ASTRA F 1.4 Si	C14SE	03/92 ⇨ 03/01
ASTRA F 1.6	16LZ2, 16NZ2	09/94 ⇨ 09/98
ASTRA F 1.8 i	C18NZ	09/91 ⇨ 09/98
COMBO B 1.2	C12NZ	07/94 ⇨ 10/01
COMBO B 1.4	C14NZ	07/94 ⇨ 10/01
CORSA A 1.2 i	C12NZ	09/89 ⇨ 03/93
CORSA A 1.4 i	C14NZ	01/85 ⇨ 03/93
CORSA A 1.4 Si	C14SE	09/91 ⇨ 03/93
CORSA A 1.6 GSI	E16SE	05/88 ⇨ 03/92
CORSA B 1.2 i	12NZ, C12NZ	03/93 ⇨ 09/00
CORSA B 1.4 i	C14NZ	03/93 ⇨ 09/00
KADETT E 1.4 i	C14NZ	01/90 ⇨ 07/94
KADETT E 1.6	16SV	09/86 ⇨ 12/91
KADETT E 1.6 i	16SV	07/89 ⇨ 02/93
KADETT E 1.6 S	16S, 16SV	09/84 ⇨ 08/91
KADETT E 1.8	18SE	01/86 ⇨ 08/91
KADETT E 1.8 i	C18NZ	06/85 ⇨ 05/92
OMEGA A 1.8	18SEH	09/86 ⇨ 03/94
OMEGA A 1.8 S	18SV	09/86 ⇨ 03/94
VECTRA A 1.6	16SV, C16LZ2	09/88 ⇨ 07/93
VECTRA A 1.6 i	C16NZ2	09/88 ⇨ 11/95
VECTRA A 1.6 i Cat	C16NZ2	09/88 ⇨ 11/95
VECTRA A 1.6 S	16SV	09/88 ⇨ 05/93
VECTRA A 1.8 i	18SV	09/88 ⇨ 10/90
VECTRA A 1.8 i Cat	C18NZ	03/90 ⇨ 11/95
VECTRA A 1.8 S	18SV	09/89 ⇨ 10/90
VECTRA B 1.6 i	16LZ2	10/95 ⇨ 07/03
VAUXHALL		
ASTRA III 1.4 i	C14NZ, C14SE	03/91 ⇨ 09/98
ASTRA III 1.8 i	C18NZ	09/91 ⇨ 09/98
ASTRAVAN I 1.4 i	C14NZ	09/91 ⇨ 08/95
COMBO B 1.2	C12NZ	07/94 ⇨ 10/01
COMBO B 1.4	C14NZ	07/94 ⇨ 10/01

VAUXHALL		
CORSA B 1.2 i	C12NZ	03/93 ⇨ 09/00
CORSA B 1.4 i	C14NZ	03/93 ⇨ 09/00
CORSAVAN I 1.4 i	C14NZ	01/94 ⇨ 09/00

FACET 9.6046

05

COILS

Adatt./Suitable:

ALFA ROMEO
46548037
60805420
60809492

BOSCH
F 000 ZS0 103

CHAMPION
BAE 800 B

FIAT
46543562
46548037
60805420
60809492
60815150
7626232
7672018

HITACHI
138730
2508730

INNOCENTI
46543562

LANCIA
46543562
46548037
60805420
60809492
7626232
7672018

MAGNETI MARELLI
060708038010
060717029012
060780002010
607 080 38
BAE 800 AK
BAE 800 B
BAE 800 DK

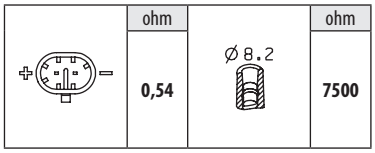

ALFA ROMEO		
33 II 1.4 i.e.	AR30753	06/91 ⇨ 09/94
145 1.4 i.e.	AR33501	07/94 ⇨ 12/96
146 1.4 i.e.	AR33501	12/94 ⇨ 12/96
155 2.0 16V Turbo Q4	AR67203	01/92 ⇨ 12/97
FIAT		
CINQUECENTO 0.7	170A.000, 171A.000	12/91 ⇨ 02/98
CINQUECENTO 0.7 i	170A.046	07/94 ⇨ 01/98
CINQUECENTO 0.9	170A1.000	07/91 ⇨ 12/93
CINQUECENTO 0.9 i.e.	170A1.046	07/91 ⇨ 09/94
CINQUECENTO 0.9 i.e. S	1170A1.000, 1170A1.046	07/91 ⇨ 07/99
CINQUECENTO 1.1 Sporting	176B2.000	10/94 ⇨ 01/98
COUPE 2.0 16V Turbo	175A1.000	11/93 ⇨ 08/96
DOBLO I 1.2	223A5.000	03/01 ⇨
PUNTO I 1.1	176B2.000	04/96 ⇨ 02/00
PUNTO I 1.2 16V	176B9.000	04/97 ⇨ 09/99
PUNTO I 55 1.1	176A6.000, 176B2.000	09/93 ⇨ 09/99
PUNTO I 60 1.2	176A7.000, 176B1.000, 176B4.000	09/93 ⇨ 06/00
PUNTO I 75 1.2	176A8.000	10/93 ⇨ 09/99
PUNTO I 85 16V 1.2	176B9.000	04/97 ⇨ 06/00
FIORINO II 1.2 MPI	178E8.011	01/04 ⇨
PALIO 1.0	178A1.000	04/96 ⇨ 10/03
PALIO 1.0 GLX	--	07/98 ⇨ 10/03
PALIO 1.1	187A1.000	06/06 ⇨
PALIO 1.2	176A8.000, 178B5.000, 178B7.045, 178C4.066, 178E2.000, 188A4.000	04/96 ⇨
PALIO 1.2 75	178B7.045	03/98 ⇨
PALIO 1.2 MPI	178C4.066	01/02 ⇨
PALIO 1.4	178B2.000, 178B2.016	04/96 ⇨ 10/02

FIAT		
PALIO 1.4 Cat	178B2.000, 178B2.016	04/96 ⇨ 08/01
PALIO 1.5	178E5.022	02/02 ⇨
PALIO 1.5 MPI	178E5.027	08/01 ⇨
PALIO 1.6 16V 100	178C8.098	01/98 ⇨
PANDA I 1.1	156C.046, 187A1.000	09/00 ⇨ 03/95
PANDA I 1.1 AWD	187A1.000	09/00 ⇨ 02/04
PANDA I 1000 4x4	141C2.000	05/86 ⇨ 12/94
PANDA I 1000 i.e	156A2.246	08/92 ⇨ 02/04
PANDA I 1000 i.e. Cat	141C2.000, 156A2.246	10/87 ⇨ 08/98
PANDA I 1100	156C.046, 176B2.000, 187A1.000	05/91 ⇨ 12/99
PANDA I 1100 4x4	176B2.000	02/95 ⇨ 07/04
PANDA I 1100 i.e. 4x4	187A1.000	12/00 ⇨
PANDA I 1100 Trekking 4x4	156C.046	10/91 ⇨ 07/04
PANDA I 900	1170A1.046	04/92 ⇨ 12/96
PANDA I 900 i.e.	1170A1.046	01/98 ⇨
PANDA II 1.1	--	09/03 ⇨
PANDA II 1.2	188A4.000	09/03 ⇨
PANDA II 1.2 4x4	188A4.000	09/04 ⇨
PANDA II 1.2 Bipower	188A4.000	09/04 ⇨ 12/11
PANDA II 1.2 Bi-Power / Natural Power	--	04/09 ⇨
PANDA II 1.2 Euro 4	--	04/09 ⇨
PANDA II 1.2 LPG	188A4.000	04/09 ⇨
PANDA II 1.2 Natural Power	188A4.000, 188A4000CNG	01/07 ⇨ 12/11
PUNTO II 1.2 60	188A4.000	09/99 ⇨ 12/10
PUNTO II 1.2 Bifuel	188A4.000	08/07 ⇨ 03/12
PUNTO II 1.2 Bipower	188A4.000	08/01 ⇨ 05/03
PUNTO II 1.2 Natural Power	188A4.000, 188A4000CNG	01/03 ⇨ 03/12
SEICENTO / 600 0.9	1170A1.046	11/97 ⇨ 01/10
SEICENTO / 600 1.1	176B2.000, 187A1.000	01/98 ⇨ 01/10
SIENA 1.2	178B7.045	01/98 ⇨
SIENA 1.3	178B5.000, 178C4.066, 188A4.000	09/01 ⇨ 12/12
SIENA 1.4	178B2.000, 178B2.016	04/96 ⇨ 12/09
SIENA 1.4 Cat	178B2.000, 178B2.016	04/96 ⇨ 12/09
SIENA 1.5	178E5.022, 178E5.027	09/02 ⇨
SIENA 1.7 [CHN]	--	01/06 ⇨
STRADA 1.2	178B5.000, 178B7.045, 188A4.000	04/03 ⇨
STRADA 1.2 Trekking	--, 178B7.045	11/05 ⇨
TEMPRA 1.8 i.e.	835C2.000, 835C4.000, 836A5.000	09/93 ⇨ 08/96
TIPO I 1.8 i.e	836A5.000	03/93 ⇨ 04/95
TIPO I 1.8 i.e.	835C2.000, 835C4.000, 836A5.000, 836A6.000	03/93 ⇨ 10/95
UNO 1.0	156A2.000	06/89 ⇨ 02/92
UNO 1.0 i.e.	146C7.000	09/89 ⇨ 03/94
UNO Mondo 1.2 i.e. [IND]	178D5.066	01/96 ⇨
FIAT (BR)		
PALIO 1.0i	1.0Mpi	01/96 ⇨
PALIO 1.5i	1.5Mpi	01/96 ⇨ 12/00
PALIO 1.6i	1.6Spi	01/99 ⇨ 12/99
SIENA 1.0i	1.0Mpi	01/99 ⇨ 12/00
SIENA 1.5i	1.5Mpi	01/99 ⇨ 12/00
SIENA 1.6i	1.6Mpi	01/98 ⇨ 12/00
STRADA 1.5i	1.5Mpi	01/99 ⇨ 12/01
STRADA 1.6i 8v	1.6Mpi	01/99 ⇨ 12/00
UNO 1.5i	1.5Spi	01/92 ⇨ 12/96
UNO 1.5i Furgoneta	1.5Mpi	01/92 ⇨
UNO CS 1.5i	1.5Spi	01/92 ⇨ 12/96
UNO MILLE 1.0	1.0	05/93 ⇨ 12/95
UNO MILLE 1.0i	1.0Mpi	01/96 ⇨
INNOCENTI		
MILLE 1.0	146C7.000	07/95 ⇨ 05/97
MILLE 1.0i	146C7.000	02/93 ⇨ 02/98
LANCIA		
DEDRA 1.8 i.e.	836A5.000	07/94 ⇨ 07/99
DELTA I 2.0 16V HF Evo Integrale	831E5.046	06/93 ⇨ 01/94
DELTA II 1.8 i.e.	835C2.000, 835C4.000, 836A5.000, 836A6.000, 836C4.000	06/93 ⇨ 08/99
DELTA II 2.0 16V Turbo	175A4.000, 836A2.000	06/93 ⇨ 08/99
THEMA 2000 16V Turbo	834C1.000	12/88 ⇨ 06/90
THEMA 2000 i.e. 16V	834B2.000, 834B2.246	05/88 ⇨ 08/92
THEMA 2000 i.e. 16V Turbo	834C1.000, 834C1.246	12/88 ⇨ 03/93
Y I 1.1	176B2.000	11/95 ⇨ 09/03
Y I 1.2	188A4.000, 840A3.000	03/96 ⇨ 09/03
Y I 1.2 16V	176B9.000	04/97 ⇨ 09/03
YPSILON II 1.2	169A4.000, 188A4.000	10/03 ⇨ 12/11

FACET 9.6048

07

COILS

Adatt./Suitable:

BOSCH
0 986 221 037

FIAT
7746151

INNOCENTI
7746151

LANCIA
7746151

MAGNETI MARELLI
060705404010
607 054 04
BAE 504 D

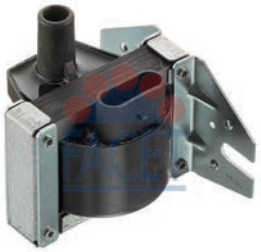

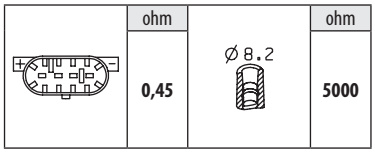

FIAT		
CROMA I 2000 CHT	154A1.000, 154C5.000	01/91 ⇨ 09/92
CROMA I 2000 i.e.	154C3.000, 154C3.046, 834B.146	10/87 ⇨ 12/96
ELBA 1.5	149C1.000	01/92 ⇨ 12/96
FIORINO II 1.6	146C6.000	01/94 ⇨ 05/01
FIORINO II 70 i.e. 1.4	146C5.000	05/94 ⇨ 05/01
FIORINO II 75 i.e. 1.6	146C6.000	10/93 ⇨ 05/01
TEMPRA 1.4 i.e.	160A1.046	04/90 ⇨ 08/96
TEMPRA 1.6	159A3.000, 159A3.048, 159A3.098	03/90 ⇨ 12/96
TEMPRA 1.6 i.e.	159A3.046, 159A3.048	06/90 ⇨ 08/96
TIPO I 1.4	160A1.048	07/87 ⇨ 12/89
TIPO I 1.4 i.e.	160A1.046	05/89 ⇨ 04/95
TIPO I 1.6	159A3.048, 160A2.000	01/88 ⇨ 10/95
TIPO I 1.6 i.e.	159A3.046, 159A3.048	07/90 ⇨ 04/95
TIPO I 1.6 SX DGT	159A3.000	05/89 ⇨ 10/95
UNO 1.4 Super	146C2.028	09/89 ⇨ 09/92
UNO 70 i.e. 1.4	146C1.000, 160A1.046	09/89 ⇨ 07/96
UNO 70 S 1.4	160A1.048	10/88 ⇨ 06/06
UNO 75 i.e. 1.5	149C1.000	10/85 ⇨ 12/93
UNO Mondo 1.4 Super	146C2.028	01/96 ⇨
INNOCENTI		
ELBA 1.4 i.e.	146C5.000	09/94 ⇨ 12/96
ELBA 1.5 i.e.	149C1.000	08/92 ⇨ 09/94
ELBA 1.6 i.e.	146C6.000	09/94 ⇨ 12/96
MILLE 1.4	160A1046	07/95 ⇨ 05/97
LANCIA		
DEDRA 1.6 i.e.	835A1.046	08/89 ⇨ 03/93
DELTA II 1.4 i.e.	160A1.046	10/94 ⇨ 08/99
THEMA 2000 i.e	834B1.000	09/88 ⇨ 05/92
THEMA 2000 i.e.	834B.146	09/87 ⇨ 05/92
THEMA 2000 i.e.Turbo	834C.146	07/86 ⇨ 05/90
THEMA 2000 Turbo	834C.146	12/88 ⇨ 03/92
Y10 1.3 i.e.	146A5.046, 156B.000	11/87 ⇨ 12/95

FACET 9.6055 — 05

COILS

Adatt./Suitable:

BOSCH
0 986 221 029
CITROËN
5970 45
96 035 284
DUCELLIER
2 526 026 A
HITACHI
138752
2508752
MAGNETI MARELLI
060705754010
060717009012
PEUGEOT
5970 45
96 035 284

[03] **Supplied until depletion**
- Fornibile fino ad esaurimento delle scorte
- Fourni jusqu'à épuisement du stock
- Lieferbar solange vorrat reicht
- Suministrado hasta el stock termina

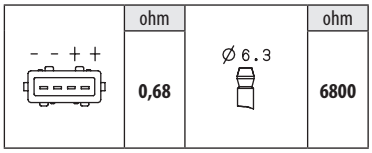

CITROËN		
AX 1.3 Sport	M4A	04/87 ⇨ 12/88
AX 10	C1A	09/86 ⇨ 06/92
AX 10 E	C3A	12/86 ⇨ 12/88
AX 11	H1A, H1B, HDZ(TU1M)	09/86 ⇨ 12/97
AX 11 4x4	H1A	06/91 ⇨ 07/92
AX 11 Cat	HAZ(TU1CP)	09/88 ⇨ 12/89
AX 14	K1A(TU3), K1B, K1F, K1G, K1J, K2A, K2B, K2D, KAY(TU3CP), KDX(TU3M/Z), KDY(TU3FM), KDY(TU3M), KDZ(TU3M/Z)	09/86 ⇨ 04/97
AX 14 4x4	KD4, KDX(TU3M/Z), KDY(TU3FM), KDY(TU3M), KDZ(TU3M/Z)	06/91 ⇨ 12/96
XM I 2.0 i	RDZ(XU10MZ), RFZ(XU10J2)	05/89 ⇨ 06/94
BERLINGO I 1.4	TU32	07/96 ⇨ 10/98
ZX 1.1	H1A, H1B, HDZ(TU1M), TU1	03/91 ⇨ 06/97
ZX 1.4 i	KDY(TU3M)	10/93 ⇨ 10/97
ZX 1.9	D6E(XU9JA)	03/91 ⇨ 06/97
ZX 1.9 i	DKZ(XU9JA), XU9JA	03/91 ⇨ 06/97
PEUGEOT		
106 I 1.0	TU9	09/91 ⇨ 04/96
106 I 1.1	H1B(TU1), HDZ(TU1M)	08/91 ⇨ 04/96
106 I 1.4	K5A(TU3), KDY(TU3M), TU3, TU3.2	08/91 ⇨ 04/96
106 II 1.1	H1B(TU1)	04/96 ⇨
205 II 1.0	TU9	10/87 ⇨ 09/98
205 II 1.1	H1B(TU1)	01/91 ⇨ 12/94
306 1.4	TU3	01/93 ⇨ 04/02
405 II 1.4	TU3F2	01/93 ⇨ 12/96
PARTNER I 1.4	TU32	06/96 ⇨ 12/15
RANCH 1.4	K5A(TU3.2)	09/96 ⇨ 08/02

FACET 9.6058 — 07

COILS

Adatt./Suitable:

BOSCH
0 986 221 028
FIAT
7553120
7646974
7746153
INNOCENTI
7746153
LANCIA
7646974
MAGNETI MARELLI
060705606010
607 056 06
BAE 506 F

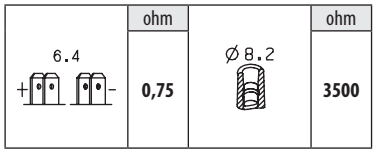

FIAT		
DUNA 60 1.1	146A6.000	01/87 ⇨ 12/91
DUNA 70 1.3	146A5.000	01/87 ⇨ 12/91
ELBA 1.3	146A5.000	04/91 ⇨ 02/95
FIORINO I 1.1 60	146A9.000	11/86 ⇨ 04/88
FIORINO I 1.3	146A5.000	12/87 ⇨ 08/93
FIORINO II 1.3	146A5.000	01/88 ⇨ 12/94
FIORINO II 60 1.1	146A9.000	05/88 ⇨ 12/93
FIORINO II 70 1.3	146A5.000	01/88 ⇨ 12/94
PANDA I 1000	156A2.100, 156A3.000	01/85 ⇨ 12/92
PANDA I 1000 4x4	156A2.100, 156A2.246, 156A3.000	01/86 ⇨ 12/94
PANDA I 750 Cat	156A4.048	01/95 ⇨ 10/03
PANDA I 750 Fire	156A4.048	11/88 ⇨ 04/91
UNO CS 1.1	146A6.000	09/87 ⇨ 09/91
FIAT (BR)		
UNO CS 1116	--	01/88 ⇨
INNOCENTI		
ELBA 1.3	146A5.000	08/91 ⇨ 12/96
LANCIA		
DELTA I 1.1	831B8.000	01/86 ⇨ 12/90
DELTA I 1.3	1831B.000, 3831B.000, 831A2.000, 831B.000	09/79 ⇨ 10/92

FACET 9.6059 — 05

COILS

Adatt./Suitable:

BOSCH
0 986 221 002
MAGNETI MARELLI
060717005012
SEAT
867 905 105 A
VW
867 905 105 A

[00] **Eliminated on 23-02-2022. Please verify the availability through our local distributors**
- Eliminato il 23-02-2022. Verificare la disponibilità presso i nostri distributori
- Eliminé le 23-02-2022. Verifier la disponibilité auprès de nos distributeurs sur place
- Am 23-02-2022 gestrichen. Evtl. Verfügbarkeit bitte bei unseren Händlern prüfen
- Eliminado en fecha 23-02-2022. Verificar la disponibilidad a través de nuestros distribuidores locales

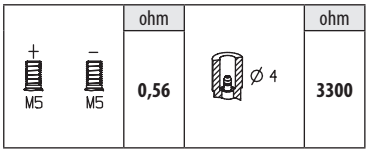

SEAT		
IBIZA II 1.8 i	ADZ	03/93 ⇨ 08/99
IBIZA II 2.0 i	2E	03/93 ⇨ 08/99
TOLEDO I 1.6 i	1F, ABN, EZ	05/91 ⇨ 03/99
TOLEDO I 1.8 i	ABS	11/93 ⇨ 12/96
TOLEDO I 2.0 i	2E	05/91 ⇨ 03/99
TOLEDO I 2.0 i 16V	ABF	11/93 ⇨ 03/99
VW		
PASSAT III 1.6	1F, EZ	04/88 ⇨ 07/92
PASSAT III 2.0	2E	02/90 ⇨ 05/97

FACET 9.6062S — 05

COILS

Adatt./Suitable:

BMW
1 317 232
1 703 359
1 703 360
1 726 177
1 727 108
1 730 520
1 730 766
1 734 468
12 13 1 317 232
12 13 1 317 585
12 13 1 402 440
12 13 1 402 713
12 13 1 404 102
12 13 1 703 359
12 13 1 726 177
12 13 1 726 178
12 13 1 727 108
12 13 1 729 842
12 13 1 730 765
12 13 1 730 766
12 13 1 731 884
12 13 1 734 468
12 13 1 748 394
12 13 1 748 395
12 13 7 599 218
12 13 9 066 468
7 599 218

BOSCH
1 227 030 082

[03] **Supplied until depletion**
- Fornibile fino ad esaurimento delle scorte
- Fourni jusqu'à épuisement du stock
- Lieferbar solange vorrat reicht
- Suministrado hasta el stock termina

[255] **without spark plug connector**
- senza cappuccio candela d'accensione
- sans cosse de bougie d'allumage
- ohne Zündkerzenstecker
- sin conector de bujía de encendido

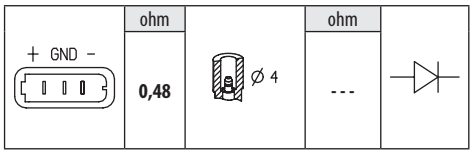

BMW		
3 III 318 is	M42B18(184S1)	01/92 ⇨ 12/95
3 III 320 i	M50B20(206S1), M50B20(206S2), M52B20(206S3)	01/91 ⇨ 11/99
3 III 325 i	M50B25(256S1), M50B25(256S2)	09/90 ⇨ 12/95
3 III M3 3.0	S50B30(306S1)	11/92 ⇨ 07/95
3 II 318 is	M42B18(184S1)	09/89 ⇨ 08/91
5 III 520 i	M50B20(206S1), M50B20(206S2)	07/91 ⇨ 07/96
5 III 520 i 24V	M50B20(206S1), M50B20(206S2)	04/90 ⇨ 08/95
5 III 525 i	M50B25(256S1), M50B25(256S2)	07/91 ⇨ 07/96
5 III 525 i 24V	M50B25(256S2)	03/90 ⇨ 08/95
5 III 525 ix	M50B25(256S1)	01/92 ⇨ 03/96
5 III 525 iX 24V	M50B25(256S1), M50B25(256S2)	10/91 ⇨ 08/95
5 III 530 i	M60B30(308S1)	09/92 ⇨ 07/96
5 III 530 i V8	M60B30(308S1)	09/92 ⇨ 12/95
5 III 540 i	M60B40(408S1)	09/93 ⇨ 07/96
5 III 540 i V8	M60B40(408S1)	09/92 ⇨ 12/95
5 III M5	S38B38(386S1)	01/92 ⇨ 07/95
7 II 730 i, iL V8	M60B30(308S1)	04/92 ⇨ 09/94
7 II 740 i, iL V8	M60B40(408S1)	05/92 ⇨ 03/94
7 III 730 i, iL	M60B30(308S1)	03/94 ⇨ 02/96
7 III 740 i, iL	M60B40(408S1)	03/94 ⇨ 02/96
8 840 i	M60B40(408S1)	03/93 ⇨ 02/96

FACET 9.6068 — 07

COILS

Adatt./Suitable:

ALFA ROMEO
60558152
60586072
60809606

BOSCH
0 221 503 407
0 221 503 457

CITROËN
5970 53

FIAT
60558152
60586072
60809606
7648797

HITACHI
138793
2508793

HONDA
30520-PDF-E01

IVECO
76487970

KIA
0K011-18100

LANCIA
7648797

LAND ROVER
ERR6045
ERR6566 *1

MAGNETI MARELLI
060717037012

PEUGEOT
5970 53

ROVER
ERR6045

VW
048 905 105 1

[*1] **Without fastening clamp**
- Senza staffa di fissaggio
- sans bride de fixation
- ohne Befestigungsbügel
- sin estribo de sujeción

[245] **without fastening clamp**
- senza staffa fissaggio
- sans bride de fixation
- ohne Befestigungsbügel
- sin estribo de sujeción

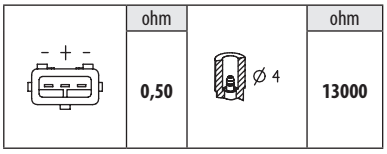

ALFA ROMEO		
33 II 1.5 i.e.	AR30738	09/91 ⇨ 12/95
33 II 1.7 i.e.	AR30740	09/91 ⇨ 12/95
145 1.6 i.e.	AR33201	10/94 ⇨ 12/96
145 1.7 i.e. 16V	AR33401	10/94 ⇨ 12/96
146 1.7 i.e. 16V	AR33401	12/94 ⇨ 12/96
155 1.7 T.S.	AR67103, AR67105	04/93 ⇨ 04/96
155 1.8 T.S.	AR67101	02/92 ⇨ 05/94
155 1.8 T.S. Sport	AR67101, AR67102	03/92 ⇨ 12/96
155 2.0 T.S.	AR67201, AR67202	02/92 ⇨ 05/95
164 2.0 T.S.	AR64103	09/92 ⇨ 09/98
CITROËN		
JUMPY I 1.6	1580SPI, 220A2.000	10/95 ⇨ 08/00
JUMPY I 1.6 i	1580SPI, 220A2.000	10/95 ⇨ 08/00
FIAT		
BRAVA 1.2 16V	182B2.000	12/98 ⇨ 12/02
BRAVA 1.2 16V 80	182B2.000, 188A5.000	10/00 ⇨ 12/02
BRAVA 1.4	182A5.000	10/95 ⇨ 10/01
BRAVA 1.4 12 V	182A3.000	10/95 ⇨ 08/98
BRAVO I 1.2 16V 80	182B2.000, 188A5.000	10/00 ⇨ 10/01
BRAVO I 1.4	182A3.000, 182A5.000	10/95 ⇨ 10/01
CROMA I 2000 16V	154E1.000	08/92 ⇨ 08/96
CROMA I 2000 i.e. 16V	154E1.027	03/95 ⇨ 12/96
FIORINO II 1.4	146C5.000	11/92 ⇨ 05/01
FIORINO II 1.6	146D6.000	01/94 ⇨ 05/01
FIORINO II 70 i.e. 1.4	146D5.000	05/94 ⇨ 05/01
FIORINO II 75 i.e. 1.6	146D6.000	10/93 ⇨ 05/01
MAREA 1.2 16V	182B2.000	10/98 ⇨ 05/02
MAREA 1.4 80 12V	182A3.000	09/96 ⇨ 05/02
PALIO 1.2	178D6.011, 188A5.000	03/00 ⇨ 10/04
PUNTO I 1.4 GT Turbo	176A4.000, 176B6.000	10/93 ⇨ 07/99
SCUDO I 1.6	220A2.000	02/96 ⇨ 12/06

FIAT		
PUNTO II 1.2 16V	188A5.000	06/03 ⇨
PUNTO II 1.2 16V 80	188A5.000	09/99 ⇨ 04/06
SIENA 1.3	188A5.000	09/01 ⇨ 12/09
TEMPRA 1.4 i.e.	836A4.000	04/90 ⇨ 08/96
TEMPRA 1.6 i.e.	835C1.000	10/90 ⇨ 08/96
TIPO I 1.1 i.e.	156C.046	10/94 ⇨ 10/95
TIPO I 1.4 i.e.	836A4.000	05/89 ⇨ 04/95
TIPO I 1.6	835C1.000	03/93 ⇨ 10/95
TIPO I 1.6 i.e.	835C1.000	10/92 ⇨ 04/95
TIPO I 1.6 i.e. [BRA]	160E2.011	03/93 ⇨ 04/95
UNO Mondo 1.0 i.e.	146D8.000	01/96 ⇨
FIAT (BR)		
TIPO 1.6i	1.6Mpi	01/93 ⇨ 12/97
UNO 1.6i	1.6Mpi	01/95 ⇨ 12/96
HONDA		
ACCORD 1.6	D16B7	10/98 ⇨ 12/01
ACCORD VI 1.6	D16B6	12/99 ⇨ 12/02
ACCORD VI 1.6 i	D16B6	10/98 ⇨ 12/02
ACCORD VI 1.6 LS	D16B7	10/98 ⇨ 12/02
KIA		
SPORTAGE I 2.0 4WD	FE(8V)	06/95 ⇨ 11/98
SPORTAGE I 2.0 i 4WD	FE(8V)	04/94 ⇨ 08/99
LANCIA		
DEDRA 1.6 i.e.	835C1.000	04/93 ⇨ 07/99
DELTA II 1.4 i.e.	836A4.000	10/94 ⇨ 08/99
DELTA II 1.6 i.e.	835C1.000	06/93 ⇨ 08/99
KAPPA 2.0 16V Turbo	834A4.000, 838A4.000	02/95 ⇨ 10/01
THEMA 2000 16V	834F1.000	05/92 ⇨ 07/94
THEMA 2000 16V Turbo	834F2.000	10/92 ⇨ 07/94
THEMA 2000 Turbo 16V	834F2.000	11/92 ⇨ 07/94
Y I 1.2 16V	176B9.000, 188A5.000	10/00 ⇨ 09/03
Y I 1.4 12V	840A2.000, 840A4.000	03/96 ⇨ 09/03
Y10 1.1 Fire	176B2.000	01/95 ⇨ 12/95
Y10 1.1 Fire Trazione integrale	176B2.000	01/95 ⇨ 12/95
Y10 1.1 i.e. Fire Trazione integrale	156C.046	09/92 ⇨ 12/95
LAND ROVER		
DISCOVERY II 4.0 V8 4x4	35D, 56D, 94D	11/98 ⇨ 06/04
DISCOVERY II 4.6 V8 [USA]	--	01/03 ⇨ 06/04
RANGE ROVER II 3.9 4x4	42D	07/94 ⇨ 03/02
RANGE ROVER II 4.0 4x4	42D, 46698710	01/95 ⇨ 03/02
RANGE ROVER II 4.6 4x4	46D, 48D, 60D	07/94 ⇨ 03/02
PEUGEOT		
EXPERT I 1.6	222A2(1580SPI)	02/96 ⇨ 09/00
VOLKSWAGEN (BR)		
GOL 2.0i 16V	112	10/95 ⇨
PARATI 2.0i 16V	112	02/96 ⇨

FACET 9.6069 — 07

COILS

Adatt./Suitable:

BOSCH
0 221 122 008
0 221 122 031
0 221 122 450

FORD
1 027 283
6 077 429
79BB-12024-AA
92GB-12024-AA

HITACHI
138803

MERCURY
E73Z12029A

Motorcraft
EDG 27

VW
046 905 105

[960] **Dry (epoxy) coil replacing original oil-bath coil version**
- Bobina (resinizzata) sostituente originale a bagno d'olio
- Bobine seche, remplaçant la bobine d'origine à bain d'huile
- Trockenspule, die die Originale im Ölbad ersetzt
- Bobina seca, sustituye modelo original con baño de aceite

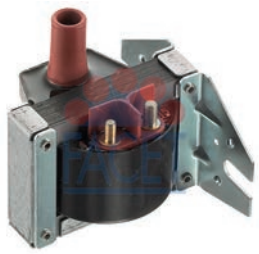

− M5	+ M6	ohm	Ø 8.2	ohm
		0,75		7200

FORD		
ESCORT III 1.3	JPA	09/80 ⇨ 02/86
ESCORT III 1.4 i	F6B, F6D, FUC	02/86 ⇨ 07/90
ESCORT III 1.6	LP1, LPA	09/80 ⇨ 12/85
ESCORT III 1.6 i	LR1	09/83 ⇨ 12/85
ESCORT III 1.6 XR3i	LR1, LRA	10/82 ⇨ 12/85
ESCORT IV 1.4	F6B, F6D, FUA, FUC	01/86 ⇨ 07/90
ESCORT IV 1.6 Turbo RS	LNB	01/86 ⇨ 07/90
ESCORT IV 1.6 XR3i	LR2, LRB	01/86 ⇨ 07/90
ESCORT V RS Cosworth 4x4	N5F	10/91 ⇨ 01/95
FIESTA II 1.4	FUB, FUD	10/85 ⇨ 11/89
FIESTA II 1.6 XR2	LUB, LUD	03/84 ⇨ 02/89
FIESTA III 1.4	F6E	03/89 ⇨ 12/95
GRANADA 1.7	TV17LC	08/77 ⇨ 05/82
GRANADA 2.0	NEP	08/79 ⇨ 08/85
SIERRA I 1.3	JCT	08/82 ⇨ 12/86
SIERRA I 1.8	REB	10/84 ⇨ 12/86
SIERRA I 2.0	NET	08/82 ⇨ 12/86
SIERRA I 2.0 i	NR2	03/85 ⇨ 12/86
ORION I 1.3	JPA	07/83 ⇨ 03/86
ORION I 1.4	FUA, FUC	12/85 ⇨ 07/90
ORION I 1.4 Cat	F6B, F6D	02/87 ⇨ 07/90
ORION I 1.6	LP1, LPA	07/83 ⇨ 03/86
ORION I 1.6 i	LR1, LRA, LRB	07/83 ⇨ 07/90
SCORPIO I 1.8	REC	04/85 ⇨ 02/92
SCORPIO I 2.0	TL20H-NE4, TL20H-NER	10/84 ⇨ 02/90
SCORPIO I 2.0 i	N9B, N9D, N9F, NRA, NRI	04/85 ⇨ 09/94
SCORPIO I 2.4 i	ARC	09/86 ⇨ 09/88
SCORPIO I 2.9 i	BRC, BRD, BRE, BRF	09/86 ⇨ 12/94
SCORPIO I 2.9 i 4x4	BRC, BRD, BRE, BRF	09/86 ⇨ 10/94
SCORPIO I 2.9 i Cat	BRE	10/87 ⇨ 09/94
SCORPIO II 2.9 i	BRG	02/95 ⇨ 08/98
SIERRA II 1.8	R2C, R6A	05/88 ⇨ 02/93
SIERRA II 2.0	N8C, NES	01/87 ⇨ 02/93
SIERRA II 2.0 i	N4A, N4I, N9B	01/87 ⇨ 02/93
TRANSIT II 1.6	LAC, LAT	09/85 ⇨ 09/92
TRANSIT II 2.0	N6TS, NAT, NAV, NAW, NBA, NCA, NSF, NSG, NSH	09/85 ⇨ 03/00
TRANSIT II 2.0 Cat	N6T	11/85 ⇨ 09/92
TRANSIT II 2.0 EFI	--	08/91 ⇨ 08/94
TRANSIT II 2.0 i	NCA	09/91 ⇨ 07/94
TRANSIT II 2.0 L	NAW, NAX	10/85 ⇨ 03/91
TRANSIT II 2.9 i	BRT	01/91 ⇨ 09/94
TRANSIT 2.0	NSHCNG	06/94 ⇨ 03/00
TRANSIT TOURNEO 2.0	NSF, NSG, NSH	11/94 ⇨ 12/00

FACET 9.6070 — 07,5

COILS

Adatt./Suitable:

DENSO
029700-6760
029700-7180
029700-7910

FORD
5 008 196
6 489 415
6 630 365
6 958 305
919F-12029-AA
E9SF-12029-AA
E9SZ-12029-A
F1SU-12029-AA
F5SU-12029-AA
F5SU-12029-AB

FORD AUSTRALIA
6 958 305
F5SU-12029-AA
F5SZ-12029-A

FORD USA
5 008 196
6 958 305
F5SU-12029-AA
F5SU-12029-AB

JAGUAR
LNA 1508AA

MAGNETI MARELLI
060717048012

Motorcraft
DG 440
DGE-456

[03] **Supplied until depletion**
- Fornibile fino ad esaurimento delle scorte
- Fourni jusqu'à épuisement du stock
- Lieferbar solange vorrat reicht
- Suministrado hasta el stock termina

− − − +	ohm	Ø 7	ohm
	0,50		13000

FORD		
COUGAR 2.5 ST 200	SGA	01/00 ⇨ 12/01
COUGAR 2.5 ST 200 24V	MABB	08/98 ⇨
COUGAR 2.5 V6 24V	JP25LCBD, LCBA, LCBB, LCBC, LCBE	06/00 ⇨ 12/01
MONDEO I 2.5 24V	SEA, SEB, SEC	08/96 ⇨ 09/00
MONDEO I 2.5 i 24V	SEA	07/94 ⇨ 08/96
MONDEO I 2.5 ST 200	SGA	05/99 ⇨ 09/00
SCORPIO I 2.9 24V	BOA	08/93 ⇨ 09/94
SCORPIO I 2.9 i 24V	BOA	04/91 ⇨ 09/94
SCORPIO II 2.9 i 24V	BOB	10/94 ⇨ 08/98
WINDSTAR 3.0 i 12V	99U	04/95 ⇨ 07/97
WINDSTAR 3.0 i 12V S	99U	08/97 ⇨
FORD AUSTRALIA		
TAURUS 3.0i V6	--	01/96 ⇨
FORD USA		
WINDSTAR 3.0 V6	--, 99U30	01/95 ⇨ 02/99
JAGUAR		
XJ 12 6.0	8E	09/94 ⇨ 09/97

FACET 9.6078 — 07

COILS

Adatt./Suitable:

BOSCH
0 221 118 329
0 221 502 431

HITACHI
138716
2508716

MERCEDES-BENZ
A 000 158 45 03
A 000 158 48 03
A 000 158 50 03
A 000 158 53 03
A 000 158 54 03
A 000 158 61 03
A 000 158 62 03

+ M6	− M5	ohm	Ø 8.2	ohm
		0,38		10500

MERCEDES-BENZ		
CLASSE E I E 300 4-matic	M103.985	06/93 ⇨ 06/95
CLASSE E I E 300 T 4-matic	M103.985	06/93 ⇨ 06/96
CLASSE E I E 420	M119.975	06/93 ⇨ 06/95
CLASSE E I E 500	M119.974	06/93 ⇨ 06/95
CLASSE E I E 60 AMG	M119.974(AMG6.0)	05/94 ⇨ 06/95
124 200 CE	M102.963	09/89 ⇨ 06/93
124 230 CE	M102.982	03/87 ⇨ 12/92
124 230 CE Cat	M102.982	06/89 ⇨ 12/92
124 300 CE	M103.983	03/87 ⇨ 05/93
190 2.0	M102.924	08/83 ⇨ 05/90
190 2.3	M102.985	09/87 ⇨ 09/88
190 2.3 E	M102.985	10/82 ⇨ 09/88
190 2.6	M103.942	10/82 ⇨ 09/88
190 E 1.8	M102.910, M102.919	04/90 ⇨ 12/93
190 E 2.0	M102.962	10/82 ⇨ 08/93
190 E 2.3	M102.985	09/86 ⇨ 08/93
190 E 2.3-16	M102.983	04/84 ⇨ 08/88
190 E 2.5-16	M102.990	09/88 ⇨ 08/93
190 E 2.5-16 Evolution	M102.991	03/89 ⇨ 08/93
190 E 2.5-16 Evolution II	M102.992	05/90 ⇨ 08/93
190 E 2.6	M103.942	09/86 ⇨ 08/93
190 E 3.2 AMG	M103.983	01/88 ⇨
CLASSE G II 200 GE	M102.965	01/90 ⇨ 07/93
CLASSE G II 230 GE	M102.979, M102.989, M102.996, M102.997	09/89 ⇨ 07/96
CLASSE G II 300 GE	M103.987	09/89 ⇨ 09/97
CLASSE S II 260 SE	M103.941	09/85 ⇨ 06/91
CLASSE S II 300 SE, SEL	M103.981	09/85 ⇨ 06/91
CLASSE S II 380 SE, SEL	M116.963	10/81 ⇨ 08/85
CLASSE S II 380 SEC	M116.963	10/81 ⇨ 07/85
CLASSE S II 500 SE, SEL	M117.961, M117.963	12/79 ⇨ 08/85
CLASSE S II 500 SEC	M117.963	08/80 ⇨ 08/85
CLASSE S III 400 SE, SEL/S420	M119.971	02/91 ⇨ 10/98
CLASSE S III 500 SE, SEL	M119.970	02/91 ⇨ 10/98
CLASSE S III 500 SEC / CL 500	M119.970	10/92 ⇨ 12/99
CLASSE S III S 420	M119.971	01/93 ⇨ 10/98
CLASSE S III S 500	M119.970	01/93 ⇨ 10/98
CLASSE S III SEC/CL 420	M119.971	10/94 ⇨ 02/99
CLASSE SL III 300 SL	M103.982	09/85 ⇨ 08/89
CLASSE SL IV 300 SL	M103.984	03/89 ⇨ 08/93
CLASSE SL IV 500 SL	M119.960	09/89 ⇨ 08/92
KOMBI II 200 T	M102.922	09/85 ⇨ 05/90
KOMBI II 200 TE	M102.962, M102.963	09/88 ⇨ 08/92
KOMBI II 230 E Chassis	M102.982	09/86 ⇨ 06/93
KOMBI II 230 TE	M102.982	09/85 ⇨ 08/92
KOMBI II 230 TE Cat	M102.982	06/89 ⇨ 08/92
KOMBI II 260 TE FGST.	M103.940	09/89 ⇨ 08/92
KOMBI II 300 TE	M103.983	01/86 ⇨ 08/92

MERCEDES-BENZ		
KOMBI II 300 TE 4-matic	M103.985	09/86 ⇨ 06/93
TRE VOLUMI II 200	M102.922	12/85 ⇨ 10/92
TRE VOLUMI II 200 E	M102.963	09/88 ⇨ 08/93
TRE VOLUMI II 230 E	M102.982	12/84 ⇨ 06/93
TRE VOLUMI II 230 E Cat	M102.982	06/89 ⇨ 06/93
TRE VOLUMI II 260 E	M103.940	09/85 ⇨ 08/92
TRE VOLUMI II 260 E 4-matic	M103.943	09/86 ⇨ 08/92
TRE VOLUMI II 300 E	M103.983	06/85 ⇨ 08/92
TRE VOLUMI II 300 E 4-matic	M103.943, M103.983, M103.985	01/86 ⇨ 12/93
TRE VOLUMI II 400 E 4.2	M119.975	10/92 ⇨ 06/93
TRE VOLUMI II 500 E	M119.974	01/91 ⇨ 06/93
TRE VOLUMI II 500 E AMG 6.0	M119.974(AMG6.0)	01/92 ⇨ 06/93
PUCH		
G-MODELL 230 GE	M102.989	07/89 ⇨ 07/00
G-MODELL 300 GE	M103.987	06/89 ⇨ 08/93

FACET 9.6079

07

COILS

Adatt./Suitable:

BOSCH
0 221 502 433

HITACHI
138744
2508744

MERCEDES-BENZ
A 000 158 56 03
A 000 158 58 03
A 000 158 64 03

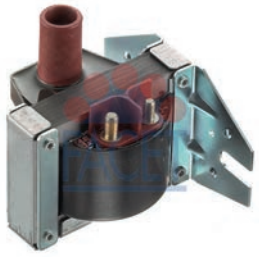

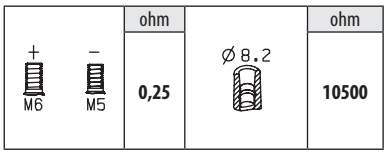

MERCEDES-BENZ		
124 300 CE-24	M104.980	09/89 ⇨ 06/93
CLASSE E I E 420	M119.975	06/93 ⇨ 06/95
CLASSE E I E 500	M119.974	06/93 ⇨ 06/95
CLASSE E I E 60 AMG	M119.974(AMG6.0)	05/94 ⇨ 06/95
CLASSE G II 500 GE	M117.965	09/93 ⇨ 12/94
CLASSE S II 420 SE, SEL	M116.965	10/85 ⇨ 06/91
CLASSE S II 420 SEC	M116.965	10/85 ⇨ 06/91
CLASSE S II 500 SE, SEL	M117.965	09/85 ⇨ 06/91
CLASSE S II 500 SE, SEL Cat	M117.965	06/89 ⇨ 06/91
CLASSE S II 500 SEC	M117.965	09/85 ⇨ 06/91
CLASSE S II 500 SEC Cat	M117.965	06/89 ⇨ 06/91
CLASSE S II 560 SE, SEL	M117.968	10/85 ⇨ 06/91
CLASSE S II 560 SEC	M117.968	10/85 ⇨ 06/91
CLASSE S III 600 SE, SEL	M120.980	04/91 ⇨ 12/92
CLASSE S III S 600	M120.980	01/93 ⇨ 10/98
CLASSE S III SEC/CL 600	M120.980	09/92 ⇨ 02/99
CLASSE SL IV 500	M119.972	09/92 ⇨ 10/01
CLASSE SL IV 600	M120.981	07/92 ⇨ 10/01
CLASSE SL IV 600 SL	M120.981	02/92 ⇨ 08/94
KOMBI II 300 TE-24	M104.980	09/89 ⇨ 08/92
TRE VOLUMI II 300 E-24	M104.980	09/88 ⇨ 08/92
TRE VOLUMI II 400 E 4.2	M119.975	10/92 ⇨ 06/93
TRE VOLUMI II 500 E	M119.974	01/91 ⇨ 06/93
TRE VOLUMI II 500 E AMG 6.0	M119.974(AMG6.0)	01/92 ⇨ 06/93

FACET 9.6080

07

COILS

Adatt./Suitable:

BOSCH
0 221 118 307

MERCEDES-BENZ
A 000 158 40 03

ROLLS-ROYCE
UD70828

960 **Dry (epoxy) coil replacing original oil-bath coil version**

- Bobina (resinizzata) sostituente originale a bagno d'olio
- Bobine seche, remplaçant la bobine d'origine à bain d'huile
- Trockenspule, die die Originale im Ölbad ersetzt
- Bobina seca, sustituye modelo original con baño de aceite

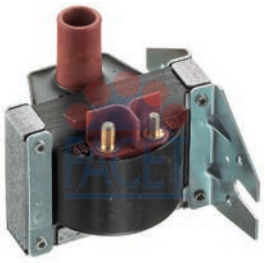

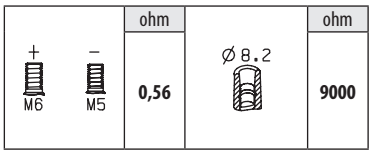

MERCEDES-BENZ		
124 200 CE	M102.963	09/89 ⇨ 06/93
124 230 CE	M102.982	03/87 ⇨ 12/92
124 230 CE Cat	M102.982	06/89 ⇨ 12/92
190 2.0	M102.921, M102.924	10/82 ⇨ 05/90
190 2.3	M102.985	09/87 ⇨ 09/88
190 2.3 E	M102.985	10/82 ⇨ 09/88
190 E 2.0	M102.962	10/82 ⇨ 08/93
190 E 2.3	M102.985	09/86 ⇨ 08/93
CLASSE G I 200 GE	M102.964	02/80 ⇨ 08/92
CLASSE G I 230 GE	M102.981, M102.987, M102.998	04/82 ⇨ 08/92
CLASSE G I 280 GE	M110.994	11/79 ⇨ 08/89
KOMBI I 200 T	M102.920, M102.939	11/80 ⇨ 11/85
KOMBI II 200 T	M102.922	09/85 ⇨ 05/90
KOMBI II 200 TE	M102.962, M102.963	09/88 ⇨ 08/92
KOMBI II 230 E Chassis	M102.982	09/86 ⇨ 06/93
KOMBI II 230 TE	M102.982	09/85 ⇨ 08/92
KOMBI II 230 TE Cat	M102.982	06/89 ⇨ 08/92
O 309	M102.943	01/68 ⇨ 02/89
T1 210 2.3	M102.942, M102.945	04/77 ⇨ 02/96
T1 310 2.3	M102.942, M102.945	08/82 ⇨ 02/96
T1 410 2.3	M102.942, M102.945	08/82 ⇨ 06/95
T2/LN1 510	M102.946	04/86 ⇨ 12/94
TRE VOLUMI I 280 E	M110.984, M110.988	02/76 ⇨ 11/85
TRE VOLUMI II 200	M102.922	12/85 ⇨ 10/92
TRE VOLUMI II 200 E	M102.963	09/88 ⇨ 08/93
TRE VOLUMI II 230 E	M102.982	12/84 ⇨ 06/93
TRE VOLUMI II 230 E Cat	M102.982	06/89 ⇨ 06/93
PUCH		
G-MODELL 230 GE	M102.981, M102.987	03/79 ⇨ 12/91
G-MODELL 280 GE	M110.994	01/86 ⇨ 12/91

FACET 9.6088

07

COILS

Adatt./Suitable:

BOSCH
0 221 503 004
0 221 503 025
F 01R 00A 025

CITROËN
5970 48
5970 60
5970 70
96 074 054
96 228 897

DUCELLIER
2 526 037 A
2 526 040 A

FIAT
9607405480
9622889780

HITACHI
138760
2508760

INNOCENTI
9622889780

LANCIA
9607405480
9622889780

MAGNETI MARELLI
060717043012

PEUGEOT
5970 48
5970 70
96 228 897

SAGEM
2 526 040 A

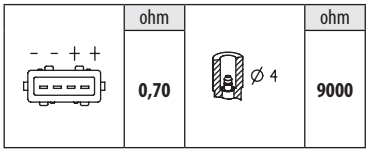

CITROËN		
XANTIA I 1.6 i	BFZ(XU5JP)	03/93 ⇨ 03/01
XANTIA I 1.8 i	LFX(XU7JB), LFZ(XU7JP)	03/93 ⇨ 01/98
XANTIA I 2.0	RFXXU10J2C/ZL3	03/93 ⇨ 05/95
XANTIA I 2.0 i	RFX(XU10J2C)	03/93 ⇨ 04/03
XANTIA I 2.0 Turbo	RGX(XU10J2TE)	06/95 ⇨ 04/03
BX 1.9	159C, D6U, DKK	09/85 ⇨ 12/94
BX 1.9 GTi	D6D, D6K	01/87 ⇨ 01/92
BX 16	BDY(XU5M), BDZ(XU5M)	05/89 ⇨ 12/94
BX 16 E	BDY(XU5M), BDZ(XU5M)	05/89 ⇨ 02/93
BX 19	D6A(XU9J2), DKZ(XU9JA)	07/86 ⇨ 12/94
BX 19 Cat	DFZ(XU9J1)	07/86 ⇨ 12/94
BX 19 GTi	D6A(XU9J2), DKZ(XU9JA)	07/86 ⇨ 02/93
BX 19 GTi 4x4	DKZ(XU9JA)	06/88 ⇨ 02/93
XSARA 1.4 i	KFW(TU3JP), KFX(TU3JP)	04/97 ⇨ 08/05
XSARA 1.4 LPG	KFW(TU3JP)	05/98 ⇨ 08/00
XSARA 1.6 i	NFZ(TU5JP)	04/97 ⇨ 09/00
XSARA 1.8 i	LFX(XU7JB), LFZ(XU7JP)	04/97 ⇨ 09/00
XSARA 1.8 i Aut.	LFZ(XU7JP)	04/97 ⇨ 09/00
EVASION 1.8	LFZ(XU7JP)	02/96 ⇨ 12/96
EVASION 2.0	RFU(XU10J2/C)	06/94 ⇨ 07/02
EVASION 2.0 Turbo C.T.	RGX(XU10J2TE)	06/94 ⇨ 07/02
JUMPER I 2.0	RFW(XU10J2U)	02/94 ⇨ 04/02
JUMPER I 2.0 4x4	RFW(XU10J2U)	08/96 ⇨ 04/02
XM I 2.0 i	RDZ(XU10MZ), RFZ(XU10J2)	05/89 ⇨ 06/94
XM I 2.0 i Turbo	RGY(XU10J2TE/Z)	09/92 ⇨ 06/94
XM I 2.0 Turbo	RGY(XU10J2TE/Z)	09/92 ⇨ 04/94
JUMPER II 2.0	XU10J2	04/02 ⇨
JUMPER II 2.0 bivalent	XU10J2	02/03 ⇨
BERLINGO I 1.1 i	HDZ(TU1M)	07/96 ⇨ 05/08
BERLINGO I 1.4 BiFuel	KFW(TU3JP)	07/96 ⇨ 10/02
BERLINGO I 1.4 i	KFW(TU3JP), KFX(TU3JP)	07/96 ⇨ 12/11
BERLINGO I 1.4 i bivalent	KFW(TU3JP)	04/03 ⇨ 10/05
BERLINGO I 1.8 i	LFX(XU7JB)	05/97 ⇨ 10/02
BERLINGO I 1.8 i 4WD	LFX(XU7JB)	04/97 ⇨ 10/01
SAXO 1.0	CDZ(TU9M)	10/97 ⇨ 06/03

CITROËN		
SAXO 1.0 X	CDY(TU9M), CDZ(TU9M)	05/96 ⇨ 11/98
SAXO 1.1 BiFuel	HDZ(TU1M)	07/00 ⇨ 06/03
SAXO 1.1 X, SX	HDZ(TU1M)	05/96 ⇨ 09/03
SAXO 1.4 VTS	KFW(TU3JP), KFX(TU3JP)	05/96 ⇨ 06/03
SAXO 1.6	NFT(TU5JP), NFZ(TU5JP)	02/01 ⇨ 04/04
SAXO 1.6 VTL, VTR	NFZ(TU5JP)	05/96 ⇨ 06/03
SAXO 1.6 VTS	NFT(TU5JP)	09/00 ⇨ 09/03
XANTIA II 1.6 i SX	BFZ(XU5JP)	01/98 ⇨ 03/01
XANTIA II 1.8 i	LFX(XU7JB)	01/98 ⇨ 04/03
XANTIA II 2.0 i	RFX(XU10J2C)	01/98 ⇨ 04/03
XANTIA II 2.0 Turbo	RGX(XU10J2TE)	01/98 ⇨ 04/03
XM II 2.0	XU10J2	08/94 ⇨ 07/99
XM II 2.0 Turbo	RGX(XU10J2TE), RGY(XU10J2TE/Z)	05/94 ⇨ 10/00
ZX 1.4 i	KFX(TU3JP)	03/91 ⇨ 10/97
ZX 1.6	BDY(XU5M), BFZ(XU5JP)	07/94 ⇨ 10/97
ZX 1.6 i	BDY(XU5M), BFZ(XU5JP)	03/91 ⇨ 10/97
ZX 1.8	LFZ(XU7JP)	03/91 ⇨ 10/97
ZX 1.8 i	LFZ(XU7JP)	07/92 ⇨ 10/97
ZX 1.9	D6E(XU9JA)	03/91 ⇨ 06/97
ZX 1.9 i	DKZ(XU9JA), XU9JA	03/91 ⇨ 06/97
ZX 2.0	RFX(XU10J2C)	07/94 ⇨ 10/97
ZX 2.0 i	RFX(XU10J2C), XU10J2	07/92 ⇨ 10/97
FIAT		
DUCATO II 2.0	RFL	03/94 ⇨
DUCATO II 2.0 4x4	RFL	11/94 ⇨ 07/06
DUCATO II 2.0 Bipower	RFL	11/02 ⇨
DUCATO II 2.0 LPG	RFL	11/02 ⇨ 07/06
DUCATO II 2.0 Panorama/ Combinato	RFW	03/94 ⇨ 04/02
ELBA 1.4	146D5.000	10/93 ⇨ 02/95
ULYSSE I 1.8	LFW(XU7JP)	05/97 ⇨ 08/02
ULYSSE I 2.0	RFU(XU10J2C)	06/94 ⇨ 08/02
ULYSSE I 2.0 Turbo	RGX(XU10J2CTE)	06/94 ⇨ 08/02
INNOCENTI		
ELBA 1.4 i.e.	146D5.000	09/94 ⇨ 12/96
ELBA 1.6 i.e.	146D6.000	09/94 ⇨ 12/96
LANCIA		
ZETA 2.0 Turbo	RGX(XU10J2TE)	05/95 ⇨ 09/02
PEUGEOT		
106 I 1.0	CDY(TU9M), TU9	04/96 ⇨ 03/01
106 II 1.0 i	CDY(TU9M), CDZ(TU9M)	04/96 ⇨ 10/99
106 II 1.1 BiFuel	HDZ(TU1M+)	04/96 ⇨ 03/01
106 II 1.1 i	HDY(TU1M+), HDZ(TU1M)	05/96 ⇨ 07/04
106 II 1.4 i	KFW(TU3JP), KFX(TU3JP)	05/96 ⇨ 07/04
106 II 1.6 i	NFZ(TU5JP)	05/96 ⇨ 10/99
205 II 1.6 i	BDZ(XU5M)	01/91 ⇨ 12/94
306 1.4	KFW(TU3JP), KFX(TU3JP)	04/93 ⇨ 04/02
306 1.4 SL	KFW(TU3JP), KFX(TU3JP)	06/94 ⇨ 05/01
306 1.6	NFZ(TU5JP)	05/93 ⇨ 10/00
306 1.6 SR	NFZ(TU5JP)	06/94 ⇨ 10/00
306 1.8	--, LFZ(XU7JP)	05/93 ⇨ 04/02
306 1.8 ST	LFZ(XU7JP)	06/94 ⇨ 05/01
306 2.0	RFX(XU10J2)	03/94 ⇨ 04/02
306 2.0 ST	RFX(XU10J2)	07/94 ⇨ 05/01
306 2.0 XSi	RFX(XU10J2)	05/93 ⇨ 05/01
BOXER I 2.0	RFL(XU10J2U)	12/01 ⇨
BOXER I 2.0 4x4	--	03/96 ⇨ 09/98
BOXER I 2.0 i	RFW(XU10J2)	03/94 ⇨ 04/02
BOXER I 2.0 i 4x4	RFW(XU10J2)	08/96 ⇨ 04/02
309 II 1.6	BDZ(XU5M)	07/89 ⇨ 12/93
405 II 1.6	BDY(XU5M2Z), BDY(XU5M3Z), BDZ(XU5M), BFZ(XU5JP)	08/92 ⇨ 05/97
405 II 1.8	LFZ(XU7JP)	08/92 ⇨ 10/96
405 II 1.9	XU9J2/D6D	01/93 ⇨ 12/96
405 II 2.0	RFX(XU10J2)	08/92 ⇨ 10/96
405 II 2.0 4x4	RFX(XU10J2)	08/92 ⇨ 10/96
405 II 2.0 X4	RFX(XU10J2)	08/92 ⇨ 10/95
406 1.6	BFZ(XU5JP)	11/95 ⇨ 05/04
406 1.8	L6A(XU7JP), LFX(XU7JB), LFZ(XU7JP)	10/96 ⇨ 03/99
406 2.0 Turbo	RGX(XU10J2TE)	04/96 ⇨ 10/04
EXPERT I 1.8	L6B(XU7JP), LFZ(XU7JP)	09/96 ⇨
605 2.0	RFZ(XU10J2Z)	06/89 ⇨ 09/99
605 2.0 Turbo	RGX(XU10J2TE), RGY(XU10J2TE)	07/91 ⇨ 09/99
806 1.8	LFW(XU7JP)	07/95 ⇨ 08/02
806 2.0	RFU(XU10J2)	06/94 ⇨ 08/02
806 2.0 Turbo	RGX(XU10J2TE)	06/94 ⇨ 08/02
PARTNER I 1.1	HDY(TU1M), HDZ(TU1M)	06/96 ⇨
PARTNER I 1.4	KFX(TU3JP)	06/96 ⇨ 12/15
PARTNER I 1.8	LFX(XU7JB)	03/97 ⇨ 12/02
RANCH 1.1	HDY(TU1M), HDZ(TU1M)	06/96 ⇨
RANCH 1.4	KFX(TU3JP)	06/96 ⇨
RANCH 1.8	LFX(XU7JB)	05/97 ⇨

FACET 9.6089 — 07

COILS

Adatt./Suitable:

BOSCH
0 221 503 003
0 221 503 006
0 221 503 024

CITROËN
5970 49
96 062 288

DUCELLIER
2 526 035 A

HITACHI
138756
2508756

MAGNETI MARELLI
060717129012

PEUGEOT
5970 49
96 062 288

ROVER
GCL204
NEC100710

03 Supplied until depletion
- Fornibile fino ad esaurimento delle scorte
- Fourni jusqu'à épuisement du stock
- Lieferbar solange vorrat reicht
- Suministrado hasta el stock termina

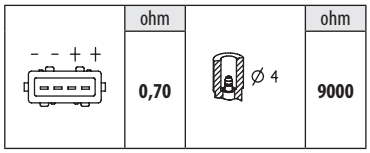

CITROËN		
AX 1.4 GTi	KFY(TU3FJ2), KFZ(TU3FJ2)	06/91 ⇨ 12/96
AX 10	CDY(TU9M), CDZ(TU9M)	07/86 ⇨ 12/98
AX 11	HDZ(TU1M)	09/86 ⇨ 12/97
AX 14	K6B(TU3FJ2), KDX(TU3M/Z), KDY(TU3FM)	04/87 ⇨ 04/97
AX 14 4x4	KDY(TU3FM)	08/91 ⇨ 12/96
ZX 1.1	HDZ(TU1M)	03/91 ⇨ 06/97
ZX 1.4	KDZ(TU3M/Z)	03/91 ⇨ 06/97
ZX 1.4 i	KDX(TU3M/Z), KDZ(TU3M/Z)	03/91 ⇨ 10/97
PEUGEOT		
106 I 1.0	CDY(TU9M), CDZ(TU9M)	09/91 ⇨ 04/96
106 I 1.1	HDZ(TU1M)	09/91 ⇨ 04/96
106 I 1.3	TU2J2	10/93 ⇨ 04/96
106 I 1.4	KDX(TU3MC)	09/91 ⇨ 04/96
106 I 1.4 i	TU3FJ, TU3FMC	01/91 ⇨ 12/96
106 I 1.4 i XSI	TU3J	09/91 ⇨ 03/96
106 I 1.4 Le Mans	KFZ(TU3J2/Z)	09/91 ⇨ 11/94
106 I 1.6	NFY(TU5J2), NFZ(TU5JP)	06/93 ⇨ 04/96
106 II 1.6 i	NFW(TU5J2), NFY(TU5J2)	05/96 ⇨ 01/01
205 II 1.0	CDZ(TU9M)	08/92 ⇨ 05/97
205 II 1.1	HDZ(TU1M)	07/89 ⇨ 09/98
205 II 1.4	KDX(TU3MC)	07/88 ⇨ 09/98
306 1.1	HDZ(TU1M)	05/93 ⇨ 05/01
306 1.4	KDX(TU3MC)	04/93 ⇨ 07/01
306 1.4 SL	KDX(TU3MC)	06/94 ⇨ 05/01
306 1.6	NFZ(TU5JP)	05/93 ⇨ 10/00
306 1.6 SR	NFZ(TU5JP)	06/94 ⇨ 10/00
405 II 1.4	TU3FM	01/93 ⇨ 12/96
ROVER		
400 II 420 Si Lux	1CA4GA15-01, 20M4F	12/95 ⇨ 03/00
600 620 Ti Vitesse	20T4G	05/94 ⇨ 08/98
800 820 I/SI	1CA4GA15-01	01/91 ⇨ 02/99
400 I 2.0 i	1CA4GA15-01	05/94 ⇨ 11/98
MINI 1300	12A2A, 12A2B, 12A2D, 12A2E, 12A2L	01/91 ⇨ 04/95

FACET 9.6091 — 07

COILS

Adatt./Suitable:

BOSCH
0 221 122 402
0 221 122 403
1 227 020 029

GENERAL MOTORS
90 277 970

OPEL
12 08 047

VAUXHALL
90277970

00 Eliminated on 23-02-2022. Please verify the availability through our local distributors
- Eliminato il 23-02-2022. Verificare la disponibilità presso i nostri distributori
- Eliminé le 23-02-2022. Verifier la disponibilité auprès de nos distributeurs sur place
- Am 23-02-2022 gestrichen. Evtl. Verfügbarkeit bitte bei unseren Händlern prüfen
- Eliminado en fecha 23-02-2022. Verificar la disponibilidad a través de nuestros distribuidores locales

960 Dry (epoxy) coil replacing original oil-bath coil version
- Bobina (resinizzata) sostituente originale a bagno d'olio
- Bobine seche, remplaçant la bobine d'origine à bain d'huile
- Trockenspule, die die Originale im Ölbad ersetzt
- Bobina seca, sustituye modelo original con baño de aceite

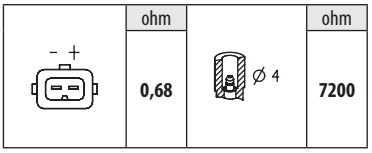

OPEL		
CALIBRA A 2.0 i	C20NE	08/89 ⇨ 12/96
CALIBRA A 2.0 i 4x4	C20NE	06/90 ⇨ 07/97
KADETT E 1.8 i	S18NV	06/85 ⇨ 08/91
KADETT E 1.8 S	E18NV	09/87 ⇨ 08/91
KADETT E 2.0 GSI	20NE, 20SEH	09/86 ⇨ 08/91
KADETT E 2.0 GSI Cat	C20NE	09/86 ⇨ 08/91
KADETT E 2.0 i	20NE	10/86 ⇨ 02/93
KADETT E 2.0 i Cat	C20NE	10/86 ⇨ 02/93
OMEGA A 1.8	E18NVR, S18NV	09/86 ⇨ 03/94
OMEGA A 1.8 N	18NV	09/86 ⇨ 08/87
OMEGA A 2.0	20SE, C20NE	09/86 ⇨ 04/94
OMEGA A 2.0 i	C20NE	09/86 ⇨ 04/94
OMEGA A 2.4 i	C24NE	09/88 ⇨ 03/94
OMEGA A 3.0	C30LE, C30NE	03/87 ⇨ 03/94
OMEGA A 3.0 Cat	C30NE	03/87 ⇨ 03/94
OMEGA B 2.0	20SE	03/94 ⇨ 12/00
SENATOR B 3.0	C30LE	09/87 ⇨ 09/93
SENATOR B 3.0 i Cat	C30NE	01/88 ⇨ 09/93
VECTRA A 1.8 S	E18NVR	09/88 ⇨ 07/89
VECTRA A 1.8 S 4x4	E18NVR	01/89 ⇨ 07/89
VECTRA A 2.0 i	20NE, 20SEH	09/88 ⇨ 09/92
VECTRA A 2.0 i 4x4	20NE, 20SEH	01/89 ⇨ 07/92
VECTRA A 2.0 i Cat	C20NE	09/88 ⇨ 11/95
VECTRA A 2.0 i Cat 4x4	C20NE	01/89 ⇨ 11/95
VECTRA A 2.0 i GT	20SEH	09/88 ⇨ 11/95
VAUXHALL		
CALIBRA 2.0 i	C20NE	06/90 ⇨ 07/97
CALIBRA 2.0 i 4x4	C20NE	06/90 ⇨ 07/97
OMEGA B 2.0	20SE	09/95 ⇨ 09/96

FACET 9.6092 — 07

COILS

Adatt./Suitable:

BOSCH
0 221 122 408
0 221 122 409
1 220 522 019
1 221 122 409
F 000 ZS0 001

GENERAL MOTORS
30 584 237
90 350 021

OPEL
12 08 053

SAAB
12 08 053
30 584 237
42 26 031
51 71 111
90 350 021
90 350 987
90 369 434

SCANIA
30584237
4226031
5171111

[960] **Dry (epoxy) coil replacing original oil-bath coil version**
- Bobina (resinizzata) sostituente originale a bagno d'olio
- Bobine seche, remplaçant la bobine d'origine à bain d'huile
- Trockenspule, die die Originale im Ölbad ersetzt
- Bobina seca, sustituye modelo original con baño de aceite

	ohm		ohm
- +	0,68	Ø 4	7200

OPEL		
ASTRA F 1.6	16LZ2, 16NZ2	09/94 ⇨ 09/98
ASTRA F 1.8 i	C18NZ	09/91 ⇨ 09/98
ASTRA F 1.8 i 16V	18SE	09/95 ⇨ 09/96
ASTRA F 2.0 i	C20NE	09/91 ⇨ 09/98
CALIBRA A 2.0 i	C20NE	08/89 ⇨ 12/96
CALIBRA A 2.0 i 4x4	C20NE	06/90 ⇨ 07/97
FRONTERA A 2.0 i	C20NE	03/92 ⇨ 10/98
FRONTERA A 2.4 i	C24NE	03/92 ⇨ 10/98
KADETT E 1.8 i	S18NV	06/85 ⇨ 08/91
KADETT E 1.8 S	E18NV	09/87 ⇨ 08/91
KADETT E 2.0 GSI	20NE, 20SEH	09/86 ⇨ 08/91
KADETT E 2.0 GSI Cat	C20NE	09/86 ⇨ 08/91
KADETT E 2.0 i	20NE	10/86 ⇨ 02/93
KADETT E 2.0 i Cat	C20NE	10/86 ⇨ 02/93
OMEGA A 1.8	E18NVR, S18NV	09/86 ⇨ 03/94
OMEGA A 1.8 N	18NV	09/86 ⇨ 08/87
OMEGA A 2.0	20SE, C20NE	09/86 ⇨ 04/94
OMEGA A 2.0 i	C20NE	09/86 ⇨ 04/94
OMEGA A 2.4 i	C24NE	09/88 ⇨ 03/94
OMEGA A 2.6 i	C26NE	09/90 ⇨ 03/94
OMEGA A 3.0	C30LE, C30NE	03/87 ⇨ 03/94
OMEGA A 3.0 24V	C30SE	09/89 ⇨ 03/94
OMEGA A 3.0 24V Omega 3000	C30SE	09/88 ⇨ 04/94
OMEGA A 3.0 Cat	C30NE	03/87 ⇨ 03/94
OMEGA B 2.0	20SE	03/94 ⇨ 12/00
SENATOR B 3.0	C30LE	09/87 ⇨ 09/93
SENATOR B 3.0 24V	C30SE	09/89 ⇨ 09/93
SENATOR B 3.0 i Cat	C30NE	01/88 ⇨ 09/93
VECTRA A 1.8 S	E18NVR	09/88 ⇨ 07/89
VECTRA A 1.8 S 4x4	E18NVR	01/89 ⇨ 07/89
VECTRA A 2.0 i	20NE, 20SEH	09/88 ⇨ 09/92
VECTRA A 2.0 i 4x4	20NE, 20SEH	01/89 ⇨ 07/92
VECTRA A 2.0 i Cat	C20NE	09/88 ⇨ 11/95
VECTRA A 2.0 i Cat 4x4	C20NE	01/89 ⇨ 11/95
VECTRA A 2.0 i GT	20SEH	09/88 ⇨ 11/95

SAAB		
9-3 2.0 i	B204I	02/98 ⇨ 08/03
9-3 2.0 SE Turbo	B204R	02/98 ⇨ 08/03
9-3 2.0 Turbo	B204E, B204L, B205E, B205L, B205R	02/98 ⇨ 08/03
9-3 2.3	B235R	09/99 ⇨ 01/02
9-3 2.3 i	B234I	02/98 ⇨ 08/03

SAAB		
900 II 2.0 i	B204I, B206I	07/93 ⇨ 02/98
900 II 2.3 -16	B234I	07/93 ⇨ 02/98

VAUXHALL		
ASTRA III 1.8 i	C18NZ	09/91 ⇨ 09/98
ASTRA III 1.8 i 16V	18SE	09/95 ⇨ 02/98
ASTRA III 2.0 i	C20NE	09/91 ⇨ 09/98
CALIBRA 2.0 i	C20NE	06/90 ⇨ 07/97
CALIBRA 2.0 i 4x4	C20NE	06/90 ⇨ 07/97
FRONTERA A 2.0	C20NE	04/95 ⇨ 08/98
FRONTERA A 2.0 i	C20NE	03/92 ⇨ 10/98
FRONTERA A 2.4 i	C24NE	03/92 ⇨ 10/98
OMEGA B 2.0	20SE	09/95 ⇨ 09/96

FACET 9.6094 — 07

COILS

Adatt./Suitable:

BOSCH
0 221 122 369

GENERAL MOTORS
90 240 252

OPEL
12 08 041

VAUXHALL
90240252

[03] **Supplied until depletion**
- Fornibile fino ad esaurimento delle scorte
- Fourni jusqu'à épuisement du stock
- Lieferbar solange vorrat reicht
- Suministrado hasta el stock termina

[960] **Dry (epoxy) coil replacing original oil-bath coil version**
- Bobina (resinizzata) sostituente originale a bagno d'olio
- Bobine seche, remplaçant la bobine d'origine à bain d'huile
- Trockenspule, die die Originale im Ölbad ersetzt
- Bobina seca, sustituye modelo original con baño de aceite

	ohm		ohm
6.4 Ø 4 + -	0,72	Ø 8.2	7200

OPEL		
ASCONA C 1.8	E18NV	09/87 ⇨ 08/88
ASCONA C 1.8 E	S18NV	01/85 ⇨ 08/86
ASCONA C 2.0 i	20NE	09/86 ⇨ 08/88
ASCONA C 2.0 i Cat	C20NE	09/86 ⇨ 08/88
ASCONA C 2.0 i GT	20SEH	03/87 ⇨ 08/88
KADETT E 1.8 i	S18NV	06/85 ⇨ 08/91
KADETT E 1.8 S	E18NV	09/87 ⇨ 08/91
KADETT E 2.0 GSI	20NE, 20SEH	09/86 ⇨ 08/91
KADETT E 2.0 GSI Cat	C20NE	09/86 ⇨ 08/91
KADETT E 2.0 i	20NE	10/86 ⇨ 02/93
KADETT E 2.0 i Cat	C20NE	10/86 ⇨ 02/93
OMEGA A 1.8	E18NVR, S18NV	09/86 ⇨ 03/94
OMEGA A 1.8 N	18NV	09/86 ⇨ 08/87
OMEGA A 2.0	20SE, C20NE	09/86 ⇨ 04/94
OMEGA A 2.0 i	C20NE	09/86 ⇨ 04/94
OMEGA A 3.0	C30LE, C30NE	03/87 ⇨ 03/94
OMEGA A 3.0 Cat	C30NE	03/87 ⇨ 03/94
OMEGA B 2.0	20SE	03/94 ⇨ 12/00
SENATOR B 3.0	C30LE	09/87 ⇨ 09/93
SENATOR B 3.0 i Cat	C30NE	01/88 ⇨ 09/93

VAUXHALL		
OMEGA B 2.0	20SE	09/95 ⇨ 09/96

FACET 9.6096 — 05

COILS

Adatt./Suitable:

BOSCH
0 986 221 033

HITACHI
138738
2508738

MAGNETI MARELLI
060708049010
060708149010
060717051012
BAE 800 EK
BAE 801 EK

RENAULT
77 00 107 269

SEAT
SE 028915.000B

	ohm		ohm
+ + -	0,54	Ø 4	7500

RENAULT		
ESPACE III 2.0	F3R728, F3R729, F3R742, F3R768, F3R769	11/96 ⇨ 10/00
LAGUNA I 1.8	F3P670, F3P674, F3P676, F3P678	06/95 ⇨ 03/01
LAGUNA I 2.0	--, F3R611, F3R728, F3R729, F3R768	11/93 ⇨ 03/01
MEGANE I 2.0	F3R262, F3R264, F3R750, F3R791	01/97 ⇨ 08/03
MEGANE I 2.0 i	F3R750, F3R751, F3R752, F3R791, F3R796, F3R797, F3R798	01/96 ⇨ 08/03
MEGANE I 2.0 RT	F3R750, F3R751, F3R752, F3R791, F3R796, F3R797, F3R798	10/96 ⇨ 02/99
MEGANE SCÉNIC I 2.0 i	F3R750, F3R751, F3R791, F3R796, F3R797, F3R798	01/97 ⇨ 09/99
MEGANE SCÉNIC I 2.0 RXE 4x4	F3R750	05/97 ⇨ 10/99
SCÉNIC I 2.0	F3R791, F3R797, F3R798	09/99 ⇨ 08/03

SEAT		
MARBELLA 0.9 Cat	08NCB	11/96 ⇨ 10/98
TERRA 0.9 Cat	09NCB	02/92 ⇨ 12/94

FACET 9.6097 — 05

COILS

Adatt./Suitable:

BOSCH
F 005 X11 771
DENSO
029700-5430
GENERAL MOTORS
94 840 127
HOLDEN
9091902135
TOYOTA
90919-02135

[00] **Eliminated on 23-02-2022. Please verify the availability through our local distributors**

- Eliminato il 23-02-2022. Verificare la disponibilità presso i nostri distributori
- Eliminé le 23-02-2022. Verifier la disponibilité auprès de nos distributeurs sur place
- Am 23-02-2022 gestrichen. Evtl. Verfügbarkeit bitte bei unseren Händlern prüfen
- Eliminado en fecha 23-02-2022. Verificar la disponibilidad a través de nuestros distribuidores locales

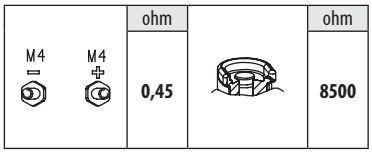

HOLDEN		
APOLLO 2.0 i	3S-FE	08/89 ⇨ 02/93
TOYOTA		
CAMRY 2.0	3S-FE	03/83 ⇨ 02/93
CAMRY 2.0 4WD	3S-FE	03/83 ⇨ 06/91
CARINA II 2.0	3S-FE	12/87 ⇨ 04/92
CARINA II 2.0 GLi	3S-FE	12/87 ⇨ 03/92
COROLLA V 1.6	4A-C, 4A-LC	08/84 ⇨ 05/89
COROLLA V 1.6 SR	4A-C	08/83 ⇨ 04/85
COROLLA VI 1.6	4A-FE	08/89 ⇨ 04/92
COROLLA VI 1.6 i	4A-FE	05/87 ⇨ 05/92
COROLLA VI 1.6 i 4WD	4A-FE	10/87 ⇨ 08/90
COROLLA VI 1.6 XLI	4A-FE	11/89 ⇨ 06/92
LITEACE 2.2	4Y-EC	01/92 ⇨ 01/95
MODEL F 2.2	4Y-EC	08/85 ⇨ 01/90
CELICA IV 2.0i [USA]	2SELC, 3S-FE	01/85 ⇨ 12/87
TERCEL 1.5	3A-C	08/83 ⇨ 05/85
TERCEL 1.5 4WD	3A-C	09/82 ⇨ 01/88
TERCEL 1.5 i [USA]	3EE	01/89 ⇨ 12/90
VAN 2.0 [USA]	3YEC	01/83 ⇨ 12/90
VAN 2.2 [USA]	4YEC	01/83 ⇨ 12/90

FACET 9.6098 — 05

COILS

Adatt./Suitable:

BOSCH
F 000 ZS0 121
HITACHI
138866
2508866
HOLDEN
9091902163
TOYOTA
90919-02163

[03] **Supplied until depletion**

- Fornibile fino ad esaurimento delle scorte
- Fourni jusqu'à épuisement du stock
- Lieferbar solange vorrat reicht
- Suministrado hasta el stock termina

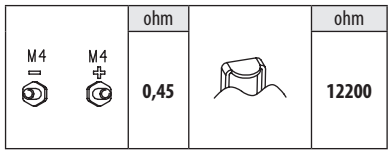

HOLDEN		
APOLLO 2.2 i	08GR-FXS	03/93 ⇨ 05/97
TOYOTA		
4 RUNNER 2.7 4WD	3RZ-FE	11/95 ⇨ 08/02
CAMRY 2.2	5S-FE	06/91 ⇨ 07/96
CARINA E 2.0	3S-FE	01/93 ⇨ 09/97
CARINA E 2.0 GLI	3S-FE	04/92 ⇨ 09/97
CARINA E 2.0 GTi	3S-GE	04/92 ⇨ 12/95
CARINA E 2.0 GTi 16V	3S-GE	03/94 ⇨ 09/97
CARINA E 2.0 i	3S-FE	12/92 ⇨ 09/97
CELICA V 2.2	5S-FE	10/89 ⇨ 12/94
COROLLA VIII 1.8 4WD	7A-FE	04/97 ⇨ 10/01
DYNA 200 2.7	3RZ-FE	06/95 ⇨ 07/01
FUNCRUISER 2.0 i 16V 4WD	3SFE	04/94 ⇨
MR 2 II 2.2 16V	5S-FE	01/90 ⇨ 06/95
HIACE IV 2.4	5YTD050W07	08/89 ⇨ 08/03
HIACE IV 2.4 4WD	5YTD050W07	08/89 ⇨ 08/95
CELICA VI 1.8 i 16V [USA] [CAN]	7A-FE	09/93 ⇨ 08/99
CELICA VI 2.2 GT	5S-FE	11/93 ⇨ 08/99
LAND CRUISER 90 2.7	3RZ-FE	06/95 ⇨ 08/02
PASEO 1.5	5E-FE	06/90 ⇨ 08/95
RAV 4 I 2.0	3S-FE	06/97 ⇨ 09/99
RAV 4 I 2.0 4WD	3S-FE	01/94 ⇨ 06/00
T100 2.7 i [USA]	3RZFE	10/93 ⇨ 07/98
TACOMA 2.4 i [USA]	2RZFE	01/95 ⇨
TERCEL 1.5 [USA]	3E	01/86 ⇨ 12/90
TERCEL 1.5 i [USA]	3EE	01/91 ⇨

FACET 9.6099 — 05

COILS

Adatt./Suitable:

BOSCH
F 000 ZS0 117
GENERAL MOTORS
94 404 545
94 853 695
HITACHI
138865
2508865
HOLDEN
9091902164
ISUZU
8-94404545-0
MAGNETI MARELLI
060717025012
TOYOTA
90919-02164

[00] **Eliminated on 02-08-2021. Please verify the availability through our local distributors**

- Eliminato il 02-08-2021. Verificare la disponibilità presso i nostri distributori
- Eliminé le 02-08-2021. Verifier la disponibilité auprès de nos distributeurs sur place
- Am 02-08-2021 gestrichen. Evtl. Verfügbarkeit bitte bei unseren Händlern prüfen
- Eliminado en fecha 02-08-2021. Verificar la disponibilidad a través de nuestros distribuidores locales

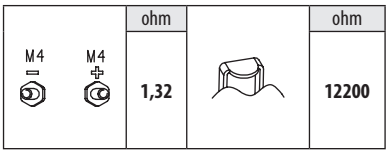

HOLDEN		
APOLLO 2.0	3S-FC	08/89 ⇨ 08/91
NOVA_LE 1.4 Hatchback	6AFC	07/89 ⇨ 07/91
NOVA_LE 1.6 Hatchback	4AFC	07/89 ⇨ 07/91
NOVA_LE 1.6 Sedan	4AFC	07/89 ⇨ 07/91
NOVA_LF 1.8i Hatchback	7AFE	08/91 ⇨ 03/93
NOVA_LF 1.8i Sedan	7AFE	08/91 ⇨ 03/93
NOVA_LG 1.6i Hatchback	4AFE	09/94 ⇨ 09/96
NOVA_LG 1.6i Sedan	4AFE	09/94 ⇨ 09/96
NOVA_LG 1.8i Hatchback	7AFE	09/94 ⇨ 09/96
NOVA_LG 1.8i Sedan	7AFE	09/94 ⇨ 09/96
TOYOTA		
CARINA II 1.6	4A-F	12/87 ⇨ 08/90
CARINA E 1.6	4A-FE	04/92 ⇨ 09/97
CARINA E 1.6 16V	4A-FE	12/94 ⇨ 09/97
CARINA E 1.6 GLI	4A-FE	04/92 ⇨ 09/97
CARINA E 1.6 i	4A-FE	02/95 ⇨ 09/97
CELICA IV 1.6	4A-L	04/86 ⇨ 08/89
COROLLA VI 1.3	2E	05/87 ⇨ 06/92
COROLLA VI 1.3 i	2E, 2E-E	08/87 ⇨ 06/92
COROLLA VI 1.6	4A-F	05/87 ⇨ 12/92
COROLLA VI 1.6 4WD	4A-F	08/87 ⇨ 08/89
COROLLA VI 1.6 GL 4WD	4A-F	10/87 ⇨ 08/90
COROLLA VI 1.6 XL	4A-F	09/89 ⇨ 04/92
COROLLA VII 1.3 12V	2E	07/92 ⇨ 04/97
COROLLA VII 1.3 XLI	4E-FE	07/92 ⇨ 04/97
COROLLA VII 1.3 XLI 16V	4E-FE	07/92 ⇨ 09/95
COROLLA VII 1.6 GLI	4A-FE	07/92 ⇨ 04/97
COROLLA VII 1.6 Si	4A-FE	07/92 ⇨ 04/97
COROLLA VII 1.8 16V 4WD	7A-FE	09/95 ⇨ 04/97
COROLLA VII 1.8 GT	7A-FE	11/92 ⇨ 05/95
COROLLA VIII 1.3	2E	05/97 ⇨ 10/01
COROLLA VIII 1.6	4A-FE	04/97 ⇨ 02/00
COROLLA VIII 1.6 Aut.	4A-FE	04/97 ⇨ 02/00
COROLLA VIII 1.8	7A-FE	10/97 ⇨ 10/01
COROLLA 1.6	4A-FE	05/97 ⇨ 09/99
HIACE 2.4 LPG	2RZE	08/95 ⇨ 06/99
HIACE IV 2.0	1RZ, 1RZ-E	08/89 ⇨ 08/04
HIACE IV 2.4	2RZ, 2RZE, 5YTD050W07	08/89 ⇨ 12/04
HIACE IV 2.4 4WD	2RZE	08/95 ⇨ 04/98
CELICA VI 1.8 i 16V	7A-FE	11/93 ⇨ 11/99
CELICA VI 1.8 i 16V [USA] [CAN]	7A-FE	09/93 ⇨ 08/99
PASEO 1.5	5E-FE	08/95 ⇨ 06/99
PASEO 1.5 EFi	5E-FE	01/97 ⇨ 12/99
STARLET 1.0	1E	12/89 ⇨ 12/92
STARLET 1.3	2E	01/96 ⇨ 07/99
STARLET 1.3 12V	2E, 2E-E	12/89 ⇨ 12/92
STARLET 1.3 12V Cat	2E-E	12/89 ⇨ 03/96
STARLET 1.3 XL	2E	12/89 ⇨ 12/91

FACET 9.6101 — 05

COILS

Adatt./Suitable:

SUZUKI
33410-57B10
33410-57B10-000
33410-80C10
33410-80C10-000

[00] **Eliminated on 02-03-2020. Please verify the availability through our local distributors**
- Eliminato il 02-03-2020. Verificare la disponibilità presso i nostri distributori
- Eliminé le 02-03-2020. Verifier la disponibilité auprès de nos distributeurs sur place
- Am 02-03-2020 gestrichen. Evtl. Verfügbarkeit bitte bei unseren Händlern prüfen
- Eliminado en fecha 02-03-2020. Verificar la disponibilidad a través de nuestros distribuidores locales

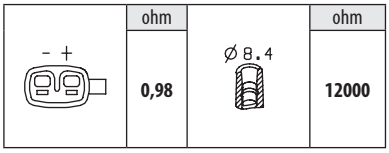

SUZUKI		
SIDEKICK 1.6 JX 4x4	G16A(8V)	04/89 ⇨ 04/96
SIDEKICK 1.6i 16V JX 4x4	G16B	04/89 ⇨ 04/96
VITARA I 1.6	G16A(8V), G16B	07/88 ⇨ 03/98
VITARA I 1.6 i 16V	G16B	07/90 ⇨ 03/99
VITARA I 1.6 i 16V Trazione integrale	G16B	07/90 ⇨ 03/98
VITARA I 1.6 Trazione integrale	G16A(8V)	07/88 ⇨ 03/98

FACET 9.6102 — 05

COILS

Adatt./Suitable:

DENSO
029700-6820

LEXUS
90919-02185

TOYOTA
90919-02185

[03] **Supplied until depletion**
- Fornibile fino ad esaurimento delle scorte
- Fourni jusqu'à épuisement du stock
- Lieferbar solange vorrat reicht
- Suministrado hasta el stock termina

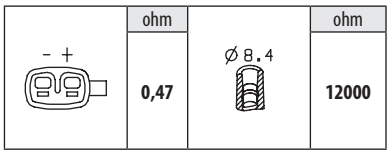

LEXUS		
ES 250	2VZ-FE	12/89 ⇨ 12/91
TOYOTA		
4 RUNNER 3.0	3VZ-E	08/88 ⇨ 11/95
4 RUNNER 3.0 [USA]	3VZ-E	01/88 ⇨ 12/91
CAMRY 2.5	2VZ-FE	10/86 ⇨ 06/91
MR 2 II 2.0 16V	3S-GE	12/89 ⇨ 09/99
MR 2 II 2.0 Turbo	3S-GTE	12/89 ⇨ 07/99
HILUX V 3.0 4WD	3VZ-E	08/89 ⇨ 11/95
LAND CRUISER 80 4.0	3F-E	01/90 ⇨ 10/92
TRUCK 3.0	3VZ-E	08/88 ⇨ 11/95
TRUCK 3.0 i [USA]	3VZ-E	01/88 ⇨ 12/90

FACET 9.6103 — 05

COILS

Adatt./Suitable:

BOSCH
F 00E 140 278

DENSO
029700-7050
029700-7051 *U

HITACHI
138868
2508868

LEXUS
90919-02197
90919-02208

MAGNETI MARELLI
060717123012

TOYOTA
19500-74040 *U
90919-02197
90919-02208

VW
J90 919 021 97

[*U] **Supplied only the coil, not the mounting bracket, not the module**
- Fornita solo la bobina, nol la staffa di fissaggio, non il modulo
- Fourni seule la bobine, non pas le support de montage, et non pas le module
- nur die Spule geliefert wird, nicht die Montagehalterung, nicht das Modul
- Suministra sólo la bobina, no el soporte de montaje, no el módulo

[03] **Supplied until depletion**
- Fornibile fino ad esaurimento delle scorte
- Fourni jusqu'à épuisement du stock
- Lieferbar solange vorrat reicht
- Suministrado hasta el stock termina

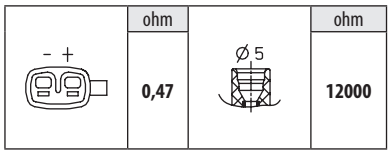

LEXUS		
GS 300	2JZ-GE	01/93 ⇨ 08/97
LS I 400	1UZ-FE	12/89 ⇨ 12/95
LS II 400	1UZ-FE	12/94 ⇨ 08/97
SC_400 4.0i	1UZFE	01/91 ⇨
TOYOTA		
4 RUNNER 2.4	22RE	08/88 ⇨ 11/95
4 RUNNER 2.4 i [USA]	22RE	01/89 ⇨ 12/93
4 RUNNER 3.0	3VZ-E	08/88 ⇨ 11/95
4 RUNNER 3.0 [USA]	3VZ-E	01/88 ⇨ 12/91
CELICA V 2.0	3S-GE	09/89 ⇨ 01/94
CELICA V 2.0 4WD	3S-GTE	10/89 ⇨ 01/94
MR 2 II 2.0	3S-FE	12/89 ⇨ 08/92
MR 2 II 2.0 16V	3S-GE	12/89 ⇨ 09/99
MR 2 II 2.0 Turbo	3S-GTE	12/89 ⇨ 07/99
MR 2 II 2.2 16V	5S-FE	01/90 ⇨ 06/95
HILUX IV 2.4 4WD	22R	10/88 ⇨ 12/97
HILUX V 2.4 4WD	22R	10/88 ⇨ 08/97
HILUX V 2.4 i 4WD	22RE	01/89 ⇨ 07/97
HILUX V 3.0 4WD	3VZ-E	08/89 ⇨ 11/95
LITEACE 1.5	5K	01/92 ⇨ 01/95
SUPRA 3.0 i	2JZ-GE	05/93 ⇨ 07/02
T100 3.0 i [USA]	3VZE	08/92 ⇨ 08/94
TRUCK 2.4	22RE	08/88 ⇨ 11/95
TRUCK 2.4 i [USA]	22RE	01/92 ⇨
TRUCK 3.0	3VZ-E	08/88 ⇨ 11/95
TRUCK 3.0 i [USA]	3VZ-E	01/91 ⇨
VW		
TARO 2.4 i 4x4	22R	06/89 ⇨ 03/97

FACET 9.6111 — 05

COILS

Adatt./Suitable:

HONDA
30520-PH7-006
30520-PH7-016

ROVER
GCL145
GCL146

[00] **Eliminated on 23-02-2022. Please verify the availability through our local distributors**

- Eliminato il 23-02-2022. Verificare la disponibilità presso i nostri distributori
- Eliminé le 23-02-2022. Verifier la disponibilité auprès de nos distributeurs sur place
- Am 23-02-2022 gestrichen. Evtl. Verfügbarkeit bitte bei unseren Händlern prüfen
- Eliminado en fecha 23-02-2022. Verificar la disponibilidad a través de nuestros distribuidores locales

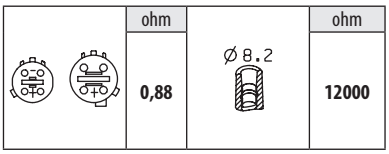

HONDA		
LEGEND I 2.7 i 24V	C27A1	10/87 ⇨ 12/90
ROVER		
800 827 24V	C27A1	08/92 ⇨ 02/99
800 827 24V I/SI Cat	C27A1	01/92 ⇨ 02/99
800 827 SI/Sterling	82RZ-FE	02/88 ⇨ 12/91
800 827 SI/Sterling Catalytic-Conv	C27A1	02/88 ⇨ 02/99
800 827 Vitesse Catalytic-Conv	C27A1	10/88 ⇨ 12/91
800 827 Vitesse/SLI	82RZ-FE	10/88 ⇨ 12/91

FACET 9.6112 — 05

COILS

Adatt./Suitable:

ACURA
30500-PE0-006

BOSCH
F 00E 140 011
F 00E 140 012

HONDA
30500-PE0-006
30500-PH1-026

[00] **Eliminated on 17-02-2020. Please verify the availability through our local distributors**

- Eliminato il 17-02-2020. Verificare la disponibilità presso i nostri distributori
- Eliminé le 17-02-2020. Verifier la disponibilité auprès de nos distributeurs sur place
- Am 17-02-2020 gestrichen. Evtl. Verfügbarkeit bitte bei unseren Händlern prüfen
- Eliminado en fecha 17-02-2020. Verificar la disponibilidad a través de nuestros distribuidores locales

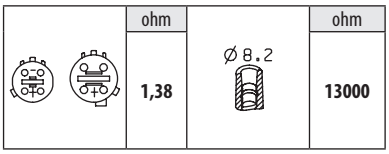

ACURA		
INTEGRA I 1.6	D16A1	01/85 ⇨ 12/90
INTEGRA I 1.6 i	D16A8	01/85 ⇨ 12/90
HONDA		
CIVIC III 1.3 [USA]	--	01/85 ⇨ 12/87
CIVIC III 1.5 i Si [USA]	--	01/84 ⇨ 12/87

FACET 9.6113 — 05

COILS

Adatt./Suitable:

ACURA
30500-PM5-A02

HONDA
30500-PM5-A02
30500-PM5-A03

MAGNETI MARELLI
060717024012

ROVER
GCL161

[03] **Supplied until depletion**

- Fornibile fino ad esaurimento delle scorte
- Fourni jusqu'à épuisement du stock
- Lieferbar solange vorrat reicht
- Suministrado hasta el stock termina

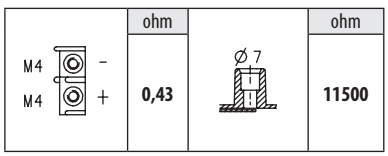

ACURA		
INTEGRA I 1.6	D16A1	01/85 ⇨ 12/90
INTEGRA I 1.6 i	D16A8	01/85 ⇨ 12/90

HONDA		
CIVIC IV 1.5 i 16V	D15B2	10/87 ⇨ 09/91
CIVIC IV 1.6 16V 4x4	D16A6	11/87 ⇨ 09/91
CIVIC IV 1.6 i 16V	D16A6, D16A9	09/87 ⇨ 09/91
CIVIC IV 1.6 i 16V 4x4	D16A6	10/89 ⇨ 09/91
CIVIC IV 1.6i 16V	D16A7, D16A8, D16A9	01/88 ⇨ 05/92
CIVIC IV 1.6i 16V 4WD	D16A1, D16Z2	01/88 ⇨ 12/91
CIVIC IV SHUTTLE 1.5 i 16V	D15B2	01/88 ⇨ 11/91
CIVIC IV SHUTTLE 1.6 4x4	D16A, D16A7	01/88 ⇨ 12/92
CIVIC IV SHUTTLE 1.6 i 16V 4WD	D16A6	01/88 ⇨ 02/95
CIVIC IV SHUTTLE 1.6i	--	01/88 ⇨ 12/91
CONCERTO 1.6 16V	D16Z2	08/89 ⇨ 03/95
CONCERTO 1.6 i 16V	D16A8, D16Z2	08/89 ⇨ 03/95
CONCERTO 1.6i DOHC	--	01/90 ⇨ 12/91
CONCERTO 1.6i SOHC	--	01/90 ⇨ 12/91
CRX II 1.6 i 16V	D16A9, D16Z5	10/87 ⇨ 02/92
ROVER		
200 II 216	D16A8	10/92 ⇨ 06/99
200 II 216 1.6i	D16A8	01/92 ⇨ 11/99
200 II 216 GSi	1GH5E-180, D16A7	10/89 ⇨ 12/95
200 II 216 GTi	D16A8, D16A9	01/90 ⇨ 10/95
400 I 416 GSI	1GH5E-180	04/90 ⇨ 04/95
400 I 416 GSI/GSE	D16A7	04/90 ⇨ 04/95
400 I 416 GTI	D16A8	04/90 ⇨ 04/95
400 I 416 GTI/GTE	D16A9	04/90 ⇨ 04/95

FACET 9.6114 — 05

COILS

Adatt./Suitable:

ACURA
30510-P73-A01
30510-PT2-006

BOSCH
F 000 ZS0 116
F 00E 140 018

HITACHI
138812
2508812

HONDA
30510-P73-A01
30510-P73-A02
30510-PT2-006

MAGNETI MARELLI
060717022012

ROVER
GCL195
NEC100530

[03] **Supplied until depletion**

- Fornibile fino ad esaurimento delle scorte
- Fourni jusqu'à épuisement du stock
- Lieferbar solange vorrat reicht
- Suministrado hasta el stock termina

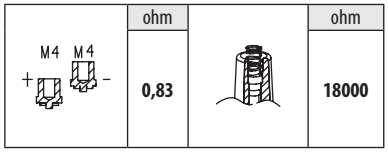

ACURA		
INTEGRA II 1.8	F18A2	10/90 ⇨ 09/93
INTEGRA III 1.8 GS-R	F18C2	10/93 ⇨ 09/01
INTEGRA III 1.8 LS	F18C1	10/93 ⇨ 09/01
INTEGRA III 1.8 Sport	F18C1	10/93 ⇨ 09/01
HONDA		
ACCORD IV 2.0 16V	F20A5	01/90 ⇨ 12/93
ACCORD IV 2.0 i 16V	F20A4, F20A7, F20A8, F20Z3	01/90 ⇨ 12/93
ACCORD IV 2.2	F22A6	05/92 ⇨ 12/93
ACCORD IV 2.2 i 16V	F22A3, F22A7, F22A8	01/90 ⇨ 12/93
ACCORD IV 2.2 i 16V Automatik	F22A3	01/90 ⇨ 03/93
ACCORD V 1.8 16V	F18A3	01/94 ⇨ 12/95
ACCORD V 2.0	F20B3	09/93 ⇨ 12/97
ACCORD V 2.0 i	F20Z2	03/93 ⇨ 01/96
ACCORD V 2.0 i LS 16V	F20B3	09/93 ⇨ 02/98

HONDA		
ACCORD V 2.0 i S	F20Z1	03/93 ⇨ 01/96
ACCORD V 2.2 i 16V	F22B4	08/95 ⇨ 12/97
ACCORD V 2.2 i ES	F22B5	09/93 ⇨ 02/98
ACCORD V 2.3 i SR	H23A3	03/93 ⇨ 01/96
ACCORD VI 2.2 Type-R	H22A7	02/99 ⇨ 12/02
CIVIC V 1.5	D15B7	08/93 ⇨ 12/95
CIVIC V 1.5 i 16V	D15B2, D15Z1	10/91 ⇨ 11/95
CIVIC V 1.5 i LSi	D15B7	08/93 ⇨ 11/95
CIVIC V 1.6 16V Vtec	D16Z6, D16Z7	10/91 ⇨ 11/95
CIVIC V 1.6 4x4	D16Z7	01/92 ⇨ 10/95
CIVIC V 1.6 EX	D16A7	08/93 ⇨ 10/95
CIVIC V 1.6 i	D16Y7	01/94 ⇨ 11/95
CIVIC V 1.6 i Vtec	B16A2, D16Z9	01/94 ⇨ 03/96
CIVIC V 1.6 VTi	B16A2	10/91 ⇨ 11/95
CIVIC V 1.6 VTi 16V	B16A2	10/91 ⇨ 11/95
BALLADE 1.6i	B16A6	01/97 ⇨ 02/01
BALLADE 1.8 i	B18B4	01/96 ⇨ 02/01
CIVIC IV 1.6i	--	01/90 ⇨ 12/91
CIVIC VI 1.4 i	D14A2, D14A3, D14Z1, D14Z2, D14Z4	06/95 ⇨ 02/01
CIVIC VI 1.4 i S	D14A2, D14Z2, D14Z4	11/95 ⇨ 02/01
CIVIC VI 1.4i 16V	D14Z1	11/98 ⇨ 03/01
CIVIC VI 1.5	D15Z3	11/95 ⇨ 12/96
CIVIC VI 1.5 16V	D15Z6, D15Z8	01/97 ⇨ 02/01
CIVIC VI 1.5 i	D15Z6, D15Z8	11/95 ⇨ 02/01
CIVIC VI 1.5 i Vtec-E	D15Z3	09/94 ⇨ 01/97
CIVIC VI 1.6	--, D16Y2	10/95 ⇨ 03/01
CIVIC VI 1.6 16V	D16B2, D16W3	01/97 ⇨ 02/01
CIVIC VI 1.6 i	D16Y3	09/94 ⇨ 03/00
CIVIC VI 1.6 i Vtec	B16A2, D16Y2, D16Y8	09/94 ⇨ 02/01
CIVIC VI 1.6 VTi	B16A2	11/95 ⇨ 02/01
CIVIC VI 1.6i 16V	D16Y7	01/96 ⇨
CIVIC VI 1.6i 16V Vtec	D16Y8	01/96 ⇨ 09/99
CIVIC VI 1.8 16V	B18C4	01/97 ⇨ 02/01
CIVIC VI 1.8 i 16V VTi Vtec	D18C4	01/97 ⇨ 12/98
CR-V I 2.0	B20Z1	04/99 ⇨ 02/02
CR-V I 2.0 16V 4WD	B20B, B20B3, B20B9, B20Z1, B20Z3	10/95 ⇨ 02/02
CR-V I 2.0 i 16V	B20B3, B20B4, B20B9, B20Z3	02/97 ⇨ 04/99
CRX III 1.6 ESi	D16Y8, D16Z6	03/92 ⇨ 12/98
CRX III 1.6 i VTi	B16A2	03/92 ⇨ 12/98
HR-V 1.6 16V	D16W1	03/99 ⇨
HR-V 1.6 16V 4WD	D16W1, D16W5	03/99 ⇨
HR-V 1.6i 16V	D16W2	04/99 ⇨
INTEGRA 1.8 i	B18B1, B18C3	01/98 ⇨
INTEGRA 1.8 Type-R	B18C6	11/97 ⇨ 10/01
LOGO 1.3	D13B7	03/99 ⇨ 03/02
PRELUDE IV 2.0 i 16V	F20A4	02/92 ⇨ 09/96
PRELUDE IV 2.2 i 16V Vtec	H22A2	02/93 ⇨ 09/96
PRELUDE IV 2.3 i 16V	H23A2	02/92 ⇨ 09/96
PRELUDE V 2.0 16V	F20A4	10/96 ⇨ 10/00
PRELUDE V 2.2 16V	H22A5, H22A8	10/96 ⇨ 10/00
PRELUDE V 2.2 i 16V	F22A2	10/96 ⇨ 10/01
PRELUDE V 2.2 i 16V VTi-R	H22A8	10/98 ⇨ 12/01
PRELUDE V 2.2 Si	F22Z6	03/97 ⇨ 07/02
SHUTTLE 2.2 16V	F22B8	10/94 ⇨ 02/98
ROVER		
400 II 416 Si	D16Y2, D16Y3, D16B2	03/95 ⇨ 03/00
600 618 i/Si	F18A3	03/96 ⇨ 02/99
600 620 i	F20Z2	08/93 ⇨ 06/96
600 620 Si	F20Z1	08/93 ⇨ 02/99
600 623 Si	H23A3	08/93 ⇨ 06/99

FACET 9.6115 — 05

COILS

Adatt./Suitable:

ACURA
30500-PR4-A02
BOSCH
F 00E 140 015
HONDA
30500-PR4-A02
MAGNETI MARELLI
060717023012

03 Supplied until depletion
- Fornibile fino ad esaurimento delle scorte
- Fourni jusqu'à épuisement du stock
- Lieferbar solange vorrat reicht
- Suministrado hasta el stock termina

	ohm		ohm
M4 (-) / M4 (+)	0,69	Ø 7	11500

ACURA		
INTEGRA II 1.8	F18A2	10/90 ⇨ 09/93
HONDA		
CIVIC IV 1.5	D15B1	01/88 ⇨ 12/89
CIVIC IV 1.5 i 16V	D15B2	10/87 ⇨ 09/91
CIVIC IV 1.6 i 16V	D16Z2	10/87 ⇨ 09/91
CIVIC IV 1.6 i 16V 4x4	D16Z2	01/89 ⇨ 12/91
CIVIC IV 1.6i	--	01/90 ⇨ 12/91
CIVIC IV 1.6i 16V	D16A1	01/88 ⇨ 12/91
CIVIC IV SHUTTLE 1.5 i 16V	D15B2	01/88 ⇨ 11/91
CIVIC IV SHUTTLE 1.6i	--	01/88 ⇨ 12/91
CIVIC IV SHUTTLE 1.6i 16V 4WD	D16Z2	01/88 ⇨ 12/92
CIVIC V 1.5	D15B2	01/92 ⇨ 12/92
CONCERTO 1.5 i	--	01/90 ⇨ 12/91
CONCERTO 1.5 i 16V	D15B2	08/89 ⇨ 05/95
CRX II 1.6 i 16V Vtec	B16A1	10/89 ⇨ 02/92

FACET 9.6116 — 05

COILS

Adatt./Suitable:

HITACHI
CM1T-209B
CM1T-217
HONDA
30500-P01-005
30500-PM3-005
30500-PM3-015
30500-PT0-005

00 Eliminated on 17-05-2021. Please verify the availability through our local distributors
- Eliminato il 17-05-2021. Verificare la disponibilità presso i nostri distributori
- Eliminé le 17-05-2021. Verifier la disponibilité auprès de nos distributeurs sur place
- Am 17-05-2021 gestrichen. Evtl. Verfügbarkeit bitte bei unseren Händlern prüfen
- Eliminado en fecha 17-05-2021. Verificar la disponibilidad a través de nuestros distribuidores locales

	ohm		ohm
4.8 (-) (+)	0,65	Ø 7	16000

HONDA		
ACCORD IV 1.8	--	01/90 ⇨ 12/91
ACCORD IV 2.0 16V	F20A2, F20A3, F20A6	01/90 ⇨ 03/93
CIVIC V 1.3	D13B2	01/92 ⇨ 12/92
CIVIC V 1.3 16V	D13B2	10/91 ⇨ 11/95
CIVIC IV 1.2	D12B1	01/88 ⇨ 12/91
CIVIC IV 1.3	D13B1	10/87 ⇨ 12/89
CIVIC IV 1.3 [USA]	--	09/87 ⇨ 12/89
CIVIC IV 1.3 16V Cat	D13B2	09/89 ⇨ 09/91
CIVIC IV 1.4 L	D14A1	10/87 ⇨ 12/89
CIVIC IV 1.4i 16V	D14A1	01/90 ⇨ 12/91
CIVIC IV 1.6 16V 4x4	D16A6	11/87 ⇨ 09/91
CIVIC IV 1.6 i 16V	D16A6	10/87 ⇨ 09/91
CIVIC IV 1.6 i 16V 4x4	D16A6	10/89 ⇨ 09/91
CIVIC IV 1.6i 16V 4WD	D16A1, D16Z2	01/88 ⇨ 12/91
CIVIC IV SHUTTLE 1.4 i 16V	D14A1	01/88 ⇨ 12/92
CIVIC IV SHUTTLE 1.6 i 16V 4WD	D16A6	01/88 ⇨ 02/95
CONCERTO 1.4	D14A1	08/89 ⇨ 10/92
CONCERTO 1.6i	D16A	01/90 ⇨ 12/91

FACET 9.6119 — 05

COILS

Adatt./Suitable:

BOSCH
F 005 X03 219
F 00E 140 476

DAEWOO
96320818 *U
96336522 *U

DENSO
DIC-0116

GENERAL MOTORS
94 136 766

HITACHI
CM1T-205

HOLDEN
2243342L00
2243342L10

HYUNDAI
AA100-18100B *1

ISUZU
8-94136766-0

KIA
AA100-18-100B *1

MAGNETI MARELLI
060717106012

NISSAN
22433-18R10
22433-42L10

OPEL
42 94 029

*1 **Without fastening clamp**
- Senza staffa di fissaggio
- sans bride de fixation
- ohne Befestigungsbügel
- sin estribo de sujeción

*U **Supplied only the coil, not the mounting bracket, not the module**
- Fornita solo la bobina, nol la staffa di fissaggio, non il modulo
- Fourni seule la bobine, non pas le support de montage, et non pas le module
- nur die Spule geliefert wird, nicht die Montagehalterung, nicht das Modul
- Suministra sólo la bobina, no el soporte de montaje, no el módulo

03 **Supplied until depletion**
- Fornibile fino ad esaurimento delle scorte
- Fourni jusqu'à épuisement du stock
- Lieferbar solange vorrat reicht
- Suministrado hasta el stock termina

245 **without fastening clamp**
- senza staffa fissaggio
- sans bride de fixation
- ohne Befestigungsbügel
- sin estribo de sujeción

6.4	ohm	Ø 8.2	ohm
	1,2		9300

CHEVROLET		
SPARK I 0.8	F8CV	09/00 ⇨ 12/06
DAEWOO		
MATIZ 0.8	F8CV	08/98 ⇨
HOLDEN		
CALAIS 3.0 Executive	--	10/88 ⇨ 09/90
CALAIS_VL 2.0i	2.0PFI	01/86 ⇨ 07/88
CALAIS_VL 3.0i Turbo	3.0EFITURBO	01/86 ⇨ 07/88
COMMODORE 3.0 EFi	255263088	03/86 ⇨ 09/88
COMMODORE 3.0 EFi Turbo	RB30ET	01/86 ⇨ 08/88
COMMODORE_VL 2.0i	2.0PFI	01/86 ⇨ 07/88
COMMODORE_VL 2.0i Wagon	2.0PFI	01/86 ⇨ 07/88
ISUZU		
AMIGO 2.3i [USA]	LW3	01/88 ⇨
PICK-UP 2.3i [USA]	LW3	01/88 ⇨
TROOPER 2.3	4ZD1	11/85 ⇨ 12/91
KIA		
TOWNER 0.8 Gasoline	--	10/97 ⇨
OPEL		
MIDI 2.0 i	20PET	09/92 ⇨ 08/94
MIDI 2.0 i 4x4	20PET	09/92 ⇨ 08/94

FACET 9.6128 — 07

COILS

Adatt./Suitable:

BOSCH
9 220 081 505

HITACHI
138735
2508735

MAGNETI MARELLI
060705409010
060717020012
607 054 09
BAE 504 L

RENAULT
77 00 749 450

03 **Supplied until depletion**
- Fornibile fino ad esaurimento delle scorte
- Fourni jusqu'à épuisement du stock
- Lieferbar solange vorrat reicht
- Suministrado hasta el stock termina

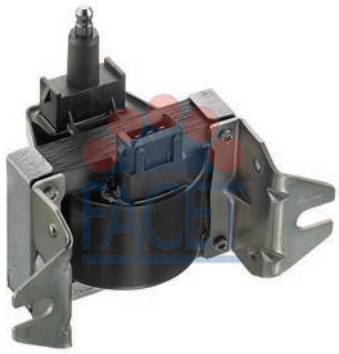

	ohm	Ø 6.3	ohm
	0,47		5000

RENAULT		
19 II 1.8	8NA20S, F3P708	04/92 ⇨ 06/96
CLIO I 1.2	C3G720	06/94 ⇨ 02/98
EXPRESS 1.2	C3G710, C3G712	07/95 ⇨ 10/99
EXPRESS 1.4i	C3G/C3J	01/85 ⇨ 10/90
RAPID 1.2	C3G710, C3G712	09/91 ⇨ 03/98
TWINGO I 1.2	C3G700, C3G702	03/93 ⇨ 10/96

FACET 9.6133 — 05

COILS

Adatt./Suitable:

BOSCH
F 00E 140 248

FORD
F1CZ-12029-A

MAZDA
B6S7-18-10XA
B6S8-18-10XA

Motorcraft
DGE-447

03 **Supplied until depletion**
- Fornibile fino ad esaurimento delle scorte
- Fourni jusqu'à épuisement du stock
- Lieferbar solange vorrat reicht
- Suministrado hasta el stock termina

240 **with fastening clamp**
- con staffa fissaggio
- avec bride de fixation/boulon en U/ étrier
- mit Befestigungsbügel
- con estribo de sujeción

+ -	ohm	Ø 8.2	ohm
	1		14500

MAZDA		
323 VI C 1.6	B6E	09/89 ⇨ 06/91
323 VI C 1.6 16V	B6	03/91 ⇨ 10/94
323 VI F 1.6	B6E	09/89 ⇨ 06/91
323 VI F 1.6 16V	B6	03/91 ⇨ 10/94
323 VI F 1.8 16V	BP	08/89 ⇨ 07/94
323 VI F 1.8 16V GT	BP(DOHC)	08/89 ⇨ 07/94
323 VI F 1.8i 16v GRSi	BP31	06/89 ⇨ 03/91
323 VI S 1.3 16V	B3(16V)	04/91 ⇨ 07/94
323 VI S 1.6	B6E	09/89 ⇨ 06/91
323 VI S 1.6 16V	B6	08/89 ⇨ 10/96
323 VI S 1.8 16V	BP52	08/89 ⇨ 07/94
323 VI S 1.8 16V 4WD	BP52	09/91 ⇨ 07/94
323 VI S 1.8 16V Turbo 4WD	BPTurbo	01/91 ⇨ 07/94
323 VI 1.3 16V	B384, B386, B387	06/89 ⇨ 03/91
323 VI 1.8i 16v 4x4	BP51	06/89 ⇨ 03/91
323 VI 1.8i 16v GRSi	BP22	06/89 ⇨ 03/91
323 VI 1.8i 16v GT Formula 4	BP55	04/91 ⇨ 04/94
323 VI 1.8i 16v GT-R Formula 4	BP5J	04/91 ⇨ 04/94
323 VI 1.8i 16v Turbo 4x4	BP55	06/89 ⇨ 03/91
MX-3 1.6	B69	05/91 ⇨ 10/93
PROTEGE 1.8i DOHC [USA]	--	01/90 ⇨
PROTEGE 1.8i OHC [USA]	--	01/90 ⇨

FACET 9.6152 — 05

COILS

Adatt./Suitable:

DAIHATSU
90048-52072-000
90048-52095-000

[00] **Eliminated on 09-09-2019. Please verify the availability through our local distributors**
- Eliminato il 09-09-2019. Verificare la disponibilità presso i nostri distributori
- Eliminé le 09-09-2019. Verifier la disponibilité auprès de nos distributeurs sur place
- Am 09-09-2019 gestrichen. Evtl. Verfügbarkeit bitte bei unseren Händlern prüfen
- Eliminado en fecha 09-09-2019. Verificar la disponibilidad a través de nuestros distribuidores locales

[240] **with fastening clamp**
- con staffa fissaggio
- avec bride de fixation/boulon en U/ étrier
- mit Befestigungsbügel
- con estribo de sujeción

	ohm		ohm
- +	1,5	Ø 8.2	25500

DAIHATSU		
CHARADE III 1.0i	G102	01/88 ⇨
CHARADE III 1.3	HC-C	09/88 ⇨ 02/93
CHARADE III 1.3 i	HC-E	06/88 ⇨ 12/92
CHARADE III 1.3 i 4WD	HC-E	06/88 ⇨ 01/93
HIJET II 1.3 i 16V	HC-E	05/98 ⇨ 10/05

FACET 9.6165 — 05

COILS

Adatt./Suitable:

HITACHI
CM12-100

SUBARU
22433-AA230
22433-AA360

	ohm		ohm
- + -	0,78	Ø 8.2	14000

SUBARU		
IMPREZA I 1.6	EJ16E	01/93 ⇨ 12/00
IMPREZA I 1.6 i	8F140GA	08/92 ⇨ 12/00

SUBARU		
IMPREZA I 1.6 i AWD	8F140GA	08/92 ⇨ 12/00
IMPREZA I 1.8	EJ18	01/93 ⇨ 10/95
IMPREZA I 1.8 i	EJ18E	11/95 ⇨ 06/96
IMPREZA I 1.8 i AWD	EJ18, EJ18E	08/92 ⇨ 12/00
LEGACY I 2.0	EJ20E	08/91 ⇨ 12/93
LEGACY I 2.0i 16V	EJ20E	08/91 ⇨ 12/93
LEGACY I 2.2i	--	01/90 ⇨
LEGACY I 2.2i [USA]	--	01/90 ⇨
LEGACY I 2.2i 16v	EJ22E	08/89 ⇨ 10/91
LEGACY I 2.2i Turbo [USA]	--	01/90 ⇨
LEGACY I 2000	EJ20EMPI	09/91 ⇨ 12/93
LEGACY I 2000 4WD	EJ20EMPI	08/91 ⇨ 07/94
LEGACY I 2200 4WD	EJ22EMPI	01/89 ⇨ 07/94
LEGACY I 2200 Super 4WD	EJ22EMPI	01/89 ⇨ 07/94
LEGACY II 1.8 4WD	EJ18E	05/96 ⇨ 09/98

FACET 9.6166 — 05

COILS

Adatt./Suitable:

HITACHI
138737
2508737

SUBARU
22433-AA240
22433-AA370

	ohm		ohm
- + -	0,78	Ø 8.2	20000

SUBARU		
IMPREZA I 2.0	EJ20E	09/96 ⇨ 08/98
IMPREZA I 2.0 AWD	EJ20E	12/95 ⇨ 12/00
IMPREZA I 2.0 i	EJ20E	11/95 ⇨ 09/00
IMPREZA I 2.0 i AWD	EJ20	10/95 ⇨ 12/00
IMPREZA I 2.0 i Turbo AWD	EJ20(Turbo)	03/94 ⇨ 12/00
IMPREZA I 2.0 Turbo AWD	EJ20G	12/96 ⇨ 12/00
IMPREZA I 2.0 Turbo GT AWD	EJ20(Turbo)	03/94 ⇨ 12/00
IMPREZA I 2.2 i	EJ22E	11/93 ⇨ 08/98
LEGACY II 2.0 i	EJ20EMPI	09/94 ⇨ 03/99
LEGACY II 2.0 i 4WD	EJ201, EJ20E	09/94 ⇨ 03/99
LEGACY II 2.2	2LF479Q3	07/94 ⇨ 11/98
LEGACY II 2.2 i 4WD	EJ22EMPI	02/94 ⇨ 03/99
LEGACY II 2.5	EJ25D	01/96 ⇨ 12/99
LEGACY II 2.5 i 4WD	EJ25D	06/96 ⇨ 03/99
LEGACY I 2.2i	--	01/90 ⇨
LEGACY I 2.2i [USA]	--	01/90 ⇨
LEGACY I 2.2i Turbo [USA]	--	01/90 ⇨

FACET 9.6169 — 05

COILS

Adatt./Suitable:

BOSCH
1 227 030 051
1 227 030 052

MAGNETI MARELLI
060717006012

VW
357 905 105

[03] **Supplied until depletion**
- Fornibile fino ad esaurimento delle scorte
- Fourni jusqu'à épuisement du stock
- Lieferbar solange vorrat reicht
- Suministrado hasta el stock termina

	ohm		ohm
+ M5 − M5	0,47	Ø 4	8500

VW		
CORRADO 2.9 VR6	ABV	08/91 ⇨ 12/95
GOLF III 2.8 VR6	AAA	01/92 ⇨ 09/97
PASSAT III 2.8 VR6	AAA	06/91 ⇨ 05/97
VENTO 2.8 VR6	AAA	01/92 ⇨ 09/98

FACET 9.6172 — 07

COILS

Adatt./Suitable:

BOSCH
0 221 503 700
0 986 221 093
DUCELLIER
2 526 055 A
GENERAL MOTORS
90 458 250
HITACHI
138762
2508762
HOLDEN
90458250
MAGNETI MARELLI
060717044012
OPEL
12 08 071
90458250
SAGEM
2 526 055 A
SIEMENS
5WK 90611
VAUXHALL
90458250

[03] **Supplied until depletion**
- Fornibile fino ad esaurimento delle scorte
- Fourni jusqu'à épuisement du stock
- Lieferbar solange vorrat reicht
- Suministrado hasta el stock termina

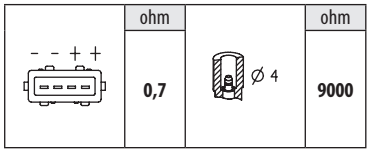

HOLDEN		
ASTRA_TR 1.8i 16v Hatchback	C18SEL	09/96 ⇨ 09/98
ASTRA_TR 1.8i 16v Sedan	C18SEL	09/96 ⇨ 09/98
ASTRA_TR 2.0i 16V Hatchback	X20XEV	09/96 ⇨ 09/98
CALIBRA_YE 2.0i 16V	X20XEV	08/95 ⇨ 10/97
OPEL		
ASTRA F 1.8	Z18XEL	02/03 ⇨ 07/04
ASTRA F 1.8 i 16V	C18SEL, C18XE, C18XEL, X18XE	06/93 ⇨ 03/01
ASTRA F 2.0 i 16V	X20XER, X20XEV	02/95 ⇨ 08/00
ASTRA G 2.0 16V	X20XEV	02/98 ⇨ 01/05
ASTRA G 2.0 16V OPC	X20XER	11/99 ⇨ 09/02
CALIBRA A 2.0 i 16V	X20XEV	02/94 ⇨ 07/97
CALIBRA A 2.0 i 16V 4x4	X20XEV	02/94 ⇨ 07/97
OMEGA B 2.0 16V	X20XEV	03/94 ⇨ 09/99
VECTRA 2.0	C20SEL	10/95 ⇨ 04/02
VECTRA A 2.0 i 16V	X20XEV	08/92 ⇨ 08/95
VECTRA A 2.0 i 16V 4x4	X20XEV	06/94 ⇨ 11/95
VECTRA B 1.8 FlexFuel	X18XE	01/99 ⇨ 09/00
VECTRA B 1.8 i 16V	X18XE	10/95 ⇨ 09/00
VECTRA B 2.0 i 16V	C20SEL, X20XEV	09/95 ⇨ 07/03
VECTRA B 2.2 i 16V	C22SEL	07/00 ⇨ 07/02
VAUXHALL		
ASTRA III 1.8	C18XE	09/94 ⇨ 08/96
ASTRA III 1.8 16V	C18XEL, X18XE	11/94 ⇨ 03/01
ASTRA III 1.8 i 16V	C18XE, C18XEL, X18XE	06/93 ⇨ 02/98
ASTRA III 2.0 i 16V	X20XEV	01/94 ⇨ 09/98
ASTRA IV 2.0	X20XER	10/99 ⇨ 08/00
ASTRA IV 2.0 16V	X20XEV	02/98 ⇨ 05/05
CALIBRA 2.0 i 16V	X20XEV	06/90 ⇨ 07/97
CALIBRA 2.0 i 16V 4x4	X20XEV	02/94 ⇨ 07/97
OMEGA B 2.0 16V	X20XEV	03/94 ⇨ 07/01
VECTRA B 1.8 i 16V	X18XE	09/95 ⇨ 09/00
VECTRA B 2.0 Dualfuel	X20XEV	05/98 ⇨ 01/01
VECTRA B 2.0 i 16V	X20XEV	10/95 ⇨ 01/01

FACET 9.6173 — 07

COILS

Adatt./Suitable:

BOSCH
0 221 503 001
GENERAL MOTORS
90 443 900
HITACHI
138790
2508790
HOLDEN
90443900
MAGNETI MARELLI
060717066012
OPEL
12 08 065
90443900
90449572

[00] **Eliminated on 23-02-2022. Please verify the availability through our local distributors**
- Eliminato il 23-02-2022. Verificare la disponibilità presso i nostri distributori
- Eliminé le 23-02-2022. Verifier la disponibilité auprès de nos distributeurs sur place
- Am 23-02-2022 gestrichen. Evtl. Verfügbarkeit bitte bei unseren Händlern prüfen
- Eliminado en fecha 23-02-2022. Verificar la disponibilidad a través de nuestros distribuidores locales

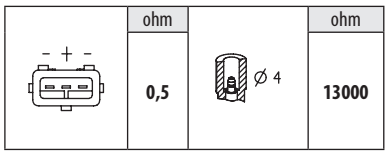

HOLDEN		
CALIBRA_YE 2.0i 16V	C20XE	09/91 ⇨ 07/95
FRONTERA_UT 2.0i	X20SE	10/95 ⇨ 03/99
OPEL		
ASTRA F 2.0 GSI 16V	C20XE	09/91 ⇨ 01/98
ASTRA F 2.0 i 16V	C20XE	03/93 ⇨ 01/98
CALIBRA A 2.0 i 16V	C20XE	06/90 ⇨ 02/94
CALIBRA A 2.0 i 16V 4x4	C20XE	06/90 ⇨ 02/94
FRONTERA A 2.0 i	X20SE	03/92 ⇨ 10/98
FRONTERA A 2.2 i	X22XE	03/95 ⇨ 10/98
OMEGA B 2.0	X20SE	03/94 ⇨ 09/99
VECTRA B 2.0 i	20NEJ	10/95 ⇨ 04/02
VAUXHALL		
ASTRA III 2.0 i 16V	C20XE	09/91 ⇨ 02/98
CALIBRA 2.0 i 16V	C20XE	06/90 ⇨ 02/94
CALIBRA 2.0 i 16V 4x4	C20XE	06/90 ⇨ 02/94
FRONTERA A 2.0	X20SE	04/95 ⇨ 08/98
FRONTERA A 2.0 i	X20SE	03/92 ⇨ 10/98
FRONTERA A 2.2 i	X22XE	03/95 ⇨ 10/98
OMEGA B 2.0	X20SE	03/94 ⇨ 09/99
VECTRA B 2.0 i	20NEJ	10/95 ⇨ 03/02

FACET 9.6175 — 05

COILS

Adatt./Suitable:

BOSCH
0 986 221 089
HITACHI
138736
2508736
MAGNETI MARELLI
060717070012
607 081 38
BAE 801 AK
RENAULT
77 00 854 306
77 00 872 265

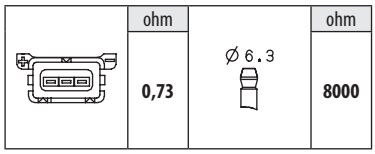

RENAULT		
21 2.0 Turbo	J7R756	02/90 ⇨ 10/92
21 2.0 Turbo 4x4	J7R756	02/90 ⇨ 10/92
ESPACE III 2.0	F3R728, F3R729, F3R768, F3R769	11/96 ⇨ 10/00
ESPACE III 3.0	Z7X775	11/96 ⇨ 10/98
LAGUNA I 1.8	F3P670, F3P674, F3P676, F3P678	06/95 ⇨ 03/01
LAGUNA I 2.0	--, F3R611, F3R728, F3R729, F3R768	11/93 ⇨ 03/01
LAGUNA I 3.0	Z7X760, Z7X765, Z7X767	11/93 ⇨ 03/01
MEGANE I 2.0	F3R262, F3R264, F3R750, F3R751, F3R752, F3R796, F3R797, F3R798	01/97 ⇨ 08/03
MEGANE I 2.0 i	F3R750, F3R751, F3R752, F3R791, F3R796, F3R797, F3R798	01/96 ⇨ 08/03
MEGANE I 2.0 RT	F3R752	10/96 ⇨ 02/99
MEGANE SCÉNIC I 2.0 RXE 4x4	F3R750	05/97 ⇨ 10/99
SCÉNIC I 2.0	F3R791, F3R797, F3R798	09/99 ⇨ 08/03

FACET 9.6176 — 05

COILS

Adatt./Suitable:

MAGNETI MARELLI
607 081 54
BAE 801 BK

RENAULT
77 00 854 307
77 00 872 692

[00] Eliminated on 22-02-2021. Please verify the availability through our local distributors

- Eliminato il 22-02-2021. Verificare la disponibilità presso i nostri distributori
- Eliminé le 22-02-2021. Verifier la disponibilité auprès de nos distributeurs sur place
- Am 22-02-2021 gestrichen. Evtl. Verfügbarkeit bitte bei unseren Händlern prüfen
- Eliminado en fecha 22-02-2021. Verificar la disponibilidad a través de nuestros distribuidores locales

	ohm		ohm
	0,73	Ø 6.3	8000

RENAULT		
21 2.0 Turbo	J7R756	02/90 ⇨ 10/92
21 2.0 Turbo 4x4	J7R756	02/90 ⇨ 10/92
ESPACE III 3.0	Z7X775	11/96 ⇨ 10/98
LAGUNA I 3.0	Z7X760, Z7X765, Z7X767	11/93 ⇨ 03/01

FACET 9.6185 — 07

COILS

Adatt./Suitable:

[00] Eliminated on 09-09-2019. Please verify the availability through our local distributors

- Eliminato il 09-09-2019. Verificare la disponibilità presso i nostri distributori
- Eliminé le 09-09-2019. Verifier la disponibilité auprès de nos distributeurs sur place
- Am 09-09-2019 gestrichen. Evtl. Verfügbarkeit bitte bei unseren Händlern prüfen
- Eliminado en fecha 09-09-2019. Verificar la disponibilidad a través de nuestros distribuidores locales

	ohm		ohm
- +	0,5	Ø 5	12500

FACET 9.6185S — 05

COILS

Adatt./Suitable:

BOSCH
F 000 ZS0 117

DENSO
029700-7700

TOYOTA
19070-74170
19080-66010
19500-74090 *U
19500-74091 *U
19500-74100 *U
19500-74120 *U
90919-02209

[*U] Supplied only the coil, not the mounting bracket, not the module

- Fornita solo la bobina, nol la staffa di fissaggio, non il modulo
- Fourni seule la bobine, non pas le support de montage, et non pas le module
- nur die Spule geliefert wird, nicht die Montagehalterung, nicht das Modul
- Suministra sólo la bobina, no el soporte de montaje, no el módulo

	ohm		ohm
- +	0,5	Ø 5	12500

TOYOTA		
CARINA E 1.6	4A-FE	04/92 ⇨ 09/97
CARINA E 1.6 16V	4A-FE	12/94 ⇨ 09/97
CARINA E 1.6 GLI	4A-FE	04/92 ⇨ 09/97
CARINA E 1.6 i	4A-FE	02/95 ⇨ 09/97
CELICA V 2.2	5S-FE	10/89 ⇨ 12/94
CELICA VI 2.0 GTi	3S-GE	08/94 ⇨ 08/99
CELICA VI 2.0 i 16V	3S-GE	11/93 ⇨ 11/99
CELICA VI 2.0 i Turbo 4WD	3S-GTE	02/94 ⇨ 11/99
CELICA VI 2.2 GT	5S-FE	11/93 ⇨ 08/99
FUNCRUISER 2.0 i 16V 4WD	3SFE	04/94 ⇨
LAND CRUISER 80 4.5	1FZ-FE	08/92 ⇨ 01/98
LAND CRUISER 80 4.5 24V	1FZ-FE	08/92 ⇨ 12/97
RAV 4 I 2.0	3S-FE	06/97 ⇨ 09/99
RAV 4 I 2.0 4WD	3S-FE	01/94 ⇨ 06/00

FACET 9.6189 — 07,5

COILS

Adatt./Suitable:

BOSCH
F 005 X11 773

DENSO
029700-6770
029700-6780
029700-7531

FORD
6 383 157
90TF-12029A-1A
E9DF-12029-AA
E9DZ-12029-A
F0TZ-12029-A
F57U-12029-AA
F57Z-12029-A
F82U-12029-AA

FORD USA
6 383 157
F0TZ-12029-A

MAGNETI MARELLI
060717047012

MAZDA
KLG4-18-100A
ZZL0-18-100
ZZM7-18-100

Motorcraft
DG 438
DG 459
DGE-446

[00] Eliminated on 23-02-2022. Please verify the availability through our local distributors

- Eliminato il 23-02-2022. Verificare la disponibilità presso i nostri distributori
- Eliminé le 23-02-2022. Verifier la disponibilité auprès de nos distributeurs sur place
- Am 23-02-2022 gestrichen. Evtl. Verfügbarkeit bitte bei unseren Händlern prüfen
- Eliminado en fecha 23-02-2022. Verificar la disponibilidad a través de nuestros distribuidores locales

	ohm		ohm
- - - +	0,5	Ø 7	13000

FORD		
ENDEAVOUR 4.0 EFI V6	--	11/03 ⇨
EVEREST 4.0 EFI V6	--	11/03 ⇨
RANGER IV 4.0	--	10/05 ⇨ 06/06
RANGER IV 4.0 4x4	--	10/05 ⇨ 06/06
FORD USA		
EXPLORER 4.0 V6 4WD	--	01/93 ⇨ 12/01
MUSTANG 4.0 V6	--	12/04 ⇨ 12/10
MAZDA		
NAVAJO 4.0i [USA]	--	01/91 ⇨

FACET 9.6196 — 05

COILS

Adatt./Suitable:

BOSCH
F 00E 140 024
NISSAN
22433-1E400
22448-1E400

[03] **Supplied until depletion**
- Fornibile fino ad esaurimento delle scorte
- Fourni jusqu'à épuisement du stock
- Lieferbar solange vorrat reicht
- Suministrado hasta el stock termina

	ohm		ohm
- +	1	Ø 8.2	14500

NISSAN		
ALTIMA 2.4	KA24DE	06/93 ⇨ 09/01
STANZA 2.4i [USA]	KA24DE	01/92 ⇨

FACET 9.6199 — 08

COILS

Adatt./Suitable:

BOSCH
F 000 ZS0 212
FORD
6 823 318
6 860 288
MAGNETI MARELLI
060717036012
MAZDA
1E05-18-100
1E05-18-100A

[00] **Eliminated on 23-02-2022. Please verify the availability through our local distributors**
- Eliminato il 23-02-2022. Verificare la disponibilità presso i nostri distributori
- Eliminé le 23-02-2022. Verifier la disponibilité auprès de nos distributeurs sur place
- Am 23-02-2022 gestrichen. Evtl. Verfügbarkeit bitte bei unseren Händlern prüfen
- Eliminado en fecha 23-02-2022. Verificar la disponibilidad a través de nuestros distribuidores locales

[240] **with fastening clamp**
- con staffa fissaggio
- avec bride de fixation/boulon en U/ étrier
- mit Befestigungsbügel
- con estribo de sujeción

	ohm		ohm
- + -	0,5	Ø 7	13000

FORD		
ESCORT V 1.6 16V XR3i	L1E	12/92 ⇨ 01/95
ESCORT V 1.6 i 16V	L1E, L1H, L1K	09/92 ⇨ 01/95
ESCORT V 1.8 16V	RDA	02/92 ⇨ 01/95
ESCORT V 1.8 16V XR3i	99BFR1740, RDA	02/92 ⇨ 01/95
ESCORT V 1.8 i 16V	99BFR1740	09/92 ⇨ 01/95
ESCORT V 1.8 XR3i 16V 4x4	99BFR1740, RDA	08/93 ⇨ 01/95
FIESTA III 1.6 i 16V	L1G	01/94 ⇨ 12/95
FIESTA III 1.8 16V	RDB	02/92 ⇨ 12/95
FIESTA III 1.8 XR2i 16V	RQC	02/92 ⇨ 12/95
MONDEO I 1.6 i 16V	L1F, L1J	02/93 ⇨ 08/96
MONDEO I 1.8 4x4	RKA	02/93 ⇨ 08/96
MONDEO I 1.8 i 16V	RKA, RKB	02/93 ⇨ 08/96
MONDEO I 1.8 i 16V 4x4	RKA	02/93 ⇨ 08/96
MONDEO I 2.0 i 16V	NGA	01/93 ⇨ 08/96
MONDEO I 2.0 i 16V 4x4	NGA	02/93 ⇨ 08/96
ORION II 1.6 i 16V	L1E, L1K	07/92 ⇨ 12/93
ORION II 1.8 i 16V	99BFR1740, RDA	01/92 ⇨ 12/93
MAZDA		
121 III 1.25	1E05, DHF, DHG	03/96 ⇨ 04/03

FACET 9.6199S — 07

COILS

Adatt./Suitable:

BOSCH
F 000 ZS0 212
FORD
5 008 193
6 860 289
928F-12029-CB
938F-12024-DA
F5RZ-12029-C
FORD AUSTRALIA
938F-12024-DA
MAZDA
1E06-18-100
Motorcraft
DG 458

[00] **Eliminated on 23-02-2022. Please verify the availability through our local distributors**
- Eliminato il 23-02-2022. Verificare la disponibilità presso i nostri distributori
- Eliminé le 23-02-2022. Verifier la disponibilité auprès de nos distributeurs sur place
- Am 23-02-2022 gestrichen. Evtl. Verfügbarkeit bitte bei unseren Händlern prüfen
- Eliminado en fecha 23-02-2022. Verificar la disponibilidad a través de nuestros distribuidores locales

[245] **without fastening clamp**
- senza staffa fissaggio
- sans bride de fixation
- ohne Befestigungsbügel
- sin estribo de sujeción

	ohm		ohm
- + -	0,5	Ø 7	13000

FORD		
FIESTA IV 1.25 i 16V	DHA, DHB, DHC, DHD, DHE, DHF, DHG	08/95 ⇨ 01/02
FIESTA 1.2	DHA, DHB, DHC, DHD, DHF, DHG	01/96 ⇨ 04/02
PUMA 1.4 16V	FHD, FHF	11/97 ⇨ 10/00
PUMA 1.7 16V	MHA, MHB	03/97 ⇨ 06/02
PUMA Racing ST 160	MHA	06/99 ⇨ 06/02

FACET 9.6212 — 07

COILS

Adatt./Suitable:

FORD
F1VU-12029A-1A
F1VY-12029-A
F50U-12029-AA
F50U-12029-BA
F50Y-12029-A
F50Y-12029-B

MAGNETI MARELLI
060801006010
BAE 680 D

Motorcraft
DG 449
DG 460
DG 461

[00] **Eliminated on 22-02-2021. Please verify the availability through our local distributors**
- Eliminato il 22-02-2021. Verificare la disponibilità presso i nostri distributori
- Eliminé le 22-02-2021. Verifier la disponibilité auprès de nos distributeurs sur place
- Am 22-02-2021 gestrichen. Evtl. Verfügbarkeit bitte bei unseren Händlern prüfen
- Eliminado en fecha 22-02-2021. Verificar la disponibilidad a través de nuestros distribuidores locales

[1187] **Without ignition firing nrs.,it can be used in the place of:**
- Senza numeri dell'ordine d'accensione, può sostituire:
- Sans nos. de sequence d'allumage, peut etre utilisé au lieu:
- Ohne Zündfolge-Nr. verwendbar als Ersatz von:
- Sin nos. de secuencia de ignición puede utilizarse en lugar:

9.6035

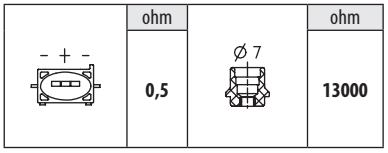

FORD		
FIESTA III 1.1	G6A, GUD, GUE	03/89 ⇨ 12/95
FIESTA III 1.3	J6B	03/89 ⇨ 02/96
FIESTA III 1.3 Cat	J6B	05/91 ⇨ 01/97
FIESTA III 1.4	F6E, FUG, FUJ	03/89 ⇨ 12/95
FIESTA III 1.4 Cat	F4A	03/89 ⇨ 12/95
FIESTA III 1.6	LUH	01/89 ⇨ 01/94
FIESTA III 1.6 i 16V	L1G	01/94 ⇨ 12/95
FIESTA III 1.6 Turbo	LHA	03/90 ⇨ 10/92
FIESTA III 1.6 XR2i	LJC, LJD	03/89 ⇨ 01/94
FIESTA III 1.8 16V	RDB	02/92 ⇨ 12/95
FIESTA III 1.8 XR2i 16V	RQC	02/92 ⇨ 12/95
ESCORT IV 1.3	JBA	07/88 ⇨ 12/94
ESCORT IV 1.4	F6B, F6D, F6F, F6G, FUA, FUC	01/86 ⇨ 12/94
ESCORT IV 1.6	LUG	04/89 ⇨ 07/90
ESCORT IV 1.6 i	L4B	01/86 ⇨ 07/90
ESCORT IV 1.6 Turbo RS	LNB	01/86 ⇨ 07/90
ESCORT IV 1.6 XR3i	LR2, LRB	01/86 ⇨ 07/90
ESCORT V 1.3	J4B, J6A	07/90 ⇨ 01/95
ESCORT V 1.4	F4B, F6F, F6G, FUH	07/90 ⇨ 01/95
ESCORT V 1.4 i	F4B	07/93 ⇨ 01/95
ESCORT V 1.6	LJF, LUJ, LUK	07/90 ⇨ 08/93
ESCORT V 1.6 16V XR3i	L1E	12/92 ⇨ 01/95
ESCORT V 1.6 i 16V	L1E, L1H, L1K	09/92 ⇨ 01/95
ESCORT V 1.8 16V XR3i	99BFR1740	09/92 ⇨ 01/95
ESCORT V 1.8 i 16V	99BFR1740	09/92 ⇨ 01/95
ESCORT V 1.8 XR3i 16V 4x4	99BFR1740	08/93 ⇨ 01/95
ESCORT VI 1.3	J6A	01/95 ⇨ 02/99
ESCORT VI 1.4	F4B	01/95 ⇨ 02/99
FIESTA II 1.4	F6A, F6C	10/86 ⇨ 02/89
FIESTA IV 1.3 i	JBC	08/95 ⇨ 01/02
MONDEO I 1.6 i 16V	L1F, L1J	02/93 ⇨ 08/96
MONDEO I 1.8 i 16V	RKA, RKB	02/93 ⇨ 08/96
MONDEO I 1.8 i 16V 4x4	RKA	02/93 ⇨ 08/96
MONDEO I 2.0 i 16V	NGA	02/93 ⇨ 08/96
MONDEO I 2.0 i 16V 4x4	NGA	04/93 ⇨ 08/96
ESCORT III 1.3	JBA	07/88 ⇨ 07/90
ESCORT III 1.4 i	F6B, F6D, FUC	02/86 ⇨ 07/90
ORION I 1.4	FUA	12/85 ⇨ 07/90
ORION II 1.3	J4B, J6A	07/90 ⇨ 12/93
ORION II 1.4	F6F, F6G, FUH	07/90 ⇨ 12/93
ORION II 1.6	LUJ, LUK	07/90 ⇨ 12/92
ORION II 1.6 i	LJF	07/90 ⇨ 09/92
ORION II 1.6 i 16V	L1E, L1K	07/92 ⇨ 12/93
ORION II 1.8 i 16V	99BFR1740, RDA	01/92 ⇨ 12/93
SIERRA II 1.6 i	L6B	10/89 ⇨ 02/93
SIERRA II 1.8	R2C, R6A	05/88 ⇨ 02/93
MAZDA		
121 III 1.25	DHF, DHG	03/96 ⇨ 04/03
626 VI 2.0	FS	05/97 ⇨ 10/02

FACET 9.6213 — 07

COILS

Adatt./Suitable:

ALFA ROMEO
60562701
60810690

BOSCH
0 221 504 456

FIAT
60562701
60810690

IVECO
8024220

LANCIA
60562701
60810690

[00] **Eliminated on 09-04-2019. Please verify the availability through our local distributors**
- Eliminato il 09-04-2019. Verificare la disponibilità presso i nostri distributori
- Eliminé le 09-04-2019. Verifier la disponibilité auprès de nos distributeurs sur place
- Am 09-04-2019 gestrichen. Evtl. Verfügbarkeit bitte bei unseren Händlern prüfen
- Eliminado en fecha 09-04-2019. Verificar la disponibilidad a través de nuestros distribuidores locales

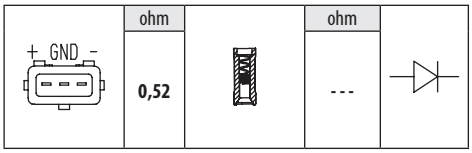

ALFA ROMEO		
147 3.2 GTA	932A.000	02/03 ⇨ 03/10
156 2.5 V6 24V	AR32401, AR32405	02/97 ⇨ 05/06
156 2.5 V6 24V [BRA]	AR32402	10/97 ⇨ 12/01
156 3.2 GTA	932A.000	03/02 ⇨ 05/06
164 3.0	AR64304	04/93 ⇨ 02/95
164 3.0 24V	AR66301, AR66302	09/92 ⇨ 09/98
164 3.0 24V Q4	AR64307, AR64308, AR66304	09/92 ⇨ 10/98
164 3.0 24V QV	AR64304	09/92 ⇨ 09/98
164 3.0 24V QV [USA]	AR64308	04/93 ⇨ 02/95
164 3.0 24V QV Trazione integrale	AR64307	11/92 ⇨ 10/97
164 3.0i 24V Super [BRA]	64306	09/92 ⇨ 10/98
164 3.0i 24V Super Q4	AR66304	03/95 ⇨ 12/98
166 2.5 V6 24V	AR34201, AR36201	10/00 ⇨ 06/07
166 3.0 V6 24V	AR34301, AR36101	10/00 ⇨ 06/07
166 3.0 V6 24V [BRA]	AR34302	08/98 ⇨ 09/00
166 3.2 V6 24V	936A.000	10/03 ⇨ 06/07
GT 3.2 GTA	936A.000	11/03 ⇨ 09/10
GTV 3.0 V6 24V	AR16102, AR16105	10/00 ⇨ 10/05
GTV 3.2 V6 24V	936A6.000	04/03 ⇨ 10/05
SPIDER II 3.0 V6	AR16105	09/94 ⇨ 04/05
SPIDER II 3.0 V6 24V	AR16102	01/99 ⇨ 10/03
SPIDER II 3.2 V6 24V	936A6.000	04/03 ⇨ 04/05
LANCIA		
KAPPA 3.0 24V	838B.000	10/94 ⇨ 10/01
THESIS 3.0 V6	841A.000	07/02 ⇨ 07/09
THESIS 3.2 V6	841L.000	05/03 ⇨ 07/09

FACET 9.6214 — 07,5

COILS

Adatt./Suitable:

BOSCH
0 221 504 006

FIAT
46403328

HITACHI
133865
2503865

LANCIA
46403328

MAGNETI MARELLI
060810245010

[03] **Supplied until depletion**
- Fornibile fino ad esaurimento delle scorte
- Fourni jusqu'à épuisement du stock
- Lieferbar solange vorrat reicht
- Suministrado hasta el stock termina

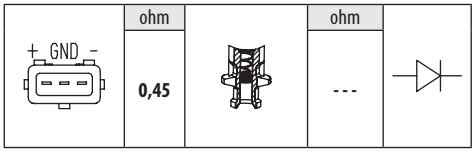

FIAT		
BRAVO I 2.0 HGT 20V	182A1.000	10/95 ⇨ 07/98
COUPE 2.0 20V	182A1.000	08/96 ⇨ 09/98
COUPE 2.0 20V Turbo	175A3.000	08/96 ⇨ 08/00
MAREA 2.0 150 20V	182A1.000	09/96 ⇨ 04/99
MAREA 2.0i 20v [BRA]	182A1.011	10/96 ⇨ 04/99
FIAT (BR)		
MAREA 2.0i 20v	2.0Mpi	01/99 ⇨ 12/00
LANCIA		
KAPPA 2.0 20V	838A1.000, 838A6.000	10/94 ⇨ 10/01
KAPPA 2.0 20V Turbo	175A3.000	06/98 ⇨ 10/01
KAPPA 2.4 20V	838A2.000, 838A2.027	08/94 ⇨ 10/01

FACET 9.6216 — 05

COILS

Adatt./Suitable:

BOSCH
0 221 506 002
0 221 506 003
0 221 506 444
0 221 506 445

DAEWOO
0001587003
0001587503

MERCEDES-BENZ
A 000 150 02 80
A 000 158 70 03
A 000 158 71 03
A 000 158 75 03

PUCH
000 158 71 03
A 000 150 02 80

SSANGYONG
0001587003
0001587103
0001587503
1621580103

VW
00A 905 105

[00] **Eliminated on 27-01-2021. Please verify the availability through our local distributors**
- Eliminato il 27-01-2021. Verificare la disponibilità presso i nostri distributori
- Eliminé le 27-01-2021. Verifier la disponibilité auprès de nos distributeurs sur place
- Am 27-01-2021 gestrichen. Evtl. Verfügbarkeit bitte bei unseren Händlern prüfen
- Eliminado en fecha 27-01-2021. Verificar la disponibilidad a través de nuestros distribuidores locales

[255] **without spark plug connector**
- senza cappuccio candela d'accensione
- sans cosse de bougie d'allumage
- ohne Zündkerzenstecker
- sin conector de bujía de encendido

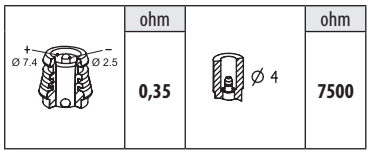

DAEWOO		
KORANDO 2.0	E20	12/98 ⇨ 02/01
KORANDO 2.0 16V	E20, M161.950	02/99 ⇨
KORANDO 2.3	E23, M161.970	01/99 ⇨
KORANDO 3.2 4x4	E32, M104.995	01/99 ⇨
MUSSO 2.3	M111.970	01/99 ⇨
MUSSO 3.2 4x4	M104.992, M162E32	01/99 ⇨
REXTON 3.2 V6	M162.992	04/02 ⇨
MERCEDES-BENZ		
100 LI 2.3	M161.971	11/96 ⇨
CLASSE E I E 280	M104.942	06/93 ⇨ 06/95
CLASSE E I E 280 T	M104.942	06/93 ⇨ 06/96
CLASSE E I E 320	M104.992	06/93 ⇨ 03/98
CLASSE E I E 320 T	M104.992	06/93 ⇨ 06/96
CLASSE E I E 36 AMG	M104.992(AMG3.6)	06/93 ⇨ 03/98
CLASSE E I E 36 T AMG	M104.992(AMG3.6)	05/94 ⇨ 06/96
124 320 CE	M104.992	10/92 ⇨ 05/93
CLASSE C I C 180	M111.921	03/93 ⇨ 05/00
CLASSE C I C 180 T	M111.921	06/96 ⇨ 09/00
CLASSE C I C 200	M111.945	01/94 ⇨ 05/00
CLASSE C I C 200 Kompressor	M111.944	10/95 ⇨ 05/00
CLASSE C I C 200 T	M111.945	06/96 ⇨ 03/01
CLASSE C I C 200 T Kompressor	M111.944	11/96 ⇨ 03/01
CLASSE C I C 230	M111.974	06/96 ⇨ 06/97
CLASSE C I C 230 Kompressor	M111.975	10/95 ⇨ 05/00
CLASSE C I C 230 T	M111.974	06/96 ⇨ 06/98
CLASSE C I C 230 T Kompressor	M111.975	06/97 ⇨ 09/00
CLASSE C I C 280	M104.941	05/93 ⇨ 05/00
CLASSE C I C 36 AMG	M104.941(AMG3.6)	05/94 ⇨ 05/00
SPRINTER I 214	M111.979, M111.984	02/95 ⇨ 05/06
SPRINTER I 214 NGT	M111.984, M111979NGT, M111984NGT	02/95 ⇨ 05/06
SPRINTER I 314	M111.979, M111.984	02/95 ⇨ 05/06
SPRINTER I 314 4x4	M111.984	08/02 ⇨ 05/06
SPRINTER I 314 NGT	M111.984, M111979NGT, M111984NGT	02/95 ⇨ 05/06
SPRINTER I 414	M111.979, M111.984	02/95 ⇨ 05/06
SPRINTER I 414 4x4	M111.979, M111.984	05/97 ⇨ 05/06
SPRINTER I 414 NGT	M111.979, M111.984, M111979NGT, M111984NGT	02/95 ⇨ 05/06
CLASSE CLK I 200	M111.945	06/97 ⇨ 06/02
CLASSE CLK I 200 Kompressor	M111.944	06/97 ⇨ 06/00
CLASSE CLK I 230 Kompressor	M111.975	06/97 ⇨ 06/00
CLASSE E II E 200	M111.942	06/95 ⇨ 08/00
CLASSE E II E 200 Kompressor	M111.947	06/97 ⇨ 03/02
CLASSE E II E 200 T	M111.942	06/96 ⇨ 08/00
CLASSE E II E 200 T Kompressor	M111.947	06/97 ⇨ 03/03
CLASSE E II E 230	M111.970	06/95 ⇨ 06/97
CLASSE E II E 230 T	M111.970	06/96 ⇨ 06/97
CLASSE E II E 280	M104.945	01/96 ⇨ 06/97
CLASSE E II E 320	M104.995	06/95 ⇨ 06/97
CLASSE E II E 36 AMG	M104995AMG	04/96 ⇨ 01/98
CLASSE G II 320 GE	M104.996	09/94 ⇨ 11/97
CLASSE G II G 320	M104.996	09/94 ⇨ 12/97
CLASSE G II G 36 AMG	M104.996(AMG3.6)	01/95 ⇨ 07/98
CLASSE V V 200	M111.948, M111.950	02/97 ⇨ 07/03
CLASSE V V 230	M111.978, M111.980	10/96 ⇨ 07/03
CLASSE M I ML 230	M111.977	02/98 ⇨ 06/05
CLASSE S III 300 SE 2.8	M104.944	01/93 ⇨ 10/98
CLASSE S III 300 SE, SEL/S320	M104.994	03/91 ⇨ 10/98
CLASSE S III S 280	M104.944	02/93 ⇨ 10/98
CLASSE SL IV 280	M104.943	08/93 ⇨ 10/01
CLASSE SL IV 320	M104.991	09/93 ⇨ 10/01
CLASSE SLK I 200	M111.946	09/96 ⇨ 03/00
CLASSE SLK I 200 Kompressor	M111.943	10/96 ⇨ 03/00
CLASSE SLK I 230 Kompressor	M111.973	09/96 ⇨ 03/00
KOMBI II 280 TE	M104.942	10/92 ⇨ 06/93
KOMBI II 320 TE	M104.992	10/92 ⇨ 06/93
TRE VOLUMI II 280 E	M104.942	10/92 ⇨ 06/93
TRE VOLUMI II 320 E	M104.992	10/92 ⇨ 06/93
VITO I 113 2.0	M111.948, M111.950	02/96 ⇨ 07/03
VITO I 114 2.3	M111.978	12/96 ⇨ 07/03
PUCH		
G-MODELL G 320	M104.996	02/94 ⇨ 12/97
G-MODELL G 36 AMG	M104.952(AMG3, 6)	01/95 ⇨ 04/98
SSANGYONG		
CHAIRMAN 3.2	G32D	07/11 ⇨
KORANDO 2.0	E20, E20M160, E20M161, M111E20	05/97 ⇨ 10/02
KORANDO 2.3	--, E23, M111.970, M111E23, M111E23-143	05/97 ⇨ 11/06
KORANDO 3.2	E32, M104.992, M104.995	12/96 ⇨ 11/06
KYRON 3.2 M320 4x4	G32D	03/08 ⇨
MUSSO 2.0	E20, M111E20	10/96 ⇨ 05/05
MUSSO 3.2	M104.992	06/96 ⇨ 09/04
REXTON I 3.2 RX320 4x4	G32D	04/02 ⇨
RODIUS 3.2	M162E32	05/05 ⇨
RODIUS 3.2 4WD	G32D	07/07 ⇨
VW		
LT II 2.3	AGL	05/96 ⇨ 07/06

FACET 9.6216K — 05

COILS

Adatt./Suitable:

[00] **Eliminated on 16-09-2019. Please verify the availability through our local distributors**
- Eliminato il 16-09-2019. Verificare la disponibilità presso i nostri distributori
- Eliminé le 16-09-2019. Verifier la disponibilité auprès de nos distributeurs sur place
- Am 16-09-2019 gestrichen. Evtl. Verfügbarkeit bitte bei unseren Händlern prüfen
- Eliminado en fecha 16-09-2019. Verificar la disponibilidad a través de nuestros distribuidores locales

[250] **incl. spark plug connector**
- con cappuccio candela accensione
- Cosse de bougie d'allumage comprise
- inkl. Zündkerzenstecker
- incl. conector bujías

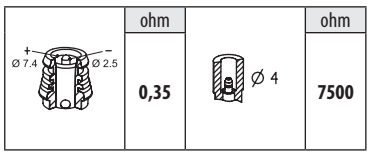

MERCEDES-BENZ		
100 LI 2.3	M161.971	11/96 ⇨
CLASSE E I E 280	M104.942	06/93 ⇨ 06/95
CLASSE E I E 280 T	M104.942	06/93 ⇨ 06/96
CLASSE E I E 320	M104.992	06/93 ⇨ 03/98
CLASSE E I E 320 T	M104.992	06/93 ⇨ 06/96
CLASSE E I E 36 AMG	M104.992(AMG3.6)	06/93 ⇨ 03/98
CLASSE E I E 36 T AMG	M104.992(AMG3.6)	05/94 ⇨ 06/96
124 320 CE	M104.992	10/92 ⇨ 05/93
CLASSE C I C 180	M111.921	03/93 ⇨ 05/00
CLASSE C I C 180 T	M111.921	06/96 ⇨ 09/00
CLASSE C I C 200	M111.945	01/94 ⇨ 05/00
CLASSE C I C 200 Kompressor	M111.944	10/95 ⇨ 05/00
CLASSE C I C 200 T	M111.945	06/96 ⇨ 03/01
CLASSE C I C 200 T Kompressor	M111.944	11/96 ⇨ 03/01
CLASSE C I C 230	M111.974	06/96 ⇨ 06/97
CLASSE C I C 230 Kompressor	M111.975	10/95 ⇨ 05/00
CLASSE C I C 230 T	M111.974	06/96 ⇨ 06/98
CLASSE C I C 230 T Kompressor	M111.975	06/97 ⇨ 09/00
CLASSE C I C 280	M104.941	05/93 ⇨ 05/00
CLASSE C I C 36 AMG	M104.941(AMG3.6)	05/94 ⇨ 05/00
SPRINTER I 214 NGT	M111.984	02/95 ⇨ 05/06
SPRINTER I 314 NGT	M111.984	02/95 ⇨ 05/06
SPRINTER I 414	M111.979	02/96 ⇨ 05/06
SPRINTER I 414 4x4	M111.979	05/97 ⇨ 05/06
CLASSE G II 320 GE	M104.996	09/94 ⇨ 11/97
CLASSE G II G 320	M104.996	09/94 ⇨ 12/97
CLASSE G II G 36 AMG	M104.996(AMG3.6)	01/95 ⇨ 07/98
CLASSE S III 300 SE 2.8	M104.944	01/93 ⇨ 10/98
CLASSE S III 300 SE, SEL/S320	M104.994	03/91 ⇨ 10/98
CLASSE S III S 280	M104.944	02/93 ⇨ 10/98
CLASSE SL IV 280	M104.943	08/93 ⇨ 10/01
CLASSE SL IV 320	M104.991	09/93 ⇨ 10/01
KOMBI II 280 TE	M104.942	10/92 ⇨ 06/93
KOMBI II 320 TE	M104.992	10/92 ⇨ 06/93
TRE VOLUMI II 280 E	M104.942	10/92 ⇨ 06/93
TRE VOLUMI II 320 E	M104.992	10/92 ⇨ 06/93
PUCH		
G-MODELL G 320	M104.996	02/94 ⇨ 12/97
G-MODELL G 36 AMG	M104.952(AMG3, 6)	01/95 ⇨ 04/98

FACET 9.6217 — 07

COILS

Adatt./Suitable:

BOSCH
0 221 505 437
0 221 505 438
HITACHI
138711
2508711
MAGNETI MARELLI
060717098012
MERCEDES-BENZ
A 000 150 04 80
A 000 150 05 80
A 000 158 68 03

[00] **Eliminated on 26-04-2021. Please verify the availability through our local distributors**
- Eliminato il 26-04-2021. Verificare la disponibilità presso i nostri distributori
- Eliminé le 26-04-2021. Verifier la disponibilité auprès de nos distributeurs sur place
- Am 26-04-2021 gestrichen. Evtl. Verfügbarkeit bitte bei unseren Händlern prüfen
- Eliminado en fecha 26-04-2021. Verificar la disponibilidad a través de nuestros distribuidores locales

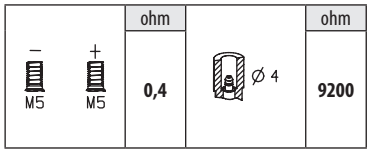

MERCEDES-BENZ		
CLASSE E I E 200	M111.940	06/93 ⇨ 03/98
CLASSE E I E 200 T	M111.940	06/93 ⇨ 06/96
CLASSE E I E 220	M111.960	06/93 ⇨ 03/98
CLASSE E I E 220 T	M111.960	06/93 ⇨ 06/96
124 220 CE	M111.960	10/92 ⇨ 05/93
CLASSE C I C 180	M111.920	03/93 ⇨ 05/00
CLASSE C I C 180 T	M111.920	06/96 ⇨ 09/00
CLASSE C I C 200	M111.941	01/94 ⇨ 05/00
CLASSE C I C 200 T	M111.941	06/96 ⇨ 03/01
CLASSE C I C 220	M111.961	03/93 ⇨ 05/00
KOMBI II 200 TE	M111.940	05/86 ⇨ 06/93
KOMBI II 220 TE	M111.960	10/92 ⇨ 05/93
TRE VOLUMI II 200 E	M111.940	10/92 ⇨ 06/93
TRE VOLUMI II 220 E	M111.960	10/92 ⇨ 06/93

FACET 9.6222 — 05

COILS

Adatt./Suitable:

DENSO
029700-7301
TOYOTA
90919-02200

[03] **Supplied until depletion**
- Fornibile fino ad esaurimento delle scorte
- Fourni jusqu'à épuisement du stock
- Lieferbar solange vorrat reicht
- Suministrado hasta el stock termina

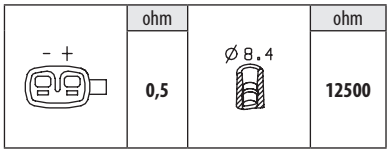

TOYOTA		
PREVIA I 2.4	2TZ-FE	05/90 ⇨ 08/00
PREVIA I 2.4 4WD	2TZ-FE, 2TZ-FZE	01/90 ⇨ 12/99

FACET 9.6241 — 07

COILS

Adatt./Suitable:

BOSCH
F 000 ZS0 112
DELCO REMY
3 474 232
3 474 282
DUCELLIER
2 526 050 A
GENERAL MOTORS
03 474 232
03 474 282
90 449 740
90 510 387
OPEL
12 08 002
12 08 004
12 08 048

[03] **Supplied until depletion**
- Fornibile fino ad esaurimento delle scorte
- Fourni jusqu'à épuisement du stock
- Lieferbar solange vorrat reicht
- Suministrado hasta el stock termina

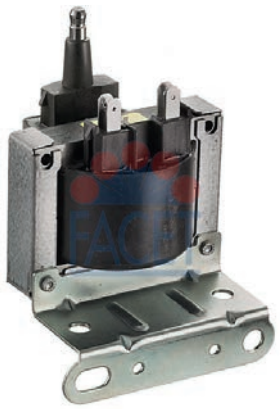

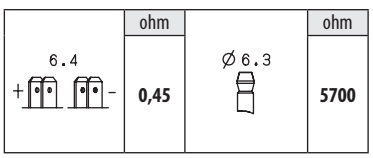

OPEL		
ASTRA F 1.6 i	C16NZ	09/91 ⇨ 09/98
CORSA A 1.2	12S, 12ST	09/82 ⇨ 08/90

OPEL		
CORSA A 1.2 N	12NV	01/90 ⇨ 03/93
CORSA A 1.2 S	12S, 12ST	09/82 ⇨ 03/93
CORSA A 1.3	13NB, 13SB, C13N	09/85 ⇨ 10/89
CORSA A 1.3 GL	13S	09/82 ⇨ 03/93
CORSA A 1.3 i	C13N	09/86 ⇨ 09/90
CORSA A 1.3 S	13SB	09/82 ⇨ 10/89
CORSA A 1.6 GSI	C16NZ	08/88 ⇨ 09/92
KADETT D 1.2	12ST	08/82 ⇨ 08/84
KADETT E 1.3 i Cat	C13N	09/85 ⇨ 08/91
KADETT E 1.3 N	13N, 13NB	09/84 ⇨ 08/91
KADETT E 1.3 S	13S	09/84 ⇨ 02/93
KADETT E 1.6	16SV	09/86 ⇨ 12/91
KADETT E 1.6 i	16SV, C16NZ, E16NZ	09/86 ⇨ 07/94
KADETT E 1.6 i Cat	C16LZ, C16NZ	09/86 ⇨ 02/93
KADETT E 1.6 S	16S, 16SV	09/84 ⇨ 08/91
VECTRA A 1.6 i	C16NZ, E16NZ	09/88 ⇨ 11/95
VECTRA A 1.6 i Cat	C16NZ	09/88 ⇨ 11/95
VAUXHALL		
ASTRA III 1.6 i	C16NZ	09/91 ⇨ 12/98
ASTRAVAN I 1.6 i	C16NZ	10/91 ⇨ 08/98

FACET 9.6245 — 07,5

COILS

Adatt./Suitable:

BOSCH
0 986 221 003
CHAMPION
BAE 920 A
BAE 920 AX
FIAT
46446039
46472440
46480361
500309816
7789346
HITACHI
138739
2508739
IVECO
500309816
LANCIA
46446039
46472440
46480361
7789346
MAGNETI MARELLI
060717067012
060792001010
BAE 920 A
BAE 920 AX

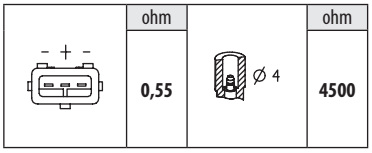

FIAT		
BRAVA 1.6 16V	182A4.000, 182A4.027, 182A6.000, 182B6.000	10/95 ⇨ 12/02
BRAVO I 1.6	182B6.000	09/00 ⇨ 10/01
BRAVO I 1.6 16V	178A8.011, 182A4.000, 182A6.000	10/95 ⇨ 10/01
DOBLO I 1.6 Natural Power	182B6.000, 182B6000CNG	09/02 ⇨
MAREA 1.6	182B6.000, 185A3.000	09/00 ⇨ 08/02
MAREA 1.6 100 16V	182A4.000	09/96 ⇨ 05/02
MAREA 1.6 100 16V Bipower	182A4.000, 185A3.000	04/99 ⇨ 05/02
MAREA 1.6 16V	185A3.000	04/97 ⇨ 02/99
MAREA 1.6 SX	182B5.098	09/00 ⇨ 08/02
MULTIPLA 1.6	182B6.000	09/00 ⇨ 06/10
MULTIPLA 1.6 100 16V	182A4.000	04/99 ⇨ 06/10
MULTIPLA 1.6 16V	182B6.000	04/02 ⇨ 06/10
MULTIPLA 1.6 16V Bipower	182B6.000, 186A4.000	10/01 ⇨ 06/10
MULTIPLA 1.6 16V Blupower	186A3.000, 186A3000CNG	04/99 ⇨ 06/10
MULTIPLA 1.6 16V GPL	182B6.000	10/01 ⇨ 06/10
MULTIPLA 1.6 Natural Power	182B6000CNG	11/08 ⇨ 06/10
MULTIPLA VAN 1.6	182B6.000	09/00 ⇨ 06/10

FIAT		
MULTIPLA VAN Bipower	182B6.000	10/01 ⇨ 06/10
PALIO 1.6	178C7.098, 178D2.011	07/97 ⇨
PALIO 1.6 16V	178B3.000, 178C7.098, 178D2.011, 182B6.000	02/01 ⇨
PALIO 1.6 16V Sport	178E7.000	10/01 ⇨
SIENA 1.6	182B6.000	11/00 ⇨ 12/12
SIENA 1.6 16V	178B3.000	09/98 ⇨
STRADA 1.6 MPI	178D2.011	07/05 ⇨
FIAT (BR)		
BRAVA 1.6i 16v	1.6Mpi	01/00 ⇨
PALIO 1.6i	1.6Mpi	01/99 ⇨ 12/00
PALIO 1.6i 16v	1.6Mpi16v	01/96 ⇨
SIENA 1.6i 16v	1.6Mpi	01/98 ⇨ 12/99
STRADA 1.6i 16v	1.6Mpi	01/99 ⇨
IVECO		
DAILY II 2.8 CNG	8149.03	05/99 ⇨ 07/07
DAILY II 50 C 11 Natural Power	8149.03	05/99 ⇨ 04/06
DAILY III 50 C 11 Natural Power	8149.03	05/02 ⇨ 05/06
DAILY 2.8 CNG	8149.03	07/99 ⇨ 12/06
LANCIA		
DEDRA 1.6 16V	182A4.000	01/96 ⇨ 07/99
DELTA II 1.6 i.e.	182A6.000	03/96 ⇨ 08/99
DELTA II 1.6 i.e. 16V	182A4.000	01/96 ⇨ 08/99
LYBRA 1.6	182B6.000	10/00 ⇨ 10/05
LYBRA 1.6 16V	182A4.000	07/99 ⇨ 10/05

FACET **9.6247** 05

COILS

Adatt./Suitable:

HITACHI
138810
2508810
CM1T-228
CM1T-228 A
CM1T-228 B
CM1T-228 C

HONDA
30500-P0A-A01
30500-P0H-A01
30500-PAA-A01
30500-PCA-003
30500-PDA-E01

ISUZU
5-86206161-0
5-86207198-0

MAGNETI MARELLI
060717021012

ROVER
GCL207
NEC100750

[03] **Supplied until depletion**
- Fornibile fino ad esaurimento delle scorte
- Fourni jusqu'à épuisement du stock
- Lieferbar solange vorrat reicht
- Suministrado hasta el stock termina

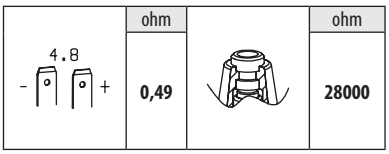

HONDA		
ACCORD V 1.9 i	F18A3	02/96 ⇨ 10/98
ACCORD V 2.0 i LS	F20Z1	02/96 ⇨ 10/98
ACCORD V 2.2	F22B1, F22Z2	10/93 ⇨ 12/97
ACCORD V 2.2 16V	F22Z1	01/96 ⇨ 09/98
ACCORD V 2.2 i VTEC	F22Z2	02/96 ⇨ 10/98
ACCORD VI 1.8 16V Vtec	3B630WM, F18B3	04/99 ⇨
ACCORD VI 1.8 i	F18B2, F18B4	10/98 ⇨ 12/02
ACCORD VI 1.8 i 16V Vtec	F18B4	11/98 ⇨ 12/99
ACCORD VI 2.0	F20B6	11/99 ⇨ 12/02
ACCORD VI 2.0 16V Vtec	F20B6	04/99 ⇨
ACCORD VI 2.0 i	F20B6	10/98 ⇨ 01/01
ACCORD VI 2.0 i 16V	F20B5, F20B7	02/98 ⇨ 06/03
ACCORD VI 2.3	F23Z5	11/00 ⇨ 06/03
ACCORD VI 2.3 i 16V Vtec	F23Z5	11/00 ⇨
ACCORD VI 2.3 VTi	F23A3	02/98 ⇨ 10/02
CIVIC VI 1.4 16V	D14A7, D14Z3	04/98 ⇨ 02/01
CIVIC VI 1.4 i	D14A3, D14A5, D14A7, D14Z1, D14Z3, D14Z4	06/95 ⇨ 02/01
CIVIC VI 1.4 i S	D14Z4	11/95 ⇨ 02/01
CIVIC VI 1.4 LPG	D14A4, D14Z4	01/97 ⇨ 02/01
CIVIC VI 1.4i 16V	D14Z3, D14Z4	11/98 ⇨ 12/00
CIVIC VI 1.4i 16V Vtec	D14Z4	01/99 ⇨
CIVIC VI 1.5 16V	D15Z8	01/97 ⇨ 02/01
CIVIC VI 1.5 i	D15Z8	11/95 ⇨ 02/01
CIVIC VI 1.6	D16W4, D16Y2	10/95 ⇨ 03/01
CIVIC VI 1.6 16V	D16B2, D16W3, D16W4	01/97 ⇨ 02/01
CIVIC VI 1.6 i	D16Y5	11/95 ⇨ 02/01
CIVIC VI 1.6 i Vtec	D16Y6	11/95 ⇨ 02/01
CIVIC VI 1.6i 16V	D16W3	11/98 ⇨ 12/00
CIVIC VI 1.8 16V	B18C4	01/97 ⇨ 02/01
CIVIC V 1.6 i Vtec	D16Y6	01/94 ⇨ 03/96
ODYSSEY 2.2	F22B6	01/95 ⇨ 12/97
ODYSSEY 2.3	F23A	10/97 ⇨ 09/03
ODYSSEY 2.3 4x4	F23A	10/97 ⇨ 09/03
ODYSSEY 2.3 i 16V Vtec	F23A8	01/98 ⇨
SHUTTLE 2.3 16V	F23A7, F23A8	10/97 ⇨ 06/04
ROVER		
400 II 416 Si	16K4F, D16Y2, D16Y3, D16B2	03/95 ⇨ 03/00
600 618 i/Si	F18A3	03/96 ⇨ 02/99
600 620 i	F20Z2	08/93 ⇨ 06/96
600 620 Si	F20Z1	08/93 ⇨ 02/99

FACET **9.6252** 05

COILS

Adatt./Suitable:

BMW
1 703 227
1 748 017
1 748 018
12 13 1 703 228
12 13 1 703 825
12 13 1 748 017
12 13 1 748 018
12 13 7 599 219
12 13 9 067 830
7 599 219

BOSCH
0 221 504 004
0 221 504 029
1 227 030 081

LAND ROVER
1748018
LR022494
NEC000040
NEC101000L

[00] **Eliminated on 23-03-2021. Please verify the availability through our local distributors**
- Eliminato il 23-03-2021. Verificare la disponibilità presso i nostri distributori
- Eliminé le 23-03-2021. Verifier la disponibilité auprès de nos distributeurs sur place
- Am 23-03-2021 gestrichen. Evtl. Verfügbarkeit bitte bei unseren Händlern prüfen
- Eliminado en fecha 23-03-2021. Verificar la disponibilidad a través de nuestros distribuidores locales

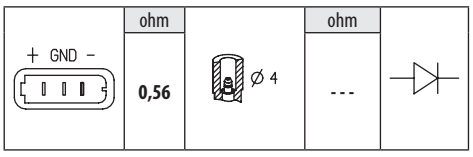

BMW		
3 III 320 i	M50B20(206S1), M50B20(206S2), M52B20(206S3)	01/91 ⇨ 11/99
3 III 323 i	M52B25(256S3)	05/95 ⇨ 11/99
3 III 323 ti	M52B25(256S3)	09/97 ⇨ 08/00
3 III 328 i	M52B28(286S1)	01/95 ⇨ 11/99
3 III M3 3.2	S50B32(326S1)	10/95 ⇨ 09/99
3 IV 320 Ci	M52B20(206S4), M52B206S4, M54B22(226S1), M54B226S1	01/00 ⇨ 12/07
3 IV 320 i	4F8Q636, M52B20(206S4), M52B206S4, M54B22(226S1), M54B226S1	09/00 ⇨ 02/05
3 IV 323 Ci	0LF8, 8CLS, M52B25(256S4), M52B256S4	04/99 ⇨ 09/00
3 IV 323 i	-(246S3), M52B25(256S4), M52B256S4	03/98 ⇨ 12/03
3 IV 325 Ci	4CSS, M54B25(256S5), M54B256S5, M5625656	09/00 ⇨
3 IV 325 i	-(246S4), M54B25(256S5), M54B256S5, M5625656	09/00 ⇨
3 IV 325 ti	M54B25(256S5), M54B256S5	04/01 ⇨ 12/04
3 IV 325 xi	M54B25(256S5), M54B256S5	09/00 ⇨ 02/05
3 IV 328 Ci	M52B28(286S2), M52B286S2	12/98 ⇨ 05/00
3 IV 328 i	1LGX, M52B28(286S2), M52B286S2	02/98 ⇨ 06/00
3 IV 330 Ci	7ACR, M54B30(306S3), M54B306S3	06/00 ⇨ 08/06
3 IV 330 i	M54B30(306S3), M54B306S3	06/00 ⇨ 04/05
3 IV 330 xi	M54B30(306S3), M54B306S3	06/00 ⇨ 07/06
5 IV 520 i	6BJT, 8TJ376QE, M52B206S3, M52B206S4, M54B22(226S1), M54B226S1	09/00 ⇨ 12/03
5 IV 523 i	1LD5, 4M18A, 6GW491Q-E, 8K7M818, M52B25(256S3), M52B256S3	09/95 ⇨ 08/00
5 IV 525 i	8CUG, M54B25(256S5), M54B256S5	09/00 ⇨ 05/04
5 IV 528 i	9D0836LE501, M52B28(286S1), M52B28(286S2), M52B286S1, M52B286S2	09/95 ⇨ 08/00
5 IV 530 i	2CBL, M54B30(306S3), M54B306S3	09/00 ⇨ 12/03
5 IV 535 i	1H4B410, 6DAM15B, M62B35(358S2)	06/96 ⇨ 08/98
5 IV 540 i	0JL465QH, 54A91S, 9K20C3, M62B44(448S1), M62B44(448S2), M62B448S2	03/96 ⇨ 12/03
5 IV M5	8D0836LF40, S62B50(508S1)	10/98 ⇨ 06/03
7 III 728 i, iL	M52B28(286S1), M52B28(286S2)	08/95 ⇨ 11/01
7 III 728i X	M52B28(286S1)	11/95 ⇨ 09/01
7 III 735 i, iL	M62B35(358S1)	03/96 ⇨ 08/98
7 III 740 i, iL	M62B44(448S1), M62B44(448S2)	02/96 ⇨ 07/01
8 840 Ci	M62B44(448S1)	03/96 ⇨ 06/99
Z3 2.0 i	M52B20(206S4)	04/99 ⇨ 01/03
Z3 2.2 i	M54B22(226S1)	08/00 ⇨ 01/03
Z3 2.8 i	M52B28(286S1), M52B28(286S2)	01/96 ⇨ 07/00
Z3 3.0 i	M54B30(306S3)	06/00 ⇨ 06/03
Z3 M	S50B32(326S1)	02/98 ⇨ 06/01
Z3 M 3.2	S50B32(326S1)	01/97 ⇨ 06/00
Z8 4.9	S62B50(508S1)	01/00 ⇨ 12/03
X5 I 3.0 i	M54B30(306S3)	04/00 ⇨ 12/06
X5 I 4.4 i	M62B44(448S2), M62B448S2	01/00 ⇨ 09/03
X5 I 4.6 is	M62B46(468S1), M62B468S1	10/01 ⇨ 09/03
LAND ROVER		
DEFENDER 2.8 90, 110	--	09/00 ⇨
FREELANDER 2.5 V6 4x4	25KV6	11/00 ⇨ 10/06
RANGE ROVER III 4.4 4x4	448PN, 44SDEX, M62B44	03/02 ⇨ 08/12

COILS

FACET 9.6254 — 07

COILS

Adatt./Suitable:

[03] **Supplied until depletion**
- Fornibile fino ad esaurimento delle scorte
- Fourni jusqu'à épuisement du stock
- Lieferbar solange vorrat reicht
- Suministrado hasta el stock termina

[250] **incl. spark plug connector**
- con cappuccio candela accensione
- Cosse de bougie d'allumage comprise
- inkl. Zündkerzenstecker
- incl. conector bujías

[302] **Paired article numbers**
- N° articolo appaiato
- Numéro d'article en paire
- paarige Artikelnummer
- Referencia artículo par

9.6254S

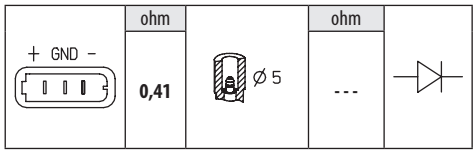

VOLKSWAGEN (BR)		
GOLF A4 1.8i Turbo 20v	AGU	10/99 ⇨
VW		
PASSAT IV 1.8 T Syncro	AEB	11/96 ⇨ 08/00

FACET 9.6254S — 05

COILS

Adatt./Suitable:

AUDI
058 905 101
058 905 105
BOSCH
0 986 221 011
0 986 22A 203
HITACHI
133805
2503805
SEAT
058 905 105
SKODA
058 905 101
058 905 105
VW
058 905 101
058 905 105

[03] **Supplied until depletion**
- Fornibile fino ad esaurimento delle scorte
- Fourni jusqu'à épuisement du stock
- Lieferbar solange vorrat reicht
- Suministrado hasta el stock termina

[255] **without spark plug connector**
- senza cappuccio candela d'accensione
- sans cosse de bougie d'allumage
- ohne Zündkerzenstecker
- sin conector de bujía de encendido

[301] **Paired article numbers**
- N° articolo appaiato
- Numéro d'article en paire
- paarige Artikelnummer
- Referencia artículo par

9.6254 9.6322

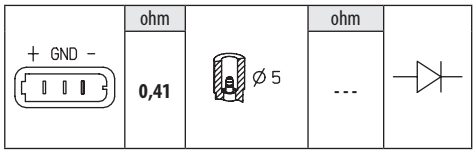

AUDI		
A3 I 1.8 T	AGU	12/96 ⇨ 05/03
A3 I 1.8 T quattro	AGU	12/96 ⇨ 05/03
A6 I S6 Plus quattro	AHK	04/96 ⇨ 12/97
A4 I 1.8 T	AEB, AJL, ANB, APU, ARK	01/95 ⇨ 09/01
A4 I 1.8 T quattro	AEB, AJL, ANB, APU, ARK, AWT	01/95 ⇨ 09/01
A4 I RS4 quattro	ASJ, AZR	05/00 ⇨ 09/01
A4 I S4 quattro	AGB, AZB	09/97 ⇨ 09/01
A6 II 1.8 T	AEB, AJL, ANB, APU, ARK	01/97 ⇨ 01/05
A6 II 1.8 T quattro	AEB, AJL, ANB, APU, ARK	02/97 ⇨ 01/05
A6 II 2.7 T	AJK	02/99 ⇨ 01/05
A6 II 2.7 T quattro	AJK, ARE, AZA	08/01 ⇨ 01/05
A8 I 3.7	AKJ	06/97 ⇨ 12/98
A8 I 4.2 quattro	ABZ, AEM, AGH, AKG, AQF, AUW	03/94 ⇨ 11/98
A8 I S8 quattro	AHC, AKH	07/96 ⇨ 06/99
ALLROAD 2.7 T quattro	1457L77, ARE	05/00 ⇨ 08/05
SEAT		
ALHAMBRA I / II 1.8 T 20V	AJH	10/97 ⇨ 03/10
SKODA		
OCTAVIA I 1.8 T	AGU	08/97 ⇨ 12/10
VOLKSWAGEN (BR)		
GOLF A4 1.8i Turbo 20v	AGU	10/99 ⇨
VW		
PASSAT IV 1.8 T	AEB, ANB, APU	10/96 ⇨ 11/00
PASSAT IV 1.8 T Syncro	AEB	11/96 ⇨ 08/00
BORA 1.8 T	AGU	05/00 ⇨ 05/05
GOLF IV 1.8 T	AGU	08/97 ⇨ 06/06
SHARAN I 1.8 T 20V	AJH	09/97 ⇨ 03/10

FACET 9.6255 — 05

COILS

Adatt./Suitable:

BOSCH
0 986 221 030
DUCELLIER
2 526 051 A
2 526 110 A
HITACHI
138757
2508757
MAGNETI MARELLI
060717073012
RENAULT
77 00 863 020
77 01 041 607
SAGEM
2 526 051 A
2 526 110 A
VOLVO
70863020
708630207

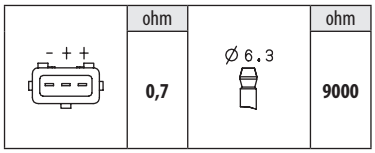

RENAULT		
LAGUNA I 2.0	N7Q700, N7Q704	06/95 ⇨ 02/01
LAGUNA I 2.0 16V	N7Q700, N7Q704	06/95 ⇨ 03/01
MEGANE I 1.6 e	K7M702, K7M703, K7M790	01/96 ⇨ 08/03
MEGANE I 1.6 i	K7M720, K7M790	01/96 ⇨ 03/99
MEGANE I 1.6 LPG	K7M702	08/95 ⇨ 03/99
MEGANE SCÉNIC I 1.6 e	K7M702, K7M703	10/96 ⇨ 10/99
MEGANE SCÉNIC I 1.6 i	K7M720	01/97 ⇨ 09/99
MEGANE 1.6 BiFuel	K7M702	10/96 ⇨ 10/99
SAFRANE II 2.0 16V	N7Q710, N7Q711	07/96 ⇨ 12/00
VOLVO		
S40 I 1.6	B4164S	09/95 ⇨ 08/99
S40 I 1.8	B4184S	07/95 ⇨ 08/99
S40 I 2.0	B4204S, B4204S2	07/95 ⇨ 08/99
V40 I 1.6	B4164S	12/95 ⇨ 08/99
V40 I 1.8	B4184S	07/95 ⇨ 08/99
V40 I 2.0	B4204S	07/95 ⇨ 08/99

FACET 9.6256 — 05

COILS

Adatt./Suitable:

BOSCH
0 986 221 031

DUCELLIER
2 526 052 A
2 526 111 A

HITACHI
138758
2508758

MAGNETI MARELLI
060717071012

RENAULT
77 00 863 021
77 01 041 608

SAGEM
2 526 052 A
2 526 111 A

VOLVO
70863021
708630215

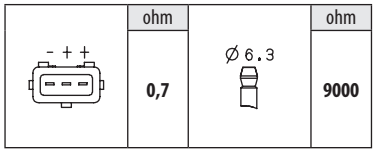

RENAULT		
LAGUNA I 2.0	N7Q700, N7Q704	06/95 ⇨ 02/01
LAGUNA I 2.0 16V	N7Q700, N7Q704	06/95 ⇨ 03/01
MEGANE I 1.6 e	K7M702, K7M703, K7M790	01/96 ⇨ 08/03
MEGANE I 1.6 i	K7M720, K7M790	01/96 ⇨ 03/99
MEGANE I 1.6 LPG	K7M702	08/95 ⇨ 03/99
MEGANE SCÉNIC I 1.6 e	K7M702, K7M703	10/96 ⇨ 10/99
MEGANE SCÉNIC I 1.6 i	K7M720	01/97 ⇨ 09/99
MEGANE 1.6 BiFuel	K7M702	10/96 ⇨ 10/99
SAFRANE II 2.0 16V	N7Q710, N7Q711	07/96 ⇨ 12/00
VOLVO		
S40 I 1.6	B4164S	09/95 ⇨ 08/99
S40 I 1.8	B4184S	07/95 ⇨ 08/99
S40 I 2.0	B4204S, B4204S2	07/95 ⇨ 08/99
V40 I 1.6	B4164S	12/95 ⇨ 08/99
V40 I 1.8	B4184S	07/95 ⇨ 08/99
V40 I 2.0	B4204S	07/95 ⇨ 08/99

FACET 9.6264 — 07

COILS

Adatt./Suitable:

BOSCH
F 000 ZS0 212

FORD
1 008 886
1 008 887
1 018 139
1 018 140
96FB-12257-AB
A96BF-12024-A1B

HITACHI
138803

MAGNETI MARELLI
060717036012

00 Eliminated on 23-02-2022. Please verify the availability through our local distributors
- Eliminato il 23-02-2022. Verificare la disponibilità presso i nostri distributori
- Eliminé le 23-02-2022. Verifier la disponibilité auprès de nos distributeurs sur place
- Am 23-02-2022 gestrichen. Evtl. Verfügbarkeit bitte bei unseren Händlern prüfen
- Eliminado en fecha 23-02-2022. Verificar la disponibilidad a través de nuestros distribuidores locales

300 Paired article numbers
- N° articolo appaiato
- Numéro d'article en paire
- paarige Artikelnummer
- Referencia artículo par

9.6035

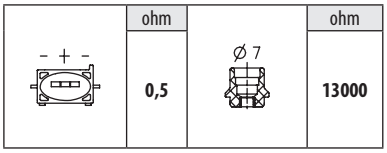

FORD		
FIESTA III 1.0	TLB	03/89 ⇨ 12/95
FIESTA III 1.1	G6A, GUD, GUE	03/89 ⇨ 12/95
FIESTA III 1.3	J6B, JBB, JBC	03/89 ⇨ 02/96
FIESTA III 1.3 Cat	J6B	05/91 ⇨ 01/97
ESCORT V 1.3	J4B, J6A, JBE	07/90 ⇨ 01/95
ESCORT VI 1.3	BL13H-JBE	01/95 ⇨ 02/99
FIESTA IV 1.0 i	0EAL	04/96 ⇨ 09/99
FIESTA IV 1.3 i	JBC	08/95 ⇨ 01/02
ORION II 1.3	BL13H-JBE, J4B, J6A	07/90 ⇨ 12/94

FACET 9.6265 — 07

COILS

Adatt./Suitable:

HITACHI
138765
2508765

MAGNETI MARELLI
060717072012

RENAULT
77 00 872 449
77 00 872 834
82 00 141 149

SAGEM
2 526 078 A
2 526 078 B

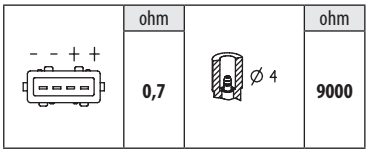

RENAULT		
CLIO I 1.2	D7F730	01/96 ⇨ 09/98
CLIO II 1.2	D7F710, D7F720, D7F722, D7F726	09/98 ⇨
CLIO II 1.2 LPG	D7F722	03/99 ⇨ 05/01
CLIO II 2.0 16V Sport	F4R730, F4R732, F4R736, F4R738	02/00 ⇨ 06/09
KANGOO 1.2 BiFuel	D7F710, D7F722, D7F744, D7F764, D7F766	06/97 ⇨ 06/03
KANGOO I 1.2	D7F710, D7F720, D7F722, D7F726, D7F744, D7F746, D7F764, D7F766	08/97 ⇨
KANGOO I 1.2 BiFuel	D7F710, D7F744	07/98 ⇨ 07/01
LAGUNA II 2.0 16V IDE	F5R700, F5R701	04/01 ⇨ 09/07
MEGANE I 2.0 16V	F4R746	01/02 ⇨ 08/03
MEGANE I 2.0 16V IDE	F4R746, F5R740	11/99 ⇨ 08/03
TWINGO I 1.2	D7F700, D7F701, D7F702, D7F703, D7F704, D7F706	05/96 ⇨

FACET 9.6266S — 05

COILS

Adatt./Suitable:

BOSCH
F 005 X11 775

FORD
4 132 292
B6S7 18100
XM34-4608-CA

FORD USA
4 132 292
XM34-4608-CA

MAZDA
B6S7-18-100
FEJK-18-10X

[00] **Eliminated on 23-02-2022. Please verify the availability through our local distributors**
- Eliminato il 23-02-2022. Verificare la disponibilità presso i nostri distributori
- Eliminé le 23-02-2022. Verifier la disponibilité auprès de nos distributeurs sur place
- Am 23-02-2022 gestrichen. Evtl. Verfügbarkeit bitte bei unseren Händlern prüfen
- Eliminado en fecha 23-02-2022. Verificar la disponibilidad a través de nuestros distribuidores locales

[1193] **Paired article numbers**
- N° articolo appaiato
- Numéro d'article en paire
- paarige Artikelnummer
- Referencia artículo par

9.6133

[245] **without fastening clamp**
- senza staffa fissaggio
- sans bride de fixation
- ohne Befestigungsbügel
- sin estribo de sujeción

+ -	ohm	Ø 8.2	ohm
	1		14500

FORD		
ENDEAVOUR 2.6 EFI	--	08/03 ⇨
EVEREST 2.6 EFI	--	08/03 ⇨
RANGER IV 2.2	F2D6	03/02 ⇨ 09/05
RANGER IV 2.6	--	10/02 ⇨ 09/04
RANGER IV 2.6 EFI	--	10/06 ⇨

MAZDA		
E2000 2.0i 12v	FERW, FEY9	04/97 ⇨
E2000 2.0i 12v 4x4	FEJM, FEY9	09/90 ⇨ 08/99

FACET 9.6274 — 07,5

COILS

Adatt./Suitable:

DUCELLIER
2 526 073 A

LAND ROVER
NEC100630

MAGNETI MARELLI
060717131012

MG
NEC100630

ROVER
GCL201
NEC100630
NEC100630SLP
NEC100631

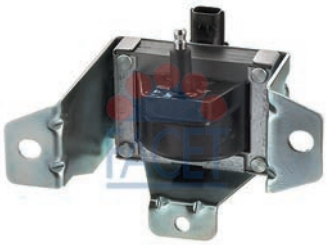

+ -	ohm	Ø 6.3	ohm
	0,75		5600

LAND ROVER		
FREELANDER 1.8 16V 4x4	18K4F	04/98 ⇨ 10/06
FREELANDER 1.8 4x4	18K4F	10/00 ⇨ 10/06
FREELANDER 1.8 i 16V 4x4	18K4F	02/98 ⇨ 10/06

MG		
EXPRESS 1.4	14K4F	03/03 ⇨ 05/05
MG TF 115	16K4F	03/02 ⇨ 12/09
MG TF 135	18K4F	03/02 ⇨ 12/09
MG TF 160	18K4K	03/02 ⇨ 12/09
MG ZR 105	14K4F	06/01 ⇨ 04/05
MG ZR 120	18K4F	06/01 ⇨ 04/05

ROVER		
25 1.1	11K4F, 11K2F	09/99 ⇨ 05/05
25 1.1 16V	11K4F	01/04 ⇨ 05/05
25 1.4	14K4M	01/03 ⇨ 12/05
25 1.4 16V	14K4F, 14K4M	10/99 ⇨ 05/05
25 1.6 16V	16K4F	10/99 ⇨ 05/05
25 1.8 16V	18K4F	10/99 ⇨ 05/05
200 II 214 GSi/Si	14K4C	01/90 ⇨ 10/95
200 II 216 1.6i 16V	16K4F	01/96 ⇨ 11/99
200 III 1.4	14K4D	01/96 ⇨ 12/97
200 III 211	11K2D	01/98 ⇨ 03/00
200 III 214 i	14K2F	11/95 ⇨ 03/00
200 III 214 Si	14K4F	11/95 ⇨ 03/00
200 III 216 Si	16K4F	11/95 ⇨ 06/99
400 II 414	14K2F	03/96 ⇨ 12/99
400 II 414 Si	14K4F	05/95 ⇨ 03/00
400 II 416 Si	16K4F, D16Y2	03/95 ⇨ 03/00
400 I 1.6 i	16K4F, D16A8	05/94 ⇨ 11/98
400 I 414	14K4C	01/93 ⇨ 04/95
STREETWISE 1.4	14K4F, 14K4M	08/03 ⇨ 05/05
STREETWISE 1.6	16K4F	01/04 ⇨ 05/05

FACET 9.6276 — 05

COILS

Adatt./Suitable:

BOSCH
0 986 221 025

HITACHI
138759
2508759

MAGNETI MARELLI
060717068012

RENAULT
77 00 100 589

SAGEM
2 526 114 A

[03] **Supplied until depletion**
- Fornibile fino ad esaurimento delle scorte
- Fourni jusqu'à épuisement du stock
- Lieferbar solange vorrat reicht
- Suministrado hasta el stock termina

- + +	ohm	Ø 4	ohm
	0,7		9000

RENAULT		
CLIO II 1.4	E7J780	09/98 ⇨ 05/05
CLIO II 1.6	K7M744, K7M745	09/98 ⇨ 05/05
KANGOO I 1.4	E7J780	08/97 ⇨
MEGANE I 1.6 e	K7M702, K7M703, K7M790	01/96 ⇨ 08/03
MEGANE I 1.6 i	K7M720	01/96 ⇨ 03/99
MEGANE I 1.6 LPG	K7M702	08/95 ⇨ 03/99
MEGANE SCÉNIC I 1.6 e	K7M702, K7M703	10/96 ⇨ 10/99
MEGANE SCÉNIC I 1.6 i	K7M720	01/97 ⇨ 09/99
MEGANE 1.6 BiFuel	K7M702	10/96 ⇨ 10/99

FACET 9.6277

07

COILS

Adatt./Suitable:

[00] **Eliminated on 16-11-2021. Please verify the availability through our local distributors**
- Eliminato il 16-11-2021. Verificare la disponibilità presso i nostri distributori
- Eliminé le 16-11-2021. Verifier la disponibilité auprès de nos distributeurs sur place
- Am 16-11-2021 gestrichen. Evtl. Verfügbarkeit bitte bei unseren Händlern prüfen
- Eliminado en fecha 16-11-2021. Verificar la disponibilidad a través de nuestros distribuidores locales

[RB] **Replaced by**
- Sostituito da
- Remplacé par
- Ersetzt durch
- Reemplazado por

9.6496

- - + +	ohm	Ø 4	ohm
	0,7		9000

FACET 9.6278

05

COILS

Adatt./Suitable:

BOSCH
0 986 221 026
HITACHI
138766
2508766
MAGNETI MARELLI
060717069012
RENAULT
77 00 100 643
SAGEM
2 526 115 A

[03] **Supplied until depletion**
- Fornibile fino ad esaurimento delle scorte
- Fourni jusqu'à épuisement du stock
- Lieferbar solange vorrat reicht
- Suministrado hasta el stock termina

- + +	ohm	Ø 4	ohm
	0,7		9000

RENAULT		
CLIO II 1.4	E7J780	09/98 ⇨ 05/05
CLIO II 1.6	K7M744, K7M745	09/98 ⇨ 05/05
KANGOO I 1.4	E7J780	08/97 ⇨
MEGANE I 1.6 e	K7M702, K7M703, K7M790	01/96 ⇨ 08/03
MEGANE I 1.6 i	K7M720	01/96 ⇨ 03/99
MEGANE I 1.6 LPG	K7M702	08/95 ⇨ 03/99
MEGANE SCÉNIC I 1.6 e	K7M702, K7M703	10/96 ⇨ 10/99
MEGANE SCÉNIC I 1.6 i	K7M720	01/97 ⇨ 09/99
MEGANE 1.6 BiFuel	K7M702	10/96 ⇨ 10/99

FACET 9.6284

05,5

COILS

Adatt./Suitable:

FIAT
46473849
HITACHI
133926
2503926
CM11-202
LANCIA
46473849
MAGNETI MARELLI
060810090010

IN GND +	ohm		ohm	
	---		---	

FIAT		
BARCHETTA 1.8 16V	183A1.000, 188A6.000	04/95 ⇨ 05/05
BRAVO I 1.8 GT	182A2.000	10/95 ⇨ 10/01
COUPE 1.8 16V	183A1.000	03/96 ⇨ 08/00
PUNTO II 1.8 130 HGT	183A1.000, 188A6.000	09/99 ⇨ 03/12
PUNTO II 1.8 16V	188A6.000	06/03 ⇨
STILO 1.8 16V	192A4.000	10/01 ⇨ 08/08

FIAT (BR)		
BRAVA 1.8i 16v	1.8Mpi	01/00 ⇨
MAREA 1.8i 16v	1.8Mpi	01/00 ⇨ 12/01
LANCIA		
DELTA II 1.8 i.e. 16V GT	183A1.000	03/96 ⇨ 08/99
LYBRA 1.8 16V	839A4.000, 839A7.000, 839A9.000	07/99 ⇨ 10/05

FACET 9.6286

05

COILS

Adatt./Suitable:

ALFA ROMEO
71711984
7793212
BOSCH
1 227 030 059

[255] **without spark plug connector**
- senza cappuccio candela d'accensione
- sans cosse de bougie d'allumage
- ohne Zündkerzenstecker
- sin conector de bujía de encendido

[301] **Paired article numbers**
- N° articolo appaiato
- Numéro d'article en paire
- paarige Artikelnummer
- Referencia artículo par

9.6286K

- +	ohm	Ø 4 Ø 5	ohm
	0,33		7500

ALFA ROMEO		
145 1.4 i.e. 16V T.S.	AR33503	12/96 ⇨ 01/01
145 1.6 i.e. 16V T.S.	AR32102, AR67601	12/96 ⇨ 01/01
145 1.6 LPG	AR32102	01/98 ⇨ 01/01
145 1.8 i.e. 16V T.S.	AR67106	12/96 ⇨ 12/98
145 1.8 i.e. 16V T.S. [BRA]	AR67199	10/96 ⇨ 02/99
145 2.0 16V T.S.	AR67204	10/95 ⇨ 01/01
145 2.0 16V T.SPARK [BRA]	AR67299	10/96 ⇨ 02/99
146 1.4 i.e. 16V T.S.	AR33503	11/96 ⇨ 01/01
146 1.6 i.e. 16V T.S.	AR32102, AR67601	11/96 ⇨ 10/01
146 1.8 i.e. 16V T.S.	AR67106	11/96 ⇨ 01/01
146 2.0 16V T.S.	AR67204	10/95 ⇨ 01/01
155 1.6 16V T.S.	AR67601	05/96 ⇨ 12/97
155 1.7 T.S. 16V	AR67106	05/96 ⇨ 12/97
155 2.0 T.S. 16V	AR67204, AR67299	03/95 ⇨ 12/97
156 1.6 16V T.SPARK	AR67601	09/97 ⇨ 09/05
156 1.6 16V T.SPARK.	AR67601	05/00 ⇨ 05/06
GTV 2.0 T.SPARK 16V	AR16201	06/95 ⇨ 10/05
SPIDER II 2.0 T.SPARK 16V	AR16201	06/95 ⇨ 04/05

FACET 9.6286K — 05

COILS

Adatt./Suitable:

ALFA ROMEO
60605306 *1

BOSCH
0 221 506 001

*1 **Without fastening clamp**
- Senza staffa di fissaggio
- sans bride de fixation
- ohne Befestigungsbügel
- sin estribo de sujeción

245 **without fastening clamp**
- senza staffa fissaggio
- sans bride de fixation
- ohne Befestigungsbügel
- sin estribo de sujeción

250 **incl. spark plug connector**
- con cappuccio candela accensione
- Cosse de bougie d'allumage comprise
- inkl. Zündkerzenstecker
- incl. conector bujías

302 **Paired article numbers**
- N° articolo appaiato
- Numéro d'article en paire
- paarige Artikelnummer
- Referencia artículo par

9.6286

	ohm		ohm
- +	0,33	Ø 4 Ø 5	7500

ALFA ROMEO		
145 1.8 i.e. 16V T.S. [BRA]	AR67199	10/96 ⇨ 02/99
145 2.0 16V T.SPARK [BRA]	AR67299	10/96 ⇨ 02/99
145 2.0 16V T.SPARK Q.V. [BRA]	AR67299	10/95 ⇨ 09/96
155 1.6 16V T.S.	AR67601	05/96 ⇨ 12/97
155 1.7 T.S. 16V	AR67106	05/96 ⇨ 12/97
155 2.0 T.S. 16V	AR67204, AR67299	03/95 ⇨ 12/97

FACET 9.6287 — 05

COILS

Adatt./Suitable:

ALFA ROMEO
46469863

BOSCH
1 227 030 062

HITACHI
133861
2503861

255 **without spark plug connector**
- senza cappuccio candela d'accensione
- sans cosse de bougie d'allumage
- ohne Zündkerzenstecker
- sin conector de bujía de encendido

301 **Paired article numbers**
- N° articolo appaiato
- Numéro d'article en paire
- paarige Artikelnummer
- Referencia artículo par

9.6287K

	ohm		ohm
- +	0,33	Ø 4 Ø 5	7500

ALFA ROMEO		
145 1.4 i.e. 16V T.S.	AR33503	12/96 ⇨ 01/01
145 1.6 16V T.S.	AR32102	09/97 ⇨ 12/00
145 1.6 i.e. 16V T.S.	AR32102, AR67601	12/96 ⇨ 01/01
145 1.6 LPG	AR32102	01/98 ⇨ 01/01
145 1.8 i.e. 16V	AR32201	03/98 ⇨ 01/01
145 2.0 16V	AR32301	03/98 ⇨ 01/01
146 1.4 i.e. 16V T.S.	AR33503	11/96 ⇨ 01/01
146 1.6 16V T.S.	AR32102	09/97 ⇨ 12/00
146 1.6 i.e. 16V T.S.	AR32102, AR67601	11/96 ⇨ 10/01
146 1.8 i.e. 16V T.S.	AR32201	03/98 ⇨ 01/01
146 2.0 16V	AR32301	03/97 ⇨ 10/01
146 2.0 16V T.S.	AR67204	10/95 ⇨ 01/01
156 1.6 16V T.SPARK	AR32102, AR67601	09/97 ⇨ 09/05
156 1.6 16V T.SPARK.	AR32102, AR67601	05/00 ⇨ 05/06
156 1.8 16V T.SPARK	AR32201, AR32205	09/97 ⇨ 05/06
156 2.0 16V T.SPARK	AR32301, AR32310	05/00 ⇨ 06/02
156 2.0 Twin Spark	AR32303	11/97 ⇨ 04/00
166 2.0 T.Spark	AR34103	09/98 ⇨ 10/00
GTV 1.8 16V	AR32201	05/98 ⇨ 10/05
GTV 2.0 T.SPARK 16V	AR16201, AR32301	06/95 ⇨ 10/05
SPIDER II 1.8 16V	AR32201	05/98 ⇨ 04/05
SPIDER II 2.0 T.SPARK 16V	AR32301	05/98 ⇨ 08/00

FACET 9.6287K — 05

COILS

Adatt./Suitable:

250 **incl. spark plug connector**
- con cappuccio candela accensione
- Cosse de bougie d'allumage comprise
- inkl. Zündkerzenstecker
- incl. conector bujías

302 **Paired article numbers**
- N° articolo appaiato
- Numéro d'article en paire
- paarige Artikelnummer
- Referencia artículo par

9.6287

	ohm		ohm
- +	0,33	Ø 4 Ø 5	7500

ALFA ROMEO		
156 1.6 16V T.SPARK.	AR32102	05/00 ⇨ 05/06

FACET 9.6289 — 07

COILS

Adatt./Suitable:

BOSCH
0 221 503 011

GENERAL MOTORS
90 506 102

OPEL
12 08 076
90506102

VAUXHALL
90506102

03 **Supplied until depletion**
- Fornibile fino ad esaurimento delle scorte
- Fourni jusqu'à épuisement du stock
- Lieferbar solange vorrat reicht
- Suministrado hasta el stock termina

	ohm		ohm
- - + +	0,7	Ø 4	9000

OPEL		
SINTRA 2.2 i 16V	X22XE	11/96 ⇨ 04/99
VAUXHALL		
SINTRA 2.2 i 16 V	X22XE	11/96 ⇨ 04/99

FACET 9.6294 — 05

COILS

Adatt./Suitable:

HYUNDAI
27301-02502 *U

*U **Supplied only the coil, not the mounting bracket, not the module**
- Fornita solo la bobina, nol la staffa di fissaggio, non il modulo
- Fourni seule la bobine, non pas le support de montage, et non pas le module
- nur die Spule geliefert wird, nicht die Montagehalterung, nicht das Modul
- Suministra sólo la bobina, no el soporte de montaje, no el módulo

03 **Supplied until depletion**
- Fornibile fino ad esaurimento delle scorte
- Fourni jusqu'à épuisement du stock
- Lieferbar solange vorrat reicht
- Suministrado hasta el stock termina

	ohm		ohm
+ -	0,85	Ø 8.2	11500

HYUNDAI		
ATOS 1.0 i	G4HC	02/98 ⇨ 12/00

FACET 9.6297 — 05

COILS

Adatt./Suitable:

ALFA ROMEO
46755605
BOSCH
1 227 030 071
HITACHI
133841
2503841

255 **without spark plug connector**
- senza cappuccio candela d'accensione
- sans cosse de bougie d'allumage
- ohne Zündkerzenstecker
- sin conector de bujía de encendido

301 **Paired article numbers**
- N° articolo appaiato
- Numéro d'article en paire
- paarige Artikelnummer
- Referencia artículo par

9.6297K

	ohm		ohm
- +	0,33	Ø 4 Ø 5	13500

ALFA ROMEO		
147 1.6 16V T.SPARK	AR32104	01/01 ⇨ 03/10
147 1.6 16V T.SPARK ECO	AR37203	01/01 ⇨ 03/10
147 1.6 LPG	AR32104, AR37203	03/01 ⇨ 03/10
147 2.0 16V T.SPARK	AR32310	01/01 ⇨ 03/10
156 1.6 16V T.SPARK	AR32103, AR32104	09/97 ⇨ 09/05
156 1.6 16V T.SPARK.	AR32103, AR32104	05/00 ⇨ 05/06
156 1.8 16V T.SPARK	AR32201, AR32205	09/97 ⇨ 05/06
156 2.0 16V T.SPARK	AR32301, AR32310	05/00 ⇨ 06/02
156 2.0 Twin Spark	AR32303	11/97 ⇨ 04/00
166 2.0 T.Spark	AR36301	10/00 ⇨ 06/07
GT 1.8 TS	AR32205	11/03 ⇨ 09/10
GTV 2.0 T.SPARK 16V	AR32310	06/95 ⇨ 10/05
SPIDER II 2.0 T.SPARK 16V	AR32310	06/95 ⇨ 04/05

FACET 9.6297K — 05

COILS

Adatt./Suitable:

250 **incl. spark plug connector**
- con cappuccio candela accensione
- Cosse de bougie d'allumage comprise
- inkl. Zündkerzenstecker
- incl. conector bujías

302 **Paired article numbers**
- N° articolo appaiato
- Numéro d'article en paire
- paarige Artikelnummer
- Referencia artículo par

9.6297

	ohm		ohm
- +	0,33	Ø 4 Ø 5	13500

ALFA ROMEO		
156 1.6 16V T.SPARK.	AR32103	05/00 ⇨ 05/06
156 2.0 16V T.SPARK	AR32310	09/97 ⇨ 06/02

FACET 9.6298 — 08,5

COILS

Adatt./Suitable:

BOSCH
0 221 503 014
0 221 503 471

GENERAL MOTORS
90 543 059
93 180 806

HITACHI
133815
133866
2503815
2503866

MAGNETI MARELLI
060717081012
060810208010

OPEL
12 08 028
12 08 306
90543059
93180806

VAUXHALL
90543059
93180806

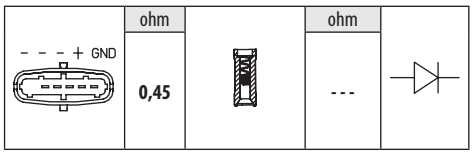

OPEL		
AGILA A 1.0	Z10XEP	08/03 ⇨ 12/07
AGILA A 1.0 12V	Z10XE	09/00 ⇨ 12/07
CORSA B 1.0 i 12V	X10XE	11/96 ⇨ 09/00
CORSA C 1.0	1K10CT, Z10XEP	09/00 ⇨ 12/09
CORSA D 1.0	Z10XEP	07/06 ⇨ 08/14
VAUXHALL		
AGILA A 1.0 12V	Z10XE, Z10XEP	02/00 ⇨ 11/06
CORSA B 1.0 i 12V	X10XE	11/96 ⇨ 09/00
CORSA C 1.0 12V	Z10XE, Z10XEP	09/00 ⇨ 10/06
CORSA D 1.0	Z10XEP	08/06 ⇨ 08/14

FACET 9.6299 — 08,6

COILS

Adatt./Suitable:

BOSCH
0 986 221 039

GENERAL MOTORS
19 005 212

HITACHI
133809
2503809

MAGNETI MARELLI
060717052012

OPEL
12 08 307
19005212

VAUXHALL
19005212

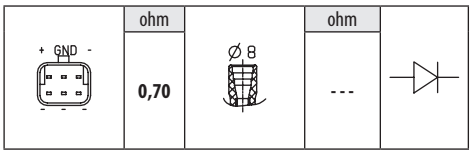

OPEL		
ASTRA G 1.4	X14XE, Z14XE	09/98 ⇨ 04/05
ASTRA G 1.4 16V	X14XE, Z14XE	02/98 ⇨ 01/05
ASTRA G 1.4 LPG	X14XE, Z14XE	02/98 ⇨ 01/05
ASTRA G 1.6	C16SEL, Z16XE, Z16XEP	09/98 ⇨ 05/04
ASTRA G 1.6 16V	X16XEL, Z16XE	02/98 ⇨ 10/05
ASTRA G 1.6 CNG	Z16YNG	03/03 ⇨ 07/04
ASTRA G 1.6 LPG	X16XEL, Z16XE	03/98 ⇨ 01/05
ASTRA H 1.4 16V	Z14XE	05/04 ⇨ 07/09
ASTRA H 1.6	Z16XE	06/04 ⇨ 02/06
ASTRA H 1.6 16V	Z16XE	03/04 ⇨ 01/08
ZAFIRA B 1.6 CNG	Z16YNG	07/05 ⇨ 04/15
ZAFIRA B 1.6 CNG VAN	Z16YNG	07/05 ⇨ 04/15
COMBO C 1.6 CNG	Y16YNG, Z16YNG	04/05 ⇨ 12/11
COMBO C 1.6 CNG 16V	Y16YNG, Z16YNG	04/05 ⇨
CORSA C 1.4	Z14XE	09/00 ⇨ 12/09
CORSA C 1.6 CNG	Y16YNG	05/03 ⇨ 12/09
CORSA C 1.6 X	Z16YNG	08/05 ⇨
MERIVA A 1.6 16V	Z16XE	05/03 ⇨ 01/06
VECTRA B 1.6 i 16V	X16XEL, Y16XE, Z16XE	10/95 ⇨ 07/02
VECTRA C 1.6	Z16XE	08/05 ⇨ 08/08
VECTRA C 1.6 16V	Z16XE	06/04 ⇨ 10/05
ZAFIRA A 1.6 16V	X16XEL, Z16XE, Z16YNG	09/02 ⇨ 06/05
ZAFIRA A 1.6 CNG	Z16YNG	09/01 ⇨ 06/05
ZAFIRA A 1.6 LPG	X16XEL, Z16XE	10/03 ⇨ 06/05
VAUXHALL		
ASTRA IV 1.4 16V	X14XE, Z14XE	02/98 ⇨ 05/05
ASTRA IV 1.4 16V Dualfuel	X14XE, Z14XE	09/99 ⇨ 06/03
ASTRA IV 1.6 16V	X16XEL, Z16XE	02/98 ⇨ 10/05
ASTRA IV 1.6 Dualfuel	X16XEL, Z16XE	03/98 ⇨ 05/05
ZAFIRA A 1.6 16V	X16XEL, Z16XE	04/99 ⇨ 08/05
ZAFIRA A 1.6 CNG	Z16YNG	09/01 ⇨ 06/05
ZAFIRA A 1.6 Dualfuel	X16XEL	11/98 ⇨ 08/05
ASTRAVAN II 1.4 16V	Z14XE	09/00 ⇨ 05/05
ASTRAVAN II 1.6 Dualfuel	Z16XE	07/00 ⇨ 08/05
COMBO C 1.4 16V	Z14XE	10/01 ⇨ 05/07
COMBO C 1.6 CNG	Z16YNG	04/05 ⇨ 02/12
COMBO C 1.6 CNG 16V	Y16YNG, Z16YNG	04/05 ⇨ 02/12
CORSA C 1.4 16V	Z14XE	09/00 ⇨ 10/06
MERIVA I 1.6 i 16V	Z16XE	01/03 ⇨ 09/05
VECTRA B 1.6 i 16V	X16XEL, Y16XE, Z16XE	08/95 ⇨ 03/02
VECTRA C 1.6 16V	Z16XE	06/04 ⇨ 07/08
ZAFIRA B 1.6 CNG	Z16YNG	07/05 ⇨ 11/14

FACET 9.6300 — 08,5

COILS

Adatt./Suitable:

BOSCH
0 221 503 015
0 221 503 472

GENERAL MOTORS
24 420 584
90 543 253
93 177 212

HITACHI
133816
133839
2503816
2503839

MAGNETI MARELLI
060717065012
060717133012

OPEL
12 08 012
12 08 020
90543253
93177212

VAUXHALL
90543253
93177212

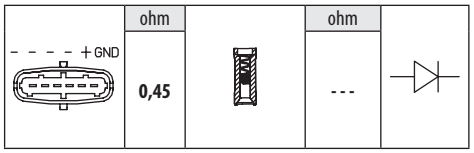

OPEL		
AGILA A 1.2 16V	Z12XE	09/00 ⇨ 12/07
AGILA A 1.2 16V Twinport	Z12XEP	07/04 ⇨ 12/07
ASTRA G 1.2	X12XE	09/98 ⇨ 08/00
ASTRA G 1.2 16V	X12XE, Z12XE	09/00 ⇨ 01/05
ASTRA G 1.4	Z14XEP	09/07 ⇨ 12/09
ASTRA H 1.2	Z12XEP	08/05 ⇨ 10/10
ASTRA H 1.4	Z14XEL, Z14XEP	03/04 ⇨ 10/10
ASTRA H 1.4 EcoTec	Z14XEP	12/04 ⇨ 12/12
ASTRA H 1.4 LPG	Z14XEP	08/09 ⇨ 10/10
ASTRA J 1.4	Z14XEP	01/09 ⇨
COMBO C 1.4	Z14XEP	10/04 ⇨ 12/11
COMBO C 1.4 16V	Z14XEP	08/05 ⇨
CORSA B 1.2 i 16V	X12XE	03/98 ⇨ 09/00
CORSA C 1.2	Z12XE	09/00 ⇨ 12/09
CORSA C 1.2 16V	Z12XE	09/00 ⇨ 07/03
CORSA C 1.2 Twinport	Z12XEP	07/04 ⇨ 12/09
CORSA C 1.4	Z14XEP	08/03 ⇨ 06/12
CORSA C 1.4 Twinport	Z14XEP	06/03 ⇨ 12/09
CORSA D 1.2	Z12XEP	07/06 ⇨ 08/14
CORSA D 1.2 LPG	Z12XEP	08/06 ⇨ 08/14
CORSA D 1.4	Z14XEP	07/06 ⇨ 08/14
CORSA D 1.4 LPG	Z14XEP	08/06 ⇨ 12/11
MERIVA A 1.4 16V Twinport	Z14XEP	07/04 ⇨ 05/10
MERIVA A 1.4 16V Twinport LPG	Z14XEP	07/04 ⇨ 05/10
TIGRA B 1.4	Z14XEP	06/04 ⇨ 12/10
VAUXHALL		
AGILA A 1.2 16V	Z12XE	09/00 ⇨ 03/08
AGILA A 1.2 16V Twinport	Z12XEP	07/04 ⇨ 11/06
ASTRA IV 1.2 16V	X12XE, Z12XE	09/00 ⇨ 05/05
ASTRA V 1.2	Z12XEP	08/05 ⇨ 10/10
ASTRA V 1.4	Z14XEL, Z14XEP	01/04 ⇨ 10/10
ASTRA V 1.4 i 16V	Z14XEP	03/05 ⇨ 11/10
COMBO C 1.4	Z14XEP	10/04 ⇨ 09/10
COMBO C 1.4 i 16V	Z14XEP	01/04 ⇨ 11/11
CORSA B 1.2 i 16V	X12XE	03/98 ⇨ 09/00
CORSA C 1.2 16V	Z12XE	09/00 ⇨ 10/06
CORSA C 1.2 16V Dualfuel	Z12XE	08/01 ⇨ 10/06
CORSA C 1.2 Twinport	Z12XEP	07/04 ⇨ 10/06
CORSA C 1.4 Twinport	Z14XEP	06/03 ⇨ 10/06
CORSA D 1.2	Z12XEP	08/06 ⇨ 08/14
CORSA D 1.2 LPG	Z12XEP	09/09 ⇨ 08/14
CORSA D 1.4	Z14XEP	08/06 ⇨ 08/14
CORSA D 1.4 LPG	Z14XEP	07/06 ⇨ 08/14
CORSAVAN II 1.2 16V	Z12XE, Z12XEP	09/00 ⇨ 11/06

VAUXHALL		
CORSAVAN II 1.2 16V Dualfuel	Z12XE, Z12XEP	08/01 ⇨ 06/06
CORSAVAN II 1.4	Z14XEP	11/03 ⇨ 06/06
CORSAVAN III 1.2	Z12XEP	07/09 ⇨
ASTRAVAN III 1.4 i	Z14XEP	03/05 ⇨
MERIVA I 1.4 16V Twinport	Z14XEP	01/03 ⇨ 06/10
TIGRA B 1.4	Z14XEP	06/04 ⇨ 08/09

FACET 9.6303

08,5

COILS

Adatt./Suitable:

BOSCH
0 986 221 034

CITROËN
5970 72
5970 74
5970 A9
96 246 755 80
96 281 585 80

ELECTRICFIL
15 43 01

HITACHI
133817
2503817

MAGNETI MARELLI
060717031012

PEUGEOT
5970 72
5970 74
5970 A9
96 246 755 80
96 281 585 80

SAGEM
2 526 117 A

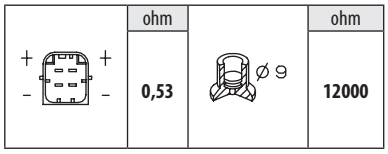

CITROËN		
XSARA 1.4	KFX(TU3JP)	05/98 ⇨ 10/04
XSARA 1.4 i	KFW(TU3JP), KFX(TU3JP)	04/97 ⇨ 08/05
XSARA 1.4 LPG	KFW(TU3JP), KFX(TU3JP)	05/98 ⇨ 08/00
XSARA 1.6 i	NFZ(TU5JP)	04/97 ⇨ 09/00
BERLINGO I 1.4 BiFuel	KFW(TU3JP)	07/96 ⇨ 10/02
BERLINGO I 1.4 bivalent	KFW(TU3JP)	11/02 ⇨ 12/11
BERLINGO I 1.4 i	KFW(TU3JP), KFX(TU3JP)	07/96 ⇨ 12/11
BERLINGO I 1.4 i bivalent	KFW(TU3JP)	04/03 ⇨ 10/08
SAXO 1.4 VTS	KFW(TU3JP), KFX(TU3JP)	05/96 ⇨ 06/03
SAXO 1.6	NFZ(TU5JP)	02/96 ⇨ 06/03
SAXO 1.6 VTL, VTR	NFZ(TU5JP)	05/96 ⇨ 06/03
XSARA PICASSO 1.6	NFZ(TU5JP)	06/02 ⇨ 08/05
PEUGEOT		
106 II 1.4 i	KFW(TU3JP), KFX(TU3JP)	05/96 ⇨ 07/04
206 1.1	HFX(TU1JP)	08/98 ⇨ 02/07
206 1.1 i	HFX(TU1JP), HFZ(TU1JP)	09/98 ⇨ 02/07
206 1.4 i	K6C(TU3JP), KFX(TU3JP)	09/98 ⇨
206 1.6 8V	NFZ(TU5JP)	05/99 ⇨ 10/03
206 1.6 i	NFZ(TU5JP)	09/98 ⇨ 12/00
306 1.4	KFW(TU3JP), KFX(TU3JP)	04/93 ⇨ 04/02
306 1.4 SL	KFW(TU3JP), KFX(TU3JP)	06/94 ⇨ 05/01
306 1.6	NFZ(TU5JP)	05/93 ⇨ 10/00
306 1.6 SR	NFZ(TU5JP)	06/94 ⇨ 10/00
RANCH 1.4	K6C(TU3JP), KFX(TU3JP)	06/96 ⇨

FACET 9.6305

08,6

COILS

Adatt./Suitable:

BOSCH
0 986 221 035
0 986 221 084

CITROËN
5970 78
5970 79
5970 90
5970 97
5970 A8
96 358 647 80
96 358 649 80
96 548 144 80

ELECTRICFIL
15 43 02

FIAT
9467511580
9654347080

HITACHI
133818
2503818

MAGNETI MARELLI
060717030012

PEUGEOT
5970 78
5970 79
5970 90
5970 97
5970 A8
5979 A8

SAGEM
26951960-3

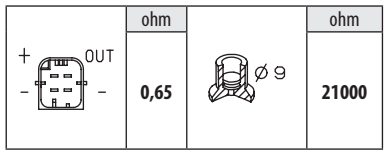

CITROËN		
C2 1.1	HFX(TU1JP)	09/03 ⇨ 09/12
C2 1.4	KFV(TU3JP)	09/03 ⇨ 12/09
C3 I PLURIEL 1.4	KFV(TU3A), KFV(TU3JP)	05/03 ⇨
C3 I PLURIEL 1.4 Hybrid	KFV(TU3JP)	05/05 ⇨
C3 II 1.1 BiFuel	HFX(TU1A)	11/10 ⇨
C3 II 1.1 i	HFV(TU1A), HFX(TU1A)	09/09 ⇨ 01/13
C3 II 1.4	K6E(TU3A), KFT(TU3A), KFT(TU3AE5), TU3AE5	11/09 ⇨
C3 II 1.4 LPG	KFT(TU3A)	07/10 ⇨
C3 I 1.1 i	HFX(TU1A), HFX(TU1JP)	02/02 ⇨
C3 I 1.1 LPG	HFX(TU1A)	06/06 ⇨ 12/09
C3 I 1.4 BiFuel	KFV(TU3JP)	09/08 ⇨ 12/09
C3 I 1.4 i	KFV(TU3A), KFV(TU3JP)	02/02 ⇨ 11/10
C3 I 1.4 i Bivalent	KFV(TU3JP)	02/02 ⇨
XSARA 1.4	KFX(TU3JP)	05/98 ⇨ 03/05
XSARA 1.4 i	KFW(TU3JP), KFX(TU3JP)	04/97 ⇨ 08/05
BERLINGO I 1.1 i	HFX(TU1JP)	07/96 ⇨ 05/08
BERLINGO I 1.4	K6D(TU3A), KFW(TU3A), KFW(TU3JP)	11/02 ⇨
BERLINGO I 1.4 BiFuel	KFW(TU3JP)	07/96 ⇨ 10/02
BERLINGO I 1.4 bivalent	KFW(TU3JP)	11/02 ⇨ 12/11
BERLINGO I 1.4 CNG	KFW(TU3JP)	11/02 ⇨ 03/08
BERLINGO I 1.4 GNC	KFW(TU3JP)	11/02 ⇨
BERLINGO I 1.4 Hybrid	KFW(TU3JP)	05/05 ⇨
BERLINGO I 1.4 i	KFW(TU3JP), KFX(TU3JP)	07/96 ⇨ 12/11
BERLINGO I 1.4 i bivalent	KFW(TU3JP)	04/03 ⇨ 10/08
NEMO 1.4	KFT(TU3A), KFV(TU3A), TU3AE5	02/08 ⇨
SAXO 1.1 X, SX	HFX(TU1JP)	05/96 ⇨ 09/03
SAXO 1.4 VTS	KFW(TU3JP), KFX(TU3JP)	05/96 ⇨ 06/03
SAXO 1.6	NFT(TU5JP)	02/01 ⇨ 04/04
SAXO 1.6 VTS	NFT(TU5JP)	09/00 ⇨ 09/03
XSARA PICASSO 1.6	NFV(TU5JP)	12/99 ⇨ 12/10
XSARA PICASSO 1.6 Chrono	NFV(TU5JP)	04/01 ⇨ 10/04
FIAT		
FIORINO III 1.4	KFT, KFV	11/07 ⇨
QUBO 1.4	KFT, KFV	02/08 ⇨
PEUGEOT		
106 II 1.1 i	HFX(TU1JP)	05/96 ⇨ 07/04

PEUGEOT		
106 II 1.4 i	KFW(TU3JP), KFX(TU3JP)	05/96 ⇨ 07/04
206 1.1	HFX(TU1JP)	08/98 ⇨ 02/07
206 1.1 i	HFX(TU1JP), HFZ(TU1JP)	09/98 ⇨ 02/07
206 1.4	KFV(TU3A), KFW(TU3JP)	07/02 ⇨
206 1.4 CNG	KFW(TU3A)	05/06 ⇨ 09/07
206 1.4 i	K6D(TU3A), K6D(TU3JP), KFW(TU3A), KFW(TU3JP), TU3AF	04/05 ⇨
206 1.4 LPG	KFV(TU3JP)	07/02 ⇨ 09/07
207 1.4	KFT(TU3A), KFT(TU3AE5), KFV(TU3A), KFW(TU3A)	02/06 ⇨ 12/15
207 1.4 BiFuel	KFV(TU3A)	08/07 ⇨ 12/13
207 1.4 Flex	KFW(TU3A)	11/08 ⇨ 12/14
207 1.4 LPG	KFV(TU3A)	08/07 ⇨ 12/12
306 1.4	KFW(TU3JP), KFX(TU3JP)	04/93 ⇨ 04/02
306 1.4 SL	KFW(TU3JP), KFX(TU3JP)	06/94 ⇨ 05/01
306 1.6	NFT(TU5JP)	10/00 ⇨ 04/02
307 1.4	K6D(TU3JP), KFW(TU3JP)	08/00 ⇨
206+ 1.1	HFX(TU1A)	01/09 ⇨ 06/13
206+ 1.1 LPG	HFX(TU1A), HFX(TU1JP)	04/09 ⇨ 06/13
206+ 1.4 i	K6D(TU3A), KFT(TU3AE5), KFW(TU3A), TU3AE5	01/09 ⇨
1007 1.4	KFV(TU3A), KFV(TU3JP)	04/05 ⇨
BIPPER 1.4	KFV(TU3A), TU3AE5	02/08 ⇨
BIPPER TEPEE 1.4	KFV(TU3A)	04/08 ⇨
PARTNER I 1.1	HDZ(TU1M), HFX(TU1JP)	06/96 ⇨ 10/02
PARTNER I 1.4	K6D(TU3A), KFW(TU3JP)	11/02 ⇨
PARTNER I 1.4 BiFuel	KFW(TU3JP)	04/03 ⇨ 10/06
PARTNER ORIGIN 1.4	KFW(TU3JP)	07/08 ⇨ 12/15
RANCH 1.1	HFX(TU1JP)	06/96 ⇨
RANCH 1.4	K6D(TU3A), K6D(TU3JP), KFW(TU3A), KFW(TU3JP)	04/05 ⇨
RANCH 1.4 BiFuel	KFW(TU3JP)	04/03 ⇨

FACET 9.6307

08,6

COILS

Adatt./Suitable:

CITROËN
5970 80
5970 99
96 363 378 80

HITACHI
133819
2503819

MAGNETI MARELLI
060717082012

PEUGEOT
5970 80
5970 99

SAGEM
2 526 182 A
2 526 182 B

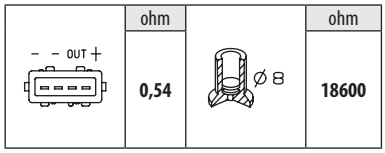

CITROËN		
C2 1.6	NFU(TU5JP4)	07/03 ⇨ 10/10
C2 1.6 VTS	NFS(TU5JP4S)	10/04 ⇨ 12/09
C3 I PLURIEL 1.6	NFU(TU5JP4)	05/03 ⇨
C4 I 1.6 16V	NFU(TU5JP4)	11/04 ⇨ 07/11
C4 I 1.6 16V Bio-Flex	N6A(TU5JP4), NFU(TU5JP4)	09/07 ⇨
C4 I 1.6 16V Flex Fuel	N6A(TU5JP4)	02/09 ⇨
C4 I 1.6 Flex	--	02/09 ⇨ 07/11
C3 II 1.6 Flex	NFX(TU5JP4)	11/09 ⇨
C4 II 1.6 Flex	NFX(TU5JP4)	11/09 ⇨
C3 I 1.6 16V	N6A(TU5JP4), NFU(TU5JP4)	02/02 ⇨
XSARA 1.6 16V	NFU(TU5JP4)	09/00 ⇨ 08/05
BERLINGO II 1.6	N6A(TU5JP4), NFR(TU5JP4B), NFU(TU5JP4)	04/08 ⇨
BERLINGO I 1.6 16V	NFU(TU5JP4)	10/00 ⇨ 12/11

CITROËN		
XSARA PICASSO 1.6 16V	N6A(TU5JP4), NFU(TU5JP4)	03/05 ⇨
PEUGEOT		
206 1.6	NFU(TU5JP4)	09/01 ⇨ 12/08
206 1.6 16V	N6A(TU5JP4), NFU(TU5JP4)	07/00 ⇨
206 1.6 BiFuel	NFU(TU5JP4)	07/00 ⇨ 04/09
206 1.6 LPG	NFU(TU5JP4)	07/02 ⇨
207 1.6	N6A(TU5JP4)	08/08 ⇨
207 1.6 16V	NFU(TU5JP4)	02/06 ⇨ 10/13
207 1.6 Bioflex	N6A(TU5JP4)	01/08 ⇨ 12/13
308 I 1.6 16V	N6A(TU5JP4)	07/08 ⇨
308 I 1.6 Bioflex	N6A(TU5JP4), NFU(TU5JP4)	04/08 ⇨
307 1.6	NFU(TU5JP4)	07/06 ⇨ 04/12
307 1.6 16V	N6A(TU5JP4), NFU(TU5JP4)	08/00 ⇨
307 1.6 BioFlex	--, N6A(TU5JP4), NFU(TU5JP4)	07/06 ⇨
206+ 1.6 16V	NFU(TU5JP4)	07/10 ⇨
1007 1.6 16V	NFU(TU5JP4)	04/05 ⇨
PARTNER I 1.6	N6A(TU5JP4)	09/00 ⇨
PARTNER I 1.6 16V	NFU(TU5JP4)	07/01 ⇨ 03/08
PARTNER I 1.6 Bioflex	NFU(TU5JP4)	09/00 ⇨ 10/02
PARTNER I 1.6 Flexfuel	NFU(TU5JP4)	09/00 ⇨ 10/02
PARTNER II 1.6	NFR(TU5JP4B), NFU(TU5JP4)	04/08 ⇨
PARTNER II TEPEE 1.6 VTi	NFR(TU5JP4B), NFU(TU5JP4)	04/08 ⇨
PARTNER ORIGIN 1.6	NFU(TU5JP4)	09/11 ⇨ 12/15
PARTNER ORIGIN 1.6 16V	NFU(TU5JP4)	09/11 ⇨ 12/13
RANCH 1.6 16V	N6A(TU5JP4), NFU(TU5JP4)	07/01 ⇨

FACET 9.6308 — 08,7

COILS

Adatt./Suitable:

BOSCH
0 986 22A 206

CITROËN
5970 75
5970 98
8970 98
96 341 314 80

FIAT
9463264180
9634131380

HITACHI
133883
2503883

LANCIA
9463264180
9634131380

MAGNETI MARELLI
060717104012

PEUGEOT
5970 75
5970 98

SAGEM
2 526 118 A

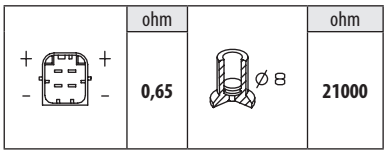

CITROËN		
C4 I 2.0 16V	RFN(EW10J4)	11/04 ⇨ 07/07
XSARA 2.0 16V	RFN(EW10J4)	09/00 ⇨ 08/05
C5 I 1.8	6FZ(EW7J4)	09/04 ⇨ 08/05
C5 I 1.8 16V	6FZ(EW7J4)	03/01 ⇨
C5 I 2.0 16V	RFN(EW10J4)	03/01 ⇨ 08/04
C8 2.0	RFN(EW10J4)	07/02 ⇨
EVASION 2.0 16V	RFN(EW10J4)	05/00 ⇨ 07/02
JUMPY I 2.0	RFN(EW10J4)	04/00 ⇨ 12/06
JUMPY I 2.0 i 16V	RFN(EW10J4)	03/00 ⇨ 10/06
XSARA PICASSO 1.8 16V	6FZ(EW7J4)	02/00 ⇨ 08/05
XSARA PICASSO 2.0	RFN(EW10J4)	02/04 ⇨ 10/04
XSARA PICASSO 2.0 16V	RFN(EW10J4)	01/03 ⇨ 06/12

FIAT		
ULYSSE I 2.0 16V	RFN(EW10J4)	09/00 ⇨ 08/02
SCUDO 2.0	RFN	09/99 ⇨ 10/06
SCUDO I 2.0	RFN, RFN(EW10J4)	05/00 ⇨ 12/06
SCUDO I 2.0 16V	RFN, RFN(EW10J4)	06/00 ⇨ 12/06
ULYSSE II 2.0	RFN, RFN(EW10J4)	08/02 ⇨ 06/11
LANCIA		
PHEDRA 2.0	RFN, RFN(EW10J4)	09/02 ⇨ 11/10
PEUGEOT		
206 2.0 16V	RFN(EW10J4)	07/02 ⇨ 02/07
206 2.0 S16	RFN(EW10J4), RFR(DEW10J4), RFR(EW10J4)	04/99 ⇨ 12/07
307 2.0	RFN(EW10J4)	03/02 ⇨ 06/05
307 2.0 16V	RFN(EW10J4)	08/00 ⇨ 04/08
406 1.8 16V	6FZ(EW7J4)	10/00 ⇨ 10/04
406 1.8 BiFuel	6FZ(EW7J4)	09/00 ⇨ 05/04
406 2.0 16V	RFN(EW10J4), RFR(DEW10J4), RFR(EW10J4), RFV(XU10J4R)	08/00 ⇨ 12/04
EXPERT I 2.0	RFN(EW10J4)	07/00 ⇨ 12/06
407 1.8	6FZ(EW7J4)	03/04 ⇨ 07/05
407 1.8 16V	6FY(EW7A)	08/05 ⇨ 12/10
407 2.0	RFN(EW10J4)	03/04 ⇨ 07/05
607 2.0	RFN(EW10J4)	02/00 ⇨ 08/05
806 2.0	RFN(EW10J4)	05/00 ⇨ 02/03
806 2.0 16V	RFN(EW10J4)	09/00 ⇨ 08/02
807 2.0	RFN(EW10J4)	06/02 ⇨

FACET 9.6312 — 05

COILS

Adatt./Suitable:

BOSCH
0 221 504 410
0 221 504 474

[00] **Eliminated on 17-11-2020. Please verify the availability through our local distributors**
- Eliminato il 17-11-2020. Verificare la disponibilità presso i nostri distributori
- Eliminé le 17-11-2020. Verifier la disponibilité auprès de nos distributeurs sur place
- Am 17-11-2020 gestrichen. Evtl. Verfügbarkeit bitte bei unseren Händlern prüfen
- Eliminado en fecha 17-11-2020. Verificar la disponibilidad a través de nuestros distribuidores locales

[250] **incl. spark plug connector**
- con cappuccio candela accensione
- Cosse de bougie d'allumage comprise
- inkl. Zündkerzenstecker
- incl. conector bujías

[302] **Paired article numbers**
- N° articolo appaiato
- Numéro d'article en paire
- paarige Artikelnummer
- Referencia artículo par

9.6062S

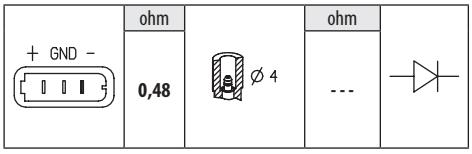

BMW		
3 III 320 i	M50B20(206S1), M50B20(206S2), M52B20(206S3)	01/91 ⇨ 11/99
3 III 325 i	M50B25(256S1), M50B25(256S2)	09/90 ⇨ 12/95
3 III M3 3.0	S50B30(306S1)	11/92 ⇨ 07/95
5 III 520 i	M50B20(206S1), M50B20(206S2)	07/91 ⇨ 07/96
5 III 520 i 24V	M50B20(206S1), M50B20(206S2)	04/90 ⇨ 08/95

BMW		
5 III 525 i	M50B25(256S1), M50B25(256S2)	07/91 ⇨ 07/96
5 III 525 i 24V	M50B25(256S2)	03/90 ⇨ 08/95
5 III 525 ix	M50B25(256S1)	01/92 ⇨ 03/96
5 III 525 iX 24V	M50B25(256S1), M50B25(256S2)	10/91 ⇨ 08/95
5 III 530 i	M60B30(308S1)	09/92 ⇨ 07/96
5 III 530 i V8	M60B30(308S1)	09/92 ⇨ 12/95
5 III 540 i	M60B40(408S1)	09/93 ⇨ 07/96
5 III 540 i V8	M60B40(408S1)	09/92 ⇨ 12/95
7 II 730 i, iL V8	M60B30(308S1)	04/92 ⇨ 09/94
7 II 740 i, iL V8	M60B40(408S1)	05/92 ⇨ 03/94
7 III 730 i, iL	M60B30(308S1)	03/94 ⇨ 02/96
7 III 740 i, iL	M60B40(408S1)	03/94 ⇨ 02/96
8 840 i	M60B40(408S1)	03/93 ⇨ 02/96

FACET 9.6313 — 05

COILS

Adatt./Suitable:

LAND ROVER
NEC101010L

MG
NEC101000
NEC101010

ROVER
NEC101000
NEC101000SLP
NEC101010

[00] **Eliminated on 17-11-2020. Please verify the availability through our local distributors**
- Eliminato il 17-11-2020. Verificare la disponibilità presso i nostri distributori
- Eliminé le 17-11-2020. Verifier la disponibilité auprès de nos distributeurs sur place
- Am 17-11-2020 gestrichen. Evtl. Verfügbarkeit bitte bei unseren Händlern prüfen
- Eliminado en fecha 17-11-2020. Verificar la disponibilidad a través de nuestros distribuidores locales

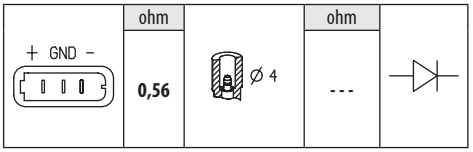

BMW		
3 III 320 i	M50B20(206S1), M50B20(206S2), M52B20(206S3)	01/91 ⇨ 11/99
3 III 323 i	M52B25(256S3)	05/95 ⇨ 11/99
3 III 323 ti	M52B25(256S3)	09/97 ⇨ 08/00
3 III 328 i	M52B28(286S1)	01/95 ⇨ 11/99
3 III M3 3.2	S50B32(326S1)	10/95 ⇨ 09/99
3 IV 320 Ci	M52B20(206S4), M54B22(226S1)	01/00 ⇨ 12/07
3 IV 320 i	M52B20(206S4), M54B22(226S1)	09/00 ⇨ 02/05
3 IV 323 Ci	M52B25(256S4)	04/99 ⇨ 09/00
3 IV 323 i	-(246S3), M52B25(256S4)	03/98 ⇨ 12/03
3 IV 325 Ci	M54B25(256S5)	09/00 ⇨
3 IV 325 i	-(246S4), M54B25(256S5), M56256S6	09/00 ⇨
3 IV 325 ti	M54B25(256S5)	04/01 ⇨ 12/04
3 IV 325 xi	M54B25(256S5)	09/00 ⇨ 02/05
3 IV 328 Ci	M52B28(286S2)	12/98 ⇨ 05/00
3 IV 328 i	M52B28(286S2)	02/98 ⇨ 06/00
3 IV 330 Ci	M54B30(306S3)	06/00 ⇨ 08/06
3 IV 330 i	M54B30(306S3)	06/00 ⇨ 02/05
3 IV 330 xi	M54B30(306S3)	06/00 ⇨ 07/06
5 IV 520 i	M54B22(226S1)	09/00 ⇨ 12/03
5 IV 523 i	M52B25(256S3)	09/95 ⇨ 08/00
5 IV 525 i	M54B25(256S5)	09/00 ⇨ 05/04
5 IV 528 i	M52B28(286S1), M52B28(286S2)	09/95 ⇨ 08/00
5 IV 530 i	M54B30(306S3)	09/00 ⇨ 12/03
5 IV 535 i	M62B35(358S2)	06/96 ⇨ 08/98
5 IV 540 i	M62B44(448S1), M62B44(448S2)	03/96 ⇨ 12/03
5 IV M5	S62B50(508S1)	10/98 ⇨ 06/03
7 III 728 i, iL	M52B28(286S1), M52B28(286S2)	08/95 ⇨ 11/01
7 III 728i X	M52B28(286S1)	11/95 ⇨ 09/01
7 III 735 i, iL	M62B35(358S1)	03/96 ⇨ 08/98

BMW		
7 III 740 i, iL	M62B44(448S1), M62B44(448S2)	02/96 ⇨ 07/01
8 840 Ci	M62B44(448S1)	03/96 ⇨ 06/99
Z3 2.0 i	M52B20(206S4)	04/99 ⇨ 01/03
Z3 2.2 i	M54B22(226S1)	08/00 ⇨ 01/03
Z3 2.8 i	M52B28(286S1), M52B28(286S2)	01/96 ⇨ 07/00
Z3 3.0 i	M54B30(306S3)	06/00 ⇨ 06/03
Z3 M	S50B32(326S1)	02/98 ⇨ 06/01
Z3 M 3.2	S50B32(326S1)	01/97 ⇨ 06/00
Z8 4.9	S62B50(508S1)	01/00 ⇨ 12/03
X5 I 3.0 i	M54B30(306S3)	04/00 ⇨ 12/06
X5 I 4.4 i	M62B44(448S2)	01/00 ⇨ 09/03
X5 I 4.6 is	M62B46(468S1)	10/01 ⇨ 09/03
LAND ROVER		
DEFENDER 2.8 90, 110	--	09/00 ⇨
FREELANDER 2.5 V6 4x4	25KV6	11/00 ⇨ 10/06
MG		
MG ZS 180	25K4F	07/01 ⇨ 10/05
ROVER		
45 2.0 V6	20K4F	02/00 ⇨ 05/05

FACET 9.6314 — 05

COILS

Adatt./Suitable:

BOSCH
0 221 503 022
MERCEDES-BENZ
A 000 158 77 03
A 160 158 77 03
SMART
Q 0003100V004000000
Q 0003100V005000000

[00] Eliminated on 16-12-2019. Please verify the availability through our local distributors

- Eliminato il 16-12-2019. Verificare la disponibilità presso i nostri distributori
- Eliminé le 16-12-2019. Verifier la disponibilité auprès de nos distributeurs sur place
- Am 16-12-2019 gestrichen. Evtl. Verfügbarkeit bitte bei unseren Händlern prüfen
- Eliminado en fecha 16-12-2019. Verificar la disponibilidad a través de nuestros distribuidores locales

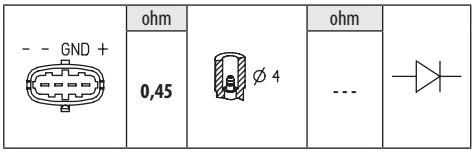

SMART		
CABRIO 0.6	M160E6ALB03, M160E-6ALB05, M160.910, M160.920	03/00 ⇨ 01/04
CABRIO 0.7	M160.910, M160.920	01/03 ⇨ 01/04
CITY COUPE 0.6	M160.910	12/99 ⇨ 04/03
CITY-COUPE 0.6	M160E6ALB03, M160E-6ALB04, M160E6ALB05, M160.910, M160.920	01/01 ⇨ 01/04
CITY-COUPE 0.7	M160.910, M160.920	01/03 ⇨ 01/04
CROSSBLADE 0.6	M160.910, M160.920	06/02 ⇨ 12/03
FORTWO I 0.6	M160.910	01/04 ⇨ 02/07
FORTWO I 0.7	M160.910, M160.920	01/04 ⇨ 01/07
ROADSTER 0.7	M160.921, M160.922	04/03 ⇨ 11/05
ROADSTER 0.7 Brabus	M160.923	12/03 ⇨ 11/05

FACET 9.6316 — 07

COILS

Adatt./Suitable:

BOSCH
F 000 ZS0 206 *4
F 000 ZS0 207
FIAT
46752948 *4
HITACHI
138878
2508878

[00] Eliminated on 23-02-2022. Please verify the availability through our local distributors

- Eliminato il 23-02-2022. Verificare la disponibilità presso i nostri distributori
- Eliminé le 23-02-2022. Verifier la disponibilité auprès de nos distributeurs sur place
- Am 23-02-2022 gestrichen. Evtl. Verfügbarkeit bitte bei unseren Händlern prüfen
- Eliminado en fecha 23-02-2022. Verificar la disponibilidad a través de nuestros distribuidores locales

[*4] Supplied coil only-not alu cast

- Fornita solo la bobina, non la fusione in alluminio
- Fourni seulement la bobine, non pas la fusion en alu
- Nur Zündspule alleine geliefert-ohne Gussteil
- Suministrada solamente bobina, no la fundición

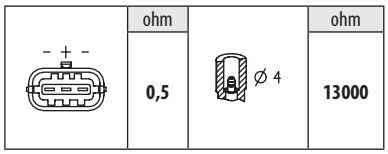

FIAT		
PALIO 1.0 MPI	178F1.011	11/03 ⇨ 07/05
PALIO 1.2 16V	178D7.055	06/05 ⇨
SIENA 1.2 16V	178D7.055	01/02 ⇨
SIENA 1.3	188A5.000	09/01 ⇨ 12/09
FIAT (BR)		
PALIO 1.0i 16v	1.0Mpi16vFire	01/01 ⇨
PALIO 1.3i 16v	1.3Mpi16vFire	01/00 ⇨
SIENA 1.3i 16v	1.3MpiFire	01/00 ⇨ 12/00

FACET 9.6317 — 05

COILS

Adatt./Suitable:

BOSCH
0 221 503 035
0 221 503 036
CHRYSLER
5098138AA
HITACHI
138709
2508709
MAGNETI MARELLI
060717163012
MAN
51.25919-0016
MERCEDES-BENZ
A 000 158 73 03
A 000 158 78 03
SCANIA
1789358

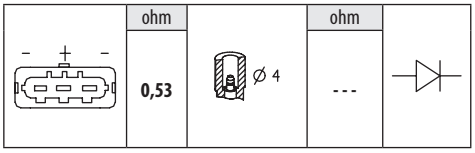

CHRYSLER		
CROSSFIRE 3.2	EGX	07/03 ⇨ 12/08
CROSSFIRE SRT-6	EGZ	09/04 ⇨ 12/07
MAN		
LION´S CITY	D0826LUH, E2876LUH02, E2876LUH03	05/07 ⇨
NG	E2866DUH01, E2876LUH02	05/07 ⇨ 07/99
NL	E2866DUH01, E2866DUH02, E2866DUH03, E2866LUH02, E2876LUH02	05/07 ⇨ 07/99
MERCEDES-BENZ		
CITARO	M476.930, M476.932, M476.933, M476.934	04/00 ⇨
CLASSE A II A 150	M266.920	09/04 ⇨ 06/12
CLASSE A II A 160	M266.920	04/09 ⇨ 06/12
CLASSE A II A 170	M266.940	09/04 ⇨ 06/12
CLASSE A II A 180	M266.940	04/09 ⇨ 06/12
CLASSE A II A 200	M266.960	09/04 ⇨ 06/12
CLASSE A II A 200 TURBO	M266.980	09/05 ⇨ 06/12
CLASSE B I B 150	M266.920	03/05 ⇨ 11/11
CLASSE B I B 160	M266.920	04/09 ⇨ 11/11
CLASSE B I B 170	M266.940	03/05 ⇨ 11/11
CLASSE B I B 170 NGT	M266.960, M266960NGT	04/08 ⇨ 11/11
CLASSE B I B 180	M266.940	04/09 ⇨ 11/11
CLASSE B I B 180 NGT	M266.960, M266960NGT	04/08 ⇨ 11/11
CLASSE B I B 200	M266.960	03/05 ⇨ 11/11
CLASSE B I B 200 TURBO	M266.980	03/05 ⇨ 11/11
CLASSE C I C 240	M112.910	06/97 ⇨ 05/00
CLASSE C I C 240 T	M112.910, M112.915	09/00 ⇨ 03/01
CLASSE C I C 280	M112.920	06/97 ⇨ 05/00
CLASSE C I C 280 T	M112.920	06/97 ⇨ 03/01
CLASSE C I C 43 AMG	M113.944	08/97 ⇨ 03/01
CLASSE C II C 240	M112.912	05/00 ⇨ 08/07
CLASSE C II C 240 4-matic	M112.916	07/02 ⇨ 08/07
CLASSE C II C 32 AMG Kompressor	M112.961	02/01 ⇨ 08/07
CLASSE C II C 320	M112.946	05/00 ⇨ 05/08
CLASSE C II C 320 4-matic	M112.953	07/02 ⇨ 08/07
CLASSE C II C 55 AMG	M113.988	02/04 ⇨ 08/07
CLASSE CLK I 320	M112.940	06/97 ⇨ 06/02
CLASSE CLK I 430	M113.943	07/98 ⇨ 06/02
CLASSE CLK I 55 AMG	M113.984	01/00 ⇨ 12/03
CLASSE CLK II 240	M112.912	06/02 ⇨ 05/09
CLASSE CLK II 320	M112.955	06/02 ⇨ 05/09
CLASSE CLK II 500	M113.968	06/02 ⇨ 05/09
CLASSE CLK II 55 AMG	M113.987	09/02 ⇨ 05/09
CLASSE CLK II CLK 240	M112.912	02/03 ⇨ 03/10
CLASSE CLK II CLK 320	M112.955	02/03 ⇨ 03/10
CLASSE CLK II CLK 500	M113.968	02/03 ⇨ 03/10

MERCEDES-BENZ		
CLASSE CLK II CLK 55 AMG	M113.987	06/02 ⇨ 03/10
CLASSE CLS I CLS 500	M113.967	10/04 ⇨ 12/10
CLASSE CLS I CLS 55 AMG	M113.990	01/05 ⇨ 12/10
CLASSE E II E 240	M112.911, M112.914	08/00 ⇨ 03/02
CLASSE E II E 240 T	M112.911, M112.914	08/00 ⇨ 03/03
CLASSE E II E 280	M112.921	12/96 ⇨ 03/02
CLASSE E II E 280 4-matic	M112.921	12/96 ⇨ 03/02
CLASSE E II E 280 T	M112.921	12/96 ⇨ 03/03
CLASSE E II E 280 T 4-matic	M112.921	12/96 ⇨ 03/03
CLASSE E II E 320	M112.941	06/97 ⇨ 03/02
CLASSE E II E 320 4-matic	M112.941	06/97 ⇨ 03/02
CLASSE E II E 320 T	M112.941	12/96 ⇨ 03/03
CLASSE E II E 320 T 4-matic	M112.941	12/96 ⇨ 03/03
CLASSE E II E 430	M113.940	06/97 ⇨ 03/02
CLASSE E II E 430 4-matic	M113.940	05/99 ⇨ 03/02
CLASSE E II E 430 T	M113.940	06/97 ⇨ 03/03
CLASSE E II E 430 T 4-matic	M113.940	05/99 ⇨ 03/03
CLASSE E II E 55 AMG	M113.980	08/97 ⇨ 03/02
CLASSE E II E 55 T AMG	M113.980	08/97 ⇨ 03/03
CLASSE E III E 240	M112.913	03/02 ⇨ 12/08
CLASSE E III E 240 4-matic	M112.917	03/03 ⇨ 12/08
CLASSE E III E 240 T	M112.913	03/03 ⇨ 07/09
CLASSE E III E 240 T 4-matic	M112.917	07/03 ⇨ 07/09
CLASSE E III E 320	M112.949	03/02 ⇨ 12/08
CLASSE E III E 320 4-matic	M112.954	03/03 ⇨ 12/08
CLASSE E III E 320 T	M112.949	03/03 ⇨ 07/09
CLASSE E III E 320 T 4-matic	M112.954	07/03 ⇨ 07/09
CLASSE E III E 500	M113.967	03/02 ⇨ 12/08
CLASSE E III E 500 4-matic	M113.969	10/03 ⇨ 12/08
CLASSE E III E 500 T	M113.967	10/03 ⇨ 07/09
CLASSE E III E 500 T 4-matic	M113.969	10/03 ⇨ 07/09
CLASSE E III E 55 AMG Kompressor	M113.990	10/02 ⇨ 12/08
CLASSE E III E 55 T AMG Kompressor	M113.990	07/03 ⇨ 07/09
CLASSE E E 280	M112.921	07/99 ⇨ 11/02
CLASSE G II G 320	M112.945	06/97 ⇨ 11/97
CLASSE G II G 500	M113.962	04/98 ⇨
CLASSE G II G 55 AMG	M113.962, M113.982, M113.993	04/98 ⇨
CLASSE M I ML 320	M112.942	02/98 ⇨ 08/02
CLASSE M I ML 350	M112.970	08/02 ⇨ 06/05
CLASSE M I ML 430	M113.942	02/98 ⇨ 06/05
CLASSE M I ML 500	M113.965	09/01 ⇨ 06/05
CLASSE M I ML 55 AMG	M113.981	02/00 ⇨ 06/05
CLASSE M II ML 500 4-matic	M113.964	07/05 ⇨ 12/11
CLASSE R R 500 4-matic	M113.971	08/05 ⇨ 12/14
CLASSE S IV S 280	M112.922	10/98 ⇨ 08/05
CLASSE S IV S 320	M112.944	10/98 ⇨ 08/05
CLASSE S IV S 350	M112.972	09/02 ⇨ 08/05
CLASSE S IV S 350 4-matic	M112.975	06/03 ⇨ 08/05
CLASSE S IV S 430	M113.941	10/98 ⇨ 08/05
CLASSE S IV S 430 4-matic	M113.948	09/02 ⇨ 08/05
CLASSE S IV S 500	M113.960	10/98 ⇨ 08/05
CLASSE S IV S 500 4-matic	M113.966	09/02 ⇨ 08/05
CLASSE S IV S 55 AMG	M113.986	04/99 ⇨ 08/05
CLASSE S IV S 55 AMG Kompressor	M113.991	06/02 ⇨ 08/05
CLASSE SL IV 280	M112.923	05/98 ⇨ 10/01
CLASSE SL IV 320	M112.943	05/98 ⇨ 10/01
CLASSE SL IV 500	M113.961	05/98 ⇨ 10/01
CLASSE SL V 350	M112.973	03/03 ⇨ 01/12
CLASSE SL V 500	M113.963	10/01 ⇨ 01/12
CLASSE SL V 55 AMG	M113.992, M113.995	10/01 ⇨ 01/12
CLASSE SL V 55 AMG Kompressor	M113.992	06/02 ⇨ 01/12
CLASSE SLK I 32 AMG Kompressor	M112.960	03/01 ⇨ 04/04
CLASSE SLK I 320	M112.947	03/00 ⇨ 04/04
CLASSE SLK II 55 AMG	M113.989	06/04 ⇨ 12/11
SLR MCLAREN 5.4	M155.980	04/04 ⇨
SLR MCLAREN 5.4 722 Edition	M155.980	10/06 ⇨
SLR MCLAREN 5.5	M155.980	09/04 ⇨
SLR MCLAREN 5.5 SLR McLaren	M155.980	04/07 ⇨ 12/09
VIANO 3.2	M112.951	09/03 ⇨
VIANO 3.7	M112.976	06/04 ⇨
VITO II 119	M112.951	09/03 ⇨
VITO II 122	M112.951	09/03 ⇨
VITO II 123	M112.976	06/04 ⇨ 07/08
PUCH		
G-MODELL G 500	M113.962	12/97 ⇨ 11/00
G-MODELL G 55 AMG	M113.982	04/99 ⇨ 03/01

FACET 9.6319

07,5

COILS

Adatt./Suitable:

BOSCH
0 986 221 036

HITACHI
138712
2508712

NISSAN
22448-00QAD

RENAULT
82 00 025 256
82 00 084 401

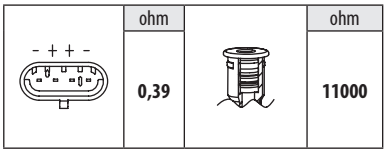

NISSAN		
KUBISTAR 1.2 16V	D4F712	04/06 ⇨
RENAULT		
CLIO II 1.0 16V	D4D700	01/01 ⇨
CLIO II 1.2 16V	D4F706, D4F712, D4F714	06/01 ⇨ 08/16
CLIO III 1.2 16V	D4F706	06/05 ⇨ 12/14
KANGOO 1.2	D4F712, D4F714	07/01 ⇨ 10/03
KANGOO I 1.0	D4D700, D4D720	01/02 ⇨ 01/07
KANGOO I 1.0 16V	59CH23N17, D4D700	03/98 ⇨
KANGOO I 1.2 16V	D4F712, D4F714, D4F716	06/01 ⇨
TWINGO I 1.0 16V	D4D712	01/01 ⇨
TWINGO I 1.2 16V	D4F702	01/01 ⇨ 06/07

FACET 9.6320

05,5

COILS

Adatt./Suitable:

BOSCH
0 986 221 066
0 986 22A 201

HITACHI
134066
134089
2504066
2504089

MAGNETI MARELLI
060717183012

MERCEDES-BENZ
A 000 150 15 80
A 000 150 25 80
A 000 150 29 80

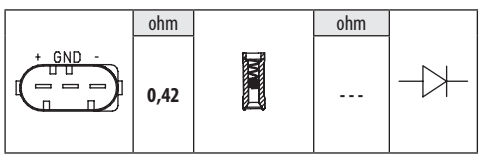

MERCEDES-BENZ		
CLASSE C II C 160 Kompressor	M271.921	05/02 ⇨ 05/08

MERCEDES-BENZ		
CLASSE C II C 180 Kompressor	M271.946	05/02 ⇨ 05/08
CLASSE C II C 200 CGI Kompressor	M271.942	03/03 ⇨ 05/08
CLASSE C II C 200 Kompressor	M271.940	05/02 ⇨ 05/08
CLASSE C II C 220	M271.948	05/02 ⇨ 05/08
CLASSE C II C 230 Kompressor	M271.948	05/02 ⇨ 05/08
CLASSE C III C 180	M271.820	06/11 ⇨
CLASSE C III C 180 CGI	M271.820, M271.952	01/07 ⇨ 08/14
CLASSE C III C 180 Kompressor	M271.820, M271.910, M271.952	01/07 ⇨ 08/14
CLASSE C III C 200	M271.820	05/11 ⇨ 01/14
CLASSE C III C 200 CGI	M271.820, M271.860, M271.950	01/07 ⇨
CLASSE C III C 200 Kompressor	M271.820, M271.860, M271.950	01/07 ⇨ 08/14
CLASSE C III C 250	M271.860	06/11 ⇨
CLASSE C III C 250 CGI	M271.860	07/09 ⇨ 08/14
CLASSE CLC CLC 160	M271.911, M271.921	02/09 ⇨ 06/11
CLASSE CLC CLC 180 Kompressor	M271.940, M271.946	05/08 ⇨ 06/11
CLASSE CLC CLC 200 Kompressor	M271.957	05/08 ⇨ 06/11
CLASSE CLK II 200 CGI	M271.942	07/03 ⇨ 05/09
CLASSE CLK II 200 Kompressor	M271.940, M271.955	09/02 ⇨ 05/09
CLASSE CLK II CLK 200 CGI	M271.942	07/03 ⇨ 03/10
CLASSE CLK II CLK 200 Kompressor	M271.940, M271.955	02/03 ⇨ 03/10
CLASSE E III E 200 Kompressor	M271.941, M271.956	11/02 ⇨ 07/09
CLASSE E III E 200 NGT	M271.941, M271941NGT	03/04 ⇨ 12/08
CLASSE E III E 200 T Kompressor	M271.941	03/03 ⇨ 07/09
CLASSE E IV E 200 CGI	M271.820, M271.860	08/09 ⇨ 12/16
CLASSE E IV E 200 NGT	M271.958, M271958NGT	03/11 ⇨ 12/15
CLASSE E IV E 250 CGI	M271.860	01/09 ⇨ 12/16
SPRINTER II 216	M271.951	09/08 ⇨
SPRINTER II 316	M271.951	09/08 ⇨
SPRINTER II 316 LGT	271951	09/08 ⇨
SPRINTER II 316 NGT	M271.951, M271951NGT	09/08 ⇨
SPRINTER II 516	M271.951	09/08 ⇨
SPRINTER II 516 NGT	M271.951, M271951NGT	09/08 ⇨
CLASSE SLK II 200 Kompressor	M271.944, M271.954	03/04 ⇨ 02/11
CLASSE SLK III 200	M271.861	02/11 ⇨
CLASSE SLK III 250	M271.861	02/11 ⇨

FACET 9.6322 — 07

COILS

Adatt./Suitable:

[03] **Supplied until depletion**
- Fornibile fino ad esaurimento delle scorte
- Fourni jusqu'à épuisement du stock
- Lieferbar solange vorrat reicht
- Suministrado hasta el stock termina

[250] **incl. spark plug connector**
- con cappuccio candela accensione
- Cosse de bougie d'allumage comprise
- inkl. Zündkerzenstecker
- incl. conector bujías

[302] **Paired article numbers**
- N° articolo appaiato
- Numéro d'article en paire
- paarige Artikelnummer
- Referencia artículo par

9.6254S

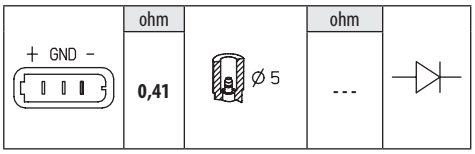

AUDI		
A6 I S6 Plus quattro	AHK	04/96 ⇨ 12/97
A8 I 3.7	AKJ	06/97 ⇨ 12/98
A8 I 4.2 quattro	AGH	07/95 ⇨ 09/98

FACET 9.6323 — 09

COILS

Adatt./Suitable:

ALFA ROMEO
55200112
55208723

BOSCH
0 986 221 065

CHAMPION
BAE 940 A

CHRYSLER
55208723

FIAT
55200112
55200486
55208723

FORD
1 535 713
1 671 690
9S51-12029-AA
9S51-12029-AB

HITACHI
138727
138769
2508727
2508769

LANCIA
55200112
55208723

MAGNETI MARELLI
060717135012
060794001010
BAE 940 A

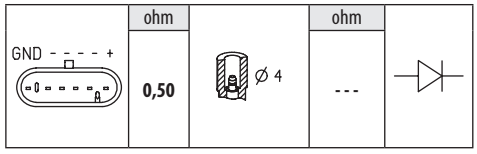

ALFA ROMEO		
MITO 1.4	350A1.000, 955A9.000	03/11 ⇨ 10/18
CHRYSLER		
YPSILON 1.2	169A4.000	05/11 ⇨
FIAT		
500 1.2	169A4.000	07/07 ⇨
500 1.2 LPG	169A4.000	12/10 ⇨
500 C 1.2	169A4.000	09/09 ⇨
PUNTO III EVO 1.2	169A4.000, 199A4.000	10/09 ⇨ 02/12
PUNTO III EVO 1.4	199A7000, 350A1.000	03/09 ⇨
PUNTO III EVO 1.4 LPG	350A1.000	06/09 ⇨ 02/12
PUNTO III EVO 1.4 Natural Power	350A1.000, 350A1000CNG	10/09 ⇨ 02/12
500 MY12 1.2	--	01/12 ⇨
PUNTO III 1.2	169A4.000, 199B9.000	03/12 ⇨
PUNTO III 1.4	199A7000, 350A1.000	03/12 ⇨
PUNTO III 1.4 Bifuel	350A1.000	03/12 ⇨
PUNTO III 1.4 Natural Power	350A1.000, 350A1000CNG	03/09 ⇨
FIORINO III 1.4	350A1.000	10/09 ⇨
FIORINO III 1.4 CNG	350A1000CNG	06/08 ⇨
FIORINO III 1.4 Natural Power	350A1.000, 350A1000CNG	06/08 ⇨
DOBLO I 1.4	350A1.000	10/05 ⇨
GRANDE PUNTO 1.4	350A1.000	02/06 ⇨ 06/13
GRANDE PUNTO 1.4 LPG	350A1.000	03/09 ⇨ 12/12
GRANDE PUNTO 1.4 Natural Power	350A1000CNG	03/09 ⇨ 12/12
PANDA III 1.2	169A4.000	02/12 ⇨
PANDA III 1.2 LPG	169A4.000	06/12 ⇨
IDEA 1.4	350A1.000	10/05 ⇨
IDEA 1.4 LPG	350A1.000	03/09 ⇨
LINEA 1.4	350A1.000	06/07 ⇨
PALIO 1.4	350A1.000, 834A1.000	10/02 ⇨
PANDA II 1.2	169A4.000	03/10 ⇨
PANDA II 1.2 4x4	169A4.000	04/10 ⇨
PANDA II 1.2 Euro 5	--	04/09 ⇨
PANDA II 1.2 LPG	169A4.000	09/10 ⇨
PANDA II 1.2 Natural Power	188A4000CNG	01/07 ⇨ 11/09
PANDA II 1.4 16V	--	01/10 ⇨
PANDA II 1.4 Natural Power	350A1.000, 350A1000CNG	10/09 ⇨

FIAT		
PUNTO III / GRANDE PUNTO 1.2	169A4.000, 199A4.000	10/05 ⇨
PUNTO III / GRANDE PUNTO 1.2 [IND]	--	01/08 ⇨
PUNTO III / GRANDE PUNTO 1.2 Actual	--	09/09 ⇨
PUNTO III / GRANDE PUNTO 1.2 LPG	199A4.000	06/08 ⇨ 12/12
PUNTO III / GRANDE PUNTO 1.4	199A7000, 350A1.000	06/05 ⇨ 12/15
PUNTO III / GRANDE PUNTO 1.4 Actual	--	09/09 ⇨
PUNTO III / GRANDE PUNTO 1.4 LPG	350A1.000	12/08 ⇨
PUNTO III / GRANDE PUNTO 1.4 Natural Power	350A1.000, 350A1000CNG	07/08 ⇨
QUBO 1.4	350A1.000	10/09 ⇨
QUBO 1.4 Natural Power	350A1.000, 350A1000CNG	10/09 ⇨
500 MY15 1.2	--	01/15 ⇨
500 MY15 1.2 LPG	--	01/15 ⇨
SIENA 1.4	--	01/02 ⇨
FORD		
KA II 1.2	169A4000, FP4	10/08 ⇨ 05/16
LANCIA		
MUSA 1.4	350A1.000	09/05 ⇨ 09/12
MUSA 1.4 8V	--	01/11 ⇨ 12/12
MUSA 1.4 LPG	350A1.000	11/10 ⇨ 09/12
YPSILON II 1.2	169A4.000, 188A4.000	10/03 ⇨ 12/11
YPSILON II 1.4	350A1.000	02/06 ⇨ 12/11
YPSILON II 1.4 LPG	350A1.000	11/10 ⇨ 12/11
YPSILON III 1.2	169A4.000	05/11 ⇨
YPSILON III 1.2 Bi-fuel	169A4.000	05/11 ⇨

FACET 9.6325 — 05,5

COILS

Adatt./Suitable:

BOSCH
0 986 221 054

VW
077 905 115 AA
077 905 115 G
077 905 115 J
077 905 115 M
077 905 115 R
077 905 115 S

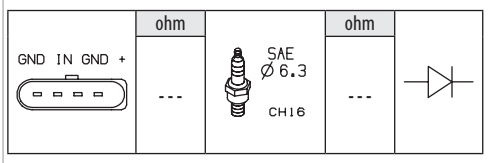

VW		
PHAETON 4.2 V8 4motion	BGH, BGJ	05/03 ⇨ 03/16
TOUAREG I 4.2 V8	AXQ	12/02 ⇨ 11/06

FACET **9.6326**

05,5

COILS

Adatt./Suitable:

AUDI
06F 905 115 C
06F 905 115 E
06F 905 115 F
06H 905 115
06H 905 115 A
06H 905 115 B
07K 905 715 A
07K 905 715 C
07K 905 715 D
07K 905 715 F
07K 905 715 G

BOSCH
0 221 604 115
0 221 604 116

HITACHI
133836
2503836

MAGNETI MARELLI
060717108012
060810196010

SEAT
06F 905 115 A
06F 905 115 B
06F 905 115 C
06F 905 115 E
06F 905 115 F
06H 905 115
06H 905 115 A
06H 905 115 B
07K 905 715
07K 905 715 A
07K 905 715 B
07K 905 715 C
07K 905 715 D
07K 905 715 F
07K 905 715 G

SKODA
06F 905 115 C
06F 905 115 F
06H 905 115
06H 905 115 A
06H 905 115 B
07K 905 715 A
07K 905 715 B
07K 905 715 C
07K 905 715 D
07K 905 715 F
07K 905 715 G

VW
06F 905 115
06F 905 115 A
06F 905 115 B
06F 905 115 C
06F 905 115 E
06F 905 115 F
06H 905 115
06H 905 115 A
06H 905 115 B
07K 905 715
07K 905 715 A
07K 905 715 B
07K 905 715 C
07K 905 715 D
07K 905 715 E
07K 905 715 F
07K 905 715 G

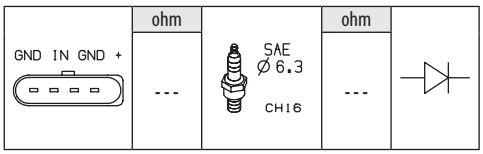

AUDI		
A1 2.0 TFSI quattro	CDLH	03/12 ⇨ 11/12
A4 IV 1.8 TFSI	CABA, CABB, CDHA, CDHB	11/07 ⇨ 12/15
A4 IV 1.8 TFSI quattro	CDHB	09/08 ⇨ 03/12
A4 IV 2.0 TFSI	CAEA, CAEB, CAED, CDNB, CDNC, CFKA	06/08 ⇨ 12/15
A4 IV 2.0 TFSI flexible fuel	CFKA	11/09 ⇨ 12/15
A4 IV 2.0 TFSI flexible fuel quattro	CFKA	11/09 ⇨ 12/15
A4 IV 2.0 TFSI quattro	CAEB, CAED, CDNC, CFKA, CPMA, CPMB	06/08 ⇨ 12/15
A4 IV RS4 quattro	CFSA	05/12 ⇨ 08/15
A3 II 1.8 TFSI	BYT, BZB, CDAA	11/06 ⇨ 05/13
A3 II 1.8 TFSI quattro	CDAA	07/08 ⇨ 03/13
A3 II 2.0 FSI	AXW, BLR, BLX, BLY, BMB, BVY, BVZ	05/03 ⇨ 06/08
A3 II 2.0 TFSI	AXX, BPY, BWA, CAWB, CBFA, CCZA	09/04 ⇨ 05/13
A3 II 2.0 TFSI quattro	AXX, BPY, BWA, CCTA, CCZA	09/04 ⇨ 03/13

AUDI		
A3 II RS3 quattro	CEPA	01/11 ⇨ 12/12
A3 II S3 quattro	BHZ, BZC, CDLA, CDLC	11/06 ⇨ 03/13
A3 III RS3 quattro	CZGB	03/15 ⇨
A4 III 2.0 TFSI	BGB, BPG, BPJ, BUL, BWE, BWT, BYK	11/04 ⇨ 06/08
A4 III 2.0 TFSI 16V	BWE, BWT	01/06 ⇨ 03/09
A4 III 2.0 TFSI quattro	BGB, BUL, BWE, BWT	11/04 ⇨ 03/09
A4 III RS4 quattro	BNS	09/05 ⇨ 12/08
A5 I 1.8 TFSI	CABD, CDHB	10/07 ⇨ 01/17
A5 I 2.0 TFSI	CAEA, CAEB, CAED, CDNB, CDNC	06/08 ⇨ 12/14
A5 I 2.0 TFSI quattro	CAEB, CAED, CDNC, CPMA, CPMB	06/08 ⇨ 01/17
A5 I RS5 quattro	CFSA	03/10 ⇨ 01/17
A4 IV ALLROAD 2.0 TFSI quattro	CDNC, CPMA, CPMB	04/09 ⇨ 05/16
A6 III 2.0 TFSI	BPJ, BYK	06/05 ⇨ 08/11
A6 IV 2.0 TFSI	CAEB, CAED, CDNB	03/11 ⇨
A6 IV 2.0 TFSI hybrid	CHJA	11/11 ⇨ 09/18
A6 IV 2.0 TFSI quattro	CAEB	05/12 ⇨ 05/13
A8 III 2.0 TFSI hybrid	CHJA	02/12 ⇨ 11/15
Q3 2.0 TFSI	CCTA	10/13 ⇨
Q3 2.0 TFSI quattro	CCTA, CCZC, CPSA	06/11 ⇨ 10/18
Q3 RS 2.5 quattro	CTSA, CZGA	05/13 ⇨ 10/18
Q3 RS performance 2.5 quattro	CZGB	01/15 ⇨ 10/18
Q5 I 2.0 Hybrid quattro	CHJA	09/12 ⇨ 05/16
Q5 I 2.0 TFSI	CDNA	11/08 ⇨
Q5 I 2.0 TFSI Hybrid quattro	CHJA	06/11 ⇨ 06/16
Q5 I 2.0 TFSI quattro	CAEB, CDNB, CDNC, CPMA, CPMB	11/08 ⇨ 05/17
Q5 I 2.0 TFSI quattro [CHN]	CADA	09/09 ⇨
R8 5.2 FSI quattro	CMPA	11/10 ⇨ 07/15
TT II 1.8 TFSI	CDAA	06/08 ⇨ 06/14
TT II 2.0 TFSI	BPY, BWA, CCTA, CESA	08/06 ⇨ 06/14
TT II 2.0 TFSI quattro	BWA, CCZA, CESA, CETA	06/08 ⇨ 06/14
TT II 2.0 TTS quattro	CDLA, CDLB, CDMA	05/08 ⇨ 06/14
TT II 2.5 RS quattro	CEPA, CEPB	07/09 ⇨ 06/14

SEAT		
ALTEA 1.8 TFSI	BYT, BZB, CDAA	01/07 ⇨
ALTEA 2.0 FSI	BLR, BLY, BVY, BVZ	05/04 ⇨ 03/09
ALTEA 2.0 TFSI	BWA	04/06 ⇨ 05/09
ALTEA XL 1.8 TFSI	BYT, BZB, CDAA	01/07 ⇨
ALTEA XL 2.0 FSI	BVY, BVZ	10/06 ⇨ 03/09
ALTEA XL 2.0 TFSI	BWA, CCZB	10/06 ⇨
ALTEA XL 2.0 TFSI 4x4	BWA, CCZB	06/07 ⇨
EXEO 1.8 TSI	CDHA, CDHB	05/10 ⇨ 05/13
EXEO 2.0 TFSI	BWE, CDND	03/09 ⇨ 05/13
ALHAMBRA III 1.8 TSI	CDAA	11/12 ⇨
ALHAMBRA III 2.0 TFSI	CCZA	11/10 ⇨ 05/12
LEON II 1.8 TSI	BZB, CDAA	06/07 ⇨ 12/12
LEON II 2.0 Cupra R	CDLA	09/09 ⇨ 12/12
LEON II 2.0 FSI	BLR, BLY, BVY, BVZ	07/05 ⇨ 05/10
LEON II 2.0 TFSI	BWA, BWJ, CDLD	05/05 ⇨ 05/11
TOLEDO III 1.8 TFSI	BYT, BZB, CDAA	01/07 ⇨ 05/09
TOLEDO III 2.0 FSI	BLR, BLY, BVY, BVZ	10/04 ⇨ 05/09
TOLEDO III 2.0 TFSI	BWA	11/05 ⇨ 05/09

SKODA		
OCTAVIA II 1.8 TSI	BZB, CDAA, CDAB	06/07 ⇨ 06/13
OCTAVIA II 1.8 TSI 4x4	CDAA, CDAB	11/08 ⇨ 02/13
OCTAVIA II 2.0 4x4	CCZA	11/08 ⇨
OCTAVIA II 2.0 FSI	BLR, BLY, BVY, BVZ	11/04 ⇨ 10/08
OCTAVIA II 2.0 FSI 4x4	BLX, BLY, BVX	11/04 ⇨ 04/09
OCTAVIA II 2.0 TFSI	BWA, CCZA	10/05 ⇨ 02/13
SUPERB II 1.8 TSI	BZB, CDAA, CDAB	03/08 ⇨ 05/15
SUPERB II 1.8 TSI 4x4	CDAA, CDAB	11/08 ⇨ 05/15
SUPERB II 2.0 TFSI	CCZA	05/10 ⇨ 05/15
YETI 1.2 TSI	CBZB	09/09 ⇨ 05/15
YETI 1.8	CDAB	02/11 ⇨
YETI 1.8 TSI 4x4	CDAA, CDAB	05/09 ⇨ 12/17

VW		
AMAROK 2.0 TSI	CFPA	12/10 ⇨ 10/16
GOLF VI 1.8 TSI	CDAA	06/09 ⇨ 01/11
GOLF VI 2.0	CDLF	05/11 ⇨
GOLF VI 2.0 GTi	CBFA, CCTA, CCZB, CDLG	02/09 ⇨ 05/16
GOLF VI 2.0 R	CDLA	01/13 ⇨ 05/16
GOLF VI 2.0 R 4motion	CDLC, CDLF	11/09 ⇨ 11/13
GOLF VI 2.0 TFSI	CCZA	07/09 ⇨
GOLF VI 2.0 TFSi Gti	CBFA, CCTA, CCZB, CDLG	05/11 ⇨
GOLF VI 2.0 TSI	CDLC	01/13 ⇨
GOLF VI 2.0 TSi R 4motion	CDLF	11/09 ⇨ 11/12
GOLF VI 2.5	CBTA, CBUA	07/09 ⇨
BEETLE 2.0 TFSI	CBFA, CCTA, CCZA	04/11 ⇨ 07/16
BEETLE 2.5	CBTA, CBUA, CCCA	04/11 ⇨ 07/19
GOLF V 2.0 FSI	AXW, BLR, BLX, BLY, BVX, BVY, BVZ	01/04 ⇨ 11/08
GOLF V 2.0 FSI 4motion	BLX, BVX	08/04 ⇨ 11/08
GOLF V 2.0 GTI	AXX, BPY, BWA, BYD, CAWB, CBFA	10/04 ⇨ 02/09
GOLF V 2.0 TFSI	BWA, CAWB	06/07 ⇨ 07/09

VW		
GOLF V 2.5	CBTA, CBUA	05/07 ⇨ 11/08
CALIFORNIA 2.0 TSI	CJKA, CJKB	05/11 ⇨ 07/19
CALIFORNIA 2.0 TSI 4motion	CJKA	07/11 ⇨ 07/19
CAMPMOBILE 2.0 TSi	CJKA, CJKB	05/11 ⇨ 08/15
CAMPMOBILE 2.0 TSi BlueMotion	CJKA, CJKB	04/15 ⇨ 07/19
CC 1.8 TSI	CDAA, CDAB	11/11 ⇨ 12/16
CC 2.0 TFSI	CBFA, CCTA	11/11 ⇨ 12/16
CC 2.0 TSI	CBFA, CCTA, CCZB	11/11 ⇨
EOS 2.0 FSI	BVY, BVZ	03/06 ⇨ 05/08
EOS 2.0 TFSI	BPY, BWA, CAWB, CBFA, CCTA, CCZA	03/06 ⇨ 08/15
EOS 2.0 TSI	CCZB	11/09 ⇨ 08/15
JETTA V 2.0 FSI	BLR, BLY, BVY, BVZ	08/05 ⇨ 10/10
JETTA V 2.0 TFSI	BPY, BWA, CAWB, CBFA, CCTA, CCZA	10/05 ⇨ 10/10
JETTA V 2.5	BGP, BGQ, BTK, CBTA, CCCA	01/05 ⇨
PASSAT V 1.8 TSI	BZB, CDAA, CDAB, CGYA	05/07 ⇨ 12/14
PASSAT V 2.0 FSI	BLR, BLY, BVY, BVZ, CCTB	03/05 ⇨ 11/10
PASSAT V 2.0 FSI 4motion	BLX, BLY, BVX	09/05 ⇨ 11/10
PASSAT V 2.0 TFSI	AXX, BPY, BWA, CAWB	07/05 ⇨ 11/10
PASSAT V 2.0 TSI	CCZB	11/10 ⇨ 12/15
PASSAT V 2.0 TSI 4motion	CCZB	01/12 ⇨ 12/14
PASSAT V 2.5 SRE	CBTA, CBUA, CCCA	01/11 ⇨
JETTA VI 2.0 TFSI	CBFA, CCTA, CCZA	12/10 ⇨
JETTA VI 2.5	CBTA, CBUA, CCCA	04/10 ⇨
MULTIVAN 2.0 TSI	CJKA, CJKB	05/11 ⇨ 07/19
MULTIVAN 2.0 TSI 4motion	CJKA	07/11 ⇨ 07/19
NEW BEETLE 2.5	BPR, BPS	07/05 ⇨ 09/10
POLO V 2.0 R WRC	CDLJ	08/13 ⇨ 05/14
PASSAT 1.8 TFSi	CDAA	08/10 ⇨ 12/14
PASSAT 2.0 TFSI	CCZB	11/10 ⇨ 12/14
SCIROCCO III 2.0 R	CDLA, CDLC, CDLK	11/09 ⇨ 11/17
SCIROCCO III 2.0 TFSI	CAWB	05/08 ⇨ 05/14
SCIROCCO III 2.0 TSI	CCZB	11/09 ⇨ 11/17
SHARAN II 1.8 TSI	CDAA	11/11 ⇨
SHARAN II 2.0 TFSI	CCZA	12/10 ⇨ 11/15
SHARAN II 2.0 TSI	CCZA	12/10 ⇨ 11/15
PASSAT CC 1.8 TSI	BZB, CDAA, CDAB, CGYA	06/08 ⇨ 01/12
PASSAT CC 2.0 TFSI	CAWB, CBFA, CCTA, CCZA	06/08 ⇨ 01/12
PASSAT CC 2.0 TSI	CCZB	11/10 ⇨ 01/12
TIGUAN I 2.0 TFSI	CAWB, CCTA, CCTB	11/07 ⇨
TIGUAN I 2.0 TFSI 4motion	CAWA, CAWB, CCTA, CCTB, CCZA, CCZC	09/07 ⇨ 07/18
TIGUAN I 2.0 TSI 4motion	CCZA, CCZB, CCZC, CCZD	11/09 ⇨ 07/18
TOUAREG I 4.2 V8 FSI	BAR	06/06 ⇨ 05/10
TOURAN I 2.0 FSI	AXW, BLR, BLX, BLY, BVY, BVZ	10/03 ⇨ 01/07
TRANSPORTER V 2.0 TSI	CJKA, CJKB	05/11 ⇨ 08/15
TRANSPORTER V 2.0 TSI 4motion	CJKA	07/11 ⇨ 08/15
TRANSPORTER VI 2.0 TSI	CJKA, CJKB	04/15 ⇨ 07/19
TRANSPORTER VI 2.0 TSI 4motion	CJKA	06/15 ⇨ 07/19

FACET 9.6327 — 05,5

COILS

Adatt./Suitable:

AUDI
06D 905 115
06D 905 115 A
06D 905 115 C
06D 905 115 D
06D 905 115 F
06D 905 115 G
06D 905 115 J
06D 905 115 K
06E 905 115
06E 905 115 A
06E 905 115 B
06E 905 115 C
06E 905 115 D
06E 905 115 E
06E 905 115 F
06E 905 115 G
07L 905 115
07L 905 115 A
07L 905 115 B

BOSCH
0 221 604 800

HITACHI
133831
2503831
2503835

MAGNETI MARELLI
060717175012

PORSCHE
958 602 102 00

VW
06D 905 115
06D 905 115 A
06D 905 115 C
06D 905 115 D
06D 905 115 F
06D 905 115 G
06D 905 115 K
06E 905 115
06E 905 115 A
06E 905 115 B
06E 905 115 C
06E 905 115 D
06E 905 115 E
06E 905 115 F
06E 905 115 G

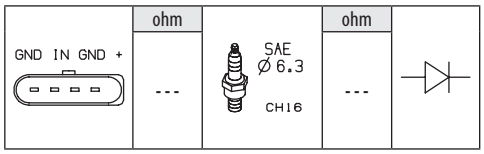

AUDI		
A4 IV 3.0 TFSI quattro	CMUA, CRED	02/12 ⇨ 12/15
A4 IV 3.2 FSI	CALA	09/08 ⇨ 03/12
A4 IV 3.2 FSI quattro	CALA	11/07 ⇨ 03/12
A4 IV S4 quattro	CAKA, CCBA, CGWC, CGXC, CREC, CTUB	11/08 ⇨ 12/15
A4 II 2.0 FSI	AWA	07/02 ⇨ 12/04
A4 III 3.2 FSI	AUK	01/05 ⇨ 03/09
A4 III 3.2 FSI quattro	AUK, BKH	01/05 ⇨ 03/09
A5 I 3.0 TFSI quattro	CHMB, CMUA, CRED	08/11 ⇨
A5 I 3.2 FSI	CALA	06/07 ⇨ 03/12
A5 I 3.2 FSI quattro	CALA	06/07 ⇨ 03/12
A5 I S5 quattro	CAKA, CAUA, CCBA, CGWC, CGXC, CREC, CTDA, CTUB	06/07 ⇨ 01/17
A6 III 2.4	BDW	05/04 ⇨ 10/08
A6 III 2.4 [CHN]	BDW	04/05 ⇨
A6 III 2.4 quattro	BDW	01/05 ⇨ 10/08
A6 III 2.8 FSI	BDX, CCDA, CCEA	11/06 ⇨ 08/11
A6 III 2.8 FSI quattro	BDX, CCDA, CCEA	06/07 ⇨ 08/11
A6 III 3.0 TFSI quattro	CAJA, CCAA	10/08 ⇨ 08/11
A6 III 3.2 FSI	AUK, BKH, CALA	05/04 ⇨ 03/11
A6 III 3.2 FSI quattro	AUK, BKH, BYU	05/04 ⇨ 10/08
A6 III 4.2 FSI quattro	BVJ	05/06 ⇨ 08/11
A6 III RS6 quattro	BUH	04/08 ⇨ 08/10
A6 III S6 quattro	BXA	03/06 ⇨ 08/11
A6 IV 2.8 FSI	CHVA	11/10 ⇨ 04/15
A6 IV 2.8 FSI quattro	CHVA, CVPA	11/10 ⇨ 09/18
A6 IV 3.0 TFSI	CREH	09/14 ⇨
A6 IV 3.0 TFSI quattro	CGWB, CGWD, CGXB, CREC, CREH, CTUA	11/10 ⇨ 09/18
A7 SPORTBACK 2.0 TFSI quattro	CYNB	05/15 ⇨ 05/18
A7 SPORTBACK 2.5 FSI	CLXB	05/12 ⇨
A7 SPORTBACK 2.8 FSI	CHVA	02/11 ⇨ 03/15
A7 SPORTBACK 2.8 FSI quattro	CHVA, CNYA, CVPA	10/10 ⇨ 05/18
A7 SPORTBACK 2.8 TFSI	CVPA	09/14 ⇨
A7 SPORTBACK 3.0 TFSI	CREH	05/14 ⇨
A7 SPORTBACK 3.0 TFSI quattro	CGWB, CGWD, CGXB, CHMA, CREC, CTTA, CTUA	10/10 ⇨ 05/18
A8 II 2.8 FSI	BDX, CJBA	08/07 ⇨ 07/10
A8 II 3.2 FSI	BPK	06/05 ⇨ 07/10
A8 II 3.2 FSI quattro	BPK	06/05 ⇨ 07/10
A8 II 4.2 FSI quattro	BVJ	06/06 ⇨ 07/10
A8 II S8 quattro	BSM	06/06 ⇨ 07/10
Q7 II 3.0 TFSI quattro	CREC	01/15 ⇨ 12/19
A8 III 2.5 TFSI	CPAA, CVBA	07/12 ⇨ 06/16
A8 III 3.0 TDI quattro	CPNA, CPNB	11/12 ⇨ 06/16
A8 III 3.0 TFSI quattro	CGWA, CGWD, CGXC, CMDA, CREA, CREC, CREG, CTDA, CTUB	06/10 ⇨ 01/18
A8 III 4.2 FSI quattro	CDRA	11/09 ⇨ 12/12
Q5 I 3.0 TFSI quattro	CTUC, CTVA	06/12 ⇨ 05/17
Q5 I 3.2 FSI quattro	CALB	11/08 ⇨ 12/12
Q5 I SQ5 TFSI quattro	CTUD, CTXA	05/13 ⇨ 05/17
Q7 I 3.0 TFSI quattro	CJTB, CJTC, CJWB, CJWC, CJWE, CNAA, CTWA, CTWB	05/10 ⇨ 08/15
Q7 I 4.2 FSI quattro	BAR	03/06 ⇨ 05/10
Q7 I 4.2 quattro	BAR	03/06 ⇨ 12/10
R8 4.2 FSI quattro	BYH, CNDA	04/07 ⇨ 07/15
R8 5.2 FSI	CTPA, CTPB, DKAB, DKAC	07/12 ⇨
R8 5.2 FSI quattro	BUJ, CSPA, CSPB, CTPA, CTPB, CTYA, DKAA, DKAC, DMWA	04/09 ⇨
PORSCHE		
CAYENNE 3.0 S Plug-in Hybrid Supercharged	MCG.EA, MCG.FA	01/15 ⇨
CAYENNE II 3.0 S E-Hybrid	M06.EC, MCG.EA, MCG.FA	10/14 ⇨
PANAMERA 3.0 S E-Hybrid	MCG.EA, MCG.FA	03/11 ⇨ 10/16
VW		
TOUAREG I 4.2 V8	AXQ	12/02 ⇨ 11/06
TOUAREG I 4.2 V8 FSI	BAR	06/06 ⇨ 05/10
TOUAREG II 3.0 TFSI	CYJA	01/15 ⇨
TOUAREG II 3.0 V6 TSI	CJTA	08/10 ⇨ 03/18
TOUAREG II 3.0 V6 TSI Hybrid	CGEA, CGFA	04/10 ⇨ 03/18
TOUAREG II 4.2 V8 FSI	CGNA	01/11 ⇨ 03/18

FACET 9.6329 — 05,5

COILS

Adatt./Suitable:

AUDI
06A 905 115
06A 905 115 A
06A 905 115 B
06A 905 115 C
06A 905 115 D
06B 905 115 D
06B 905 115 G
06B 905 115 H
06B 905 115 J
06B 905 115 L
06B 905 115 M
06B 905 115 N
06B 905 115 P
06B 905 115 Q
06B 905 115 R
06B 905 115 S
06C 905 115 C

BOSCH
0 986 221 024

HITACHI
133806
2503806

MAGNETI MARELLI
060717053012

SEAT
06A 905 115
06A 905 115 A
06A 905 115 B
06A 905 115 C
06A 905 115 D
06B 905 115 D
06B 905 115 G
06B 905 115 H
06B 905 115 J
06B 905 115 L
06B 905 115 M
06B 905 115 N
06B 905 115 P
06B 905 115 Q
06B 905 115 R
06C 905 115 C

SKODA
06A 905 115
06A 905 115 A
06A 905 115 B
06A 905 115 C
06A 905 115 D
06B 905 115 D
06B 905 115 G
06B 905 115 H
06B 905 115 J
06B 905 115 L
06B 905 115 M
06B 905 115 N
06B 905 115 P
06B 905 115 Q
06B 905 115 R
06C 905 115 C

VW
06A 905 115
06A 905 115 A
06A 905 115 B
06A 905 115 C
06A 905 115 D
06B 905 115 D
06B 905 115 G
06B 905 115 H
06B 905 115 J
06B 905 115 L
06B 905 115 M
06B 905 115 N
06B 905 115 P
06B 905 115 Q
06B 905 115 R
06B 905 115 S
06C 905 115 C

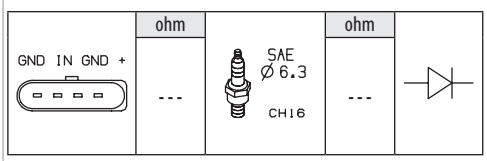

AUDI		
A3 I 1.8 T	AGU, ARY, AUM, AUQ	12/96 ⇨ 05/03
A3 I 1.8 T quattro	ARX, ARY	12/96 ⇨ 05/03
A3 I S3 quattro	AMK, APY, AUL, BAM	10/01 ⇨ 05/03
A4 II 1.8 T	AMB, AVJ, BEX, BFB	11/00 ⇨ 12/04
A4 II 1.8 T quattro	AMB, AVJ, BEX, BFB	11/00 ⇨ 12/04
A4 III 1.8 T	BFB	07/02 ⇨ 03/09
A4 III 1.8 T quattro	BFB	05/03 ⇨ 06/08
A4 III 2.0	ALT	11/04 ⇨ 06/08
A4 I 1.8 T	AWT	01/95 ⇨ 09/01
A4 I 1.8 T quattro	AWT	01/95 ⇨ 11/00
A6 II 1.8 T	AWT	01/97 ⇨ 01/05
A6 II 1.8 T quattro	AWT	02/97 ⇨ 01/05

AUDI		
A6 II 2.7 T quattro	1457L77	08/01 ⇨ 01/05
ALLROAD 2.7 T quattro	1457L77, ARE	05/00 ⇨ 08/05
TT I 1.8 T	AJQ, APP, ATC, AUM, AUQ, BVP, BVR	01/01 ⇨ 06/06
TT I 1.8 T quattro	AJQ, APX, ARY, ATC, AUQ, BAM, BFV, BVR	02/00 ⇨ 06/06
SEAT		
EXEO 1.6	ALZ	03/09 ⇨ 09/10
EXEO 1.8 T	CFMA	12/08 ⇨ 05/10
IBIZA II 1.8 T 20V Cupra	AYP	07/00 ⇨ 02/02
IBIZA III 1.8 T Cupra R	BBU, BLZ	01/04 ⇨ 02/08
IBIZA III 1.8 T FR	BJX, BKV	12/03 ⇨ 05/08
LEON I 1.8 20V T	AUQ	11/99 ⇨ 06/06
LEON I 1.8 20V T 4	ARY	11/99 ⇨ 06/06
LEON I 1.8 T Cupra R	AMK, BAM	02/02 ⇨ 06/06
LEON I 1.8 Turbo 4x4	AMK	05/02 ⇨ 05/03
TOLEDO II 1.8 20VT	APP	09/00 ⇨ 07/04
SKODA		
SUPERB I 1.8 T	AWT	12/01 ⇨ 03/08
OCTAVIA I 1.8 T	ARZ	08/97 ⇨ 12/10
OCTAVIA I 1.8 T 4x4	ARX	05/01 ⇨ 05/06
OCTAVIA I RS 1.8 T	AUQ	05/01 ⇨ 01/06
VW		
BORA 1.8 T	AUM, AUQ	05/00 ⇨ 05/05
GOLF IV 1.8 T	AUM	08/97 ⇨ 06/06
GOLF IV 1.8 T GTI	AUQ	08/01 ⇨ 06/05
POLO IV 1.8 GTI	BJX	09/05 ⇨ 11/09
POLO IV 1.8 GTi Cup Edition	BBU	05/06 ⇨ 11/09
NEW BEETLE 1.8 T	AGU, APH, AVC, AWP, AWU, AWV, BKF, BNU	11/01 ⇨ 09/10
PASSAT IV 1.8 [CHN]	AWL, BGC., CED	06/01 ⇨
PASSAT IV 1.8 4motion	AWM	03/01 ⇨ 05/05
PASSAT IV 1.8 T	AWM	02/01 ⇨ 11/05
PASSAT IV 1.8 T 20V	AWL, AWT	11/00 ⇨ 05/05
PASSAT IV 1.8 T 4motion	AWM	11/03 ⇨ 05/05
PASSAT IV 2.0	ALT	11/01 ⇨ 05/05

FACET 9.6331

05,5

COILS

Adatt./Suitable:

BOSCH
0 986 221 047

HITACHI
133812
2503812

MAGNETI MARELLI
060717130012
060810167010

SEAT
03D 905 115 F
03D 905 115 G
03D 905 715 A

SKODA
03D 905 115
03D 905 115 A
03D 905 115 B
03D 905 115 C
03D 905 115 D
03D 905 115 E
03D 905 115 F
03D 905 115 G
03D 905 715 A

VW
03D 905 115
03D 905 115 A
03D 905 115 B
03D 905 115 C
03D 905 115 D
03D 905 115 E
03D 905 115 F
03D 905 115 G
03D 905 715 A

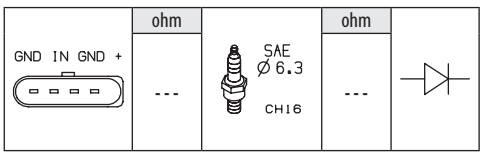

SEAT		
IBIZA III 1.2	BBM	06/07 ⇨ 05/08
SKODA		
FABIA I 1.2	AWY, BMD	07/01 ⇨ 12/07
FABIA II 1.2	BBM, CHFA	12/06 ⇨ 12/14
SKODA		
FABIA II 1.2 LPG	CHFA	03/09 ⇨ 11/11
VW		
FOX 1.2	BMD, CHFA, CHFB	04/05 ⇨ 12/11
POLO IV 1.2	AWY, BBM, BMD	01/02 ⇨ 11/09

FACET 9.6332

05,5

COILS

Adatt./Suitable:

BOSCH
0 986 221 001
0 986 221 045

DACIA
22 43 325 97R
22 43 335 29R
77 00 107 177
77 00 113 357
82 00 208 611
82 00 380 267
82 00 405 098
82 00 568 671
82 00 765 882

DENSO
029700-8240
029700-8291

GENERAL MOTORS
91 159 920
91 159 996
93 161 188
93 161 948

HITACHI
133800

LADA
82 00 765 882

MAGNETI MARELLI
060717035012
060810070010

NISSAN
22433-3529R
22448-00A0C
22448-00Q0A
22448-00Q0B
22448-00Q0C
22448-00Q0G
22448-00QAA
22448-00QAB
22448-00QAE
22448-00QAH
77001-07177
82006-72564

OPEL
44 08 283
44 08 389
44 13 233
44 32 202
91159996
93161188
93161948

RENAULT
22 43 325 97R
22 43 335 29R
77 00 107 177
77 00 113 357
77 00 113 357 A
77 00 875 000
82 00 035 420
82 00 154 186
82 00 154 186 A
82 00 208 611
82 00 380 267
82 00 405 098
82 00 568 671
82 00 672 564
82 00 765 882
89 00 568 671
H77 00 875 000

SAGEM
2 526 180 A
21595273-2

VAUXHALL
91159996
93161188
93161948

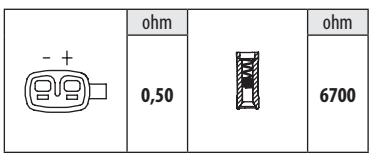

DACIA		
DUSTER 1.6	K4M642, K4M646, K4M694, K4M842, K4M884	04/10 ⇨
DUSTER 1.6 16V	K4M490, K4M606, K4M616, K4M694, K4M696, K4M842, K4M896	04/10 ⇨
DUSTER 1.6 16V 4x4	K4M490, K4M606, K4M646, K4M690	06/10 ⇨
DUSTER 1.6 16V Hi-Flex	K4M696	08/10 ⇨
DUSTER 1.6 16V LPG	K4M616, K4M642, K4M696	04/11 ⇨ 01/18
DUSTER 2.0	F4R400, F4R401, F4R402, F4R403, F4R404, F4R405, F4R408, F4R410, F4R412, F4R414, F4R416	04/10 ⇨
LODGY 1.6	K4M845	03/12 ⇨
LOGAN I 1.6 16V	K4M690, K4M694, K4M696, K4M697, K4M698	12/05 ⇨
LOGAN I 1.6 16V Flexifuel	K4M696	07/10 ⇨
LOGAN I 1.6 16V Hi-Flex	K4M690, K4M696	11/09 ⇨
LOGAN II 1.6 16V	K4M842, K4M845	10/12 ⇨
LOGAN II 2.0	F4R412, F4R416	10/12 ⇨
SANDERO I 1.6 16V	K4M690, K4M694	07/11 ⇨
SANDERO I 1.6 16V Bifuel	K4M690, K4M696	01/11 ⇨
SANDERO II 1.6 16V	K4M842, K4M845	01/13 ⇨
SANDERO II 2.0	F4R416	10/12 ⇨
SANDERO II 2.0 LPG	F4R412	10/12 ⇨
LADA		
LARGUS 1.6	21129, K4M	03/12 ⇨
NISSAN		
ALMERA 1.6	K4M	11/12 ⇨
KUBISTAR 1.6 16V	K4M750, K4M752, K4M753, K4M753	08/03 ⇨
PRIMASTAR 2.0	F4R720, F4R722, F4R820, F4R726	03/01 ⇨
TERRANO III 1.6	K4M, K4M606, K4M690	09/13 ⇨
TERRANO III 1.6 4x4	K4M606, K4M690	03/14 ⇨
TERRANO III 2.0	F4R	09/13 ⇨
TERRANO III 2.0 4x4	F4R	03/14 ⇨
OPEL		
VIVARO A 2.0 16V	F4R720	08/01 ⇨ 07/06
VIVARO A 2.0 ECOTEC	F4R820	08/06 ⇨ 07/14
RENAULT		
AVANTIME 2.0 16V Turbo	F4R760, F4R761	11/01 ⇨ 05/03
CLIO II 1.4 16V	K4J700, K4J710, K4J711, K4J712, K4J713, K4J715	02/00 ⇨
CLIO II 1.6	K4M746	11/03 ⇨
CLIO II 1.6 16V	K4M708, K4M734, K4M740, K4M742, K4M743, K4M744, K4M745, K4M746, K4M748	09/98 ⇨
CLIO II 1.6 Hi-Flex	K4M748	01/05 ⇨ 02/10
CLIO II 1.6i	K4M736	11/04 ⇨
CLIO II 2.0 16V	F4R732	06/01 ⇨
CLIO III 1.4 16V	K4J780	06/05 ⇨ 12/12
CLIO III 1.6 16V	K4M800, K4M801, K4M804, K4M862	06/05 ⇨ 12/14
CLIO III 1.6 16V GT	K4M862	06/09 ⇨ 12/14
CLIO III 2.0 16V Sport	--, F4R830, F4R832	02/06 ⇨
MEGANE III 1.6 16V	K4M848, K4M858, K4M866	11/08 ⇨
MEGANE III 1.6 16V BiFuel	K4M858	11/08 ⇨
MEGANE III 1.6 16V Hi-Flex	K4M866	11/08 ⇨ 08/15
MEGANE III 1.6 BiFuel	K4M866	11/08 ⇨
MEGANE III 2.0 R.S.	F4R874	11/08 ⇨
MEGANE III 2.0 TCe	F4R872, F4R870, F4R874	11/08 ⇨
MEGANE III 2.0 TCe 220	F4R874	11/13 ⇨
KANGOO II 1.6	K4M830, K4M831	02/09 ⇨ 12/12
KANGOO II 1.6 16V	K4M830, K4M831, K4M834, K4M835, K4M836	02/08 ⇨
KANGOO II 1.6 16V FLEX	K4M834	02/08 ⇨
KANGOO II 1.6 16V LPG	K4M834, K4M835, K4M836	02/08 ⇨
CLIO 1.6	K4M734	07/00 ⇨ 10/03
DUSTER 1.6 16V	K4M616	02/12 ⇨
DUSTER 1.6 16V 4x4	K4M490, K4M606, K4M646, K4M690	06/11 ⇨ 05/15
DUSTER 2.0	F4R403, F4R405	02/12 ⇨
DUSTER 2.0 4x4	F4R400, F4R402, F4R410, F4R412, F4R401	10/11 ⇨
ESPACE III 2.0	F4R700, F4R701	09/01 ⇨ 10/02
ESPACE III 2.0 16V	F4R700, F4R701	10/98 ⇨ 10/02
ESPACE IV 2.0	F4R790, F4R792, F4R794, F4R795, F4R796, F4R797, F4R896, F4R897	11/02 ⇨
ESPACE IV 2.0 Turbo	F4R794, F4R795, F4R796, F4R797	11/02 ⇨
FLUENCE 1.6 16V	K4M838, K4M839	02/10 ⇨
FLUENCE 1.6 LPG 16V	K4M839	01/12 ⇨
GRAND SCÉNIC II 1.6	K4M761, K4M764, K4M782, K4M788, K4M812, K4M813	04/04 ⇨ 11/08
GRAND SCÉNIC II 1.6 Flex	K4M766	06/06 ⇨ 06/09
GRAND SCÉNIC II 2.0	F4R770, F4R771, F4R776	04/04 ⇨ 06/09
MEGANE II 1.4	K4J730, K4J732, K4J740	08/03 ⇨
MEGANE II 1.4 16V	K4J730, K4J732, K4J740	11/02 ⇨ 02/08
MEGANE II 1.6	K4M760, K4M761, K4M762, K4M768, K4M788, K4M812, K4M813, K4M680	08/03 ⇨

RENAULT		
MEGANE II 1.6 16V	K4M760, K4M761, K4M762, K4M764, K4M768, K4M812, K4M813, K4M856	11/02 ⇨
MEGANE II 1.6 16V Hi-Flex	K4M856	02/08 ⇨ 07/09
MEGANE II 1.6 Bifuel	K4M788	06/05 ⇨ 02/08
MEGANE II 1.6 Flex-Fuel	K4M856	01/07 ⇨ 02/08
MEGANE II 1.6 LPG 16V	K4M760	01/06 ⇨ 08/09
MEGANE II 2.0	F4R770, F4R771, F4R774	08/03 ⇨
MEGANE II 2.0 16V	F4R770, F4R771	11/02 ⇨ 02/08
MEGANE II 2.0 16V Turbo	F4R776	05/04 ⇨ 03/09
MEGANE II 2.0 Renault Sport	F4R774, F4Rt774	05/04 ⇨ 10/09
GRAND SCÉNIC III 1.6 16V	K4M858	02/09 ⇨
GRAND SCÉNIC III 1.6 16V Bifuel	K4M866	02/09 ⇨
GRAND SCÉNIC III 1.6 E85	K4M866	02/09 ⇨
KANGOO 1.6	K4M836	03/13 ⇨
KANGOO 1.6 BiFuel	K4M750	06/05 ⇨ 06/08
KANGOO 1.6 CNG	K4M830	10/07 ⇨
KANGOO I 1.6	K4M730	09/01 ⇨
KANGOO I 1.6 16V	K4M708, K4M730, K4M732, K4M750, K4M752, K4M753, K4M754	06/01 ⇨
KANGOO I 1.6 16V 4x4	K4M708, K4M750, K4M752, K4M753, K4M754	02/01 ⇨
KANGOO I 1.6 16V bivalent	K4M850CNG	06/05 ⇨
KANGOO I 1.6 Flex	K4M850	03/07 ⇨ 12/18
KAPTUR 2.0 4WD	F4R410	03/16 ⇨
LAGUNA I 1.6 16V	K4M720, K4M724	11/97 ⇨ 03/01
LAGUNA I 1.8 16V	F4P760	04/98 ⇨ 03/01
LAGUNA I 2.0	F4R780	09/99 ⇨ 02/01
LAGUNA I 2.0 16V	F4R780	09/99 ⇨ 03/01
LAGUNA II 1.6	K4M710	03/01 ⇨ 10/05
LAGUNA II 1.6 16V	K4M710, K4M714, K4M716	03/01 ⇨ 12/07
LAGUNA II 1.6 Bifuel	K4M714	06/05 ⇨ 12/07
LAGUNA II 1.6 LPG	K4M714	03/01 ⇨ 05/05
LAGUNA II 1.8 16V	F4P770, F4P771, F4P772, F4P773, F4P774, F4P775	03/01 ⇨
LAGUNA II 2.0 16V	F4R712, F4R713, F4R714, F4R715, F4R784, F4R786, F4R787, F4R886, F4R887	08/02 ⇨ 12/07
LAGUNA II 2.0 16V Turbo	F4R764, F4R765, F4R786, F4R787	01/03 ⇨ 08/05
LAGUNA III 1.6 16V	K4M824	10/07 ⇨ 12/15
LAGUNA III 2.0	F4R813	02/08 ⇨
LAGUNA III 2.0 16V Turbo	F4R811, F4R813	10/07 ⇨ 12/15
LAGUNA III 2.0 GT	F4R800, F4R802	03/08 ⇨ 12/15
LOGAN 1.6	K4M690, K4M694, K4M696, K4M697, K4M845	04/07 ⇨
LOGAN 1.6 16V	K4M694	12/05 ⇨
LOGAN/STEPWAY 1.6	K4M842, K4M845	04/14 ⇨
MEGANE 1.4	K4J714, K4J750	04/01 ⇨ 07/03
MEGANE 1.6	K4M701, K4M708, K4M709, K4M700	04/01 ⇨ 07/03
MEGANE 1.6 BiFuel	K4M704, K4M712	04/01 ⇨ 07/03
MEGANE 1.8	F4P722	04/01 ⇨ 07/03
MEGANE 2.0	F4R740, F4R746	08/95 ⇨ 02/99
MEGANE I 1.4 16V	K4J700, K4J710, K4J711, K4J712, K4J713, K4J714, K4J732, K4J750	03/99 ⇨ 08/03
MEGANE I 1.6 16V	K4M701, K4M704, K4M706, K4M708, K4M709, K4M710, K4M712, K4M714, K4M720, K4M724, K4M730, K4M734, K4M740, K4M742, K4M743, K4M744,	05/00 ⇨
MEGANE I 1.6 Bifuel	K4M712	03/99 ⇨ 09/00
MEGANE I 1.6 LPG	K4M704, K4M712	10/00 ⇨ 08/02
MEGANE I 1.8 16V	F4P720, F4P722, F4P760, F4P770, F4P771, F4P772, F4P774, F4P775	07/00 ⇨ 08/03
MEGANE I 2.0 16V	F4R276, F4R700, F4R701, F4R712, F4R713, F4R720, F4R730, F4R732, F4R736, F4R746, F4R760, F4R761, F4R762, F4R763, F4R767, F4R770,	05/00 ⇨
MEGANE I 2.0 RT	F4R740, F4R741, F4R746, F4R747	03/01 ⇨ 08/03
MEGANE SCÉNIC I 1.6 16V	K4M701, K4M704, K4M708, K4M700	04/98 ⇨ 10/99
MODUS / GRAND MODUS 1.4	K4J770, K4J780	12/04 ⇨
MODUS / GRAND MODUS 1.6	K4M790, K4M791, K4M792, K4M794, K4M800, K4M801	12/04 ⇨
SANDERO I 1.6	K4M697	12/07 ⇨
SANDERO II 1.6 16V	K4M842, K4M845	04/14 ⇨
SCÉNIC I 1.4 16V	K4J714, K4J750	09/99 ⇨ 08/03
SCÉNIC I 1.6	K4M701, K4M706, K4M707, K4M708, K4M709, K4M776, K4M700	03/01 ⇨ 09/03
SCÉNIC I 1.6 16V	K4M712	05/00 ⇨ 08/03
SCÉNIC I 1.6 BiFuel	K4M704, K4M712	03/01 ⇨ 08/03
SCÉNIC I 1.8 16V	F4P720, F4P722	01/01 ⇨ 08/03

RENAULT		
SCÉNIC I 1.8 4x4	F4P722	07/00 ⇨ 04/01
SCÉNIC I 2.0 16V	F4R740, F4R741, F4R744, F4R746, F4R747	07/00 ⇨ 08/03
SCÉNIC I 2.0 16V RX4	F4R744, F4R746	06/00 ⇨ 08/03
SCÉNIC II 1.4	K4J730, K4J740	06/03 ⇨ 11/08
SCÉNIC II 1.6	K4M761, K4M782, K4M788, K4M812, K4M813	06/03 ⇨ 11/08
SCÉNIC II 1.6 16V	K4M764, K4M766, K4M812, K4M813	05/03 ⇨
SCÉNIC II 1.6 BiFuel	K4M764	08/03 ⇨ 05/06
SCÉNIC II 1.6 Hi-Flex	K4M766	03/05 ⇨ 07/10
SCÉNIC II 2.0	F4R770, F4R771	06/03 ⇨ 07/10
SCÉNIC II 2.0 16V Turbo	F4R776	05/04 ⇨ 11/08
SCÉNIC III 1.6 16V	K4M858	02/09 ⇨
SCÉNIC III 1.6 16V Bifuel	K4M866	02/09 ⇨
SCÉNIC III 1.6 E85	K4M866	02/09 ⇨
SCÉNIC 1.6 VVT	K4M858	01/13 ⇨
THALIA I 1.4 16V	K4J713	08/00 ⇨
THALIA I 1.6	K4M670, K4M674, K4M744, K4M745	01/01 ⇨
THALIA II 1.4	K4J712, K4J713	01/09 ⇨ 12/11
THALIA II 1.6 16V	K4M670, K4M674, K4M744	09/08 ⇨
TRAFIC II 2.0	F4R720, F4R722	03/01 ⇨
TRAFIC II 2.0 16V	F4R820	08/06 ⇨
TWINGO II 1.6 RS	K4M854	05/08 ⇨ 09/14
VEL SATIS 2.0 16 V Turbo	F4R766, F4R767	04/04 ⇨
VEL SATIS 2.0 16V Turbo	F4R762, F4R763	06/02 ⇨ 08/09
VEL SATIS 2.0 Turbo	F4R767, F4R867	04/05 ⇨
WIND 1.6	K4M854	07/10 ⇨
MEGANE CC 1.6 16V	K4M858	06/10 ⇨
MEGANE CC 1.6 16V Hi-Flex	K4M866	06/10 ⇨
MEGANE CC 2.0 TCe	8XTDM10, F4R872	06/10 ⇨
MEGANE CC 2.0 Turbo	8AR90212	10/11 ⇨
VAUXHALL		
VIVARO 2.0 16V	F4R720	08/01 ⇨ 07/14
VIVARO 2.0 ECOTEC	F4R820	08/06 ⇨ 07/14

FACET 9.6333

05,5

COILS

Adatt./Suitable:

AUDI
077 905 115 B
077 905 115 C
077 905 115 E
077 905 115 F
077 905 115 H
077 905 115 K
077 905 115 P
077 905 115 Q
077 905 115 T

BOSCH
0 986 221 054

HITACHI
133845
2503845

MAGNETI MARELLI
060717169012

VW
077 905 115 B
077 905 115 C
077 905 115 E
077 905 115 F
077 905 115 H
077 905 115 K
077 905 115 P
077 905 115 Q
077 905 115 T

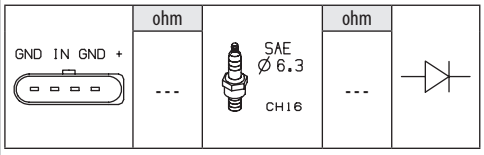

AUDI		
A4 II S4 quattro	BBK	03/03 ⇨ 12/04
A4 III S4 quattro	BBK, BHF	03/04 ⇨ 03/09
A6 III 4.2 quattro	BAT	05/04 ⇨ 05/06
A8 II 3.7 quattro	BFL	10/02 ⇨ 05/06
A8 II 4.2 quattro	BFM	10/02 ⇨ 07/10
ALLROAD 4.2 V8 quattro	BAS	07/02 ⇨ 08/05

FACET 9.6334

05,5

COILS

Adatt./Suitable:

AUDI
022 905 100 P
022 905 715 B
022 905 715 D

BOSCH
0 986 221 051

HITACHI
133847
2503847

MAGNETI MARELLI
060717102012

PORSCHE
955 602 101 00
955 602 101 01
955 602 101 02
955 602 101 03
955 602 101 04
955 602 101 05
958 602 101 00
PAB 905 715

SEAT
022 905 100 E
022 905 100 H
022 905 100 P
022 905 715

SKODA
022 905 715

VW
022 905 100 B
022 905 100 E
022 905 100 H
022 905 100 L
022 905 100 P
022 905 100 S
022 905 100 T
022 905 715
022 905 715 B
022 905 715 D

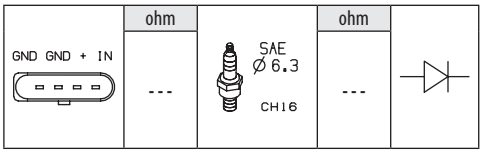

AUDI		
A3 I [USA] 3.2 24V	CBRA	07/08 ⇨ 05/09
A3 I [USA] 3.2 24V AWD	--	01/06 ⇨ 12/09
A3 II 3.2 V6 quattro	BDB, BMJ, BUB	07/03 ⇨ 05/09
TT I 3.2 VR6 quattro	BHE, BPF	07/03 ⇨ 06/06
TT II 3.2 V6 quattro	BUB	08/06 ⇨ 06/10
PORSCHE		
CAYENNE I 3.2	M02.2Y	08/03 ⇨ 09/07
CAYENNE I 3.6	M55.01	02/07 ⇨ 09/10
CAYENNE II 3.6	M55.02, MCE.YA	06/10 ⇨
SEAT		
LEON I 2.8	BDE	05/02 ⇨ 06/04
LEON I 2.8 Cupra 4	AUE, BDE	02/01 ⇨ 06/06
VW		
EOS 3.2 V6	BUB, CBRA	06/06 ⇨ 05/09
PASSAT V 3.2 FSI 4motion	AXZ	11/05 ⇨ 11/10
PASSAT V 3.6 FSI	BLV	06/05 ⇨ 11/10
PASSAT V 3.6 FSI 4motion	BLV	09/05 ⇨ 11/10
PASSAT V 3.6 R36 4motion	BWS	04/07 ⇨ 11/10
GOLF IV 3.2 R32 4motion	BFH, BML	09/02 ⇨ 06/05
GOLF V 3.2 R32 4motion	BUB	11/05 ⇨ 11/08
MULTIVAN 3.2 V6	BDL, BKK, CFLA	02/04 ⇨ 12/09
MULTIVAN 3.2 V6 4motion	BKK, CFLA	07/04 ⇨ 12/09
PHAETON 3.2 V6	AYT, BKL	04/02 ⇨ 05/05
PHAETON 3.2 V6 4motion	BKL, BRK	02/04 ⇨ 11/08
TOUAREG I 3.2 V6	AZZ, BAA, BKJ, BMV, BMX, BRJ	10/02 ⇨ 11/06
TOUAREG I 3.6 V6 FSI	BHL	10/05 ⇨ 05/10
TRANSPORTER V 3.2 4motion	BDL, BKK, CFLA	11/03 ⇨ 11/09
TRANSPORTER V 3.2 V6	BDL, BKK, CFLA	04/03 ⇨ 11/09
TRANSPORTER V 3.2 V6 4motion	BDL, BKK, CFLA	04/03 ⇨ 12/09

FACET 9.6335 — 05,5

COILS

Adatt./Suitable:

BOSCH
0 986 221 073

FORD
1 120 169
1 252 407
1 331 283
1 362 718
1 673 468
6M21-12029-AA
YM21-12029-AA
YM21-12029-AB
YM21-12029-AC
YM21-12029-AD

HITACHI
133848
2503848

MAGNETI MARELLI
060717143012
060717160012

SEAT
022 905 100 A
022 905 100 D
022 905 100 G
022 905 100 K
022 905 100 N
022 905 715 C

VW
022 905 100 A
022 905 100 AC
022 905 100 D
022 905 100 G
022 905 100 K
022 905 100 N
022 905 715 C

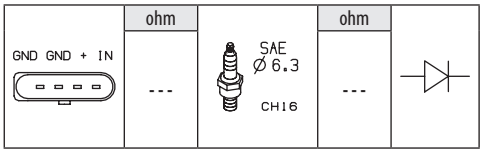

FORD		
GALAXY I 2.8	AAA, AYL	05/00 ⇨ 03/06
GALAXY I 2.8 i V6	AAA, AMY	11/95 ⇨ 04/00
GALAXY I 2.8 V6	AYL	04/00 ⇨ 05/06
SEAT		
ALHAMBRA I / II 2.8 V6	AUE, AYL	06/00 ⇨ 03/10
ALHAMBRA I / II 2.8 V6 4motion	AUE, AYL	06/00 ⇨ 03/10
LEON I 2.3 VR5	AQN	09/00 ⇨ 11/03
TOLEDO II 2.3 V5 20V	AQN	09/00 ⇨ 11/03
VW		
BORA 2.3 V5	AQN	10/00 ⇨ 05/05
BORA 2.3 V5 4motion	AQN	10/00 ⇨ 05/05
BORA 2.8 V6 4motion	AUE, BDE	03/99 ⇨ 05/05
BORA 2.8 VR6	AUE	03/00 ⇨ 05/00
GOLF IV 2.3 V5	AQN	10/00 ⇨ 06/06
GOLF IV 2.3 V5 4motion	AQN	10/00 ⇨ 06/06
GOLF IV 2.8 V6 4motion	AUE, BDE	05/99 ⇨ 06/06
GOLF IV 2.8 VR6 4motion	AUE, BDE	03/99 ⇨ 06/05
NEW BEETLE 2.3 V5	AQN	10/00 ⇨ 09/10
NEW BEETLE 3.2 RSI 4motion	AXJ	04/00 ⇨ 05/01
SHARAN I 2.8 V6 24V	AYL	04/00 ⇨ 03/10
SHARAN I 2.8 V6 24V 4motion	AYL	04/00 ⇨ 03/10
SHARAN I 2.8 VR6	AYL	08/01 ⇨ 05/03

FACET 9.6336 — 05,5

COILS

Adatt./Suitable:

AUDI
06C 905 115 A
06C 905 115 B
06C 905 115 D
06C 905 115 E
06C 905 115 F
06C 905 115 G
06C 905 115 H
06C 905 115 J
06C 905 115 K
06C 905 115 L
06C 905 115 M

BOSCH
0 986 221 053

HITACHI
133834
2503834

MAGNETI MARELLI
060717167012

VW
06C 905 115 A
06C 905 115 B
06C 905 115 D
06C 905 115 E
06C 905 115 F
06C 905 115 G
06C 905 115 H
06C 905 115 K
06C 905 115 L
06C 905 115 M

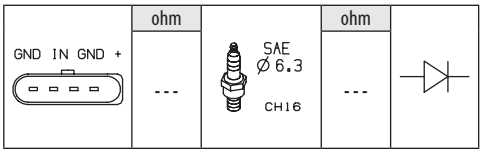

AUDI		
A6 III 3.0	BBJ	08/04 ⇨ 05/06
A6 III 3.0 [CHN]	BBJ	04/05 ⇨
A6 III 3.0 quattro	BBJ	05/04 ⇨ 05/06
A4 II 2.0	ALT	11/00 ⇨ 12/04
A4 II 3.0	ASN, AVK, BBJ	11/00 ⇨ 12/04
A4 II 3.0 quattro	ASN, AVK, BBJ	11/00 ⇨ 12/04
A6 II 2.0	ALT	08/01 ⇨ 01/05
A6 II 3.0	ASN, BBJ	06/01 ⇨ 01/05
A6 II 3.0 quattro	ASN, BBJ	06/01 ⇨ 01/05
A8 II 3.0	ASN, BBJ	07/03 ⇨ 05/06
A8 II 3.0 quattro	ASN, BBJ	07/03 ⇨ 05/05
A4 III 2.0	ALT	09/04 ⇨ 12/05
A4 III 3.0	ASN, BBJ	04/02 ⇨ 05/06
A4 III 3.0 quattro	ASN	05/03 ⇨ 07/06

FACET 9.6337 — 05,5

COILS

Adatt./Suitable:

BOSCH
0 986 221 055

VW
066 905 100
066 905 100 B
066 905 100 C
066 905 100 D
066 905 100 G
066 905 715

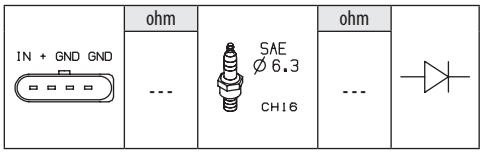

VW		
PASSAT IV 2.3 V5	AZX	11/00 ⇨ 05/05
PASSAT IV 2.3 V5 4motion	AZX	11/00 ⇨ 05/05
PASSAT IV 2.3 VR5	AZX	11/00 ⇨ 05/05
PASSAT IV 2.3 VR5 4motion	AZX	11/00 ⇨ 05/05

FACET 9.6342 — 05,5

COILS

Adatt./Suitable:

ABARTH
46777288
55246099

ALFA ROMEO
46777288
55246099

BOSCH
0 986 221 043
0 986 22A 204

CHAMPION
BAE 403 C

FIAT
46777288
504142675
55246099

GENERAL MOTORS
95 512 934

HITACHI
133801
2503801

IVECO
504142675

LANCIA
46777288
55246099

MAGNETI MARELLI
060717202012
060740303010

OPEL
12 08 108
95512934

VAUXHALL
95512934

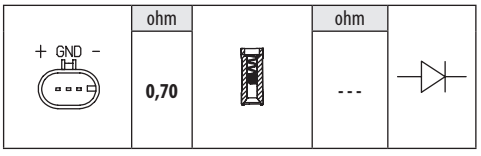

ALFA ROMEO		
MITO 1.4	199A6.000, 955A1000	08/08 ⇨ 08/13
FIAT		
500 0.9	312A4.000, 312A6.000	09/12 ⇨

FIAT		
500 1.4	169A3.000	10/07 ⇨
500 C 0.9	312A4.000, 312A6.000	09/12 ⇨
500 C 1.4	169A3.000, EAB	09/09 ⇨
500 MY12 0.9	--	01/12 ⇨
500 MY12 1.4	--	01/12 ⇨
500L 1.4	843A1.000	09/12 ⇨
BRAVO II 1.4	192B2.000	04/07 ⇨ 12/14
BRAVO II 1.4 16V	--	04/07 ⇨
BRAVO II 1.4 LPG	--	12/08 ⇨
BRAVO II 1.4 T-Jet	198A1.000, 198A4.000	09/07 ⇨ 12/14
DOBLO II 1.4	843A1.000	02/10 ⇨
DOBLO II 1.4 Natural Power	198A4000CNG	06/10 ⇨
DUCATO III 140 Natural Power	F1CE0441A, F1CFA401A, F1CFA401C	04/09 ⇨
PANDA III 0.9	312A4.000, 312A5.000, 312A6.000, 312A7.000	02/12 ⇨
PANDA III 0.9 4x4	312A2.000	06/14 ⇨
IDEA 1.2	--	01/08 ⇨
IDEA 1.2 16V	188A5.000	01/04 ⇨
IDEA 1.4	192B2.000	12/03 ⇨
IDEA 1.4 16V	--, 843A1.000	01/04 ⇨
LINEA 1.4 16V [IND]	--	06/07 ⇨
LINEA 1.4 T-Jet	198A4.000	05/07 ⇨
PANDA II 1.4	--	10/06 ⇨
PUNTO III / GRANDE PUNTO 1.4 16V	199A6.000	10/05 ⇨ 08/11
PUNTO III / GRANDE PUNTO 1.4 16V [IND]	--	01/08 ⇨
500 MY15 0.9	--	01/15 ⇨
500 MY15 1.4	--	01/15 ⇨
PUNTO II 1.4	199A6.000, 843A1.000	09/03 ⇨
STILO 1.2 16V	188A5.000	02/02 ⇨ 11/06
STILO 1.4	843A1.000	01/04 ⇨ 08/08
STILO 1.4 16V	192B2.000, 843A1.000	10/03 ⇨ 08/08
TIPO II 1.4	843A1.000	10/15 ⇨
IVECO		
DAILY IV 35C14 G, 35C14 G/P, 35S14 G, 35S14 G/P, 35C14 GD,...	F1CE0441A	07/07 ⇨ 08/11
DAILY IV 35C14 GV, 35C14 GV/P, 35S14 GV, 35S14 GV/P	F1CE0441A	07/07 ⇨ 08/11
DAILY IV 40C14 G, 40C14 G/P	F1CE0441A	07/07 ⇨ 08/11
DAILY IV 40C14 GV, 40C14 GV/P	F1CE0441A	07/07 ⇨ 08/11
DAILY IV 50C14 G, 50C14 G/P, 50C14 GD, 50C14 GD/P	F1CE0441A	07/07 ⇨ 08/11
DAILY IV 50C14 GV, 50C14 GV/P	F1CE0441A	07/07 ⇨ 08/11
DAILY IV 65C14 G, 65C14 G/P, 65C14 GD, 65C14 GD/P	F1CE0441A	07/07 ⇨ 08/11
DAILY IV Natural Power 35S14, 35C14, 40C14, 50C14, 65C14, 70C14	F1CE0441A	09/11 ⇨ 02/14
DAILY IV NaturalPower 35S14, 35C14, 40C14, 50C14, 60C14, 65C14,..	F1CE0441A	09/11 ⇨ 02/14
DAILY V NaturalPower 35S14, 35C14, 40C14, 50C14, 60C14, 65C14,..	F1CFA401A	03/14 ⇨
DAILY V NaturalPower 40C14, 50C14, 60C14	F1CFA401A, F1CFA401C	03/14 ⇨
DAILY 3.0 CNG	F1CE0441A	06/06 ⇨ 02/14
LANCIA		
MUSA 1.4	192B2.000, 843A1.000	10/04 ⇨ 09/12
MUSA 1.4 16V	--	01/11 ⇨ 12/12
YPSILON II 1.2	188A5.000	10/03 ⇨ 12/11
YPSILON II 1.4 16V	843A1.000	10/03 ⇨ 12/11
OPEL		
COMBO D 1.4	A14FP	02/12 ⇨
VAUXHALL		
COMBO D 1.4	A14FP	11/11 ⇨

FACET **9.6345** 07

COILS

Adatt./Suitable:

AUDI
06B 905 115
06B 905 115 B
06B 905 115 E

HITACHI
133828
2503828
CM11-201

MAGNETI MARELLI
060717158012

SEAT
06B 905 115 B
06B 905 115 E

SKODA
06B 905 115 B
06B 905 115 E

VW
06B 905 115
06B 905 115 B
06B 905 115 E

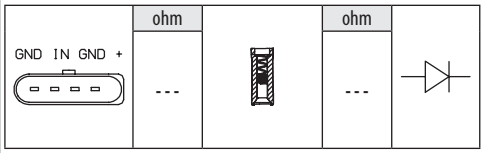

AUDI		
A3 I 1.8 T	AJQ, APP, ARZ	12/96 ⇨ 05/03
A3 I 1.8 T quattro	AJQ, AQA	12/96 ⇨ 05/03
A3 I S3 quattro	AMK, APY, AUL	03/99 ⇨ 04/02
A6 II 1.8	AJP, AQE, ARH	07/97 ⇨ 01/05
A6 II 4.2 quattro	ARS, ASG	11/98 ⇨ 01/05
A6 II RS6 plus quattro	BRV	04/04 ⇨ 01/05
A6 II RS6 quattro	BCY	07/02 ⇨ 01/05
A6 II S6 quattro	ANK, AQJ	09/99 ⇨ 01/05
A8 I 3.7	AKC, AQG	11/98 ⇨ 09/02
A8 I 3.7 quattro	AKC, AQG	11/98 ⇨ 09/02
A8 I 4.2 quattro	ABZ, AKG, AQF, ARU, AUW	03/94 ⇨ 12/99
A8 I S8 quattro	AQH, AVP, AYS, BCS	09/00 ⇨ 09/02
TT I 1.8 T	AJQ, APP, ATC, AUQ	10/98 ⇨ 06/06
TT I 1.8 T quattro	AJQ, APX, ARY, ATC, AUQ, BAM	10/98 ⇨ 06/06
SEAT		
CORDOBA I 1.8 T 20V Cupra	AQX	07/00 ⇨ 10/02
IBIZA II 1.8 T 20V Cupra	AQX	07/00 ⇨ 02/02
ALHAMBRA I / II 1.8 T 20V	AWC	10/97 ⇨ 03/10
LEON I 1.8 20V T	APP	11/99 ⇨ 06/06
LEON I 1.8 20V T 4	AJQ	11/99 ⇨ 06/06
TOLEDO II 1.8 20VT	AUQ	09/00 ⇨ 07/04
TOLEDO II 1.8 4x4	AJQ	05/01 ⇨ 04/04
SKODA		
OCTAVIA I 1.8 T	ARX, AUM	08/97 ⇨ 12/10
VW		
GOLF IV 1.8 T	ARZ, AUM	08/97 ⇨ 06/06
GOLF IV 1.8 T GTI	AUQ	08/01 ⇨ 06/05
NEW BEETLE 1.8 T	AGU, APH, AVC, AWU, AWV	10/99 ⇨ 09/10
PASSAT IV 1.8 [CHN]	ANQ	03/00 ⇨ 12/03
SHARAN I 1.8 T 20V	AWC	09/97 ⇨ 03/10

FACET **9.6348** 07

COILS

Adatt./Suitable:

BOSCH
0 221 604 001
0 221 604 008

HITACHI
133870
2503870

VOLVO
30713416
9125601

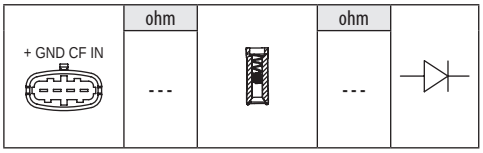

VOLVO		
C70 I 2.0 T	B5204T3, B5204T4	03/00 ⇨ 10/05
C70 I 2.3 T5	B5234T3, B5234T9	07/02 ⇨ 10/05
C70 I 2.3 T-5	B5234T3	03/97 ⇨ 09/02
C70 I 2.4	B5244S, B5254S, B5254SDENS	06/98 ⇨ 10/05
C70 I 2.4 T	B5244T, B5244T7, B5254T	03/97 ⇨ 10/05
S60 I 2.0 T	B5204T5	07/00 ⇨ 04/10
S60 I 2.3 T5	B5234T7	07/00 ⇨ 09/02
S60 I 2.4	B5244S, B5244S2, B5244T4	07/00 ⇨ 04/10
S60 I 2.4 Bifuel	B5244SG, B5244SG2	07/01 ⇨ 04/10
S60 I 2.4 T	B5244T3	07/00 ⇨ 04/10
S60 I 2.4 T AWD	B5244T3	06/01 ⇨ 04/10
S60 I 2.4 T5	B5244T5	04/04 ⇨ 04/10
S60 I 2.5 T	B5254T2	01/03 ⇨ 04/10
S60 I 2.5 T AWD	B5254T2	07/02 ⇨ 04/10
S60 I R 2,5 T AWD	B5254T4	01/03 ⇨ 04/10
S60 I T5	B5234T3	07/00 ⇨ 04/10
S70 2.0	B5204T4	01/97 ⇨ 11/00
S70 2.3	B5234FS, B5234T7	01/97 ⇨ 07/99
S70 2.3 AWD	B5234T7	04/99 ⇨ 09/00
S70 2.4	B5244S, B5244S2, B5244SG, B5254S, B5254SDENS	01/97 ⇨ 11/00
S70 2.4 AWD	B5244S, B5244S2, B5254SDENS	10/98 ⇨ 05/99
S70 2.4 Bifuel	B5244SG, B5244SG2	07/99 ⇨ 11/00
S70 2.4 Blu-Fuel	B5244S2, B5244SG	07/97 ⇨ 09/00
S70 2.4 T5 AWD	B5254T	11/96 ⇨ 04/99
S70 2.4 Turbo	B5244T	01/97 ⇨ 11/00
S80 I 2.0	B5204T4	06/98 ⇨ 07/06
S80 I 2.0 T	B5204T3, B5204T5	06/98 ⇨ 07/06
S80 I 2.3 R	B5234T7	04/00 ⇨ 08/05
S80 I 2.4	B5244S, B5244S2	01/99 ⇨ 07/06
S80 I 2.4 Bifuel	B5244SG, B5244SG2	09/01 ⇨ 07/06
S80 I 2.4 T	B5244T3	06/00 ⇨ 07/06
S80 I 2.4 T5 AWD	B5244T3	04/00 ⇨ 09/03
S80 I 2.5 T	B5254T2	03/03 ⇨ 07/06
S80 I 2.5 T AWD	B5254T2	07/03 ⇨ 07/06
S80 I 2.8 T6	B6284T	05/98 ⇨ 12/01
S80 I 2.9	B6294S, B6294S2, B6304S3	05/98 ⇨ 02/08
S80 I 2.9 T6	B6294T	06/01 ⇨ 07/06
S80 I 3.0	B6294S2	06/01 ⇨ 07/06
S80 I 3.0 T6	B6294T	06/01 ⇨ 07/06
V70 2.4 LPG	B5244SG2	07/97 ⇨ 03/00
V70 I 2.0	B5204T4	01/97 ⇨ 12/00
V70 I 2.3	B5234FS	01/97 ⇨ 07/99
V70 I 2.3 AWD	B5234T7, B5234T8	12/98 ⇨ 02/00
V70 I 2.4	B5244S, B5244S2, B5244SG2, B5254S, B5254SDENS	12/95 ⇨ 12/99
V70 I 2.4 AWD	B5254SDENS	06/98 ⇨ 12/99
V70 I 2.4 Bifuel	B5244SG, B5244SG2	08/99 ⇨ 12/00
V70 I 2.4 Turbo	B5244T	04/96 ⇨ 12/00
V70 I 2.4 Turbo AWD	B5244T, B5244T2	04/96 ⇨ 12/00

VOLVO		
V70 II 2.3	B5234T7	10/00 ⇨ 09/04
V70 II 2.3 AWD	B5234T7	10/00 ⇨ 09/04
V70 II 2.3 T5	B5234T3	11/99 ⇨ 12/04
V70 II 2.4	B5244S, B5244S2	03/00 ⇨ 08/07
V70 II 2.4 Bifuel	B5244SG, B5244SG2	09/01 ⇨ 08/07
V70 II 2.4 T	B5244T3	11/99 ⇨ 08/03
V70 II 2.4 T AWD	B5244T3	09/01 ⇨ 08/02
V70 II 2.5 AWD	B5254T2	09/02 ⇨ 12/04
XC70 I 2.3 T XC AWD	B5234T7	01/01 ⇨ 07/04
XC70 I 2.5 T XC AWD	B5254T2	09/02 ⇨ 08/07
XC90 I 2.5 T AWD	B5254T2, B5254T9	10/02 ⇨ 09/14
XC90 I T6 AWD	B6294T	10/02 ⇨ 12/06

FACET 9.6350 — 08,6

COILS

Adatt./Suitable:

ALFA ROMEO
71739725
71744369
71779115

BOSCH
0 986 221 104

FIAT
71739725
71744369
71779115

GENERAL MOTORS
1 104 082
10 458 316
95 517 924

HITACHI
133832
2503832

MAGNETI MARELLI
060717156012

OPEL
10458316
12 08 021
12 08 120
95517924

SAAB
10 458 316

VAUXHALL
10458316
95517924

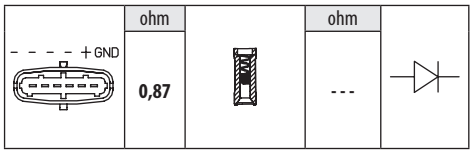

ALFA ROMEO		
159 1.8 MPI	939A4.000	06/05 ⇨ 11/11
FIAT		
CROMA II 1.8 16V	939A4.000	12/05 ⇨
STILO 1.6	192B3.000	04/05 ⇨ 08/08
STILO 1.6 16V	192B3.000	03/05 ⇨ 12/07
OPEL		
ZAFIRA TOURER 1.6 CNG	A16XNT, B16XNT	10/11 ⇨
ASTRA G 1.6	Z16XEP	11/02 ⇨ 12/09
ASTRA G 1.6 16V	Z16XEP	03/00 ⇨ 05/05
ASTRA G 1.6 LPG	Z16XEP	06/02 ⇨ 06/07
ASTRA H 1.6	A16XER, Z16XE1, Z16XEP, Z16XER	03/04 ⇨ 05/14
ASTRA H 1.6 EcoTec	Z16XEP, Z16XER	02/04 ⇨ 12/10
ASTRA H 1.6 LPG	Z16XER	08/09 ⇨ 10/10
ASTRA H 1.6 Turbo	A16LET, Z16LET	02/07 ⇨ 10/10
ASTRA H 1.8	A18XER, Z18XER	08/05 ⇨ 05/14
ZAFIRA B 1.6	A16XER, Z16XE1, Z16XEP, Z16XER	07/05 ⇨ 04/15
ZAFIRA B 1.6 CNG Turbo	A16XNT, Z16XNT	04/10 ⇨ 04/15
ZAFIRA B 1.6 CNG Turbo VAN	A16XNT, Z16XNT	02/09 ⇨ 04/15
ZAFIRA B 1.6 FlexFuel	Z16XER	08/08 ⇨ 12/12
ZAFIRA B 1.8	A18XER, Z18XER	07/05 ⇨ 04/15
ZAFIRA B 1.8 LPG	Z18XER	07/09 ⇨ 04/15
ZAFIRA B 1.8 VAN	A18XER, Z18XER	07/05 ⇨ 04/15
ASTRA J 1.6	Z16XER	12/06 ⇨
ASTRA J 1.8	Z18XER	02/07 ⇨
CORSA D 1.6	Z16LER	07/12 ⇨ 08/14

OPEL		
CORSA D 1.6 Turbo	A16LEL, A16LER, A16LES, B16LER, Z16LEL, Z16LER	11/06 ⇨ 08/14
INSIGNIA A 1.6 Turbo	A16LET	07/08 ⇨ 03/17
MERIVA A 1.6	Z16XEP	01/06 ⇨ 05/10
MERIVA A 1.6 Turbo	Z16LET	09/05 ⇨ 05/10
SIGNUM 1.8	Z18XER	09/05 ⇨ 12/08
VECTRA C 1.6	Z16XEP	08/05 ⇨ 08/08
VECTRA C 1.8	Z18XER	08/05 ⇨ 08/08
ZAFIRA A 1.6	Z16XEP	10/03 ⇨ 06/05
ZAFIRA A 1.6 16V	Z16XEP	10/03 ⇨ 06/05
SAAB		
9-5 1.6 Turbo	A16LET	05/10 ⇨ 01/12
VAUXHALL		
ASTRA IV 1.6	Z16XEP	12/02 ⇨ 05/05
ASTRA IV 1.6 16V	Z16XEP	09/98 ⇨ 10/05
ASTRA V 1.6	A16LET, A16XER, Z16LET, Z16XE1, Z16XEP, Z16XER	01/04 ⇨ 03/11
ASTRA V 1.6 i 16V	A16XER, Z16XER	10/06 ⇨ 08/11
ASTRA V 1.6 Turbo	A16LET, Z16LET	09/06 ⇨ 09/09
ASTRA V 1.8	A18XER, Z18XER	01/04 ⇨ 11/10
ASTRA V 1.8 i 16V	A18XER, Z18XER	03/07 ⇨ 11/10
ASTRAVAN II 1.6 Dualfuel	Z16XE, Z16XEP	07/00 ⇨ 08/05
ASTRAVAN II 1.6 Dualfuel 16V	Z16XEP	10/04 ⇨ 12/05
CORSA D 1.6 SRi	A16LEL, Z16LEL	05/07 ⇨ 08/14
CORSA D 1.6 VXR	A16LER, A16LES, B16LER, Z16LER	11/06 ⇨ 08/14
INSIGNIA 1.6 Turbo	A16LET	01/09 ⇨ 05/17
ASTRAVAN III 1.6	Z16XE1, Z16XEP	03/05 ⇨
MERIVA I 1.6 i 16V Twinport	Z16XEP	05/03 ⇨ 06/10
MERIVA I 1.6 Turbo	Z16LET	05/06 ⇨ 06/10
SIGNUM 1.8	Z18XER	08/05 ⇨ 05/08
VECTRA C 1.6 16V	Z16XEP	01/06 ⇨ 07/08
VECTRA C 1.8	Z18XER	01/06 ⇨ 07/08
ZAFIRA B 1.6	A16XER, Z16XE1, Z16XEP, Z16XER	07/05 ⇨ 11/14
ZAFIRA B 1.6 CNG Turbo	A16XNT, Z16XNT	02/09 ⇨ 11/14
ZAFIRA B 1.8	A18XER, Z18XER	04/05 ⇨ 11/14
ZAFIRA C 1.6 CNG	A16XNT	10/11 ⇨ 08/18

FACET 9.6357 — 05,5

COILS

Adatt./Suitable:

BOSCH
F 005 X11 800

DENSO
099 700-061
099 700-072
099 700-114
DIC-0144

HITACHI
133913
2503913
CM11-207A

HONDA
30520-P8E-A01
30520-P8E-S01
30520-P8F-A01
30520-P8F-A02
30520-PGK-A01
30520-PVF-A01
30520-PVJ-A01
30520-RCA-A01
30520-RCA-A02
30520-RCA-S01
30520-RJA-A01

MAGNETI MARELLI
060717088012
060810231010

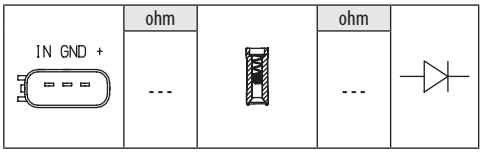

HONDA		
ACCORD VI 3.0 V6 24V	J30A1	02/98 ⇨ 06/03
ACCORD VI 3.0 Vtec	J30A1	03/97 ⇨ 12/03
CIVIC VII 1.4	D14Z5	12/00 ⇨ 09/05
CIVIC VII 1.4 i	D14Z6	02/01 ⇨ 09/05

HONDA		
CIVIC VII 1.4 iS	D14Z5, D14Z6	02/01 ⇨ 09/05
CIVIC VII 1.4i 16V	D14Z6	02/01 ⇨
CIVIC VII 1.5	D15Y3	02/03 ⇨ 09/05
CIVIC VII 1.5 i 16V	D15Y2, D15Y3	01/01 ⇨
CIVIC VII 1.6	D16V1, D16W7	02/01 ⇨ 09/05
CIVIC VII 1.6 i	D16V1, D16W7	02/01 ⇨ 12/05
CIVIC VII 1.6i 16V	D16W7	04/01 ⇨
CIVIC VII 1.6i 16V Vtec	D16V3	04/01 ⇨
CIVIC VII 1.7	D17A6	01/00 ⇨ 09/05
CIVIC VII 1.7 i	D17A8	05/01 ⇨ 12/05
CIVIC VII 1.7 i 16V VTi	D17A5, D17Z4	02/01 ⇨
CIVIC VII 1.7 i VTEC	D17A5, D17A9	05/01 ⇨ 12/05
FR-V 1.7	D17A2	08/04 ⇨
LEGEND IV 3.5 i	J35A8	10/04 ⇨
LEGEND IV 3.5 V6 4WD	J35A8	05/06 ⇨ 12/12
LEGEND IV 3.5 VTEC V6	C35A8	10/04 ⇨ 06/09
LEGEND IV 3.7 VTEC V6 4WD	J37A3	08/08 ⇨ 12/13
MR-V 3.5	J35A4, J35A6, J35A9	01/03 ⇨
ODYSSEY 3.5	J35A2, J35A4, J35A6	01/00 ⇨
STREAM 1.7 16V	D17A2	05/01 ⇨ 09/06

FACET 9.6358 — 05,5

COILS

Adatt./Suitable:

BOSCH
0 986 AG0 508
F 005 X11 793

DENSO
DIC-0134

HITACHI
133874
2503874

LEXUS
90919-02248
90919-02260

MAGNETI MARELLI
060717086012

TOYOTA
90919-02247
90919-02248
90919-02260
90919-A2001
90919-A2006
90919-C2002
90919-C2006
90919-T2001
90919-T2005
90919-T2008

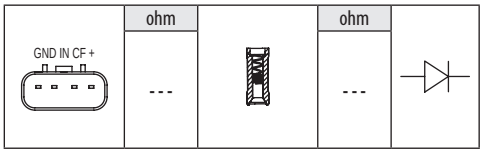

LEXUS		
GS F	2UR-GSE	09/15 ⇨
LC 500	2UR-GSE	11/16 ⇨
RC F	2UR-GSE	08/14 ⇨
TOYOTA		
COROLLA X 1.5	1NZ-FE	09/06 ⇨
COROLLA X 1.5 4WD	1NZ-FE	09/06 ⇨
COROLLA X 2.4	2AZ-FE	01/08 ⇨
AVENSIS I 2.0	1AZ-FSE	10/00 ⇨ 02/03
AVENSIS I 2.0 VVT-i	1AZ-FSE	10/00 ⇨ 02/03
AVENSIS II 2.0	1AZ-FSE	03/03 ⇨ 11/08
AVENSIS II 2.0 VVTi	1AZ-FE, 1AZ-FSE	01/03 ⇨ 11/08
AVENSIS II 2.4	2AZ-FSE	09/03 ⇨ 11/08
CAMRY 2.0	1AZ-FE	05/06 ⇨
CAMRY 2.4	2AZ-FE	09/01 ⇨ 09/11
CAMRY 2.4 [CHN]	3AZ-FXE	03/10 ⇨
CAMRY 2.4 Hybrid	2AZ-FXE	01/06 ⇨ 09/11
CAMRY SOLARA II 2.4	2AZ-FE	07/03 ⇨ 11/08
COROLLA XI 1.5	1NZ-FE	05/12 ⇨
COROLLA XI 1.5 4WD	1NZ-FE	05/12 ⇨
LAND CRUISER 200 4.0	1GR-FE	01/10 ⇨
FJ CRUISER 4.0	1GR-FE	06/05 ⇨ 12/11
FJ CRUISER 4.0 4WD	1GR-FE	06/05 ⇨ 01/18
FORTUNER 2.7 4x4	2TR-FE	05/15 ⇨
HIACE IV 2.7	2TR-FE	01/05 ⇨

TOYOTA		
HIACE IV 2.7 VVTi	2TR-FE	01/05 ⇨
LAND CRUISER 2.7	2TR-FE	08/04 ⇨
LAND CRUISER 4.0	1GR-FE	01/03 ⇨ 08/09
LAND CRUISER 120 2.7	2TR-FE	11/03 ⇨ 02/10
LAND CRUISER 120 4.0	1GR-FE	09/02 ⇨ 12/10
LAND CRUISER 120 4.0 V6 VVT-i	1GR-FE	01/03 ⇨ 07/09
MATRIX 2.4	2AZ-FE	01/08 ⇨ 05/14
RAV 4 III 2.0 VVT-i [CHN]	1AZ-FE	03/09 ⇨
RAV 4 III 2.4 VVTi [CHN]	2AR-FE	03/09 ⇨
TARAGO MPV / SPACE 2.4 VVTi	2AZ-FE	02/00 ⇨ 12/05
HILUX VII 2.0	1TR-FE	06/05 ⇨ 05/15
HILUX VII 2.7	2TR-FE	02/05 ⇨
HILUX VII 2.7 4WD	2TR-FE	08/05 ⇨ 05/15
HILUX VII 4.0	1GR-FE	02/05 ⇨
HILUX VII 4.0 4WD	1GR-FE	02/05 ⇨

FACET 9.6359

05,5

COILS

Adatt./Suitable:

BOSCH
0 986 AG0 502
CITROËN
16 115 478 80
DENSO
DIC-0101
DIC-0146
HITACHI
133844
2503844
MAGNETI MARELLI
060717078012
PEUGEOT
16 115 478 80
TOYOTA
90080-19021
90919-02229
90919-02240
90919-02265
90919-02270
90919-W2002

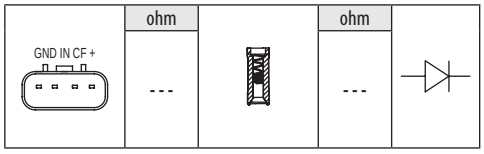

CITROËN		
C1 II 1.0 VTi 68	CFB(1KR)	04/14 ⇨
C1 II 1.0 VTi 72	CFB(1KR)	06/18 ⇨
PEUGEOT		
108 1.0 VTi	1KR-FE, CFB(1KR)	05/14 ⇨
108 1.0 VTi 72	CFB(1KR)	05/18 ⇨
TOYOTA		
AQUA 1.5 Hybrid	1NZ-FXE	12/11 ⇨
COROLLA X 1.3 VVT-i	2NZ-FE	03/08 ⇨
COROLLA X 1.5	1NZ-FE	09/06 ⇨
COROLLA X 1.5 4WD	1NZ-FE	09/06 ⇨
AYGO II 1.0	1KR-FE	05/14 ⇨
AYGO II 1.0 VVTi	1KR-FE	03/18 ⇨
COROLLA XI 1.5 Hybrid	1NZ-FXE	10/14 ⇨
ECHO 1.5 i 16V [USA]	1NZFE	08/99 ⇨
IQ 1.0	1KR-FE	01/09 ⇨ 12/15
PRIUS I 1.5 Hybrid	1NZ-FXE	05/00 ⇨ 01/04
PRIUS II 1.5 Hybrid	1NZ-FXE	09/03 ⇨ 12/09
PRIUS C 1.5 Hybrid	1NZ-FXE	12/11 ⇨
VIOS / YARIS 1.3	2NZ-FE, 2SZ-FE	09/05 ⇨ 10/13
VIOS / YARIS 1.3 4WD	2NZ-FE	09/05 ⇨ 04/13
VIOS / YARIS 1.5	1NZ-FE	08/07 ⇨
YARIS I 1.0	1SZ-FE	03/03 ⇨ 09/05
YARIS I 1.3	2NZ-FE, 2SZ-FE	04/02 ⇨ 11/05
YARIS I 1.5	1NZ-FE	03/00 ⇨ 11/05
YARIS II 1.3 4WD	2NZ-FE	08/07 ⇨ 11/10
YARIS II 1.3 VVT-i	2NZ-FE, 2SZ-FE	08/05 ⇨ 12/12
YARIS II 1.5	1NZ-FE	11/05 ⇨
YARIS III 1.0 VVTi	1KR-FE	07/14 ⇨
YARIS III 1.3	2NZ-FE	12/11 ⇨
YARIS III 1.5	1NZ-FE	12/10 ⇨
YARIS III 1.5 Hybrid	1NZ-FXE	03/12 ⇨
YARIS VERSO 1.3	2NZ-FE	11/02 ⇨ 09/05
YARIS VERSO 1.3 VVTi	2NZ-FE	03/00 ⇨ 09/05
YARIS VERSO 1.5	1NZ-FE	01/00 ⇨ 09/05
YARIS VERSO 1.5 VVTi	1NZ-FE	03/00 ⇨ 03/03

FACET 9.6361

05,5

COILS

Adatt./Suitable:

BOSCH
0 986 AG0 503
F 005 X11 783
CITROËN
5970 88
5970 C0
5970 C1
DAIHATSU
90919-02262
DENSO
DIC-0100
HITACHI
133846
2503846
MAGNETI MARELLI
060717126012
PEUGEOT
5970 88
5970 C0
5970 C1
TOYOTA
90080-19015
90080-19019
90919-02239
90919-02262
90919-T2002
90919-T2006
90919-W2001

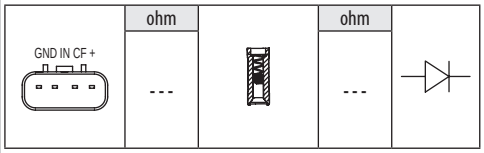

CITROËN		
C1 I 1.0	384F, CFA(384F), CFB(1KR)	06/05 ⇨
DAIHATSU		
CUORE VII 1.0 LPG	1KR-FE	09/11 ⇨ 12/12
PEUGEOT		
107 1.0	CFA(384F), CFB(1KR)	06/05 ⇨ 05/14
TOYOTA		
COROLLA X 1.4 VVT-i	4ZZFE	11/06 ⇨ 11/13
COROLLA X 1.6 VVTi	3ZZ-FE	08/07 ⇨ 06/13
COROLLA X 1.8 16V	2CJXG	08/07 ⇨
COROLLA X 1.8 CNG	2CJXG	06/09 ⇨
COROLLA X 1.8 FlexFuel [BRA]	1ZZ-FBE	03/08 ⇨
AURIS I 1.4	85HFC4GB	03/07 ⇨ 09/12
AVENSIS I 1.6	3ZZ-FE	07/00 ⇨ 02/03
AVENSIS I 1.6 VVT-i	3ZZ-FE	10/00 ⇨ 02/03
AVENSIS I 1.8	1ZZFE	10/00 ⇨ 02/03
AVENSIS I 1.8 VVT-i	1ZZFE	10/00 ⇨ 02/03
AVENSIS II 1.6 VVT-i	3ZZ-FE	04/03 ⇨ 11/08
AVENSIS II 1.8	1ZZFE	03/03 ⇨ 11/08
AYGO I 1.0	1KR-FE	07/05 ⇨ 05/14
AYGO I 1.0 GPL	1KR-FE	07/05 ⇨ 05/14
AYGO I 1.0 VVTi	1KR-FE	07/05 ⇨ 05/14
CELICA VII 1.8 16V VT-i	1ZZFE	08/99 ⇨ 07/05
COROLLA VIII 1.6	3ZZ-FE	10/99 ⇨ 01/02
COROLLA VIII 1.6 16V	3ZZ-FE	10/99 ⇨ 12/01
COROLLA IX 1.4 VVT-i	02Z24	10/01 ⇨ 02/07
COROLLA IX 1.6 VVT-i	3ZZ-FE	10/01 ⇨ 03/08
COROLLA IX 1.8	1ZZFE	12/01 ⇨ 12/07
COROLLA VERSO I 1.6 VVT-i	3ZZ-FE	08/01 ⇨ 05/04
COROLLA VERSO I 1.8 VVT-i	1ZZFE	12/01 ⇨ 05/04
COROLLA VERSO I 1.8 VVTi 4WD	2CJXG	07/01 ⇨ 02/04
COROLLA VERSO II 1.6	3ZZ-FE	04/04 ⇨ 03/09
COROLLA VERSO II 1.8	1ZZFE	04/04 ⇨ 03/09
MR 2 III 1.8 16V VT-i	1ZZFE	10/99 ⇨ 06/07
RAV 4 II 1.8	1ZZFE	08/00 ⇨ 11/05
VIOS / YARIS 1.0	1KR-FE	09/05 ⇨ 10/13
YARIS II 1.0 GPL	1KR-FE	01/06 ⇨ 12/11
YARIS II 1.0 VVT-i	1KR-FE	08/05 ⇨ 12/11
YARIS III 1.0	1KR-FE	12/10 ⇨

FACET 9.6366

05,5

COILS

Adatt./Suitable:

BOSCH
0 986 AG0 506
F 005 X11 794
DENSO
DIC-0102
HITACHI
134010
2504010
LEXUS
90919-02244
90919-02266
MAGNETI MARELLI
060717119012
TOYOTA
90080-19023
90919-02243
90919-02244
90919-02266

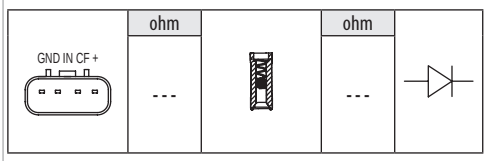

LEXUS		
HS 250h	2AZ-FXE	07/09 ⇨ 01/18
TOYOTA		
COROLLA X 2.4	2AZ-FE	01/08 ⇨
AVENSIS II 2.0	1AZ-FE	08/01 ⇨ 11/09
AVENSIS II 2.0 VVTi	1AZ-FE	01/03 ⇨ 11/08
AVENSIS II 2.4	2AZ-FE	08/01 ⇨ 08/07
AVENSIS II 2.4 4WD	2AZ-FE	11/03 ⇨ 08/06
AVENSIS III 2.0	1AZ-FE	11/08 ⇨ 04/11
CAMRY 2.0	1AZ-FE	08/01 ⇨ 11/06
CAMRY 2.4	2AZ-FE	09/01 ⇨ 09/11
CAMRY 2.4 Hybrid	2AZ-FXE	01/06 ⇨ 09/11
CAMRY 2.4 VVTi LE	2AZ-FE	01/06 ⇨ 11/06
CAMRY SOLARA II 2.4	2AZ-FE	07/03 ⇨ 11/08
MATRIX 2.4	2AZ-FE	01/08 ⇨ 05/14
MATRIX 2.4 4WD	2AZ-FE	01/09 ⇨ 12/10
PICNIC II 2.0 VVTi	1AZ-FE	05/01 ⇨ 08/06
PICNIC II 2.4 VVTi	2AZ-FE	11/03 ⇨ 08/06
PREVIA II 2.4	2AZ-FE	02/00 ⇨ 02/06
RAV 4 II 2.0	1AZ-FE	09/00 ⇨ 12/03
RAV 4 II 2.0 4WD	1AZ-FE	05/00 ⇨ 11/05
RAV 4 II 2.4 4WD	2AZ-FE	08/03 ⇨ 11/05
RAV 4 III 2.0 4WD	1AZ-FE	02/06 ⇨ 06/13
RAV 4 III 2.4	2AZ-FE	11/05 ⇨ 12/13
RAV 4 III 2.4 4WD	2AZ-FE	11/05 ⇨ 06/13
PREVIA III 2.4	2AZ-FE	10/05 ⇨
TARAGO MPV / SPACE 2.4 VVTi	2AZ-FE	02/00 ⇨ 12/05

9.6374

FACET **9.6374** 05,5

COILS

Adatt./Suitable:

AUDI
036 905 100 A
036 905 100 B
036 905 100 C
036 905 100 D
036 905 715
036 905 715 A
036 905 715 C
036 905 715 E
036 905 715 F
036 905 715 G
036 905 715 H

BOSCH
0 986 221 023

HITACHI
133807
2503807

MAGNETI MARELLI
060717062012

SEAT
036 905 100 A
036 905 100 B
036 905 100 C
036 905 100 D
036 905 715
036 905 715 A
036 905 715 C
036 905 715 E
036 905 715 F
036 905 715 G
036 905 715 H

SKODA
036 905 100 A
036 905 100 B
036 905 100 C
036 905 100 D
036 905 715
036 905 715 A
036 905 715 C
036 905 715 E
036 905 715 F
036 905 715 G
036 905 715 H

VW
036 905 100 A
036 905 100 B
036 905 100 C
036 905 100 D
036 905 715
036 905 715 A
036 905 715 C
036 905 715 E
036 905 715 F
036 905 715 G
036 905 715 H

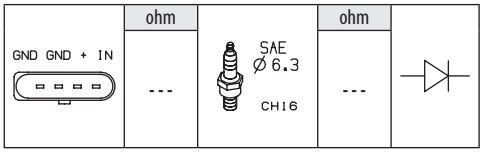

AUDI		
A1 1.4 TFSI	CAVG, CAXA, CNVA, CTHG	05/10 ⇨ 04/15
A2 1.4	BBY	02/00 ⇨ 08/05
A2 1.6 FSI	BAD	05/02 ⇨ 08/05
A3 II 1.4 TFSI	CAXC, CMSA	09/07 ⇨ 05/13
A3 II 1.6 FSI	BAG, BLF, BLP	08/03 ⇨ 09/07
SEAT		
ALTEA 1.4 16V	BXW, CGGB	05/06 ⇨
ALTEA 1.4 TFSi	CAXC	05/10 ⇨ 04/11
ALTEA 1.4 TSI	CAXC	11/07 ⇨
ALTEA XL 1.4 16V	BXW, CGGB	10/06 ⇨
ALTEA XL 1.4 TSI	CAXC	11/07 ⇨
ALHAMBRA III 1.4 TSI	CAVA, CTHA	06/10 ⇨
IBIZA III 1.2	AZQ, BME	02/02 ⇨ 06/06
IBIZA III 1.2 12V	BXV	05/06 ⇨ 11/09
IBIZA III 1.4 16V	AUB, BBY, BBZ, BKY, BXW	02/02 ⇨ 11/09
IBIZA III 1.6 16V	BTS	11/06 ⇨ 11/09
CORDOBA II 1.2	AZQ, BME	10/02 ⇨ 06/06
CORDOBA II 1.2 12V	BXV	05/06 ⇨ 11/09
CORDOBA II 1.4 16V	BBY, BBZ, BKY, BUD, BXW	09/02 ⇨
CORDOBA II 1.6 16V	BTS	11/06 ⇨ 11/09
IBIZA IV 1.2	BZG, CGPA, CGPB, CJLB	03/08 ⇨ 05/15
IBIZA IV 1.2 LPG	BZG	03/08 ⇨ 05/11
IBIZA IV 1.4	BXW, CGGB	03/08 ⇨ 05/15
IBIZA IV 1.4 LPG	BXW	03/08 ⇨ 05/11
IBIZA IV 1.4 TSI	CAVF, CNUB, CTHF, CTJB	01/09 ⇨ 05/15
IBIZA IV 1.4 TSI Cupra	CAVE, CTHE, CTJC	06/09 ⇨ 05/15
SEAT		
IBIZA IV 1.6	BTS	05/08 ⇨ 05/15
IBIZA IV 1.6 LPG	CNKA	05/11 ⇨ 05/15
IBIZA 1.2	BZG, CGPA, CGPB	04/08 ⇨ 05/15
IBIZA 1.4	BXW, CGGB	07/08 ⇨ 05/15
IBIZA 1.6	BTS	07/08 ⇨ 05/15
LEON I 1.4 16V	BCA	11/99 ⇨ 06/06
LEON I 1.6 16 V	AZD, BCB	09/00 ⇨ 06/06
LEON II 1.4 16V	BXW	06/06 ⇨ 12/12
LEON II 1.4 TSI	CAXC	11/07 ⇨ 12/12
LEON II 2.0 TFSI	CCZB	06/09 ⇨ 12/12
TOLEDO II 1.4 16V	BCA	01/00 ⇨ 05/02
TOLEDO II 1.6 16V	AZD, BCB	06/00 ⇨ 05/06
TOLEDO III 1.4 16V	BXW	05/06 ⇨ 05/09
TOLEDO IV 1.2	CGPC	07/12 ⇨ 06/15
TOLEDO IV 1.4 TSI	CAXA	07/12 ⇨ 06/15
TOLEDO IV 1.6	CFNA	07/13 ⇨ 06/15
SKODA		
FABIA I 1.2	AZQ, BME	01/03 ⇨ 03/08
FABIA I 1.4	BKY	05/04 ⇨ 12/07
FABIA I 1.4 16V	AUB, BBY, BBZ, BKY, BUD	12/99 ⇨ 03/08
OCTAVIA I 1.4 16V	BCA	08/00 ⇨ 12/10
OCTAVIA II 1.4	BCA, BUD, CGGA	05/04 ⇨ 06/13
OCTAVIA II 1.4 [CHN]	CFBA.	03/10 ⇨
OCTAVIA II 1.4 TSI	CAXA	11/08 ⇨ 06/13
OCTAVIA II 1.6 [CHN]	CDFA, CLRA, CPJA	09/07 ⇨
OCTAVIA II 1.6 FSI	BLF	02/04 ⇨ 10/08
RAPID 1.2	CGPC	07/12 ⇨ 06/15
RAPID 1.2 LPG	CGPC	07/12 ⇨ 06/15
RAPID 1.4 TSI	CAXA	07/12 ⇨ 06/15
RAPID 1.6	CFNA	07/12 ⇨ 06/15
ROOMSTER 1.2	BME, BZG, CGPA	05/06 ⇨ 05/15
ROOMSTER 1.2 LPG	CGPA	03/09 ⇨ 05/15
ROOMSTER 1.4	BXW, CGGB	09/06 ⇨ 05/15
ROOMSTER 1.4 LPG	BXW, CGGB	03/10 ⇨ 05/15
ROOMSTER 1.6	BTS, CFNA	09/06 ⇨ 05/15
ROOMSTER 1.6 LPG	BTS	06/06 ⇨ 07/10
FABIA II 1.2	BZG, CEVA, CGPA, CHTA	01/07 ⇨ 12/14
FABIA II 1.2 [IND]	CJLA	09/10 ⇨
FABIA II 1.2 12V	CGPB	11/11 ⇨ 12/14
FABIA II 1.2 LPG	CGPA	07/07 ⇨ 11/14
FABIA II 1.4	BXW, CGGB	01/07 ⇨ 12/14
FABIA II 1.4 [CHN]	CDDA	12/08 ⇨
FABIA II 1.4 LPG	BXW, CGGB	01/07 ⇨ 11/14
FABIA II 1.4 TSI RS	CAVE, CTHE	05/10 ⇨ 12/14
FABIA II 1.6	BTS, CFNA, CLSA	04/07 ⇨ 12/14
FABIA II 1.6 [CHN]	CDEA	12/08 ⇨
SUPERB II 1.4 [CHN]	CFBA.	03/10 ⇨
SUPERB II 1.4 TSI	CAXC	07/08 ⇨ 05/15
YETI 1.4 TSI	CAXA	06/10 ⇨ 05/15
VOLKSWAGEN (BR)		
POLO 1.4	BKY	07/06 ⇨
POLO 1.4 16V	BBY	09/02 ⇨
VW		
GOLF VI 1.4	BUD, CGGA, CNWA	10/08 ⇨
GOLF VI 1.4 16V	BUD, CGGA	01/09 ⇨ 05/11
GOLF VI 1.4 TSI	CAVD, CAXA, CNWA, CTHD, CTKA	10/08 ⇨
GOLF VI TSi	CAXA	10/08 ⇨ 11/12
BEETLE 1.4 TSI	CAVD, CNWA, CTHD, CTKA	10/11 ⇨ 07/16
BORA 1.4 16V	BCA	03/00 ⇨ 05/05
BORA 1.6 16V	AZD, BCB	02/00 ⇨ 05/05
BORA 1.6 FSI	BAD	01/02 ⇨ 05/05
GOLF V 1.4	BUD	06/07 ⇨ 07/09
GOLF V 1.4 16V	BCA, BUD, CGGA	10/03 ⇨ 12/13
GOLF V 1.4 FSI	BKG, BLN	10/03 ⇨ 11/06
GOLF V 1.4 TSI	BLG, BMY, CAVD, CAXA, CNWA, CTHD	11/05 ⇨ 12/13
GOLF V 1.6 FSI	BAG, BLF, BLP	10/03 ⇨ 07/08
CADDY III 1.4	BCA, BUD	03/04 ⇨ 08/10
CC 1.4 TSI	CTHD	11/11 ⇨ 12/16
CC 1.4 TSI MultiFuel	CKMA	11/11 ⇨ 12/16
EOS 1.4 TSI	CAVD, CAXA, CTHD	11/07 ⇨ 08/15
EOS 1.6 FSI	BLF	06/06 ⇨ 05/08
EOS 2.0 TFSI	BPY, BWA, CAWB, CBFA, CCTA, CCZA	03/06 ⇨ 08/15
JETTA V 1.4 TSI	BLG, BMY, CAVD, CAXA	07/06 ⇨ 10/10
JETTA V 1.6 FSI	BLF	09/05 ⇨ 10/10
PASSAT V 1.4 TSI	CAXA, CTHD	05/07 ⇨ 12/14
PASSAT V 1.4 TSI EcoFuel	CDGA	01/09 ⇨ 12/14
PASSAT V 1.4 TSI MultiFuel	CKMA	11/10 ⇨ 12/14
PASSAT V 1.6 FSI	BLF	03/05 ⇨ 06/08
GOLF IV 1.4	BCA	05/00 ⇨ 06/06
GOLF IV 1.4 16V	BCA	10/97 ⇨ 06/06
GOLF IV 1.6	AZD, BCB	05/00 ⇨ 06/06
GOLF IV 1.6 16V	AZD, BCB	02/00 ⇨ 06/06
GOLF IV 1.6 FSI	BAD, BAG	01/02 ⇨ 06/06
GOLF PLUS 1.4 TSi	CAVD, CAXA	01/09 ⇨ 08/14
JETTA VI 1.4 TSI	CAVA, CAVD, CAXA, CMSB, CTHA, CTHD	04/11 ⇨
VW		
JETTA VI 1.6	CFNA, CFNB, CLRA	12/11 ⇨
POLO IV 1.2 12V	AZQ, BME, BZG	10/01 ⇨ 11/09
POLO IV 1.4	BBY, BBZ, BKY, BMG, CDD.	11/02 ⇨
POLO IV 1.4 16V	AUB, BBY, BBZ, BKY, BUD	10/01 ⇨ 11/09
POLO IV 1.4 BiFuel	BUD	05/06 ⇨ 11/09
POLO IV 1.4 FSI	AXU	02/02 ⇨ 07/06
POLO IV 1.6	BMH, CDE.	03/06 ⇨
POLO IV 1.6 16V	BTS	05/06 ⇨ 11/09
LUPO 1.4 16V	BBY	09/98 ⇨ 07/05
NEW BEETLE 1.4	BCA	11/01 ⇨ 09/10
POLO V 1.2	CGPA, CGPB	03/09 ⇨
POLO V 1.2 [IND]	CJLA	08/11 ⇨
POLO V 1.2 BlueMotion	CGPA	03/09 ⇨ 05/14
POLO V 1.4	CDDA, CGGB, CLPA	03/09 ⇨ 05/14
POLO V 1.4 BiFuel	CMAA	03/10 ⇨ 01/11
POLO V 1.4 GTI	CAVE, CTHE	05/10 ⇨
POLO V 1.6	CFNA, CFNB, CLSA	01/10 ⇨
POLO V 1.6 BiFuel	CNKA	01/11 ⇨ 05/14
PASSAT 1.4 TSi BlueMotion	CAXA	08/10 ⇨ 12/14
SCIROCCO III 1.4 TSI	CAVD, CAXA, CMSB, CNWA, CTHD, CTKA	05/08 ⇨ 11/17
SHARAN II 1.4 TSI	CAVA, CTHA	05/10 ⇨
PASSAT CC 1.4 TSI MultiFuel	CKMA	01/11 ⇨ 01/12
TIGUAN I 1.4 [CHN]	CFBA.	11/11 ⇨
TIGUAN I 1.4 TSI	BWK, CAVA, CAVD, CAXA, CTHD	05/08 ⇨ 07/18
TIGUAN I 1.4 TSI 4motion	BWK, CAVA, CAVD, CTHD	09/07 ⇨ 07/18
TOURAN I 1.4 [CHN]	CFBA.	04/09 ⇨
TOURAN I 1.4 TSI	BLG, BMY, CAVB, CAVC, CTHB, CTHC	02/06 ⇨ 05/15
TOURAN I 1.4 TSI EcoFuel	CDGA	05/09 ⇨ 05/15
TOURAN I 1.6 FSI	BAG, BLF, BLP	02/03 ⇨ 01/07
TOURAN I FSI	BAG, BLF, BLP	02/03 ⇨ 11/06

FACET **9.6375** 05,5

COILS

Adatt./Suitable:

BMW
12 13 0 148 594
12 13 0 390 064
12 13 1 712 219
12 13 1 712 223
12 13 5 A06 753
12 13 7 523 345
12 13 7 548 553
12 13 7 550 012
12 13 7 551 049
12 13 7 551 260
12 13 7 562 744
12 13 7 571 643
12 13 7 575 010
12 13 7 594 596
12 13 7 594 936
12 13 7 594 937
12 13 7 594 938
12 13 8 611 236
12 13 8 616 153
12 13 8 647 689
12 13 8 657 273
5 575 010
7 548 553
7 551 049
7 571 643
7 594 596
7 594 936
8 611 236
8 616 153
8 647 689

BOSCH
0 221 504 100
0 221 504 463
0 221 504 464
0 221 504 465
0 221 504 467
0 221 504 470
0 221 504 800

CITROËN
5970 64
5970 91
98 067 027 80
98 078 418 80

DS
5970 91

GENERAL MOTORS
3 648 847

HITACHI
133825
133875
134046
134047
134049
2503825
2503875
2504046
2504047
2504049

MAGNETI MARELLI
060717114012
060717115012
060717116012
060717152012

MINI
12 13 5 A06 753
12 13 7 550 012
12 13 7 551 049
12 13 7 562 744
12 13 7 571 643
12 13 7 575 010
12 13 7 594 596
12 13 7 594 937
12 13 7 594 938
12 13 8 616 153
12 13 8 657 273
7 571 643

OPEL
3648847
5 97 091

PEUGEOT
5970 64
5970 91
98 067 027 80
98 078 418 80

ROLLS-ROYCE
12 13 5 A06 753
12 13 7 571 643
12 13 7 594 937
12 13 7 594 938
12 13 8 616 153
12 13 8 647 689
12 13 8 657 273

VAUXHALL
5 97 091

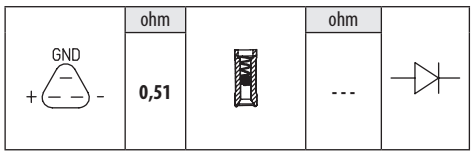

ALPINA		
B6 4.4 Biturbo 4x4 [USA]	N63M20A	03/14 ⇨
B7 4.4 BiTurbo [USA]	N63M20A	01/11 ⇨
B7 4.4 BiTurbo 4x4 [USA]	N63M20A	01/12 ⇨
B7 BITURBO	N63M10A	03/09 ⇨ 06/12
B7 BITURBO Trazione integrale	N63M10A	09/10 ⇨ 06/12
BMW		
1 I 116 i	N45B16A	06/04 ⇨ 12/11
1 I 118 i	N46B20B	07/04 ⇨ 12/13
1 I 120 i	N46B20B, N46B20BD, N46B20C	06/04 ⇨ 12/13
1 I 125 i	N52B30A, N52B30B, N52B30BF	10/07 ⇨
1 I 128 i	N51B30A, N52B30A	12/07 ⇨
1 I 130 i	N52B30A, N52B30B, N52B30BF	09/05 ⇨ 12/11
1 I 135 i	N54B30A, N55B30A	10/07 ⇨ 12/13
1 I M	N54B30A	03/11 ⇨ 06/12
3 VI 316 i	N13B16A	07/12 ⇨ 08/16
3 VI 316 Li [CHN]	N13B16A	10/12 ⇨
3 VI 320 i	N13B16A, N20B20A, N20B20B	03/12 ⇨ 10/18
3 VI 320 i xDrive	N20B20A, N20B20B	07/12 ⇨ 10/18
3 VI 320 Li [CHN]	--	02/12 ⇨
3 VI 328 i	N20B20A, N26B20A	11/11 ⇨ 10/18
3 VI 328 i xDrive	N20B20A, N26B20A	07/12 ⇨ 08/16
3 VI 328 i xDrive [USA]	--	10/11 ⇨
3 VI 328 Li [CHN]	N20B20A	10/11 ⇨
3 VI 328 Li xDrive [CHN]	--	10/11 ⇨
3 VI 328i	N20B20A	11/11 ⇨ 06/15
3 VI 335 i	N55B30A	11/11 ⇨ 06/16
3 VI 335 i xDrive	N55B30A	07/12 ⇨ 06/16
3 VI ActiveHybrid	N55B30A	07/12 ⇨ 06/15
3 VI M3	S55B30A	03/14 ⇨ 10/18
3 VI M3 Competition	S55B30A	03/16 ⇨ 10/18
3 VI M3 CS	S55B30A	01/18 ⇨ 10/18
1 II 114 i	N13B16A	12/11 ⇨
1 II 116 i	N13B16A	07/11 ⇨
1 II 118 i	N13B16A	07/11 ⇨
1 II 120 i	N13B16A	03/15 ⇨
1 II 125 i	N20B20A	12/11 ⇨
1 II 125 i Active Flex	N20B20A	11/14 ⇨ 11/17
1 II M 135 i	N55B30A	12/11 ⇨
1 II M 135 i xDrive	N55B30A	02/12 ⇨
2 220 i	N20B20A, N20B20B	10/13 ⇨
2 228 i	N20B20A	07/14 ⇨
2 M 235 i	N55B30A	10/13 ⇨
2 M 235 i xDrive	N55B30A	07/14 ⇨
2 M2	N55B30A	11/15 ⇨ 06/18
2 M2 Competition	S55B30A	06/18 ⇨
2 M2 CS	S55B30A	11/19 ⇨
3 V 316 i	N45B16A	09/05 ⇨ 10/11
3 V 318 i	N46B20B	09/05 ⇨ 03/12
3 V 320 i	N46B20A, N46B20B, N46B20C, N46B20CB	12/04 ⇨ 12/13
3 V 320 si	N45B20A	09/05 ⇨ 08/06
3 V 323 i	N52B25A, N52B25B, N52B25BE, N52B25BF, N52B25B, N52B25BE, N52NB25BF	09/05 ⇨
3 V 325 i	N52B25A, N52B25AF, N52B25B, N52B25BF, N52B25B	12/04 ⇨
3 V 325 i xDrive	N52B25A	03/10 ⇨ 04/13
3 V 325 xi	N52B25A, N52B30A	01/05 ⇨
3 V 328 i	N51B30A, N52B30A, N52NB30A	07/05 ⇨
3 V 328 xi	N51B30A, N52B30A	09/06 ⇨
3 V 330 i	N52B30A, N52B30B, N52B30BF, N53B30A	12/04 ⇨ 10/13
3 V 330 xi	N52B30A	09/05 ⇨ 02/10
3 V 335 i	N54B30A, N54B30B, N55B30A	03/06 ⇨ 10/13
3 V 335 i xDrive	N54B30A, N55B30A	05/08 ⇨ 12/13
3 V 335 xi	N54B30A, N55B30A	09/06 ⇨ 02/10
3 SERIES 325i xDrive	N52B25A	09/08 ⇨ 10/11
4 420 i	N20B20A, N20B20B	11/13 ⇨ 02/17
4 420 i xDrive	N20B20A, N20B20B	11/13 ⇨ 02/16
4 428 i	N20B20A, N26B20A	07/13 ⇨ 02/17
4 428 i xDrive	N20B20A, N26B20A	07/13 ⇨ 02/16
4 435 i	N55B30A	07/13 ⇨ 02/16
4 435 i xDrive	N55B30A	07/13 ⇨ 02/16
4 M4	S55B30A	03/14 ⇨
4 M4 Competition	S55B30A	03/16 ⇨
4 M4 CS	S55B30A	07/17 ⇨ 06/19
4 M4 GTS	S55B30A	03/16 ⇨ 02/17
X5 III M	S63B44B	12/14 ⇨ 07/18
X5 III sDrive 35 i [USA]	N55B30A	01/13 ⇨
X5 III xDrive 28 i	N20B20A	06/15 ⇨ 07/18
X5 III xDrive 35 i	N55B30A	12/13 ⇨ 07/18
X5 III xDrive 40e	N20B20A	08/15 ⇨ 07/18
X5 III xDrive 50 i	N63B44B	08/13 ⇨ 07/18

BMW		
X5 III xDrive 50i	N63B40A	07/13 ⇨
3 IV 316 Ci	N40B16A, N45B16A	10/01 ⇨
3 IV 316 i	N40B16A, N42B18A, N45B16A, N46B18A	02/02 ⇨ 02/05
3 IV 316 ti	N40B16A, N42B18A, N45B16A, N46B18A	06/01 ⇨ 02/05
3 IV 318 Ci	N42B20A, N46B20A, N46B20B, N46B20C	12/00 ⇨ 12/07
3 IV 318 i	N42B20A, N46B20A, N46B20C	09/01 ⇨ 07/05
3 IV 318 ti	N42B20A, N46B20A	03/01 ⇨ 12/04
3 IV 320 Ci	M52B20(206S4), M54B22(226S1), M54B226S1	01/00 ⇨ 12/07
3 IV 320 i	4F8Q636, M52B20(206S4), M54B22(226S1), M54B226S1	09/00 ⇨ 02/05
3 IV 325 Ci	4CSS, M54B25(256S5), M54B256S5, M56256S6	09/00 ⇨
3 IV 325 i	-(246S4), M54B25(256S5), M54B256S5, M56256S6	09/00 ⇨
3 IV 325 ti	M54B25(256S5), M54B256S5	04/01 ⇨ 12/04
3 IV 325 xi	M54B25(256S5), M54B256S5	09/00 ⇨ 02/05
3 IV 330 Ci	7ACR, M54B30(306S3), M54B306S3	06/00 ⇨ 08/06
3 IV 330 i	M54B30(306S3), M54B306S3	06/00 ⇨ 04/05
3 IV 330 xi	M54B30(306S3), M54B306S3	06/00 ⇨ 07/06
3 IV M3	S54B32(326S4), S54B326S4	07/00 ⇨ 08/06
3 IV M3 CSL	S54B32(326S4), S54B326S4	05/03 ⇨ 12/03
5 IV 520 i	M54B22(226S1), M54B226S1	09/00 ⇨ 12/03
5 IV 525 i	8CUG, M54B25(256S5), M54B256S5	09/00 ⇨ 05/04
5 IV 530 i	2CBL, M54B30(306S3), M54B306S3	09/00 ⇨ 12/03
5 VII M 550 i xDrive	N63B44C	03/17 ⇨ 06/19
5 VII M5	S63B44B	09/17 ⇨
5 VII M5 Competition	S63B44B	07/18 ⇨
5 VII M5 CS	S63B44B	03/21 ⇨
5 VI 520 i	N20B16A, N20B20A, N20B20B	10/10 ⇨ 02/17
5 VI 520Li [CHN]	N20B20D	01/09 ⇨
5 VI 523 i	N52B25A, N52B25AF, N52B25B, N52B25BF	11/09 ⇨ 08/11
5 VI 523Li [CHN]	N52B25AF	01/09 ⇨
5 VI 525 d	N47D20D(N47S1)	09/11 ⇨ 10/16
5 VI 525Li [CHN]	N20B20A	09/11 ⇨
5 VI 528 i	N20B20A, N52B30BF	03/10 ⇨
5 VI 528 i xDrive	N20B20A	09/11 ⇨ 02/17
5 VI 528Li [CHN]	N20B20C	09/10 ⇨
5 VI 530 Hybrid [CHN]	--	01/13 ⇨
5 VI 530 i	N52B30A, N52B30AF, N52B30BF	03/10 ⇨ 06/13
5 VI 530Li [CHN]	N52B30AF	09/10 ⇨
5 VI 535 i	N55B30A	01/10 ⇨ 02/17
5 VI 535 i xDrive	N55B30A	03/11 ⇨ 02/17
5 VI 535Li [CHN]	N55B30A	01/09 ⇨
5 VI 550 i	N63B44A, N63B44B	03/10 ⇨ 02/17
5 VI 550 i xDrive	N63B44A, N63B44B	08/10 ⇨ 10/16
5 VI ActiveHybrid	N55B30A	12/11 ⇨ 10/16
5 VI M5	S63B44B	09/11 ⇨ 10/16
5 VI M5 30th Anniversary	S63B44B	07/14 ⇨ 10/16
5 VI M5 Competition	S63B44B	02/13 ⇨ 10/16
X3 II sDrive 20 i	N20B16A, N20B20A	04/14 ⇨ 08/17
X3 II sDrive 28 i [USA]	N20B20A	01/13 ⇨
X3 II xDrive 20 i	N20B20A	10/11 ⇨ 08/17
X3 II xDrive 28 i	N20B20A, N52B30A, N52B30AF, N52B30BF	01/11 ⇨ 08/17
X3 II xDrive 35 i	N55B30A	09/10 ⇨ 08/17
6 II 630 i	N52B30A, N52B30B, N52B30BF	09/04 ⇨ 08/10
6 II 645 Ci	N62B44A	09/03 ⇨ 08/05
6 II 650 i	N62B48B	09/05 ⇨ 08/10
5 V 520 i	M54226S1, M54B22(226S1), M54B226S1, N46B20B	07/03 ⇨
5 V 520Li	N46B20B, N46B20C	09/07 ⇨
5 V 523 i	N52B25A, N52B25B, N52B25BE, N52B25BF, N52B25B	10/04 ⇨
5 V 523Li	N52B25A, N52B25B, N52B25BE	07/05 ⇨
5 V 525 i	M54B25(256S5), M54B256S5, N52B25A, N52B25B, N52B25BF, N52B30A, N52B30B, N52B30BF, N52B25B	09/03 ⇨
5 V 525 xi	N52B25A, N52B30A, N53B30A	04/05 ⇨
5 V 525Li	N52B25A, N52B25BF, N52B25B	07/05 ⇨
5 V 528 xi	N52B30A	03/07 ⇨

BMW		
5 V 530 i	3CA4GB16, M54306S3, M54B30(306S3), N52B30A, N52B30BF, N53B30A	12/01 ⇨
5 V 530 xi	N52B30A	09/04 ⇨ 05/10
5 V 530Li	N52B30A, N52B30B, N52B30BF	07/05 ⇨
5 V 535 i	N54B30A	04/06 ⇨ 12/09
5 V 535xi	N54B30A	03/07 ⇨
5 V 540 i	N62B40A	09/05 ⇨ 12/09
5 V 545 i	N62B44A	09/03 ⇨ 12/10
5 V 550 i	N62B48A, N62B48B	07/05 ⇨ 12/10
6 III 640 i	N55B30A	07/11 ⇨ 10/18
6 III 640 i xDrive	N55B30A	03/13 ⇨ 10/18
6 III 650 i	N63B44A, N63B44B	12/10 ⇨ 10/18
6 III 650 i xDrive	N63B40A, N63B44A, N63B44B	09/11 ⇨
6 III 650 i xDrive 4.0	N63B40A	06/11 ⇨
6 III M6	S63B44B	03/12 ⇨ 10/18
6 III M6 Competition	S63B44B	07/13 ⇨ 10/18
Z4 II sDrive30i	N52B30B, N52B30BF	05/09 ⇨
7 V 730 i, Li	N52B30A, N52B30AF, N52B30BF	09/09 ⇨ 06/15
7 V 740 i, Li	N54B30A, N55B30A	09/08 ⇨ 12/15
7 V 740 i, Li xDrive	N55B30A	07/12 ⇨ 12/15
7 V 750 i, Li	N63B44A, N63B44B	09/08 ⇨ 06/15
7 V 750 i, Li xDrive	N63B44A, N63B44B	09/09 ⇨ 06/15
7 V 750Li xDrive	N63B40A	01/11 ⇨
7 V 760 i, Li	N74B60A	09/09 ⇨ 12/15
7 V ActiveHybrid 7	N55B30A, N63B44A	04/10 ⇨ 06/15
8 M8	S63B44B	07/19 ⇨
8 M8 Competition	S63B44B	07/19 ⇨
X3 I 2.0 i	N46B20B	07/05 ⇨ 08/08
X3 I 2.5 i	M54B25(256S5), M54B256S5	03/04 ⇨ 07/06
X3 I 2.5 si	N52B25A, N52B25AF, N52B25BF	08/06 ⇨ 08/08
X3 I 2.5 si xDrive	N52B25A, N52B25AF, N52B25BF	08/06 ⇨ 08/08
X3 I 3.0 i xDrive	M54B30(306S3), M54B306S3	09/03 ⇨ 07/06
X3 I 3.0 si	N52B30A, N52B30BF, N52KB30	08/06 ⇨ 08/08
X3 I xDrive 2.5si	N52B25BF	09/06 ⇨
X3 I xDrive 20 i	N46B20B	09/08 ⇨ 08/11
X3 I xDrive 25 i	N52B25A, N52B25AF, N52B25BF	09/08 ⇨ 08/10
X3 I xDrive 3.0si	N52B30B	09/06 ⇨
X3 I xDrive 30 i	N52B30A, N52B30BF	09/08 ⇨ 08/10
7 IV 730 i, Li	1CYA, M54B30(306S3), N52B30A, N52B30BF	03/03 ⇨ 08/08
7 IV 730 i,Li	N52B30B	03/05 ⇨
7 IV 735 i, Li	N62B36A	11/01 ⇨ 02/05
7 IV 740 i, Li	N62B40A	03/05 ⇨ 08/08
7 IV 745 i, Li	N62B44A	07/01 ⇨ 03/05
7 IV 750 i, Li	N62B48B	03/05 ⇨ 08/08
7 IV 760 i, Li	N73B60A, N73B60B	01/03 ⇨ 08/08
7 IV B7 Alpina	H1	01/06 ⇨
X6 II 35 i [USA]	N55B30A	08/14 ⇨
X6 II M	S63B44B	12/14 ⇨ 07/19
X6 II xDrive 35 i	N55B30A	08/14 ⇨ 07/19
X6 II xDrive 50 i	N63B40A, N63B44B	08/14 ⇨
X6 II xDrive 50 i [USA]	N63B44B	08/14 ⇨
X1 I sDrive 16 i	N20B16A	03/13 ⇨ 06/15
X1 I sDrive 18 i	N46B20B, N46B20BD	03/10 ⇨ 06/15
X1 I sDrive 18 i [CHN]	N20B20C	01/13 ⇨
X1 I sDrive 20 i	N20B20A	09/11 ⇨ 06/15
X1 I sDrive 28 i [USA]	N20B20A	01/09 ⇨
X1 I xDrive 20 i	N20B20A	09/11 ⇨ 06/15
X1 I xDrive 25 i	N52B30A	03/10 ⇨ 08/11
X1 I xDrive 28 i	N20B20A, N52B30A	09/09 ⇨ 06/15
X1 I xDrive 35 i	N55B30A	03/11 ⇨ 06/15
7 VI 750 i, Li	N63B44C	11/15 ⇨ 02/19
7 VI 750 i, Li xDrive	N63B44C	09/15 ⇨ 02/19
7 VI 750 Li xDrive	N63B40B	03/16 ⇨
7 VI M 760 i, Li xDrive	N74B66B	12/16 ⇨ 02/19
7 VI M 760 Li xDrive	N74B66C	03/19 ⇨
X4 I M 40 i	N55B30A	12/15 ⇨ 03/18
X4 I xDrive 20 i	N20B20A	04/14 ⇨ 03/18
X4 I xDrive 28 i	N20B20A	04/14 ⇨ 03/18
X4 I xDrive 35 i	N55B30A	04/14 ⇨ 03/18
X5 II 3.0 si	N52B30A, N52B30AF, N52B30B, N52B30BF	10/06 ⇨ 09/08
X5 II 4.8 i xDrive	N62B48B	10/06 ⇨ 09/08
X5 II M	S63B44A	07/09 ⇨ 07/13
X5 II xDrive 30 i	N52B30A	02/07 ⇨ 12/12
X5 II xDrive 35 i	N55B30A	04/10 ⇨ 07/13
X5 II xDrive 40 i	N55B30A	01/12 ⇨ 06/13
X5 II xDrive 48 i	N62B48B	10/08 ⇨ 03/10
X5 II xDrive 50 i	N63B44A	04/10 ⇨ 07/13
X5 IV M	S63B44B	12/19 ⇨
X5 IV M Competition	S63B44B	12/19 ⇨
X5 IV xDrive 50 i	N63B44D	08/18 ⇨

BMW		
X6 I 35 i	N54B30A	05/08 ⇨ 08/08
X6 I 50 i	N63B44A	05/08 ⇨ 06/14
X6 I ActiveHybrid	N63B44A	01/09 ⇨ 10/11
X6 I ActiveHybrid xDrive	N63B44A	01/09 ⇨ 10/11
X6 I M	S63B44A	07/09 ⇨ 07/14
X6 I xDrive 35 i	N54B30A, N55B30A	06/07 ⇨ 07/14
X6 I xDrive 40 i	N55B30A	01/12 ⇨
X6 I xDrive 50 i	N63B44A	10/07 ⇨ 07/14
X6 III M	S63B44B	12/19 ⇨
X6 III M Competition	S63B44B	12/19 ⇨
X7 xDrive M 50 i	N63B44D	07/19 ⇨
Z3 M	S54B32(326S4)	06/01 ⇨ 06/03
Z3 M 3.2	S54B32(326S4)	06/01 ⇨ 01/03
Z4 I 2.0 i	N46B20A	03/05 ⇨ 02/09
Z4 I 2.2 i	M54B22(226S1)	10/03 ⇨ 10/05
Z4 I 2.5 i	M54B25(256S5), N52B25B	12/02 ⇨
Z4 I 2.5 si	N52B25B	01/06 ⇨
Z4 I 3.0 i	M54B30(306S3), N52B30A	12/02 ⇨
Z4 I 3.0 si	N52B30B	01/06 ⇨
Z4 I M	S54B32(326S4)	01/06 ⇨ 08/08
5 VI GT 528 i	N20B20A	07/13 ⇨ 02/17
5 VI GT 535 i	N55B30A	01/09 ⇨ 02/17
5 VI GT 535 i xDrive	N55B30A	09/10 ⇨ 02/17
5 VI GT 550 i	N63B44A, N63B44B	08/09 ⇨ 02/17
5 VI GT 550 i xDrive	N63B40A, N63B44A, N63B44B	06/10 ⇨ 02/17
X5 I 3.0 i	5CNG, M54B30(306S3)	04/00 ⇨ 12/06
X5 I 4.4 i	N62B44, N62B44A	10/03 ⇨ 10/06
X5 I 4.8 is	N62B48A	04/04 ⇨ 09/06

CITROËN		
C4 PICASSO II 1.6 THP 150	5FX(EP6DT)	09/14 ⇨
C4 PICASSO II 1.6 THP 155	5FV(EP6CDT)	02/13 ⇨
C4 PICASSO II 1.6 THP 165	5GZ(EP6FDT)	07/14 ⇨
C4 PICASSO II 1.6 VTi 120	5FS(EP6C)	02/13 ⇨
C4 PICASSO II THP 155	5FV(EP6CDT)	02/13 ⇨
C4 PICASSO II VTi 120	5FS(EP6C)	02/13 ⇨
C4 PICASSO I 1.6 16V	5FX(EP6DT)	07/08 ⇨ 08/13
C4 PICASSO I 1.6 THP 140	5FT(EP6DT)	07/08 ⇨ 08/13
C4 PICASSO I 1.6 THP 155	5FV(EP6CDT)	09/10 ⇨ 08/13
C4 PICASSO I 1.6 VTi 120	5FW(EP6), EP6C	07/08 ⇨
C3 PICASSO 1.4	EP3C	02/09 ⇨
C3 PICASSO 1.4 VTi 95	8FN(EP3), 8FP(EP3C), 8FS(EP3)	02/09 ⇨
C3 PICASSO 1.4 VTi 95 LPG	8FN(EP3)	01/12 ⇨
C3 PICASSO 1.6 VTi	5FP(EP6)	07/09 ⇨
C3 PICASSO 1.6 VTi 120	5FS(EP6C), 5FW(EP6)	02/09 ⇨
C4 I 1.6 THP	5FT(EP6DT)	06/08 ⇨ 07/11
C4 I 1.6 THP 140	5FT(EP6DT)	07/08 ⇨ 07/11
C4 I 1.6 THP 150	5FX(EP6DT)	07/08 ⇨ 07/11
C4 I 1.6 VTi 120	5FW(EP6)	07/08 ⇨ 07/11
C3 II 1.4 16V	EP3C	11/09 ⇨
C3 II 1.4 LPG	8FN(EP3)	06/13 ⇨
C3 II 1.4 VTi	8FR(EP3)	11/09 ⇨
C3 II 1.4 VTi 95	8FP(EP3C)	11/09 ⇨
C3 II 1.6 VTi 120	5FS(EP6C)	11/09 ⇨
C4 II 1.4 16V	EP3C	11/09 ⇨
C4 II 1.4 VTi 95	8FP(EP3C)	11/09 ⇨
C4 II 1.6 16V	EP6FDTX	10/10 ⇨
C4 II 1.6 THP 155	5FV(EP6CDT)	11/09 ⇨ 12/16
C4 II 1.6 VTi 120	5FS(EP6C)	11/09 ⇨ 12/16
C4 II 1.6 VTi 120 LPG	5FS(EP6C)	09/11 ⇨
C4 III 1.6 THP 165	5GZ(EP6FDT)	04/18 ⇨
C5 II 1.6 THP 150	5FN(EP6CDT)	04/09 ⇨
C5 II 1.6 THP 155	5FV(EP6CDT)	04/09 ⇨
C5 II 1.6 VTI 120	5FS(EP6C)	07/10 ⇨
BERLINGO II 1.6 VTi 120	5FS(EP6C)	11/09 ⇨
BERLINGO II 1.6 VTi 95	5FK(EP6CB)	07/10 ⇨
C5 AIRCROSS 1.6 Hybrid	5GF(EP6FADTXD)	04/20 ⇨
C5 AIRCROSS 1.6 PureTech 180	5GF(EP6FADTXD)	11/18 ⇨
C5 AIRCROSS 1.6 THP 150	5GX(EP6FDTMD)	09/19 ⇨
C5 AIRCROSS 1.6 THP 165	5GY(EP6FDTM)	05/19 ⇨
C4 GRAND PICASSO I 1.6 16V	5FT(EP6DT), 5FX(EP6DT), EP6C	07/08 ⇨
C4 GRAND PICASSO I 1.6 THP 155	5FV(EP6CDT)	09/10 ⇨ 08/13
C4 GRAND PICASSO I 1.6 VTi 120	5FW(EP6)	07/08 ⇨ 08/13
C4 GRAND PICASSO II 1.6 THP 150	5FX(EP6DT)	09/14 ⇨
C4 GRAND PICASSO II 1.6 THP 155	5FV(EP6CDT)	09/13 ⇨
C4 GRAND PICASSO II 1.6 THP 165	5GZ(EP6FDT)	07/14 ⇨
C4 GRAND PICASSO II 1.6 VTi 120	5FS(EP6C)	09/13 ⇨
DS3 1.4 VTi 95	8FP(EP3C)	04/10 ⇨ 07/15
DS3 1.4 VTi 95 LPG	8FR(EP3C)	08/12 ⇨ 07/15

CITROËN		
DS3 1.4 VTi 98	8FR(EP3C)	11/09 ⇨ 07/15
DS3 1.6	5GM(EP6FDTX)	02/11 ⇨ 07/15
DS3 1.6 Racing	5FD(EP6DTS), 5FF(EP6DTS)	02/11 ⇨ 07/15
DS3 1.6 THP 150	5FN(EP6CDT), 5FX(EP6DT)	01/10 ⇨ 07/15
DS3 1.6 THP 155	5FR(EP6DT), 5FV(EP6CDT)	04/10 ⇨ 07/15
DS3 1.6 THP 165	5GZ(EP6FDT)	10/14 ⇨ 07/15
DS3 1.6 VTi 120	5FS(EP6C)	04/10 ⇨ 07/15
DS4 1.6 THP 150	5FE(EP6CDTMD)	04/11 ⇨ 07/15
DS4 1.6 THP 155	5FV(EP6CDT)	04/11 ⇨ 07/15
DS4 1.6 THP 160	5FM(EP6CDTM)	04/12 ⇨ 07/15
DS4 1.6 THP 165	5FM(EP6CDTM), 5FM(EP6DT), 5GZ(EP6FDT)	01/12 ⇨ 07/15
DS4 1.6 THP 200	5FU(EP6DTX)	04/11 ⇨ 07/15
DS4 1.6 THP 210	5GM(EP6FDTX)	07/15 ⇨ 07/15
DS4 1.6 VTi 120	5FS(EP6C)	04/11 ⇨ 07/15
DS5 1.6 THP 150	5FE(EP6CDTMD)	11/11 ⇨ 07/15
DS5 1.6 THP 155	5FV(EP6CDT)	11/11 ⇨ 07/15
DS5 1.6 THP 165	5FM(EP6CDTM), 5FM(EP6DT), 5GZ(EP6FDT)	01/12 ⇨ 07/15
DS5 1.6 THP 165 Hybrid	5GZ(EP6FDT)	06/12 ⇨ 07/15
DS5 1.6 THP 200	5FU(EP6DTX)	11/11 ⇨ 07/15
DS5 1.6 THP 210	5GM(EP6FDTX)	11/14 ⇨ 07/15
GRAND C4 SPACETOURER 1.6 PureTech 180	5GF(EP6FADTXD)	04/18 ⇨
GRAND C4 SPACETOURER 1.6 THP 165	5GX(EP6FDTMD), 5GZ(EP6FDT)	04/18 ⇨

DS		
DS 4 PureTech 180	5GF(EP6FADTXD)	10/21 ⇨
DS 5 1.6 THP 165	5GZ(EP6FDT)	07/15 ⇨ 12/18
DS 5 1.6 THP 210	5GM(EP6FDTX)	04/15 ⇨ 12/18
DS 7 1.6 PureTech 180	5GF(EP6FADTXD)	04/18 ⇨
DS 7 1.6 PureTech 225	5GC(EP6FADTX)	09/17 ⇨
DS 7 E-TENSE	5GQ(EP6FADTXHP)	10/19 ⇨
DS 7 E-TENSE 225	5GQ(EP6FADTXHP)	05/21 ⇨
DS 7 E-TENSE 4x4	5GB(EP6FADTXHP)	05/19 ⇨
DS3 1.6 THP	5GW(EP6FDT), 5GX(EP6FDTMD), 5GZ(EP6FDT)	07/15 ⇨ 07/19
DS3 1.6 THP 165	5GZ(EP6FDT)	07/15 ⇨ 07/19
DS3 1.6 THP 208	5GR(EP6FDTX)	09/15 ⇨ 07/19
DS4 / DS4 CROSSBACK 1.6 THP 150	5FE(EP6CDTMD)	10/16 ⇨ 12/18
DS4 / DS4 CROSSBACK 1.6 THP 160	5FM(EP6CDTM)	07/15 ⇨ 12/18
DS4 / DS4 CROSSBACK 1.6 THP 165	5GZ(EP6FDT)	07/15 ⇨ 12/18
DS4 / DS4 CROSSBACK 1.6 THP 210	5GM(EP6FDTX)	07/15 ⇨ 12/18

MINI		
MINI II Cooper	N12B16A, N12B16BA, N16B16A	09/06 ⇨ 10/16
MINI II Cooper ALL4	N16B16A, N18B16A	11/12 ⇨ 10/16
MINI II Cooper S	N14B16A, N14B16AB, N18B16A	10/06 ⇨ 10/16
MINI II Cooper S ALL4	N18B16A	08/10 ⇨ 10/16
MINI II Cooper S JCW	N18B16A	12/10 ⇨ 04/15
MINI II Cooper S John Cooper Works	N14B16AB, N14B16C, N18B16A	11/06 ⇨ 11/13
MINI II John Cooper Works	N14B16C, N18B16C	11/07 ⇨ 05/15
MINI II John Cooper Works ALL4	N18B16C	11/12 ⇨ 10/16
MINI II John Cooper Works GP	N14B16C, N18B16C	09/12 ⇨ 11/13
MINI II John Cooper Worls ALL4	N18B16C	11/12 ⇨
MINI II One	N12B14A, N16B16A	11/06 ⇨ 10/16
MINI II One LPG	N12B14A	03/09 ⇨ 03/10

OPEL		
GRANDLAND / GRANDLAND X 1.6 Turbo	A16XHL(EP6FDTMD), D16XHT(EP6FADTXD)	09/18 ⇨
GRANDLAND / GRANDLAND X 1.6 Turbo Hybrid	F16XHR(EP6FADTXD)	12/19 ⇨
GRANDLAND / GRANDLAND X 1.6 Turbo Hybrid4	F16XHR(EP6FADTXD)	06/19 ⇨

PEUGEOT		
207 1.4 16V	8FR(EP3), 8FS(EP3), EP3, EP3C	06/07 ⇨ 10/13
207 1.6 16V	5FS(EP6C), 5FW(EP6), EP6	06/07 ⇨ 10/13
207 1.6 16V RC	5FY(EP6DTS)	02/07 ⇨ 12/12
207 1.6 16V Turbo	5FR(EP6DT), 5FX(EP6DT)	02/06 ⇨ 10/13
207 1.6 16V VTi	5FS(EP6C), 5FW(EP6), EP6	02/07 ⇨ 12/12
207 1.6 VTi	5FW(EP6)	03/07 ⇨ 12/12
207 CC 1.6 16V	5FS(EP6C), 5FW(EP6), EP6	02/07 ⇨ 10/13
207 CC 1.6 16V Turbo	5FR(EP6DT), 5FV(EP6CDT), 5FX(EP6DT)	02/07 ⇨ 12/13
308 I 1.4 16V	8FR(EP3), 8FS(EP3), EP3, EP3C	09/07 ⇨
308 I 1.6 16V	5FS(EP6C), 5FT(EP6DT), 5FV(EP6CDT), 5FW(EP6), 5FX(EP6DT), 5FY(EP6DTS), EP6, EP6C	09/07 ⇨
308 I 1.6 GTi	EP6CDTX	07/10 ⇨ 10/14

PEUGEOT		
308 I 1.6 THP	EP6CDTM, EP6CDTMD, EP6CDTX	10/10 ⇨
308 I 1.6 THP 16V	5FV(EP6CDT)	10/09 ⇨ 10/14
208 I 1.4 GPL	EP3C	10/13 ⇨
208 I 1.4 VTi	8FS(EP3), EP3C	03/12 ⇨
208 I 1.6	5FS(EP6C), 5FV(EP6CDT), 5GZ(EP6FDT)	02/12 ⇨
208 I 1.6 GTi	5FU(EP6CDTX), 9H92	08/12 ⇨
208 I 1.6 THP 165	5GZ(EP6FDT)	03/15 ⇨
208 I 1.6 THP 210	5GM(EP6FDTX)	04/15 ⇨
308 II 1.6	5GZ(EP6FDT)	01/12 ⇨
308 II 1.6 GT 205	3AC	06/14 ⇨ 06/21
308 II 1.6 GTi	5GN(EP6FDTR), 6AAS	06/15 ⇨ 06/21
308 II 1.6 GTi PureTech 263	EGX(EP6FADTR)	07/18 ⇨ 06/21
308 II 1.6 PureTech 225	5GG(EP6FADTX)	01/18 ⇨ 06/21
308 II 1.6 THP	5FV(EP6CDT), 5GX(EP6FDTMD)	09/13 ⇨ 06/21
308 II 1.6 THP 125	5FA(EP6CDT)	09/13 ⇨ 06/21
308 II 1.6 THP 150	5GX(EP6FDTMD)	03/14 ⇨ 06/21
308 II 1.6 THP 155	5FV(EP6CDT)	03/14 ⇨ 06/21
308 II 1.6 THP 163	5FM(EP6CDTM)	06/14 ⇨ 06/21
308 II 1.6 THP 210	5GM(EP6FDTX)	04/15 ⇨
508 I 1.6	5GZ(EP6FDT)	02/12 ⇨ 12/18
508 I 1.6 THP	5FE(EP6CDTM), 5FN(EP6CDT), 5FV(EP6CDT), 5GZ(EP6FDT), EP6CDTM	11/10 ⇨
508 I 1.6 VTi	5FH(EP6C), 5FS(EP6C)	11/10 ⇨ 12/18
508 II 1.6 PureTech 180	5GF(EP6FADTXD)	09/18 ⇨
508 II 1.6 PureTech 225	5GG(EP6FADTX)	09/18 ⇨
508 II 1.6 THP 150	5GX(EP6FDTMD)	09/18 ⇨
508 II 1.6 THP 165	5GY(EP6FDTM)	09/18 ⇨
508 II Hybrid 224	5GQ(EP6FADTXHPD)	08/19 ⇨
508 II Hybrid 225	5GQ(EP6FADTXHPD)	08/19 ⇨
2008 I 1.6 VTi	5FS(EP6C)	03/13 ⇨
3008 I 1.6 THP	5FE(EP6CDTM), 5FE(EP6CDTMD), 5FM(EP6CDTM), 5FV(EP6CDT), 5FX(EP6DT), EP6CDTM, EP6CDTMD	06/09 ⇨
3008 I 1.6 VTi	EP6	06/09 ⇨ 08/16
3008 II 1.6 PureTech 180	5GF(EP6FADTXD)	07/18 ⇨
3008 II 1.6 THP 150	5GX(EP6FDTMD)	11/17 ⇨
3008 II 1.6 THP 165	5GY(EP6FDTM), 5GZ(EP6FDT)	05/16 ⇨
3008 II Hybrid	5GQ(EP6FADTXHPD)	10/19 ⇨
3008 II Hybrid4	5GB(EP6FADTXHPA)	10/19 ⇨
5008 I 1.6 16V	5FS(EP6C), 5FV(EP6CDT), 5FW(EP6), EP6	09/09 ⇨ 03/17
5008 I 1.6 THP 150	5FX(EP6DT)	02/12 ⇨ 03/17
5008 I 1.6 THP 163	5GZ(EP6FDT)	02/12 ⇨ 03/17
5008 I 1.6 THP 165	5GZ(EP6FDT)	02/12 ⇨ 03/17
5008 II 1.6	5GX(EP6FDTMD)	07/18 ⇨
5008 II 1.6 PureTech 180	5GF(EP6FADTXD)	07/18 ⇨
5008 II 1.6 THP 165	5GY(EP6FDTM), 5GZ(EP6FDT)	12/16 ⇨
PARTNER II 1.6	5FK(EP6CB), 5FS(EP6C)	04/10 ⇨
PARTNER II TEPEE 1.6 VTi	5FK(EP6CB), 5FS(EP6C)	09/09 ⇨
RCZ 1.6 16V	5FM(EP6CDTM), 5FV(EP6CDT), EP6CDTX	03/10 ⇨ 12/15
RCZ 1.6 THP 150	5FE(EP6CDTMD)	03/11 ⇨ 12/15
RCZ 1.6 THP 270	5FG(EP6CDTR)	06/13 ⇨ 12/15
ROLLS-ROYCE		
CULLINAN V12	N74B68A	08/18 ⇨
DAWN V12	N74B66A	02/16 ⇨
GHOST V12	N74B66A, N74B68A	12/09 ⇨
GHOST V-Specification	N74B66A	01/14 ⇨ 06/14
PHANTOM 6.75 V12	N73B68A	06/07 ⇨ 07/17
PHANTOM V12	N73B68A	01/03 ⇨ 07/17
PHANTOM V12, V12 EWB	N74B68A	09/17 ⇨
WRAITH V12	N74B66A	08/13 ⇨
VAUXHALL		
GRANDLAND X 1.6 Turbo Hybrid	D16XHT(EP6FADTXHP)	12/19 ⇨
GRANDLAND X 1.6 Turbo Hybrid4	D16XHT(EP6FADTXHP)	06/19 ⇨

FACET 9.6376

08,7

COILS

Adatt./Suitable:

BOSCH
0 986 221 088

CITROËN
5970 87
5970 A0
96 566 957 80
96 582 279 80

HITACHI
133842
2503842

MAGNETI MARELLI
060717207012

PEUGEOT
5970 87
5970 92
5970 A0
5970 A6
96 566 957 80

SAGEM
21597716-4
21603800-7

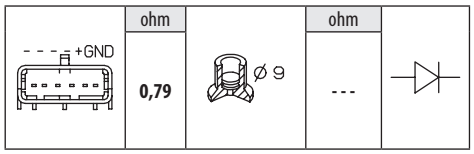

CITROËN		
C4 PICASSO I 1.8 Bifuel	6FY(EW7A)	01/09 ⇨ 10/12
C4 PICASSO I 1.8 i 16V	6FY(EW7A)	02/07 ⇨ 12/11
C4 PICASSO I 2.0 i 16V	RFJ(EW10A)	09/07 ⇨ 08/13
C4 I 2.0 16V	RFJ(EW10A)	11/04 ⇨ 07/11
C4 I 2.0 VTR	RFJ(EW10A)	10/06 ⇨ 12/07
C4 II 2.0 Flex	RFJ(EW10A)	11/09 ⇨
C5 I 1.8 16V	6FY(EW7A)	09/05 ⇨
C5 I 2.0	RFJ(EW10A)	11/04 ⇨ 01/08
C5 I 2.0 16V	RFJ(EW10A)	09/04 ⇨
C5 II 1.8 16V	6FY(EW7A)	02/08 ⇨
C5 II 2.0 16V	RFJ(EW10A)	02/08 ⇨
C5 II 2.0 16V BioFlex	RFJ(EW10A)	02/08 ⇨
C8 2.0	RFJ(EW10A)	06/04 ⇨ 12/11
C8 2.0 16V	RFJ(EW10A)	09/05 ⇨
C4 GRAND PICASSO I 1.8 i 16V	6FY(EW7A)	10/06 ⇨ 12/10
C4 GRAND PICASSO I 1.8 i 16V Flex	6FY(EW7A)	06/09 ⇨ 01/13
C4 GRAND PICASSO I 2.0 i 16V	RFJ(EW10A)	10/06 ⇨ 08/13
JUMPY II 2.0 i	RFH(EW10A), RFJ(EW10A)	01/07 ⇨ 03/16
PEUGEOT		
EXPERT II TEPEE 2.0 16V	RFH(EW10A), RFJ(EW10A)	01/07 ⇨ 03/16
308 I 2.0 Bioflex	RFJ(EW10A)	01/08 ⇨ 12/12
308 I 2.0 CVVT	RFJ(EW10A)	07/09 ⇨ 12/14
307 2.0 16V	RFJ(EW10A), RFK(EW10J4S)	10/03 ⇨ 04/09
407 2.0 16V	RFJ(EW10A)	08/05 ⇨ 12/10
407 2.0 Bioflex	RFJ(EW10A)	09/07 ⇨ 02/11
407 2.0 Flex	RFJ(EW10A)	10/05 ⇨ 02/11
607 2.2 16V	3FY(EW12J4), 3FZ(EW12J4)	02/00 ⇨ 06/10
807 2.0 16V	RFJ(EW10A)	09/05 ⇨
EXPERT II 2.0 16V	RFH(EW10A), RFJ(EW10A)	01/07 ⇨

FACET 9.6378

05,5

COILS

Adatt./Suitable:

BOSCH
0 221 604 010

FORD
1 371 601
6M5G-12029-AA

HITACHI
133889
2503889

VOLVO
30713417
8677837

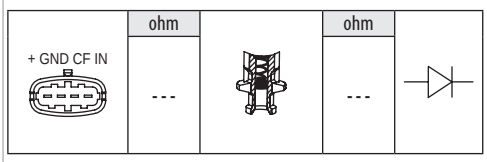

FORD		
FOCUS II 2.5 RS	JZDA	01/09 ⇨ 07/11
FOCUS II 2.5 RS 500	JZDA	05/10 ⇨ 07/11
FOCUS II 2.5 ST	HYDA	10/05 ⇨ 09/12
GALAXY II 2.5 ST	HUWA	05/06 ⇨
KUGA I 2.5	HYDB, HYDC	02/08 ⇨ 11/12
KUGA I 2.5 4x4	HYDB	02/08 ⇨ 11/12
MONDEO III 2.5	HUBA	03/07 ⇨ 01/15
S-MAX I 2.5 ST	HUWA	05/06 ⇨ 12/14
VOLVO		
C30 2.4 i	B5244S4	10/06 ⇨ 12/12
C30 T5	B5254T3, B5254T7	10/06 ⇨ 12/13
C70 II 2.4	B5244S5	03/06 ⇨ 10/09
C70 II 2.4 i	B5244S4	03/06 ⇨ 10/09
C70 II T5	B5254T3, B5254T7	03/06 ⇨ 06/13
S40 II 2.4	B5244S4, B5244S5	01/04 ⇨ 12/12
S40 II T5	B5254T3, B5254T7	01/04 ⇨ 12/12
S40 II T5 AWD	B5254T3, B5254T7	04/04 ⇨ 12/10
S60 I 2.0 T	B5204T5	07/00 ⇨ 04/10
S60 I 2.4 AWD	B5244T5	02/04 ⇨ 04/10
S60 I 2.5 AWD	B5254T4	09/03 ⇨ 04/10
S60 II 2.0 T	B5204T8	05/12 ⇨ 12/15
S60 II 2.5 T	B5254T14	01/13 ⇨
S60 II 2.5 T5	B5254T5	09/11 ⇨ 12/15
S60 II 2.5 T5 AWD	B5254T14, B5254T5	09/12 ⇨ 12/18
S60 II T	B5204T9	04/14 ⇨
S60 II T5 AWD	B5254T12	08/15 ⇨ 12/18
S80 2.5 T	B5254T6	01/08 ⇨
S80 2.5 T5	B5254T12	01/12 ⇨
S80 T4	B5204T8	01/12 ⇨
S80 I 2.0 T	B5204T5	12/99 ⇨ 07/06
S80 I 2.4 LTP	B5244T4	06/04 ⇨ 07/06
S80 II 2.5 T	B5254T10, B5254T12, B5254T14, B5254T6	03/06 ⇨ 12/16
S80 II 2.5 T AWD	B5254T6	10/06 ⇨ 04/09
S80 II 2.5 T FlexFuel	B5254T11, B5254T8	05/08 ⇨ 12/11
V40 II T4	B5204T8	07/13 ⇨ 12/15
V40 II T4 AWD	B5204T8	07/13 ⇨
V40 II T5	B5204T9, B5254T12, B5254T14	12/12 ⇨
V40 II T5 AWD	B5204T9, B5254T12, B5254T14	01/13 ⇨
V50 2.4	B5244S4, B5244S5	04/04 ⇨ 12/10
V50 2.4 AWD	B5244S4	08/06 ⇨ 12/09
V50 T5	B5254T3, B5254T7	04/04 ⇨ 12/12
V50 T5 AWD	B5254T3, B5254T7	04/04 ⇨ 12/10
V60 I 2.0 BiFuel	B5204T9	03/14 ⇨ 12/15
V60 I 2.0 T	B5204T8	01/14 ⇨ 07/18
V60 I T5	B5204T9	10/13 ⇨ 05/18
V60 I T5 AWD	B5254T12, B5254T14	03/15 ⇨ 05/18
V70 II 2.0 T	B5204T5	11/99 ⇨ 08/07
V70 II 2.4 T	B5244T4	01/05 ⇨ 12/05
V70 II 2.4 T5	B5244T5	04/04 ⇨ 08/07
V70 II 2.5 R Sport	B5254T4	12/02 ⇨ 08/07

VOLVO		
V70 II 2.5 T	B5254T2	07/01 ⇨ 08/07
V70 II 2.5 T AWD	B5254T2	07/02 ⇨ 08/07
V70 II R 2,5 T AWD	B5254T4	03/03 ⇨ 08/07
V70 III 2.0 BiFuel	B5204T9, B5204T9CNG	03/13 ⇨ 12/15
V70 III 2.0 GDI	B5204T9	04/12 ⇨ 12/15
V70 III 2.5 T	B5254T10, B5254T6	08/07 ⇨ 12/12
V70 III 2.5 T FlexiFuel	B5254T11, B5254T8	05/08 ⇨ 12/11
XC60 I T5 AWD	B5254T12	04/14 ⇨ 02/17
XC70 I 2.4 T XC AWD	B5244T4	01/05 ⇨ 12/06
XC70 II T5 AWD	B5254T12	08/15 ⇨ 12/16
XC70 II T6 AWD	B5254T14	03/15 ⇨ 12/16

FACET 9.6380

05,5

COILS

Adatt./Suitable:

BOSCH
0 221 504 702

FORD
1 224 925
1 314 271
1 322 402
1 578 771
4M5E-12A366-AA
4M5G-12A366-BA
4M5G-12A366-BB
4M5G-12A366-BC
4M5G-12A366-BD
5 047 437

HITACHI
133852
2503852

MAGNETI MARELLI
060717105012
060810269010

MAZDA
LF16-18-100
LF16-18-100A
LF16-18-100B

MERCURY
4M5Z12029B

VOLVO
30711786
31375294
869474
8694741

- +	ohm		ohm
	0,60		6500

FORD		
C-MAX I 1.8	QQDA, QQDB, QQDC	02/07 ⇨ 09/10
C-MAX I 1.8 Flexifuel	Q7DA	02/07 ⇨ 09/10
C-MAX I 2.0	AODA, AODB, AODE, SYDA	02/07 ⇨ 09/10
C-MAX I 2.0 CNG	SYDA	04/09 ⇨ 09/10
C-MAX I 2.0 LPG	SYDA	06/08 ⇨ 09/10
ECOSPORT 2.0 4x4	C20HDEA	08/12 ⇨
FOCUS II 1.8	Q7DA, QQDA, QQDB	03/06 ⇨ 09/12
FOCUS II 1.8 Flexifuel	--, 1LQ4(364CUV8), 4LQ2(122CUL4), Q7DA, QQDA, QQDB, QQDD	12/05 ⇨ 09/12
FOCUS II 2.0	AODA, AODB, AODE, SYDA	07/04 ⇨ 09/12
FOCUS II 2.0 CNG	SYDA	04/09 ⇨ 07/11
FOCUS II 2.0 Flex	SYDA	10/08 ⇨ 03/10
FOCUS II 2.0 LPG	SYDA	06/08 ⇨ 07/11
FOCUS C-MAX 1.8	CSDA, CSDB, Q7DA, QQDA, QQDB, QQDC	10/03 ⇨ 03/07
FOCUS C-MAX 1.8 Flexifuel	Q7DA	01/06 ⇨ 03/07
FOCUS C-MAX 2.0	AODA, AODB, AODE, SYDA	03/04 ⇨ 03/07
GALAXY II 2.0	AOWA, AOWB, TBWA, TBWB	05/06 ⇨ 06/15
GALAXY II 2.0 Flexifuel	TBWA, TBWB	05/06 ⇨ 06/15
MAVERICK 2.3	--	05/06 ⇨
MAVERICK 2.3 16V	GZ, ZH23HYU	03/04 ⇨
MONDEO III 2.0	AOBA, AOBC, TBBA, TBBB	03/07 ⇨ 01/15
MONDEO III 2.0 Flexifuel	TBBA, TBBB	03/09 ⇨ 01/15
MONDEO III 2.0 LPG	TBBA, TBBB	07/09 ⇨ 01/15
MONDEO IV 2.0	AOBC	03/07 ⇨ 09/14
S-MAX I 2.0	AODA, AODB, AODE, AOWA, AOWB	05/06 ⇨ 12/14

FORD		
S-MAX I 2.0 Flexifuel	TBWA, TBWB	05/06 ⇨ 12/14
TRANSIT III 2.3 16V CNG RWD	GZFC	04/06 ⇨ 08/14
TRANSIT III 2.3 16V LPG RWD	GZFC	04/06 ⇨ 08/14
TRANSIT III 2.3 16V RWD	GZFA, GZFB, GZFC	04/06 ⇨ 08/14
MAZDA		
3 2.0	LF17	09/03 ⇨ 06/06
3 I 2.0	LF17, LF50, LF72, LFN7, LFN8	10/03 ⇨ 12/09
TRIBUTE 2.3 AWD	L3-VE	04/04 ⇨ 05/08
TRIBUTE 2.3 GX	L3-VE	12/03 ⇨ 10/04
VOLVO		
C30 1.8	B4184S11	10/06 ⇨ 12/12
C30 1.8 FlexFuel	B4184S8	01/07 ⇨ 12/12
C30 2.0	B4204S3	10/06 ⇨ 12/12
C30 2.0 FlexFuel	B4204S4	01/10 ⇨ 12/12
S40 II 1.8	B4184S11	04/04 ⇨ 12/10
S40 II 1.8 FlexFuel	B4184S8	01/06 ⇨ 12/10
S40 II 2.0	B4204S3	10/06 ⇨ 12/12
S40 II 2.0 F	B4204S4	10/09 ⇨ 12/12
S80 II 2.0	B4204S3	01/08 ⇨ 09/12
S80 II 2.0 FlexFuel	B4204S4	01/08 ⇨ 12/11
V50 1.8	B4184S11	04/04 ⇨ 12/10
V50 1.8 BiFuel	B4184S8	01/09 ⇨ 09/10
V50 1.8 FlexFuel	B4184S8	01/05 ⇨ 12/10
V50 2.0	B4204S3	10/06 ⇨ 12/12
V50 2.0 FlexFuel	B4204S4	01/10 ⇨ 12/12
V70 III 2.0	B4204S3	10/07 ⇨ 12/11
V70 III 2.0 FlexiFuel	B4204S4	01/08 ⇨ 12/11

FACET 9.6381

07

COILS

Adatt./Suitable:

BOSCH
0 221 503 485
0 221 503 486
0 221 503 487

FORD
1 350 562
1 350 567
1 458 400
1 459 278
1 727 629
1 754 514
1 823 596
4M5G-12029-ZA
4M5G-12029-ZB
4S7G-12029-AA
4S7G-12029-AB
CM5G-12029-FA
CM5G-12029-FB
CM5G-12029-FC

HITACHI
138808
138809
2508808
2508809

MAGNETI MARELLI
060717036012
060717038012
060717146012
060810209010
060810270010

MAZDA
C401-18-100
C401-18-100A

VOLVO
30731419
31216444
31422170
9487221

- + -	ohm		ohm
	0,53	Ø 4	11800

FORD		
B-MAX 1.4	SPJD, SPJE	10/12 ⇨
B-MAX 1.4 LPG	RTJC	10/12 ⇨
B-MAX 1.6 Ti	IQJA, IQJC	10/12 ⇨
C-MAX I 1.6	HWDA, HWDB, HXDA, HXDB, SHDA, SHDB, SHDC, SIDA	02/07 ⇨ 09/10
C-MAX I 1.6 Ti-VCT	--	03/07 ⇨
C-MAX II 1.6	--	12/10 ⇨
C-MAX II 1.6 CNG	MUDA	01/13 ⇨ 12/14
C-MAX II 1.6 Flexifuel	MUDA, MUDD	02/11 ⇨ 06/19
C-MAX II 1.6 LPG	MUDA, MUDD	02/12 ⇨ 06/19
C-MAX II 1.6 Ti	IQDA, IQDB, MUDA, MUDD, PNDA, PNDD, XTDA, XTDB	10/10 ⇨ 06/19
FIESTA V 1.25 16V	FUJA, FUJB, M7JA, M7JB	05/02 ⇨ 06/08
FIESTA V 1.3	A9JA, A9JB, BAJA	11/01 ⇨ 08/08
FIESTA V 1.4	FXJA	05/02 ⇨ 09/05
FIESTA V 1.4 16V	FXJA, FXJB	11/01 ⇨ 06/08
FIESTA V 1.6 16V	FYJA, FYJB	11/01 ⇨ 06/08
FIESTA V ST150	N4JB	03/05 ⇨ 06/08
ECOSPORT 1.5 Ti	UEJB, UEJE	10/13 ⇨
ECOSPORT 1.5 Ti-VCT	UEJB, UEJE	10/13 ⇨
ECOSPORT 1.6 Ti-VCT	HXJD, IQJB	08/12 ⇨
FIESTA VI 1.25	SNJA, SNJB, SNJC, SNJD, STJA, STJB, STJC, STJD	06/08 ⇨
FIESTA VI 1.4	--, 24KH1CT5H1, RTJA, SPJA, SPJC, SPJE	06/08 ⇨
FIESTA VI 1.4 LPG	RTJA, RTJB, RTJD, SPJA, SPJC, SPJE	01/09 ⇨ 04/17
FIESTA VI 1.6	XTJA	03/15 ⇨
FIESTA VI 1.6 Ti	--, 68GR-FKS, HXJA, HXJB, HXJE, IQJA, IQJC, IQJE, RVJA, U5JA	06/08 ⇨
FIESTA VI 1.6 Ti-VCT	HXJA, HXJB	10/08 ⇨ 12/12
FOCUS II 1.4	ASDA, ASDB	07/04 ⇨ 09/12
FOCUS II 1.6	HWDA, HWDB, SHDA, SHDB, SHDC	07/04 ⇨ 09/12
FOCUS II 1.6 LPG	SIDA	10/09 ⇨ 09/12
FOCUS II 1.6 Ti	HXDA, HXDB, SIDA	07/04 ⇨ 09/12
FOCUS II 1.6 Ti-VCT	--, HXDA, HXDB, SIDA	09/05 ⇨
FOCUS III 1.6 Flexifuel	MUDA, MUDD	07/10 ⇨
FOCUS III 1.6 LPG	MUDA, MUDD	02/12 ⇨
FOCUS III 1.6 Ti	IQDA, IQDB, IQDC, MUDA, MUDD, PNDA, PNDD, XTDA, XTDB	07/10 ⇨
FOCUS III 1.6 Ti-VCT	--	07/10 ⇨
FOCUS C-MAX 1.6	HWDA, HWDB, SHDA, SHDB, SHDC	10/03 ⇨ 03/07
FOCUS C-MAX 1.6 Ti	HXDA, HXDB, SIDA	08/04 ⇨ 03/07
FUSION 1.25	--, FUJA, FUJB	10/02 ⇨
FUSION 1.3	--, BAJA	08/02 ⇨
FUSION 1.4	--, FXJA, FXJB, FXJC	08/02 ⇨
FUSION 1.4 LPG	UTJA	01/10 ⇨ 12/12
FUSION 1.6	FYJA, FYJB, FYJC	08/02 ⇨ 11/09
FUSION 2.0	--	11/04 ⇨
GRAND C-MAX 1.6 Ti	IQDA, IQDB, PNDA, PNDD, XTDA	12/10 ⇨ 06/19
KA+ 1.2	B2KA, YSKD, YSKE	06/16 ⇨
KA+ 1.2 Ti-VCT	YSKD, YSKE	06/16 ⇨
KA I 1.3 i	BAA, J4D, J4K, J4M, J4N, J4P, J4S	09/96 ⇨ 11/08
KA I 1.3 i ROCAM	A9A, A9B	08/02 ⇨ 11/08
KA I 1.6 i	CDB, CDC, HL16SL9B	02/01 ⇨ 11/08
MONDEO II 1.8 16V	CGBA, CGBB, CHBA, CHBB	10/00 ⇨ 03/07
MONDEO II 2.0 16V	CJBA, CJBB	10/00 ⇨ 03/07
MONDEO III 1.6 Ti	KGBA, PNBA, RHBA	03/07 ⇨ 01/15
MAZDA		
2 I 1.2	FUJA	02/03 ⇨ 06/07
2 I 1.25	FUJA	04/03 ⇨ 06/07
2 I 1.3 L	ZJ-04	04/03 ⇨ 06/07
2 I 1.4	FXJA	02/03 ⇨ 06/07
2 I 1.5	ZY-VE	04/03 ⇨ 06/07
2 I 1.6	FYJA	02/03 ⇨ 06/07
VOLVO		
C30 1.6	B4164S3	10/06 ⇨ 12/12
S40 II 1.6	B4164S3	01/05 ⇨ 12/12
V50 1.6	B4164S3	01/05 ⇨ 12/12

FACET 9.6383

08,5

COILS

Adatt./Suitable:

BOSCH
0 986 22A 205

CITROËN
5970 85
96 517 106 80

GENERAL MOTORS
1 104 091

HITACHI
133854
2503854

MAGNETI MARELLI
060717157012

PEUGEOT
5970 85

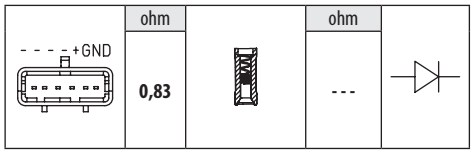

CITROËN		
C2 1.4 16V	KFU(ET3J4)	04/05 ⇨ 12/09
C4 I 1.4 16V	KFU(ET3J4)	11/04 ⇨ 07/11
C3 I 1.4 16V	KFU(ET3J4)	12/03 ⇨
PEUGEOT		
206 1.4 16V	KFU(ET3J4)	10/03 ⇨
207 1.4 16V	KFU(ET3J4)	02/06 ⇨ 10/13
307 1.4 16V	KFU(ET3J4)	11/03 ⇨ 07/07
1007 1.4 16V	KFU(ET3J4)	10/05 ⇨

FACET 9.6387

07,5

COILS

Adatt./Suitable:

BOSCH
0 986 221 058

HITACHI
134041
2504041

MAGNETI MARELLI
060717144012

MERCEDES-BENZ
A 000 150 19 80
A 000 150 26 80
A 000 150 27 80
A 272 906 00 60

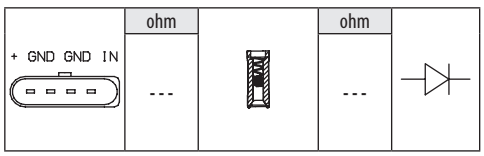

MERCEDES-BENZ		
CLASSE C II C 230	M272.920	01/05 ⇨ 05/08
CLASSE C II C 280	M272.940	01/05 ⇨ 08/07
CLASSE C II C 280 4-matic	M272.941	01/05 ⇨ 08/07
CLASSE C II C 350	M272.960	01/05 ⇨ 05/08
CLASSE C II C 350 4-matic	M272.970	01/05 ⇨ 08/07
CLASSE C III C 230	M272.921	01/07 ⇨ 08/14
CLASSE C III C 230 4-matic	M272.911	07/07 ⇨ 01/14

MERCEDES-BENZ		
CLASSE C III C 250	M272.921	01/07 ⇨
CLASSE C III C 250 4-matic	M272.911	07/07 ⇨
CLASSE C III C 280	M272.947	01/07 ⇨ 08/14
CLASSE C III C 280 4-matic	M272.948	07/07 ⇨ 01/14
CLASSE C III C 300	M272.947	08/07 ⇨ 08/14
CLASSE C III C 300 4-matic	M272.948	07/07 ⇨ 01/14
CLASSE C III C 350	M272.961	01/07 ⇨ 08/14
CLASSE C III C 350 4-matic	M272.971	07/07 ⇨ 01/14
CLASSE CLC CLC 230	M272.920	05/08 ⇨ 06/11
CLASSE CLC CLC 250	M272.920	06/09 ⇨ 06/11
CLASSE CLC CLC 350	M272.960	05/08 ⇨ 06/11
CLASSE CLK II 280	M272.940	01/05 ⇨ 05/09
CLASSE CLK II 350	M272.960	01/05 ⇨ 05/09
CLASSE CLK II 500	M273.967	06/06 ⇨
CLASSE CLK II 550	M273.967	06/06 ⇨
CLASSE CLK II CLK 280	M272.940	01/05 ⇨ 03/10
CLASSE CLK II CLK 350	M272.960	01/05 ⇨ 03/10
CLASSE CLK II CLK 500	M273.967	06/06 ⇨ 03/10
CLASSE CLS I CLS 280	M272.943	07/08 ⇨ 12/10
CLASSE CLS I CLS 300	M272.943	04/09 ⇨ 12/10
CLASSE CLS I CLS 350	M272.964	10/04 ⇨ 12/10
CLASSE CLS I CLS 500	M273.960	04/06 ⇨ 12/10
CLASSE CLS I CLS 550	M273.960	04/06 ⇨ 02/11
CLASSE E III 350 CGI	M272.985	05/06 ⇨ 07/09
CLASSE E III E 230	M272.922	09/07 ⇨ 12/08
CLASSE E III E 230 T	M272.922	05/07 ⇨ 07/09
CLASSE E III E 250	M272.922	09/07 ⇨ 12/08
CLASSE E III E 280	M272.943	03/05 ⇨ 12/08
CLASSE E III E 280 4-matic	9930.61, M272944	03/05 ⇨ 12/08
CLASSE E III E 280 T	M272.943	03/05 ⇨ 07/09
CLASSE E III E 280 T 4-matic	9930.61, M272944	03/05 ⇨ 07/09
CLASSE E III E 300	M272.943	03/05 ⇨ 12/08
CLASSE E III E 300 T 4-matic	9930.61	03/05 ⇨ 07/09
CLASSE E III E 350	M272.964	03/05 ⇨ 12/08
CLASSE E III E 350 4-matic	M272.972	08/04 ⇨ 12/08
CLASSE E III E 350 CGI	M272.985	09/07 ⇨ 12/08
CLASSE E III E 350 T	M272.964	03/05 ⇨ 07/09
CLASSE E III E 350 T 4-matic	M272.972	03/05 ⇨ 07/09
CLASSE E III E 500	M273.960	04/06 ⇨ 12/08
CLASSE E III E 500 4-matic	M273.962	04/06 ⇨ 12/08
CLASSE E III E 500 T	M273.960	04/06 ⇨ 07/09
CLASSE E III E 500 T 4-matic	M273.962	04/06 ⇨ 07/09
CLASSE E III E 550 4-matic	M273.962	04/06 ⇨ 12/08
CLASSE E III E 550 T 4-matic	M273.962	04/06 ⇨ 07/09
CLASSE E IV E 250	M272.923	01/10 ⇨
CLASSE E IV E 300	M272.952, M272.980	01/09 ⇨
CLASSE E IV E 350	M272.961, M272.980, M272.988	01/09 ⇨
CLASSE E IV E 350 4-matic	M272.977	01/09 ⇨ 12/11
CLASSE E IV E 500	M273.966	01/09 ⇨ 12/16
CLASSE E IV E 500 4-matic	M273.970	01/09 ⇨ 12/11
CLASSE E IV E 550 [USA]	M273.966	01/09 ⇨
CLASSE E IV E 550 [USA] [CAN] [JPN]	M273.971	01/09 ⇨
CLASSE E IV E 550 4-matic [USA] [CAN]	M273.970	01/09 ⇨
CLASSE G II G 500	M273.963, M273.969	01/07 ⇨
CLASSE G II G 500 GUARD	M273.963	06/10 ⇨
CLASSE G II G 550	M273.963, M273.969	06/10 ⇨
CLASSE GL I GL 450 4-matic	M273.923	09/06 ⇨ 08/12
CLASSE GL I GL 500 4-matic	M273.963	09/06 ⇨ 12/12
CLASSE GL I GL 550 4-matic	M273.963	09/06 ⇨
CLASSE GLK 280 4-matic	M272.948	06/08 ⇨ 06/09
CLASSE GLK 300 4-matic	M272.948	07/09 ⇨ 12/15
CLASSE GLK 350	M272.991	04/09 ⇨ 06/15
CLASSE GLK 350 4-matic	M272.971	06/08 ⇨ 04/11
CLASSE M II ML 300	M272.945	07/09 ⇨
CLASSE M II ML 300 4-matic	M272.945	03/10 ⇨ 12/11
CLASSE M II ML 350	M272.967	07/05 ⇨
CLASSE M II ML 350 4-matic	M272.967	02/05 ⇨ 12/11
CLASSE M II ML 450 4-matic Hybrid	M272.973	07/05 ⇨
CLASSE M II ML 500 4-matic	M273.963	12/07 ⇨ 12/11
CLASSE M II ML 550 4-matic	M273.963	12/07 ⇨
CLASSE R R 280	M272.945	01/07 ⇨ 12/14
CLASSE R R 280 4-matic	M272.945	05/07 ⇨ 12/11
CLASSE R R 300	M272.945	07/09 ⇨ 12/14
CLASSE R R 300 4-matic	M272.945	07/09 ⇨
CLASSE R R 350	M272.967	01/07 ⇨ 12/12
CLASSE R R 350 4-matic	M272.967	08/05 ⇨ 12/12
CLASSE R R 500 4-matic	M273.963	05/07 ⇨ 12/14
CLASSE R R 550 4-matic	M273.963	01/07 ⇨
CLASSE S V CL 550 [JPN]	M273.961	06/06 ⇨
CLASSE S V CL 550 [USA]	M273.961	06/06 ⇨
CLASSE S V CL 550 4-matic [JPN]	M273.968	02/08 ⇨
CLASSE S V CL 550 4-matic [USA]	M273.968	02/08 ⇨
CLASSE S V S 280	M272.946	08/06 ⇨ 12/13

MERCEDES-BENZ		
CLASSE S V S 300	M272.946	08/06 ⇨ 12/13
CLASSE S V S 350	M272.965	10/05 ⇨ 12/13
CLASSE S V S 350 4-matic	M272.975	02/08 ⇨ 12/13
CLASSE S V S 400 Hybrid	M272.974	01/09 ⇨ 12/13
CLASSE S V S 450	M273.922	12/05 ⇨ 12/13
CLASSE S V S 450 4-matic	M273.924	12/05 ⇨ 12/13
CLASSE S V S 500	M273.961	10/05 ⇨ 12/13
CLASSE S V S 500 4-matic	M273.968	10/05 ⇨ 12/13
CLASSE S V S 550 [JPN]	M273.961	10/05 ⇨
CLASSE S V S 550 [USA]	M273.961	10/05 ⇨
CLASSE S V S 550 4-matic [JPN]	M273.968	10/05 ⇨
CLASSE S V S 550 4-matic [USA]	M273.968	10/05 ⇨
SPRINTER II 224	M272.979	06/06 ⇨
SPRINTER II 324	M272.979	06/06 ⇨ 12/13
SPRINTER II 424	M272.979	06/06 ⇨ 12/13
SPRINTER II 524	M272.979	06/06 ⇨ 12/13
CLASSE SL V 280	M272.949	03/08 ⇨ 01/12
CLASSE SL V 300	M272.949	04/09 ⇨ 01/12
CLASSE SL V 350	M272.966, M272.968	03/06 ⇨ 01/12
CLASSE SL V 500	M273.965	03/06 ⇨ 01/12
CLASSE SL V 550	M273.965	03/06 ⇨ 01/12
CLASSE SLK II 280	M272.942	01/05 ⇨ 02/11
CLASSE SLK II 300	M272.942	04/09 ⇨ 02/11
CLASSE SLK II 350	M272.963, M272.969	06/04 ⇨ 02/11
VIANO 3.5	M272.978	09/07 ⇨
VIANO 3.7	M112.976	06/04 ⇨ 07/07
VITO II 123	M112.976	06/04 ⇨ 07/08
VITO II 126	M272.978	09/07 ⇨

FACET 9.6389

05,5

COILS

Adatt./Suitable:

BOSCH
0 221 604 014

HITACHI
133863
2503863

MAGNETI MARELLI
060810187010

NISSAN
22448-ED800
22448-ED80A

RENAULT
77 01 065 086

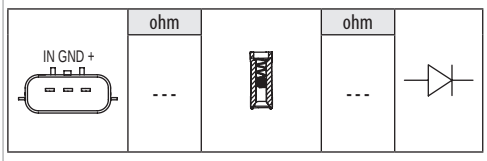

NISSAN		
MICRA III 160 SR	HR16DE	05/05 ⇨ 06/10
MICRA C+C 1.6 160 SR	HR16DE	08/05 ⇨
NOTE I 1.6	HR16DE	03/06 ⇨ 06/12
QASHQAI / QASHQAI +2 1.6 CVTC	HR16DE	03/13 ⇨ 04/14
QASHQAI I 1.6	HR16DE	02/07 ⇨ 12/13
QASHQAI I 1.6 LPG	HR16DE	11/10 ⇨ 12/13
QASHQAI I 2.0	MR20DE	02/07 ⇨ 12/13
QASHQAI I 2.0 Trazione integrale	MR20DE	02/07 ⇨ 12/13
TIIDA I 1.6	HR16DE	09/07 ⇨ 12/12
TIIDA I 1.8	MR18DE	05/04 ⇨ 12/12
X-TRAIL II 2.0	MR20DE	06/08 ⇨ 02/14
X-TRAIL II 2.0 4x4	MR20DE	06/07 ⇨ 11/13
X-TRAIL II 2.0 FWD	MR20DE	03/07 ⇨ 11/13
RENAULT		
CLIO III 2.0 16V	M4R700, M4R701	09/06 ⇨ 12/14
LAGUNA III 2.0 16V	M4R704	10/07 ⇨ 12/15
LAGUNA III 2.0 16V Hi-Flex	M4R704	10/07 ⇨ 12/15

FACET 9.6392 — 05,5

COILS

Adatt./Suitable:

HITACHI
134006
2504006

HYUNDAI
27301-3C000

KIA
27301-3C000

MAGNETI MARELLI
060717148012

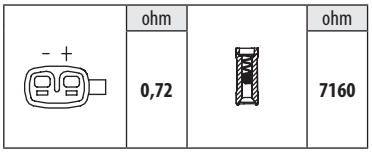

HYUNDAI		
EQUUS / CENTENNIAL II 3.8	--	01/13 ⇨
GENESIS 3.0 GDI	G6DG	06/14 ⇨
GENESIS 3.0 GDI 4WD	G6DG	06/14 ⇨
GENESIS 3.8	G6DA	09/09 ⇨
GENESIS 3.8 GDI	G6DJ	06/14 ⇨
GENESIS 3.8 GDI 4WD	G6DJ	06/14 ⇨
GENESIS 3.8 V6	G6DA, G6DJ	01/08 ⇨
GRANDEUR 3.3	G6DB	04/05 ⇨ 12/11
GRAND SANTA FE 3.0 GDi Trazione integrale	G6DG	07/13 ⇨
GRAND SANTA FE 3.3	G6DF	01/14 ⇨
GRAND SANTA FE 3.3 Trazione integrale	G6DF	02/14 ⇨
IX55 3.8 V6	G6DA	01/11 ⇨
IX55 3.8 V6 4WD	G6DA	01/07 ⇨
NF 2.0 CVVT	G4BPE	05/05 ⇨ 12/10
SANTA FE II 3.3	G6DB	07/07 ⇨ 11/08
SANTA FE II 3.3 Dynamic 4x4	G6DB	03/06 ⇨ 12/12
SANTA FE II 3.5	--	01/10 ⇨
SANTA FE II 3.5 4x4	G6DC	08/11 ⇨ 12/12
SANTA FE IV 3.5 MPI AWD	G6DC	07/19 ⇨
SONATA V 2.0 VVTi GLS	G4KA	05/05 ⇨ 12/10
SONATA V 2.4	G4KC	01/05 ⇨ 12/10
SONATA V 3.3	G6DB	01/05 ⇨ 12/10
SONICA 3.3 CVVT	G6DB	03/09 ⇨ 12/10
KIA		
BORREGO 3.8	--	06/08 ⇨ 12/13
CADENZA 3.5 CVVT	G6DC	01/10 ⇨
CARENS II 2.0 CVVT	G4KA	09/06 ⇨
MOHAVE 3.8	--	12/08 ⇨
OPIRUS 3.8 V6	G6DA	10/06 ⇨
OPTIMA II 2.0	G4KA	05/08 ⇨
QUORIS 3.8	G6DK	01/13 ⇨
QUORIS 3.8 GDI	G6DJ	04/15 ⇨
MAGENTIS II 2.0	G4JP, G4KA	11/05 ⇨
SORENTO I 3.3 V6	--	12/06 ⇨
SORENTO I 3.3 V6 4WD	G6DB	02/07 ⇨ 12/11
SORENTO III 3.5 D-CVVT	G6DC	12/18 ⇨
SORENTO III 3.5 D-CVVT 4WD	G6DC	12/18 ⇨
SORENTO II 3.3 GDI	--	10/12 ⇨
SORENTO II 3.5	G6DC	11/09 ⇨
SORENTO II 3.5 4WD	G6DC	11/09 ⇨

FACET 9.6395 — 05,5

COILS

Adatt./Suitable:

BOSCH
0 986 221 062

HITACHI
134045
2504045

HYUNDAI
27301-2B000

KIA
27301-2B000

MAGNETI MARELLI
060717111012

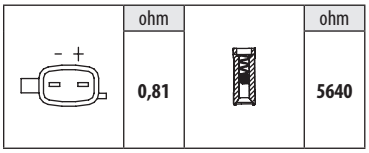

HYUNDAI		
ELANTRA IV 1.6 CVVT	G4FC	06/06 ⇨ 06/11
I30 I 1.4	G4FA	10/07 ⇨ 06/12
I30 I 1.4 LPG	G4FA	01/09 ⇨ 06/12
I30 I 1.6	G4FC	10/07 ⇨ 06/12
KIA		
CEED I 1.4	G4FA	12/06 ⇨ 12/12
CEED I 1.6	G4FC	09/07 ⇨ 12/12
CEED I 1.6 LPG	G4FC	06/07 ⇨ 12/11
CERATO I 1.6	G4ED, G4FC, G4GR	04/04 ⇨
PRO CEE'D I 1.4	G4FA	02/08 ⇨ 09/12
PRO CEE'D I 1.6	G4FC	02/08 ⇨ 09/12
PRO CEE'D I 1.6 CVVT	G4FC	02/08 ⇨ 09/12

FACET 9.6396 — 05

COILS

Adatt./Suitable:

BOSCH
0 986 221 005

HITACHI
138746

HYUNDAI
27301-02600 *5
27301-02630 *5
27301-02800 *5
27310-02620
27310-02630

[*5] Supplied single coil only, without fastening clamp
- Fornita bobina singola senza staffa
- Fourni seulement la bobine individuelle, sans étrier
- Nur Zündspule geliefert, ohne Befestigungsbügel
- Suministrada solamente la bobina individual, sin brida

9.6396

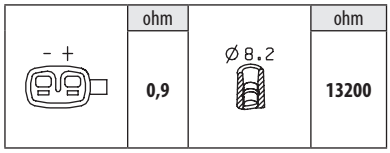

HYUNDAI		
ATOS 1.0 i	G4HC	03/01 ⇨ 07/03
ATOS 1.1	G4HD, G4HG	06/03 ⇨ 12/10
ATOS PRIME 1.0 i	G4HC-E	03/01 ⇨ 07/03
ATOS PRIME 1.1	G4HD, G4HG	08/03 ⇨ 12/08
I10 I 1.1	G4HG	12/07 ⇨ 12/13
I10 I 1.1 LPG	G4HG	01/09 ⇨ 12/13
SANTRO 1.1	G4HD	01/03 ⇨

FACET 9.6397 — 05,5

COILS

Adatt./Suitable:

CITROËN
5970 96

HITACHI
134083
2504083

MITSUBISHI
1832A016

PEUGEOT
5970 96

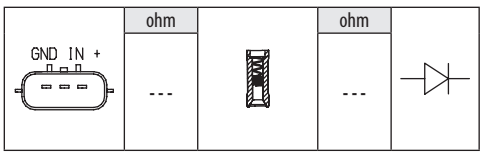

CITROËN		
C4 AIRCROSS 2.0	4B11	04/12 ⇨
C4 AIRCROSS 2.0 AWC	4B11	04/12 ⇨
C-CROSSER 2.0	4B11	11/10 ⇨
C-CROSSER 2.0 Trazione integrale	4B11	11/10 ⇨

CITROËN		
C-CROSSER 2.4 16V	SFZ(4B12MMC)	08/08 ⇨
C-CROSSER ENTERPRISE 2.4 16V	4B12	01/09 ⇨
MITSUBISHI		
ASX 1.8	4B10	02/10 ⇨
ASX 1.8 4WD	6B4204T30	02/10 ⇨
ASX 2.0 i	4B11	06/10 ⇨
ASX 2.0 i 4WD	4B11	01/10 ⇨
ASX 2.0 MIVEC	4B11, 4J11	06/10 ⇨
ASX 2.0 MIVEC 4WD	4B11, 4J11	06/10 ⇨
DELICA D5 2.4 4WD	4B12	06/07 ⇨
LANCER 1.8 i	--	10/07 ⇨
LANCER IX 1.8	4B10, 4J10	02/08 ⇨
LANCER IX 1.8 Bifuel	4B10	01/10 ⇨
LANCER IX 1.8 Flex	4B10	03/09 ⇨
LANCER IX 1.8 Flexfuel	4B10, 6B4204T30	03/09 ⇨
LANCER IX 1.8 MIVEC	4B10, 4J10	03/09 ⇨
LANCER IX 2.0	4B11	04/08 ⇨
LANCER IX 2.0 i	4B11	04/07 ⇨
LANCER IX 2.0 i 4WD	4B11	03/07 ⇨
OUTLANDER I 2.4 4WD	4G64(16V)	05/03 ⇨ 10/06
OUTLANDER I 2.4 HDD Mivec	4G69	03/01 ⇨ 12/06
OUTLANDER II 2.0	4B11	11/06 ⇨ 11/12
OUTLANDER II 2.0 4WD	4B11	11/06 ⇨ 11/12
OUTLANDER II 2.4	4B12	11/06 ⇨ 11/12
OUTLANDER II 2.4 4WD	4B12	09/07 ⇨ 11/12
OUTLANDER II 2.4 Flex 4WD	4B12	09/07 ⇨ 11/12
OUTLANDER II 3.0 4WD	6B31	11/06 ⇨ 12/12
OUTLANDER II 3.0 AWD	6B31	11/06 ⇨ 12/10
OUTLANDER II 3.0 FWD	6B31	11/06 ⇨ 11/12
OUTLANDER III 3.0	6B31	08/12 ⇨
OUTLANDER III 3.0 4WD	6B31	03/14 ⇨
OUTLANDER III 3.0 GT 4WD	6B31	08/12 ⇨
PAJERO SPORT II 3.0	6B31	09/08 ⇨
PAJERO SPORT II 3.0 4WD	6B31	09/08 ⇨
LANCER VIII 1.8 SEi Limited	4G93(GDI)	09/03 ⇨ 03/07
PEUGEOT		
4007 2.0	4B11	11/10 ⇨ 03/13
4007 2.0 4x4	4B11	11/10 ⇨ 03/13
4007 2.4 16V	SFY(4B12-MMC), SFZ(4B12-MMC)	02/07 ⇨ 03/13
4008 2.0	4B11	05/13 ⇨
4008 2.0 AWC	4B11	05/12 ⇨

FACET 9.6403 — 05,5

COILS

Adatt./Suitable:

HITACHI
134086
2504086

MITSUBISHI
1832A028

SMART
A 132 158 00 03

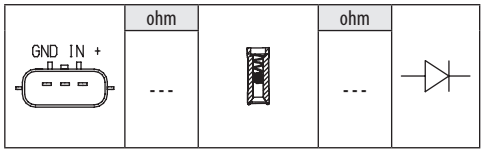

MITSUBISHI		
I 0.7	3B20	02/07 ⇨
SMART		
FORTWO II 1.0	M132.910	01/07 ⇨
FORTWO II 1.0 Brabus	M132.930	01/08 ⇨
FORTWO II 1.0 Turbo	M132.930	01/07 ⇨
FORTWO II 1.0 Turbo Brabus	M132.930	07/10 ⇨

FACET 9.6405 — 05,5

COILS

Adatt./Suitable:

CITROËN
16 075 767 80

HITACHI
134087
2504087

MITSUBISHI
MN195805

PEUGEOT
16 075 767 80

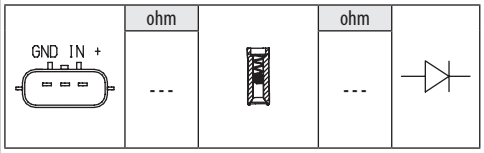

CITROËN		
C4 AIRCROSS 1.6	4A92, NKZ(4A92)	04/12 ⇨
MITSUBISHI		
ASX 1.6 LPG	4A92	06/10 ⇨
ASX 1.6 MIVEC	4A92	05/10 ⇨
COLT VI 1.1	3A91	10/04 ⇨ 06/12
COLT VI 1.1 LPG	3A91	10/04 ⇨ 06/12
COLT VI 1.3	4A90	06/04 ⇨
COLT VI 1.3 4WD	4A90	08/04 ⇨
COLT VI 1.3 LPG	4A90	06/04 ⇨ 06/12
LANCER IX 1.5	4A91	06/08 ⇨
LANCER IX 1.5 Bifuel	4A91	02/10 ⇨
LANCER IX 1.6 MIVEC	4A92	05/10 ⇨
PEUGEOT		
4008 1.6	--, 4A92, MMC	05/12 ⇨

FACET 9.6407 — 08,6

COILS

Adatt./Suitable:

BOSCH
0 221 503 468

GENERAL MOTORS
9 198 834
90 424 480

HITACHI
133879
2503879

MAGNETI MARELLI
060717185012

OPEL
62 35 037
91 98 834

VAUXHALL
9198834

[03] **Supplied until depletion**
- Fornibile fino ad esaurimento delle scorte
- Fourni jusqu'à épuisement du stock
- Lieferbar solange vorrat reicht
- Suministrado hasta el stock termina

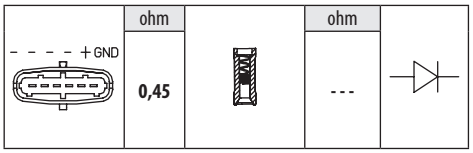

OPEL		
ASTRA G 2.0 16V Turbo	Z20LET	09/00 ⇨ 10/05
ASTRA G 2.0 OPC	Z20LET	03/02 ⇨ 10/05
ASTRA H 2.0 Turbo	Z20LEH, Z20LEL, Z20LER	03/04 ⇨ 10/10
ZAFIRA B 2.0	Z20LEH, Z20LER	07/05 ⇨ 12/10
ZAFIRA B 2.0 VAN	Z20LER	07/05 ⇨ 12/10
SPEEDSTER 2.0	Z20LET	10/03 ⇨ 08/06
SPEEDSTER 2.0 Turbo	Z20LET	08/02 ⇨ 08/06
ZAFIRA A 2.0 OPC	Z20LET	09/01 ⇨ 06/05
VAUXHALL		
ASTRA IV 2.0	Z20LET	08/02 ⇨ 10/05
ASTRA IV 2.0 16V Turbo	Z20LET	09/00 ⇨ 08/05
ASTRA IV 2.0 SRI Turbo	Z20LET	11/01 ⇨ 05/05
ASTRA IV 2.0 Turbo	Z20LET	03/02 ⇨ 10/05
ZAFIRA A 2.0	Z20LET	06/02 ⇨ 06/05
ZAFIRA A 2.0 GSI Turbo	Z20LET	09/01 ⇨ 06/05
ASTRA V 2.0	Z20LEL	02/06 ⇨ 11/10
ASTRA V 2.0 Turbo	Z20LEH, Z20LEL, Z20LER	01/04 ⇨ 11/10
ASTRA V 2.0 VXR	Z20LEH	02/09 ⇨ 11/10
SPEEDSTER 2.0 Turbo	Z20LET	03/01 ⇨ 09/06
SPEEDSTER VXR20	Z20LET	03/01 ⇨ 09/06
VX220 2.0 i Turbo	Z20LET	03/01 ⇨ 07/05
VX220 2.0 VXR	Z20LET	10/03 ⇨ 07/05
ZAFIRA B 2.0	Z20LEH, Z20LER	07/05 ⇨ 11/14

FACET 9.6408 — 08,8

COILS

Adatt./Suitable:

GENERAL MOTORS
9 119 567
90 536 194
HITACHI
133810
2503810
MAGNETI MARELLI
060717064012
OPEL
12 08 008
91 19 567
SAAB
91 19 567
SAGEM
2 526 116 A
SIEMENS
5WK9 3171
VAUXHALL
9119567

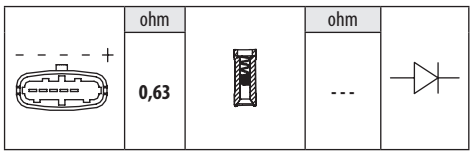

OPEL		
ASTRA F 1.8 i	X18XE1	03/98 ⇨ 08/00
ASTRA G 1.8	Z18XEL	02/03 ⇨ 07/04
ASTRA G 1.8 16V	X18XE1, Z18XE	03/00 ⇨ 10/05
ASTRA H 1.8	Z18XE	01/04 ⇨ 10/10
CORSA C 1.8	Z18XE	09/00 ⇨ 12/09
MERIVA A 1.8	Z18XE	05/03 ⇨ 05/10
SIGNUM 1.8	Z18XE	05/03 ⇨ 07/05
TIGRA B 1.8	Z18XE	06/04 ⇨ 12/10
VECTRA B 1.8 i 16V	X18XE1, Z18XE, Z18XEL	09/00 ⇨ 07/03
VECTRA C 1.8	Z18XE	04/02 ⇨ 07/08
VECTRA C 1.8 16V	Z18XE, Z18XEL	04/02 ⇨ 09/08
ZAFIRA A 1.8	Z18XEL	02/03 ⇨ 06/05
ZAFIRA A 1.8 16V	X18XE1, Z18XE	09/00 ⇨ 06/05
SAAB		
9-3 1.8 i	Z18XE	01/04 ⇨ 02/15
VAUXHALL		
ASTRA IV 1.8 16V	X18XE1, Z18XE	02/98 ⇨ 10/05
ASTRA IV 1.8 16V Dualfuel	Z18XE	07/02 ⇨ 08/05
ZAFIRA A 1.8 16V	X18XE1, Z18XE	09/00 ⇨ 08/05
ZAFIRA A 1.8 Dualfuel	Z18XE	09/00 ⇨ 08/05
ASTRA V 1.8	Z18XE	01/04 ⇨ 11/10
CORSA C 1.8 16V	Z18XE	08/00 ⇨ 09/06
MERIVA I 1.8 i 16V	Z18XE	05/03 ⇨ 06/10
SIGNUM 1.8	Z18XE	06/03 ⇨ 07/05
TIGRA B 1.8	Z18XE	06/04 ⇨ 08/09
VECTRA B 1.8 Dualfuel	Z18XE	09/00 ⇨ 07/03
VECTRA B 1.8 i 16V	X18XE1, Z18XE, Z18XEL	09/00 ⇨ 07/03
VECTRA C 1.8	Z18XEL	04/02 ⇨ 07/08
VECTRA C 1.8 16V	Z18XE	04/02 ⇨ 07/08
VECTRA C 1.8 16V Dualfuel	Z18XE	04/02 ⇨ 07/08

FACET 9.6409 — 08,7

COILS

Adatt./Suitable:

CITROËN
5970 84
5970 A5
96 351 725 80
96 453 331 80
HITACHI
133843
2503843
PEUGEOT
5970 76
5970 84
5970 A5
SAGEM
2 526 131 A

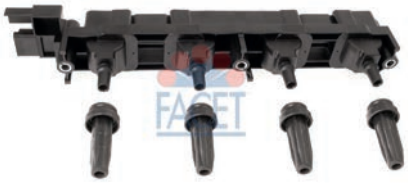

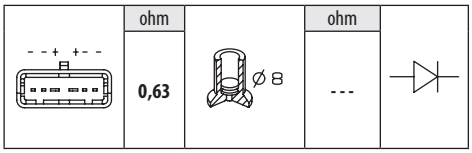

CITROËN		
C4 I 2.0 16V	RFK(EW10J4S)	11/04 ⇨ 12/10
C8 2.2	3FZ(EW12J4)	07/02 ⇨
PEUGEOT		
206 2.0 RC	RFK(EW10J4S)	07/03 ⇨ 12/07
307 2.0 16V	RFK(EW10J4S)	10/03 ⇨ 04/09
406 2.2	3FZ(EW12J4)	07/00 ⇨ 12/04
407 2.2	3FZ(EW12J4)	03/04 ⇨ 10/06
407 2.2 16V	3FY(EW12J4)	08/05 ⇨
607 2.2 16V	3FY(EW12J4), 3FZ(EW12J4)	02/00 ⇨ 06/10
807 2.2	3FZ(EW12J4)	06/02 ⇨

FACET 9.6414 — 05,5

COILS

Adatt./Suitable:

BOSCH
0 986 221 091
HITACHI
133939
2503939
MAZDA
ZJ01-18-100
ZJ01-18-100A

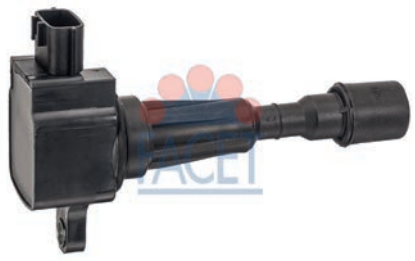

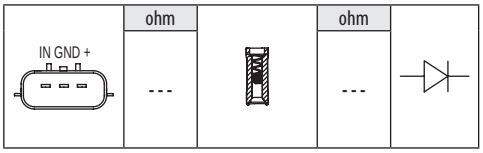

MAZDA		
2 II 1.3	ZJ-46	10/07 ⇨ 06/15
2 II 1.3 BiFuel	ZJ-46	05/11 ⇨ 11/14
2 II 1.5	ZY66	07/07 ⇨ 06/15
3 I 1.3	ZJ07, ZJ30, ZJ-VE	10/03 ⇨ 06/09
3 I 1.4	FXJA	02/04 ⇨ 06/09
3 I 1.6	B6ZE, Z6, Z601, Z627	10/03 ⇨ 06/09

MAZDA		
3 II 1.6 MZR	Z668, Z682, Z683	12/08 ⇨ 09/14

FACET 9.6416 — 05,5

COILS

Adatt./Suitable:

BOSCH
0 986 221 092
HITACHI
133936
2503936
MAGNETI MARELLI
060717176012
MAZDA
ZJ20-18-100
ZJ20-18-100A

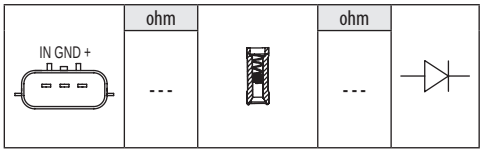

MAZDA		
2 II 1.3	ZJ-46, ZJ-VE	07/07 ⇨ 06/15
2 II 1.3 BiFuel	ZJ-46	05/11 ⇨ 11/14
2 II 1.3 MZR	ZJ-46, ZJ-VE	01/10 ⇨ 06/15
2 II 1.5	ZY06, ZY66, ZY-DE, ZY-VE	07/07 ⇨ 06/15
2 II 1.5 i	ZY-DE	05/10 ⇨ 06/15
2 II 1.5 MZR	ZY05, ZY66	06/11 ⇨ 06/15
3 I 1.3	ZJ-VE	10/03 ⇨ 06/09
3 I 1.4	FXJA	02/04 ⇨ 06/09
3 I 1.6	B6ZE, Z6, Z601, Z627	10/03 ⇨ 06/09
3 II 1.6 MZR	Z6	12/08 ⇨ 09/14
3 III 1.6	Z6Y1, Z6Y3	09/13 ⇨

FACET 9.6418 — 07

COILS

Adatt./Suitable:

BOSCH
0 986 221 046
DACIA
82 00 702 693
HITACHI
138713
1548719
2508713
MAGNETI MARELLI
060717101012
060717190012
NISSAN
22462-00Q0A
RENAULT
82 00 702 693

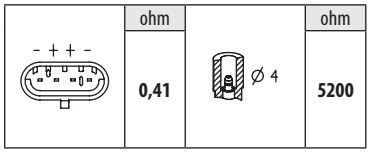

DACIA		
LOGAN I 1.0	D4D760	12/05 ⇨
LOGAN I 1.0 Hi-Flex	D4D760	01/11 ⇨ 10/12
LOGAN I 1.2 16V	D4F732	02/06 ⇨
LOGAN I 1.2 16V LPG	D4F734	02/06 ⇨
LOGAN II 1.0	D4D754	10/12 ⇨
LOGAN II 1.2	D4F732, D4F734	10/12 ⇨
LOGAN II 1.2 LPG	D4F732, D4F734	10/12 ⇨
LOGAN II MCV 1.2	D4F732	02/13 ⇨
LOGAN II MCV 1.2 LPG	D4F732, D4F734	02/13 ⇨
SANDERO I 1.0 Hi-Flex	D4D760	01/11 ⇨ 12/12
SANDERO I 1.2 16V	D4F732	11/08 ⇨
SANDERO I 1.2 16V LPG	D4F732, D4F734	11/08 ⇨
SANDERO II 1.0	D4D754	10/12 ⇨
SANDERO II 1.2	D4F732, D4F734	10/12 ⇨
SANDERO II 1.2 LPG	D4F732, D4F734	10/12 ⇨
NISSAN		
KUBISTAR 1.2 16V	D4F730	04/06 ⇨
RENAULT		
CLIO 1.2	D4F728	08/98 ⇨
CLIO II 1.2 16V	D4F722, D4F728	06/01 ⇨ 08/16
CLIO III 1.2	D4F740	10/05 ⇨ 12/14
CLIO III 1.2 16V	D4F740, D4F744, D4F764	06/05 ⇨
CLIO III 1.2 16V Hi-Flex	D4F740, D4F742, D4F744	11/07 ⇨ 12/14
CLIO III 1.2 Ethanol	D4F742	07/08 ⇨ 12/12
CLIO III 1.2 Hi-Flex	D4F742	11/07 ⇨ 12/09
CLIO IV 1.2 16V	D4F740, D4F744	11/12 ⇨
CLIO IV 1.2 16V LPG	D4F744	01/14 ⇨
CLIO IV 1.2 LPG	D4F744	01/14 ⇨
CLIO IV 1.2 LPG 16V	D4F744	11/12 ⇨ 06/15
KANGOO I 1.2 16V	D4F730	06/01 ⇨
LOGAN 1.0	D4D760	12/05 ⇨
LOGAN 1.2 16V	D4F732, D4F734	02/06 ⇨
LOGAN 1.2 16V LPG	D4F732, D4F734	12/13 ⇨
LOGAN/STEPWAY 1.2	D4F732, D4F734	11/13 ⇨
LOGAN/STEPWAY 1.2 16V LPG	D4F732, D4F734	11/13 ⇨
MODUS / GRAND MODUS 1.2	D4F740, D4F742, D4F744, D4F764	12/04 ⇨
MODUS / GRAND MODUS 1.2 16V Hi-Flex	D4F742	10/08 ⇨
MODUS / GRAND MODUS 1.2 GPL	D4F744	05/08 ⇨ 12/12
SANDERO I 1.2 16V	D4F732	11/08 ⇨
SANDERO II 1.2 16V	D4F732, D4F734	12/13 ⇨
SANDERO II 1.2 16V LPG	D4F734	12/13 ⇨
THALIA I 1.2i 16V	D4F728	04/04 ⇨
THALIA II 1.2 16V	D4F728, D4F736	09/08 ⇨ 06/14
TWINGO I 1.2 16V	D4F708	08/04 ⇨ 06/07
TWINGO II 1.2	D4F770	09/10 ⇨ 09/14
TWINGO II 1.2 16V	D4F764, D4F770, D4F772	03/07 ⇨

FACET 9.6422 — 05,5

COILS

Adatt./Suitable:

DENSO
099 700-101
DIC-0143
HITACHI
134044
2504044
HONDA
30520-RNA-A01
MAGNETI MARELLI
060717150012

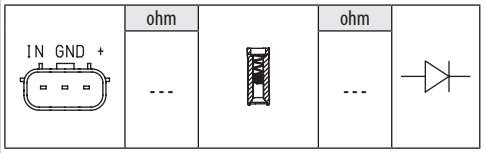

HONDA		
ACCORD VIII 2.0 i	R20A3	06/08 ⇨ 06/15
CIVIC VIII 1.6	R16A1, R16A2	09/05 ⇨
CIVIC VIII 1.8	R18A1, R18A2	09/05 ⇨
CIVIC VIII 1.8 EXS Flex	R18A1	11/06 ⇨
CR-V II 2.0	R20A1	06/04 ⇨
CR-V III 2.0 i	R20A2	01/07 ⇨
CR-V III 2.0 i-VTEC	R20A2	01/07 ⇨ 06/12
CR-V III 2.0 i-VTEC 4WD	R20A2	10/06 ⇨ 06/12
CR-V IV 2.0	R20A9	01/12 ⇨
FR-V 1.8	R18A1	01/07 ⇨

FACET 9.6427 — 05,5

COILS

Adatt./Suitable:

HITACHI
133944
2503944
CM11-118
HONDA
30521-RBJ-003
30521-RBJ-013
30521-RBJ-S01

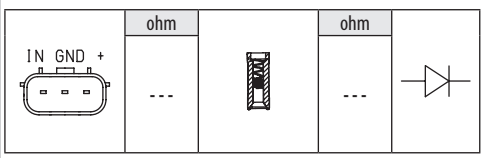

HONDA		
INSIGHT 1.3 IMA	LDA3	04/09 ⇨
JAZZ III 1.3 HYBRID	LDA3	04/11 ⇨

FACET 9.6429 — 05,5

COILS

Adatt./Suitable:

BOSCH
0 986 JG1 225
HITACHI
133910
2503910
CM11-109
CM11-112
HONDA
30520-PWA-003
30520-PWA-013
30520-PWA-S01
30520-REA-Z01
MAGNETI MARELLI
060810229010

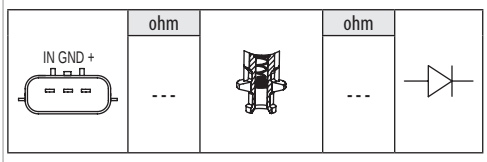

HONDA		
JAZZ II 1.2	L12A4	01/06 ⇨
JAZZ II 1.4	L13A6	01/06 ⇨
CITY 1.2	L12A2	05/03 ⇨
CITY 1.3	L13A3	10/05 ⇨ 07/08
CITY 1.5 i i-DSI	L15A2	11/02 ⇨
CIVIC VII 1.3 IMA	LDA1	10/03 ⇨ 09/05
JAZZ I 1.2 i-DSI	L12A1, L12A3, L12A4	03/02 ⇨ 07/08
JAZZ I 1.3 iDSi	L13A1, L13A6	03/02 ⇨ 07/08
JAZZ I 1.4	L13A5	04/05 ⇨ 07/08
JAZZ I 1.4 iDSI	L13A1, L13A6	12/06 ⇨ 10/08
CIVIC VIII 1.3 IMA	LDA2	01/06 ⇨
CIVIC VIII 1.4	L13A7	09/05 ⇨

FACET 9.6432

07

COILS

Adatt./Suitable:

BOSCH
0 221 503 490
0 221 503 491

FORD
1 053 904 *1
1 066 102 *1
1 067 601
1 075 786
1 111 212
1 111 213 *1
1 119 835
1 130 402
1 317 972
1 319 788
1 319 929
1 517 813
1 619 343
1S7G-12029-AB
1S7G-12029-AC
1S7G-12029-AD
988F-12024-AB *1
988F-12029-AB
988F-12029-AC
988F-12029-AD
988F-12029-AE
988F-12029-BA
988F-12257-AB *1
9BBF-10029-BA
YM2F-12024-AC *1
YM2F-12024-AD
YM2F-12029-AA
YM2F-12029-AB

HITACHI
138800
138803
138809
138811
2508800
2508803
2508809
2508811

MAGNETI MARELLI
060717036012
060717038012
060717178012
060801005010
BAE 680 C

MAZDA
1E03-18-10X *1
1E03-18-10XA *1
1E04-18-10X
1E05-18-100B
1F20-18-100
1F20-18-100A
C201-18-100
C201-18-100A
C201-18-100B
LF01-18-100
LF01-18-100A
YF09-18-10X

VOLVO
30735759
31359976

*1 **Without fastening clamp**
- Senza staffa di fissaggio
- sans bride de fixation
- ohne Befestigungsbügel
- sin estribo de sujeción

245 **without fastening clamp**
- senza staffa fissaggio
- sans bride de fixation
- ohne Befestigungsbügel
- sin estribo de sujeción

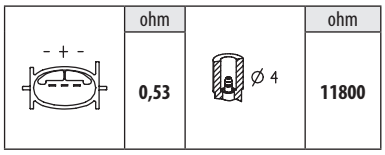

FORD		
FIESTA V 1.25 16V	FUJA, FUJB, M7JA, M7JB	05/02 ⇨ 06/08
FIESTA V 1.3	A9JA, A9JB, BAJA	11/01 ⇨ 08/08
FIESTA V 1.4	FXJA	05/02 ⇨ 09/05
FIESTA V 1.4 16V	FXJA, FXJB	11/01 ⇨ 06/08
FIESTA V 1.6 16V	FYJA, FYJB	11/01 ⇨ 06/08
FIESTA V ST150	N4JB	03/05 ⇨ 06/08
COUGAR 2.0 16V	EDBA, EDBB, EDBC, EDBD	08/98 ⇨ 12/01
ESCORT-NOMADE 1.6	8LH7(98CUL4), ZH16L1E	01/95 ⇨ 04/00
ESCORT-NOMADE 1.8	0LW2(273CUV8)	01/95 ⇨ 04/00
ESCORT IV 1.6 16V	L1E, L1K	10/98 ⇨ 07/00
ESCORT VI 1.3	J4B, J6A	01/95 ⇨ 02/99
ESCORT VI 1.6 16V	L1E, L1K	01/95 ⇨ 07/00
ESCORT VI 1.6 16V 4x4	L1E	01/95 ⇨ 10/98
ESCORT VI 1.6 16V XR3i	L1E, L1H, L1K	02/95 ⇨ 09/99
ESCORT VI 1.6 i 16V	L1E, L1H, L1K	01/95 ⇨ 02/99
ESCORT VI 1.8 16V	RDA, RKC	01/95 ⇨ 02/99
ESCORT VI 1.8 16V XR3i	RDA, RKC, RQB	02/95 ⇨ 08/98
FIESTA IV 1.0 i	0EAL	04/96 ⇨ 09/99
FIESTA IV 1.25 i 16V	DHA, DHB, DHC, DHD, DHE, DHF, DHG	08/95 ⇨ 01/02
FIESTA IV 1.3 i	J4C, J4J, J4L, J4Q, J4R, J4T, JBC, JJA, JJC, JJE, JJJ, JJK, JJM	08/95 ⇨ 01/02
FIESTA IV 1.4	FHA	08/98 ⇨ 04/02
FIESTA IV 1.4 i 16V	FHA, FHE	04/96 ⇨ 01/02
FIESTA IV 1.6 16V Sport	L1T, L1V	02/00 ⇨ 01/02
FIESTA 1.2	DHA, DHB, DHC, DHD, DHF, DHG	01/96 ⇨ 04/02
FIESTA 1.3	J4C, J4J, J4R	09/95 ⇨ 08/03
FOCUS I 1.4	FXDA, FXDB, FXDC, FXDD	04/99 ⇨ 03/05
FOCUS I 1.4 16V	FXDA, FXDB, FXDC, FXDD	10/98 ⇨ 11/04
FOCUS I 1.6	FYDA, FYDB, FYDC, FYDD	04/99 ⇨ 03/05
FOCUS I 1.6 16V	--, FYDA, FYDB, FYDC, FYDD, FYDH	02/99 ⇨ 11/04
FOCUS I 1.6 16V Flexifuel	FYDH	01/02 ⇨ 11/04
FOCUS I 1.8	EYDB, EYDC, EYDD, EYDE, EYDF, EYDG	04/99 ⇨ 03/05
FOCUS I 1.8 16V	EYDB, EYDC, EYDD, EYDE, EYDF, EYDG, EYDI, EYDJ, EYDL	10/98 ⇨ 11/04
FOCUS I 1.8 16V BiFuel	EYDD, EYDG, EYDI	09/02 ⇨ 07/04
FOCUS I 1.8 BiFuel	EYDL	02/03 ⇨ 01/05
FOCUS I 2.0 16V	EDDB, EDDC, EDDD, EDDF	10/98 ⇨ 11/04
FOCUS I RS	HMDA	10/02 ⇨ 11/04
FOCUS I ST170	ALDA	03/02 ⇨ 11/04
FOCUS II 1.4	ASDA, ASDB	07/04 ⇨ 09/12
FOCUS II 1.6	HWDA, HWDB, SHDA, SHDB, SHDC	07/04 ⇨ 09/12
FOCUS II 1.6 Ti	HXDA, HXDB, SIDA	07/04 ⇨ 09/12
FOCUS C-MAX 1.6	HWDA, HWDB, SHDA, SHDB, SHDC	10/03 ⇨ 03/07
FOCUS C-MAX 1.6 Ti	HXDA, HXDB, SIDA	08/04 ⇨ 03/07
FUSION 1.25	--, FUJA, FUJB	10/02 ⇨
FUSION 1.3	--, BAJA	08/02 ⇨
FUSION 1.4	--, FXJA, FXJB, FXJC	08/02 ⇨
FUSION 1.6	FYJA, FYJB, FYJC	08/02 ⇨ 11/09
FUSION 2.0	--	11/04 ⇨
GALAXY I 2.0	ZVSA	03/96 ⇨ 03/06
GALAXY I 2.0 i	NSE, ZVSA	11/95 ⇨ 05/06
GALAXY I 2.3	E5SA, E5SB	05/00 ⇨ 03/06
GALAXY I 2.3 16V	E5SA, E5SB, Y5B	09/01 ⇨ 05/06
IKON 1.3 Rocam	--	10/00 ⇨
KA I 1.3	A9A, A9B	09/02 ⇨ 03/04
KA I 1.3 i	BAA, J4D, J4K, J4M, J4N, J4P, J4S, JJB, JJD, JJF, JJG, JJH, JJL	09/96 ⇨ 11/08
KA I 1.3 i ROCAM	A9A, A9B	08/02 ⇨ 11/08
KA I 1.6 i	CCA, CDB, CDC, HL16SL9B	02/01 ⇨ 11/08
MAVERICK 2.0 16V	YF	02/01 ⇨
MAVERICK 2.0 16V FWD	YF	02/01 ⇨
MONDEO I 1.6 i	L1J	08/96 ⇨ 09/00
MONDEO I 1.6 i 16V	L1L, L1N, L1Q	05/98 ⇨ 09/00
MONDEO I 1.8 i	RKA, RKB, RKF, RKH, RKJ, RKK	08/96 ⇨ 09/00
MONDEO I 2.0 i	NGA, NGB, NGC, NGD	08/96 ⇨ 09/00
MONDEO II 1.8 16V	CGBA, CGBB, CHBA, CHBB	10/00 ⇨ 03/07
MONDEO II 2.0 16V	CJBA, CJBB	10/00 ⇨ 03/07
PUMA 1.4 16V	FHD, FHF	11/97 ⇨ 10/00
PUMA 1.6 16V	L1W	08/00 ⇨ 06/02
PUMA 1.7 16V	MHA, MHB	03/97 ⇨ 06/02
PUMA Racing ST 160	MHA	06/99 ⇨ 06/02
STREET KA 1.6	CDRA, CDRB	05/03 ⇨ 07/05
TOURNEO 1.8 BiFuel	EYPDCNG	08/05 ⇨ 12/06
TOURNEO 1.8 LPG	EYPC	08/05 ⇨ 12/06
TOURNEO CONNECT I 1.8 16V	EYPA, EYPC, EYPD	06/02 ⇨ 12/13
TRANSIT 1.8 CNG	EYPDCNG	05/02 ⇨ 12/13
TRANSIT CONNECT I 1.8 16V	EYPA, EYPC, EYPD	06/02 ⇨ 12/13
TRANSIT CONNECT I 1.8 16V LPG	EYPA, EYPC, EYPD	06/02 ⇨ 12/13

FORD (BR)		
FIESTA 1.0i	ZL10	07/99 ⇨
FIESTA 1.6i	ZL16	07/99 ⇨

MAZDA		
121 1.3	1E03, 1E04	01/96 ⇨ 05/97
121 III 1.25	1E05	03/96 ⇨ 04/03
121 III 1.3	1E03, 1E04, 1E09, J4R, J4T, JJK, JJM	03/96 ⇨ 04/03
2 I 1.2	FUJA	02/03 ⇨ 06/07
2 I 1.25	FUJA	04/03 ⇨ 06/07
2 I 1.3 L	ZJ-04	04/03 ⇨ 06/07
2 I 1.4	FXJA	02/03 ⇨ 06/07
2 I 1.5	ZY-VE	04/03 ⇨ 06/07
2 I 1.6	FYJA	02/03 ⇨ 06/07
TRIBUTE 2.0	0L65(396CUV8)	03/00 ⇨ 05/08
TRIBUTE 2.0 4WD	1L33(425CUV8)	03/00 ⇨ 05/08
TRIBUTE 2.0i [USA]	B	05/00 ⇨
TRIBUTE 2.0i 4x4 [USA]	B	05/00 ⇨

VOLVO		
S40 II 1.6	B4164S3	01/05 ⇨ 12/12
V50 1.6	B4164S3	01/05 ⇨ 12/12

FACET 9.6433

05,5

COILS

Adatt./Suitable:

HITACHI
2503902

INFINITI
22448-JA10C
22448-JA11C

NISSAN
22448-JA10A
22448-JA10C
22448-JA11C

RENAULT
22 44 8JA 10C

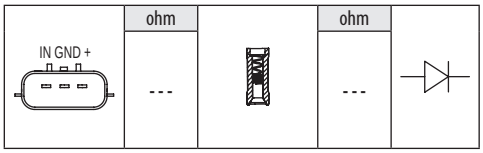

INFINITI		
EX35 3.5 V6	VQ35HR	04/08 ⇨
FX 35	VQ35HR	07/08 ⇨ 12/11
FX 35 AWD	VQ35HR	07/08 ⇨ 12/10
M 25	VQ25HR	07/10 ⇨
M 35h	VQ35HR	04/11 ⇨
G SERIES 3.5 V6	VQ35HR	12/06 ⇨
G 25	VQ25HR	01/11 ⇨
G 35 X	VQ35HR	01/07 ⇨ 12/08
JX 3.5 AWD	VQ35DE	11/12 ⇨ 09/13
M35 3.5	VQ35HR	09/08 ⇨ 12/10
M35 3.5 h	VQ35HR	01/10 ⇨
M35 3.5 X	VQ35HR	09/08 ⇨ 12/10
Q50 50 Hybrid	VQ35HR	04/13 ⇨
Q50 50 Hybrid AWD	VQ35HR	04/13 ⇨
Q70 2.5	VQ25HR	05/15 ⇨
Q70 3.5 Hybrid	VQ35HR	03/13 ⇨
QX50 2.5 AWD	VQ25HR	02/14 ⇨
QX60 3.5 AWD	VQ35DE	10/13 ⇨

NISSAN		
MURANO 3.5 CVTC 4x4	VQ35DE	03/13 ⇨ 09/14
MURANO III 3.5 V6	VQ35DE	01/16 ⇨
MURANO III 3.5 V6 ALL MODE 4x4-i	VQ35DE	10/14 ⇨
MURANO II 3.5	VQ35DE	11/07 ⇨ 09/14
MURANO II 3.5 4x4	VQ35DE	11/07 ⇨ 09/14
TEANA II 2.5	VQ25DE	07/08 ⇨ 09/13
TEANA II 3.5	VQ35DE	07/08 ⇨ 09/13
TEANA III 3.5	VQ35DE	01/14 ⇨
TEANA III 3.5 CVTC	VQ35DE	01/14 ⇨
PATHFINDER IV 3.5 4WD	VQ35DE	09/12 ⇨

RENAULT		
LAGUNA III 3.5 V6	8TZ150XSG15	04/08 ⇨ 12/15
LATITUDE 2.5 V6	2ZV604	05/11 ⇨
LATITUDE 3.5	5ZV604	05/11 ⇨

FACET 9.6435 — 07,5

COILS

Adatt./Suitable:

HITACHI
2503947

MAGNETI MARELLI
060717159012

SUZUKI
33400-65G00
33400-65G00-000
33400-65G01
33400-65G01-000
33400-65G02
33400-65G02-000

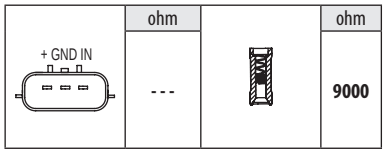

SUZUKI		
ALTO VI 1.1	F10D, F10DN	09/04 ⇨ 12/08
BALENO 1.6	G16B	07/96 ⇨ 01/99
BALENO 1.6 i 16V	G16B	07/95 ⇨ 05/02
BALENO 1.6 i 16V 4x4	G16B	07/95 ⇨ 05/02
CARRY 1.3	G13BB	02/99 ⇨ 12/06
CARRY 1.3 16 V	G13BB	03/00 ⇨
ESTEEM 1.6i [USA]	G16B	09/98 ⇨
GRAND VITARA II 1.6	M16A	10/05 ⇨
GRAND VITARA II 1.6 4x4	M16A	09/05 ⇨ 02/15
GRAND VITARA II 1.6 Trazione integrale	M16A	04/05 ⇨ 02/15
SWIFT IV 1.3	M13A	02/05 ⇨
SWIFT IV 1.3 4x4	M13A	02/05 ⇨
SWIFT IV 1.3 LPG	M13A	09/08 ⇨ 12/10
SWIFT IV 1.5	M15A	02/05 ⇨
SWIFT IV 1.5 4x4	M15A	02/05 ⇨
SWIFT IV 1.6	M16A	05/06 ⇨
SWIFT IV 1.6 4x4	M16A	02/05 ⇨
IGNIS I 1.3	M13A	10/00 ⇨ 09/03
IGNIS I 1.3 4WD	M13A	10/00 ⇨ 09/03
IGNIS I 1.5 Sport	M15A	12/03 ⇨ 12/05
JIMNY III 1.3 4WD	M13A	03/13 ⇨
LIANA 1.3	M13A	07/01 ⇨
LIANA 1.6	M16A	07/01 ⇨
LIANA 1.6 4WD	M16A	07/01 ⇨
LIANA 1.6 i	M16A	04/02 ⇨
LIANA 1.8 i	M18A	10/01 ⇨
SX4 I 1.5	M15A	06/06 ⇨ 07/10
SX4 I 1.5 VVT	M15A	07/10 ⇨
SX4 I 1.5 VVT 4x4	M15A	07/10 ⇨
SX4 I 1.5 VVTi	M15A	07/07 ⇨ 12/15
SX4 I 1.6	M16A	10/07 ⇨
SX4 I 1.6 AWD	M16A	10/07 ⇨
SX4 I 1.6 LPG	M16A	06/06 ⇨ 12/12
SX4 I 1.6 VVT	M16A	06/06 ⇨
SX4 I 1.6 VVT 4x4	M16A	06/06 ⇨
WAGON R+ II 1.3	G13BB, M13A	05/00 ⇨
WAGON R II 1.3	G13BB	04/99 ⇨ 10/00

FACET 9.6436 — 05,5

COILS

Adatt./Suitable:

LEXUS
90919-02258

TOYOTA
90919-02252
90919-02258

NEW - ITEM NOW AVAILABLE FROM PRODUCTION
- NUOVO - ARTICOLO ORA DISPONIBILE PER LA VENDITA
- NOUVEAU - ARTICLE DISPONIBLE EN PRODUCTION COURANTE
- NEU - JETZT ZUM VERKAUF VERFÜGBARER ARTIKEL
- NUEVO - ARTICULO AHORA DISPONIBLE EN PRODUCCION

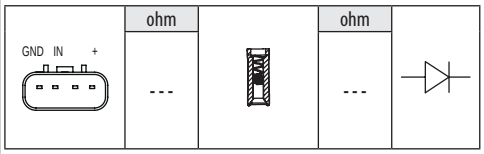

LEXUS		
CT 200h	2ZR-FXE	12/10 ⇨
NX 200	3ZR-FAE	11/14 ⇨
NX 200 AWD	3ZR-FAE	11/14 ⇨
TOYOTA		
COROLLA X 1.6	1ZR-FAE, 1ZR-FE	11/06 ⇨ 11/13
COROLLA X 1.6 Dual VVTi	1ZR-FE	01/07 ⇨ 07/14
COROLLA X 1.6 VVTi	1ZR-FE	03/07 ⇨ 05/14
COROLLA X 1.8	2ZR-FAE, 2ZR-FE	09/06 ⇨
COROLLA X 1.8 4WD	2ZR-FAE	09/06 ⇨
COROLLA X 1.8 VVTi	2ZR-FBE, 2ZR-FE	08/10 ⇨
COROLLA X 2.0	3ZR-FE	04/10 ⇨
COROLLA X 2.0 FlexFuel	3ZR-FBE	04/10 ⇨
COROLLA X 2.0 VVTi	3ZR-FE	08/10 ⇨
AURIS I 1.6	1ZR-FAE, 1ZR-FE	03/07 ⇨ 09/12
AURIS I 1.8	2ZR-FAE, 2ZR-FE	10/06 ⇨ 09/12
AURIS I 1.8 4WD	2ZR-FAE	10/06 ⇨ 10/09
AURIS I 1.8 Hybrid	2ZR-FXE	09/10 ⇨ 09/12
AURIS II 1.6	1ZR-FAE	10/12 ⇨ 12/18
AURIS II 1.8 Hybrid	2ZR-FXE	10/12 ⇨ 12/18
AVENSIS III 1.6	1ZR-FAE	11/08 ⇨ 10/18
AVENSIS III 1.8	2ZR-FAE	11/08 ⇨ 10/18
AVENSIS III 2.0	3ZR-FAE, 3ZR-FE	11/08 ⇨ 10/18
C-HR 2.0	3ZR-FAE	11/16 ⇨
COROLLA IX 1.6	1ZR-FE	11/06 ⇨ 07/07
COROLLA XI 1.6	1ZR-FAE, 1ZR-FE	06/13 ⇨ 12/18
COROLLA XI 1.6 BiFuel	1ZR-FE	06/13 ⇨
COROLLA XI 1.8	2ZR-FAE	05/12 ⇨
COROLLA XI 1.8 [USA] [CAN]	2ZR-FAE	08/13 ⇨
COROLLA XI 1.8 VVTi	2ZR-FE	06/13 ⇨ 08/19
COROLLA XI 1.8 VVT-i	2ZR-FE	12/13 ⇨
COROLLA XI 2.0 VVT-i CNG	3ZRFECNG	10/13 ⇨ 12/18
COROLLA 1.6 VVTi	1ZR-FAE, 1ZR-FE	01/19 ⇨
MATRIX 1.8	2ZR-FE	01/08 ⇨ 05/14
RAV 4 IV 2.0	3ZR-FE	12/12 ⇨
RAV 4 IV 2.0 4WD	3ZR-FAE, 3ZR-FE	12/12 ⇨
PRIUS III 1.8 Hybrid	2ZR-FXE, 5ZR-FXE	06/08 ⇨
PRIUS 1.8 Plug-In Hybrid	2ZR-FXE	01/12 ⇨
PRIUS PLUS 1.8 Hybrid	2ZR-FXE	11/14 ⇨
RAV 4 2.0 VVTi 4WD	3ZR-FAE	12/12 ⇨ 11/18
RAV 4 III 2.0	3ZR-FAE	12/08 ⇨ 06/13
RAV 4 III 2.0 4WD	3ZR-FAE	12/08 ⇨ 06/13
VERSO 1.6	1ZR-FAE	04/09 ⇨ 08/18
VERSO 1.8	2ZR-FAE	04/09 ⇨ 08/18
VERSO VVTi	1ZR-FAE, 2ZR-FAE	04/09 ⇨ 08/18
YARIS II 1.6 [CHN]	1ZR-FE	05/08 ⇨
YARIS II 1.8 VVTi	2ZR-FE	01/07 ⇨ 12/11
YARIS III 1.8 GRMN	2ZR-FE	09/17 ⇨

FACET 9.6437 — 05,5

COILS

Adatt./Suitable:

ASTON MARTIN
9091902257

BOSCH
0 986 AG0 501
F 005 X11 797

DAIHATSU
90919-02257

DENSO
DIC-0132
DIC-0147

HITACHI
134038
2504038

LEXUS
90919-02250
90919-02256
90919-A2003
90919-A2005
90919-C2004

SUBARU
90919-02257

TOYOTA
90919-02250
90919-02256
90919-02257
90919-A2003
90919-A2005
90919-A2008
90919-C2004

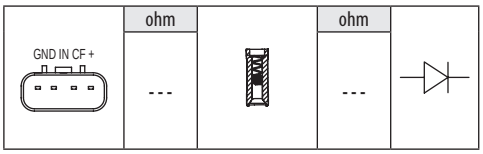

ASTON MARTIN		
CYGNET 1.3	1NR-FE	04/11 ⇨ 10/13
DAIHATSU		
CHARADE VI 1.33 16V	1NR-FE	05/11 ⇨
LEXUS		
ES 200	6AR-FSE	08/15 ⇨
ES 250	2AR-FE	06/12 ⇨ 06/18
ES 300h	2AR-FXE	06/12 ⇨ 06/18
GS 250	4GR-FSE	01/12 ⇨
GS 3.5 450h	2GR-FXE	03/12 ⇨ 09/18
GS 3.5 VVTi	2GR-FSE	04/05 ⇨ 12/12
GS 300	3GR-FE, 3GR-FSE	04/05 ⇨ 11/11
GS 300h	2AR-FSE	10/13 ⇨
GS 350	2GR-FSE	09/06 ⇨
GS 350 AWD	2GR-FKS, 2GR-FSE	09/06 ⇨
GS 450h	2GR-FSE, 2GR-FXE	02/06 ⇨
GX 460 4WD	1UR-FE	01/10 ⇨
IS II 250	4GR-FSE	08/05 ⇨
IS II 250 AWD	4GR-FSE	10/05 ⇨ 03/13
IS II 350	2GR-FSE	01/08 ⇨
IS III 250	4GR-FSE	04/13 ⇨
IS III 300h	2AR-FSE	04/13 ⇨
LS IV 460	1UR-FE, 1UR-FE-E4, 1UR-FE-E5, 1UR-FSE, 1UR-FSE-E4, 1UR-FSE-E5	04/06 ⇨
LS IV 460 4WD	1UR-FSE	08/06 ⇨
LS IV 460 AWD	1UR-FE-E4, 1UR-FSE	12/08 ⇨
LS IV 600h AWD	2UR-FSE, 2URFSE-E4, 2UR-FSE-E5	04/07 ⇨
LX 570	3UR-FE	08/07 ⇨
NX 300h	2AR-FXE	07/14 ⇨
NX 300h AWD	2AR-FXE	07/14 ⇨
RC 300h	2AR-FSE	09/14 ⇨
RC 350	2GR-FSE	08/14 ⇨
RX III 270	1AR-FE	12/08 ⇨ 10/15
RX III 450h AWD	2GR-FXE, 2GRFXE(299H)-E4	12/08 ⇨ 10/15
SUBARU		
TREZIA 1.3	1NR-FE	03/11 ⇨
TOYOTA		
COROLLA X 1.33	1NR-FE	12/08 ⇨ 07/14
AURIS I 1.33 Dual-VVTi	1NR-FE	05/09 ⇨ 09/12
AURIS II 1.3	1NR-FE	10/12 ⇨ 12/18

TOYOTA		
CAMRY 2.0	6ARFSE	12/14 ⇨
CAMRY 2.5	2AR-FE	01/10 ⇨
CAMRY 2.5 [CHN]	5AR-FE	12/11 ⇨
CAMRY 2.5 Hybrid	2AR-FXE	09/11 ⇨
CAMRY 2.5 Hybrid [CHN]	4AR-FXE	05/12 ⇨
COROLLA XI 1.3	1NR-FE	05/12 ⇨
LAND CRUISER 200 4.0	1GR-FE	01/10 ⇨
LAND CRUISER 200 4.6 V8	1UR-FE	09/10 ⇨
LAND CRUISER 200 5.7 V8	3UR-FE	08/07 ⇨
FJ CRUISER 4.0	1GR-FE	06/05 ⇨ 06/14
FJ CRUISER 4.0 4WD	1GR-FE	06/05 ⇨ 01/18
HIGHLANDER / KLUGER 2.7	1AR-FE	09/16 ⇨
IQ 1.33	1NR-FE	01/09 ⇨
LAND CRUISER 4.0 V6 VVTi	1GR-FE	08/09 ⇨
LAND CRUISER 150 4.0 V6 Dual VVTi	1GR-FE	08/09 ⇨
LAND CRUISER 150 4.0 V6 VVTi	1GR-FE	08/09 ⇨
LAND CRUISER 150 4.0 V6 VVT-i	1GR-FE	08/09 ⇨
RAV 4 IV 2.5	2AR-FE	12/12 ⇨ 11/18
RAV 4 IV 2.5 4WD	2AR-FE	12/12 ⇨
RAV 4 IV 2.5 Hybrid	2AR-FXE	10/15 ⇨ 11/18
RAV 4 IV 2.5 Hybrid 4WD	2AR-FXE	10/15 ⇨ 12/18
RAV 4 III 2.5	2AR-FE	12/08 ⇨
SIENNA 2.7	1AR-FE	09/10 ⇨ 07/13
URBAN CRUISER 1.33	1NR-FE	01/09 ⇨ 03/16
VENZA 2.7	1AR-FE	11/08 ⇨ 11/16
VENZA 2.7 4WD	1AR-FE	11/08 ⇨ 11/16
VERSO S 1.33	1NR-FE	11/10 ⇨ 10/16
YARIS II 1.33 VVT-i	1NR-FE	11/08 ⇨ 12/11
YARIS III 1.3	1NR-FE	09/11 ⇨
YARIS III 1.3 4WD	1NR-FE	12/10 ⇨
YARIS III 1.3 VVTi	1NR-FE	10/12 ⇨
YARIS III 1.5	2NR-FKE	03/17 ⇨
YARIS III 1.5 VVTi	2NR-FKE	03/17 ⇨

FACET 9.6438 — 05,5

COILS

Adatt./Suitable:

LEXUS
90919-02251
90919-02255
90919-A2004
90919-A2007

TOYOTA
90919-02251
90919-02255
90919-A2002
90919-A2004
90919-A2007

- **NEW - ITEM NOW AVAILABLE FROM PRODUCTION**
- NUOVO - ARTICOLO ORA DISPONIBILE PER LA VENDITA
- NOUVEAU - ARTICLE DISPONIBLE EN PRODUCTION COURANTE
- NEU - JETZT ZUM VERKAUF VERFÜGBARER ARTIKEL
- NUEVO - ARTICULO AHORA DISPONIBLE EN PRODUCCION

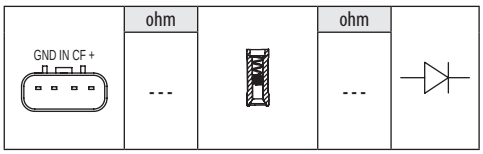

LEXUS		
ES 3.5	2GR-FE	05/06 ⇨ 06/12
ES 350	2GR-FE	06/12 ⇨ 06/18
RX II 350	2GR-FE	01/06 ⇨ 12/08
RX II 350 AWD	2GR-FE, 2GRFE(276)	02/06 ⇨ 12/08
RX III 350	2GR-FE	01/09 ⇨ 09/15
RX III 350 AWD	2GR-FE	12/08 ⇨ 08/15
RX III 450h	2GR-FXE	12/08 ⇨ 10/15
RX III 450h AWD	2GR-FXE	12/08 ⇨ 10/15

TOYOTA		
AURION 3.5	2GR-FE	03/06 ⇨
CAMRY 3.5	2GR-FE	01/06 ⇨
HIGHLANDER / KLUGER 3.5 AWD	2GR-FE, 2GR-FKS	09/14 ⇨
RAV 4 III 3.5 4WD	2GR-FE	11/05 ⇨
SIENNA 3.5	2GR-FE	01/10 ⇨
SIENNA 3.5 4WD	2GR-FE	01/10 ⇨
PREVIA III 3.5	2GR-FE	01/06 ⇨
PREVIA III 3.5 4WD	2GR-FE	01/06 ⇨
VENZA 3.5	2GR-FE	11/08 ⇨ 11/16
VENZA 3.5 4WD	2GR-FE	11/08 ⇨ 11/16

FACET 9.6443 — 05,5

COILS

Adatt./Suitable:

BOSCH
0 986 221 063

HITACHI
134035
2504035

HYUNDAI
27301-2B010

KIA
27301-2B010

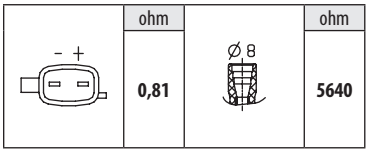

HYUNDAI		
ACCENT 1.4 CVVT	G4FA	11/10 ⇨
CRETA 1.6	G4FG	01/16 ⇨
CRETA 1.6 4WD	G4FG	08/16 ⇨
ELANTRA V 1.6	G4FG	04/11 ⇨
ACCENT IV 1.4	G4FA	11/10 ⇨
ACCENT IV 1.6	G4FC	11/10 ⇨
I20 I 1.4	G4FA	09/08 ⇨ 12/15
I20 I 1.4 LPG	G4FA	12/08 ⇨ 12/12
I20 I 1.6	G4FC	09/08 ⇨ 12/12
I30 I 1.4	G4FA	10/07 ⇨ 06/12
I30 I 1.4 LPG	G4FA	01/09 ⇨ 06/12
I30 I 1.6	G4FC	10/07 ⇨ 06/12
I30 II 1.4	G4FA, G4LC	12/11 ⇨
I30 II 1.4 LPG	G4FA	01/13 ⇨
I30 II 1.6	G4FC, G4FG	12/11 ⇨
I30 II 1.6 MPI	G4FC	06/14 ⇨
IX20 1.4	G4FA	11/10 ⇨
IX20 1.4 LPG	G4FA	11/10 ⇨
IX20 1.6	G4FC	11/10 ⇨
IX20 1.6 LPG	G4FC	11/10 ⇨
SB 11 1.4	--	01/11 ⇨
SB 11 1.6	--	01/11 ⇨
SOLARIS 1.4 16V	--	01/11 ⇨
SOLARIS 1.4 VVTi	G4FA	11/10 ⇨
SOLARIS 1.6	G4FG	01/17 ⇨
SOLARIS 1.6 16V	--	01/11 ⇨
VELOSTER 1.6	G4FG	06/11 ⇨
VELOSTER 1.6 MPI	G4FC	04/11 ⇨ 12/17

KIA		
CARENS II 1.6 CVVT	G4FC	08/09 ⇨
CEED I 1.4	G4FA	12/06 ⇨ 12/12
CEED I 1.4 CVVT	G4FA, G4FA-L	07/09 ⇨ 12/12
CEED I 1.4 LPG	G4FA	01/09 ⇨ 04/12
CEED I 1.6	G4FC	12/06 ⇨ 12/12
CEED I 1.6 CVVT	G4FC	06/09 ⇨ 12/12
CEED I 1.6 LPG	G4FC	06/07 ⇨ 09/12
CEED II 1.4 CVVT	G4FA, G4FA-L	05/12 ⇨ 07/18
CEED II 1.4 LPG	G4FA	05/12 ⇨ 07/18
CEED II 1.6 CVVT	G4FC	05/12 ⇨
CEED III 1.6	G4FG	03/18 ⇨
CERATO I 1.6	G4FC	05/06 ⇨
CERATO II 1.6	G4FC	01/10 ⇨ 06/13
CERATO II 1.6 CVVT	G4FC	02/09 ⇨
CERATO III 1.6	--	07/12 ⇨
CERATO III 1.6 CVVT	G4FC	07/16 ⇨
CERATO III 1.6 MPi	G4FG	06/13 ⇨
FORTE 1.6	--	07/12 ⇨
PRO CEE'D I 1.4	G4FA	02/08 ⇨ 09/12
PRO CEE'D I 1.4 CVVT	G4FA, G4FA-L	06/10 ⇨ 09/12

KIA		
PRO CEE'D I 1.6	G4FC	02/08 ⇨ 09/12
PRO CEE'D I 1.6 CVVT	G4FC	02/08 ⇨ 02/13
PRO CEE'D II 1.4 CVVT	G4FA	03/13 ⇨ 07/18
PRO CEE'D II 1.4 MPI	G4LC	07/13 ⇨ 07/18
PRO CEE'D II 1.6 CVVT	G4FC	03/13 ⇨ 07/18
PRO CEE'D 1.4 CVVT	G4FA	05/12 ⇨ 07/18
RIO III 1.4 CVVT	G4FA	06/11 ⇨
RIO III 1.6 CVVT	G4FC	06/12 ⇨ 12/17
RIO IV 1.6	G4FG	01/17 ⇨
SOUL I 1.6	G4FC	09/09 ⇨ 12/14
SOUL I 1.6 CVVT	G4FC	02/09 ⇨ 12/14
SOUL I 1.6 Flex	--	01/11 ⇨
SOUL I 1.6 LPG	G4FC	02/09 ⇨ 12/14
SOUL II 1.6 CVVT	G4FG	02/14 ⇨
SOUL II 1.6 LPG	G4FG	12/14 ⇨
SOUL III 1.6 MPi	G4FG	01/19 ⇨
VENGA 1.4 CVVT	G4FA, G4FA-L	02/10 ⇨
VENGA 1.4 LPG	G4FA	02/10 ⇨
VENGA 1.6 CVVT	G4FC	02/10 ⇨
VENGA CVVT	G4FA, G4FC	02/15 ⇨

FACET 9.6445 — 08,6

COILS

Adatt./Suitable:

BOSCH
0 986 221 098
0 986 221 109

CHEVROLET
25186687
55561655
55584404
96476983

GENERAL MOTORS
25 186 687
55 561 655
55 584 404
96 476 983

OPEL
12 08 086
12 08 098
55561655
55584404

SIEMENS
5WK 9397

VAUXHALL
55561655
55584404

- **NEW - AVAILABLE FROM:**
- NUOVO - DISPONIBILE DA:
- NOUVEAU - DISPONIBILE EN:
- NEU - VERFUEGBAR AB:
- NUEVO - DISPONIBILE EN:

22/04

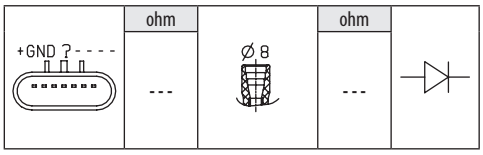

CHEVROLET		
AVEO II 1.6	LDE	03/11 ⇨
CRUZE 1.6	LDE	06/11 ⇨
TRAX 1.6	LDE	12/12 ⇨
TRAX 1.8	2H0	03/13 ⇨
TRAX 1.8 AWD	2H0	03/13 ⇨

OPEL		
ASTRA J 1.6	A16LET, A16XER, B16XER	12/09 ⇨
ASTRA J 1.6 LPG	A16XER	10/12 ⇨ 10/15
ASTRA J 1.6 Turbo	A16LET	12/09 ⇨
ASTRA J 1.8	A18XER	10/11 ⇨ 10/15
ZAFIRA TOURER 1.8	A18XEL, A18XER	10/11 ⇨
ZAFIRA TOURER 1.8 LPG	A18XER	10/11 ⇨
CORSA E 1.6 Turbo	B16LER, B16LES	03/15 ⇨
INSIGNIA A 1.4	B18XER	04/11 ⇨
INSIGNIA A 1.6	A16XER	07/08 ⇨ 03/17
INSIGNIA A 1.8	A18XER, B18XER	07/08 ⇨ 03/17
MOKKA 1.6	A16XER, B16XER, D16XER	06/12 ⇨
MOKKA 1.8	A18XER	01/13 ⇨
MOKKA 1.8 4x4	A18XER	01/13 ⇨
ZAFIRA B 1.8	A18XEL	06/13 ⇨ 04/15

VAUXHALL		
ASTRA V 1.6	A16XER	08/04 ⇨ 03/11

VAUXHALL		
ASTRA V 1.8	A18XER	12/05 ⇨ 10/10
ASTRA VI 1.6	A16LET, A16XER, B16XER	12/09 ⇨ 10/15
ASTRA VI 1.6 Turbo	A16LET	12/09 ⇨ 10/15
CORSA E 1.6 VXR	B16LES	04/15 ⇨
INSIGNIA 1.6	A16XER	07/08 ⇨ 05/17
INSIGNIA 1.8	A18XER, B18XER	07/08 ⇨ 05/17
MOKKA / MOKKA X 1.6	A16XER, B16XER, D16XER	06/12 ⇨
ZAFIRA B 1.8	A18XEL	04/13 ⇨ 11/14
ZAFIRA C 1.8	A18XEL, A18XER	10/11 ⇨

FACET 9.6447

08,5

COILS

Adatt./Suitable:

BOSCH
0 221 503 800
0 986 221 096

CHEVROLET
25195107
25198623
25200553
55575499
55577898
55579072
95528319

GENERAL MOTORS
25 195 107
25 198 623
55 573 735
55 575 499
55 577 898
55 579 072
95 528 319

HITACHI
134048
2504048

MAGNETI MARELLI
060717137012

OPEL
12 08 092
12 08 093
12 08 096
12 08 123
25195107
25198623
55573735
55577898
55579072
95528319

VAUXHALL
25195107
25198623
55573735
55577898
55579072
95528319

- **NEW - ITEM NOW AVAILABLE FROM PRODUCTION**
  - NUOVO - ARTICOLO ORA DISPONIBILE PER LA VENDITA
  - NOUVEAU - ARTICLE DISPONIBLE EN PRODUCTION COURANTE
  - NEU - JETZT ZUM VERKAUF VERFÜGBARER ARTIKEL
  - NUEVO - ARTICULO AHORA DISPONIBLE EN PRODUCCION

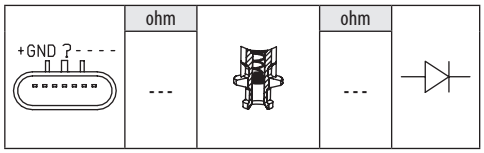

CHEVROLET		
AVEO I 1.4	A14XER	04/08 ⇨
AVEO II 1.2	LDC, LWD	03/11 ⇨
AVEO II 1.2 LPG	LDC	11/12 ⇨ 12/15
AVEO II 1.4	LDD	03/11 ⇨
AVEO II 1.4 Turbo	A14NET	08/13 ⇨
CRUZE 1.4	A14NET, A14XER, LDD, LUJ	09/10 ⇨
ORLANDO 1.4	LUJ	06/12 ⇨
TRAX 1.4	A14NET	12/12 ⇨
TRAX 1.4 AWD	A14NET	12/12 ⇨
TRAX 1.4 LPG	A14NET	04/13 ⇨
VOLT EV 150	LUU	11/11 ⇨
OPEL		
ADAM 1.2	A12XEL, B12XEL, D12XEL	10/12 ⇨ 02/19
ADAM 1.4	A14XEL, A14XER, B14XEL, B14XER, D14XEL, D14XER	10/12 ⇨ 02/19
ADAM 1.4 LPG	A14XEL, B14XEL, D14XEL	07/13 ⇨ 11/18
ADAM 1.4 S	B14NEH, D14NEH	11/14 ⇨ 01/19
AMPERA EV 150	A14XFL	11/11 ⇨ 03/15
ASTRA J 1.4	A14NEL, A14NET, A14XEL, A14XER, B14NEL, B14NET, B14XER	12/09 ⇨
ASTRA J 1.4 LPG	A14NET	12/11 ⇨

OPEL		
ASTRA J 1.4 Turbo	A14NEL, A14NET, B14NEL, B14NET	12/09 ⇨
ZAFIRA TOURER 1.4	A14NEL, A14NET, B14NEL, B14NET	10/11 ⇨
ZAFIRA TOURER 1.4 LPG	A14NET, B14NET	10/11 ⇨
CASCADA 1.4	A14NEL, B14NEL	03/13 ⇨
CASCADA 1.4 Turbo	A14NET, B14NET	03/13 ⇨
CORSA D 1.2	A12XEL, A12XER	12/09 ⇨ 08/14
CORSA D 1.2 LPG	A12XER	06/11 ⇨ 08/14
CORSA D 1.4	A14NEL, A14XEL, A14XER	09/09 ⇨ 08/14
CORSA D 1.4 LPG	A14XEL	09/09 ⇨ 08/14
CORSA E 1.2	B12XEL	09/14 ⇨
CORSA E 1.4	B14XEJ, B14XEL, D14XEL	09/14 ⇨
CORSA E 1.4 LPG	B14XEL	03/15 ⇨
CORSA E 1.4 Turbo	B14NEH, B14NEJ, D14NEH, D14NEJ	09/14 ⇨
INSIGNIA A 1.4	A14NET, B14NET	04/11 ⇨ 03/17
INSIGNIA A 1.4 LPG	A14NET, B14NET	07/12 ⇨ 03/17
MERIVA B 1.4	A14NEL, A14NET, A14XER, B14NEL, B14NET, B14XER	06/10 ⇨ 03/17
MERIVA B 1.4 LPG	A14NEL, B14NEL	06/11 ⇨ 03/17
MERIVA 1.4 ECOTEC	A14XER	01/13 ⇨ 03/17
MOKKA 1.4	A14NET, B14NET, D14NET	04/13 ⇨
MOKKA 1.4 4x4	A14NET, B14NET, D14NET	06/12 ⇨
MOKKA 1.4 LPG	A14NET, B14NET, D14NET	04/13 ⇨
VAUXHALL		
ADAM 1.2	A12XEL, B12XEL, D12XEL	10/12 ⇨ 04/19
ADAM 1.4	A14XEL, A14XER, B14XEL, B14XER, D14XEL	10/12 ⇨ 02/19
ADAM 1.4 LPG	A14XEL	07/13 ⇨
ADAM 1.4 S	B14NEH	11/14 ⇨ 01/19
AMPERA EV 150	4ET50, A14XFL	03/12 ⇨
CASCADA 1.4	A14NEL, A14NET, B14NET	02/13 ⇨
ASTRA VI 1.4	A14NEL, A14NET, A14XEL, A14XER, B14NEL, B14NET, B14XER	12/09 ⇨ 10/15
ASTRA VI 1.4 Turbo	A14NEL, A14NET, B14NET	12/09 ⇨
CORSA D 1.2	A12XEL	06/10 ⇨ 08/14
CORSA D 1.2 i 16V	A12XER	12/09 ⇨ 08/14
CORSA D 1.2 LPG	A12XER	06/11 ⇨ 08/14
CORSA D 1.4	A14NEL, A14XEL, A14XER	09/09 ⇨ 08/14
CORSA D 1.4 LPG	A14XEL	09/09 ⇨ 08/14
CORSA E 1.2	B12XEL	08/14 ⇨
CORSA E 1.4	B14NEH, B14XEJ, B14XEL, B14NEJ, D14NEJ, D14XEL	08/14 ⇨
CORSA E 1.4 LPG	B14XEL	08/14 ⇨
CORSAVAN III 1.2	A12XEL	01/10 ⇨
CORSAVAN IV 1.2	B12XEL	10/14 ⇨
CORSAVAN IV 1.4	B14XEJ	10/14 ⇨
INSIGNIA 1.4	A14NET, B14NET	04/11 ⇨ 05/17
INSIGNIA 1.4 LPG	A14NET	07/12 ⇨ 05/17
MERIVA II 1.4	A14NEL, A14NET, A14XER, B14NEL, B14NET, B14XER	06/10 ⇨
MERIVA II 1.4 LPG	A14NEL, B14NEL	06/11 ⇨
MOKKA / MOKKA X 1.4	A14NET, B14NET, D14NET	04/13 ⇨
MOKKA / MOKKA X 1.4 4x4	A14NET, B14NET, D14NET	06/12 ⇨
ZAFIRA C 1.4	A14NEL, A14NET, B14NET	10/11 ⇨ 08/18
ZAFIRA C 1.4 LPG	A14NET	10/11 ⇨ 08/18

FACET 9.6449

05,5

COILS

Adatt./Suitable:

ABARTH
55224110
55229959

ALFA ROMEO
46337742
55214926
55224110
55229959
55263679
55267630
55270217

BOSCH
0 221 504 026
0 221 504 036

CHRYSLER
55214926
55229959

FIAT
46337742
55214926
55224110
55229959
55263679
55270217

JEEP
46337742
55224110
55229959
55263679
55270217
68298269AA
K68298228AA
K68298269AA
K68436928AA

LANCIA
55214926
55229959

MAGNETI MARELLI
060810224010

- **NEW - ITEM NOW AVAILABLE FROM PRODUCTION**
  - NUOVO - ARTICOLO ORA DISPONIBILE PER LA VENDITA
  - NOUVEAU - ARTICLE DISPONIBLE EN PRODUCTION COURANTE
  - NEU - JETZT ZUM VERKAUF VERFÜGBARER ARTIKEL
  - NUEVO - ARTICULO AHORA DISPONIBLE EN PRODUCCION

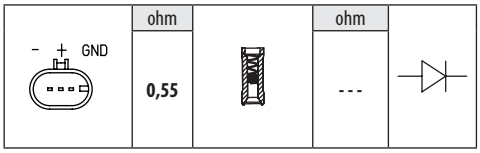

ABARTH		
PUNTO 1.4	955A8.000	03/12 ⇨
PUNTO 1.4 SUPERSPORT	199A8.000, 955A8.000	03/12 ⇨
PUNTO EVO 1.4	955A8.000	10/09 ⇨ 02/12
ALFA ROMEO		
159 1.8 TBi	939B1.000	05/09 ⇨ 12/12
4C 1.8	960A1.000	03/13 ⇨ 12/20
BRERA 1.8 TBi	939B1.000	05/09 ⇨ 06/10
GIULIETTA II 1.4	940A2.000	04/11 ⇨ 12/20
GIULIETTA II 1.4 TB	940A2.000, 940C2.000, 955A8.000	04/10 ⇨ 10/18
GIULIETTA II 1.8	940A1.000	04/11 ⇨ 02/16
GIULIETTA II 1.8 TBi	940A1.000, 940B2.000, 960A1.000	04/10 ⇨ 10/18
MITO 1.4 MultiAir	940A2.000	09/09 ⇨ 10/18
MITO 1.4 TB	955B1.000	12/13 ⇨ 10/18
MITO 1.4 Turbo MultiAir	955A2.000, 955A7.000, 955A8.000	10/09 ⇨ 10/18
SPIDER III 1.8 TBi	939B1.000	05/09 ⇨ 03/11
CHRYSLER		
DELTA 1.4 16V	198A7.000	08/11 ⇨
FIAT		
PUNTO III EVO 1.4 16V	955A2.000	10/09 ⇨ 02/12
PUNTO III 1.4 Turbo Multi Air	955A2.000	03/12 ⇨
500X 1.4	55263624	09/14 ⇨
500X 1.4 4x4	55263623	02/15 ⇨
500X 1.4 LPG	55277701	03/17 ⇨
BRAVO II 1.4 16V	--, 198A7.000	04/07 ⇨
JEEP		
COMPASS 1.4 MultiAir	EAQ(55263624)	03/17 ⇨
COMPASS 1.4 MultiAir Trazione integrale	EAQ(55263623)	03/17 ⇨
RENEGADE 1.4	55263624, EAM, EAM(55263624)	07/14 ⇨
RENEGADE 1.4 4x4	EAM, EAM(55263623)	07/14 ⇨

LANCIA		
DELTA III 1.4 16V	198A7.000	07/10 ⇨ 08/14
DELTA III 1.8	939B1.000	01/09 ⇨ 08/14

FACET 9.6451

05,5

COILS

Adatt./Suitable:

HITACHI
133929
2503929

NISSAN
22448-1KC0A

RENAULT
22 44 81K C0A

NEW - ITEM NOW AVAILABLE FROM PRODUCTION

- NUOVO - ARTICOLO ORA DISPONIBILE PER LA VENDITA
- NOUVEAU - ARTICLE DISPONIBLE EN PRODUCTION COURANTE
- NEU - JETZT ZUM VERKAUF VERFÜGBARER ARTIKEL
- NUEVO - ARTICULO AHORA DISPONIBLE EN PRODUCCION

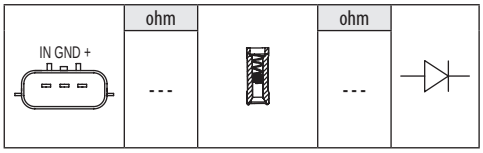

NISSAN		
JUKE I 1.6	MR16DDT	03/13 ⇨
JUKE I 1.6 DIG-T	MR16DDT	06/10 ⇨
JUKE I 1.6 DIG-T 4x4	MR16DDT	06/10 ⇨
JUKE I 1.6 DIG-T NISMO	MR16DDT	03/13 ⇨ 07/14
JUKE I 1.6 DIG-T NISMO 4x4	MR16DDT	02/13 ⇨ 07/14
JUKE I 1.6 DIG-T NISMO RS	MR16DDT	08/14 ⇨
JUKE I 1.6 DIG-T NISMO RS 4x4	MR16DDT	08/14 ⇨
X-TRAIL III 1.6 DIG-T	MR16DDT	06/15 ⇨
X-TRAIL III 2.0	MR20DD	09/14 ⇨
X-TRAIL III 2.0 ALL MODE 4x4-i	MR20DD	09/14 ⇨
PULSAR 1.6 DIG-T	MR16DDT	02/15 ⇨
SENTRA VII 1.6 DIG-T	MR16DDT	07/12 ⇨
SYLPHY III 1.6 DIG-T	MR16DDT	07/12 ⇨
QASHQAI II 1.6 DIG-T	MR16DDT	10/14 ⇨
QASHQAI II 2.0	MR20DD	06/14 ⇨
QASHQAI II 2.0 ALL MODE 4x4-i	MR20DD	10/15 ⇨
TIIDA II 1.6	MR16DDT	02/13 ⇨
TIIDA II 1.6 DIG-T	MR16DDT	08/11 ⇨
X-TRAIL 2.0	MR20DD	12/14 ⇨
X-TRAIL 2.0 ALL MODE 4x4-i	MR20DD	12/14 ⇨
RENAULT		
CLIO IV 1.6 RS	M5M400, M5M401	03/13 ⇨
CLIO IV 1.6 RS Trophy	M5M401	03/15 ⇨
MEGANE IV 1.6 TCe 165	M5M450	07/17 ⇨
MEGANE IV 1.6 TCe 205	M5M450	11/15 ⇨
MEGANE IV 1.8 RS 300	M5P404	09/18 ⇨
MEGANE IV 1.8 RS TCe 280	M5P402, M5P404	10/17 ⇨
ESPACE V 1.6 TCe 200	M5M450	02/15 ⇨
ESPACE V 1.8 TCe 225	5TZ175X15DYA, M5P403	10/16 ⇨
KADJAR 1.6 TCe 165	M5M460	11/16 ⇨
KOLEOS 2.0 TCe	M5R402	08/16 ⇨
LATITUDE 1.6 RS	M5M400	04/14 ⇨
TALISMAN 1.6 TCe 150	M5M450	11/15 ⇨
TALISMAN 1.6 TCe 200	M5M450	11/15 ⇨
TALISMAN 1.8 TCe 225	M5P403	09/18 ⇨

FACET 9.6452

05,5

COILS

Adatt./Suitable:

BOSCH
0 986 221 090

DACIA
22 43 327 34R

HITACHI
133901
2503901

INFINITI
22448-JA00C

MAGNETI MARELLI
060717203012

NISSAN
22448-1KT0A
22448-1KT1A
22448-3RC0A
22448-ED000
22448-JA00A
22448-JA00C

RENAULT
22 43 327 34R
22 43 392 77R
22 44 81K T0A
22 44 83R C0A
22 44 8JA 00C

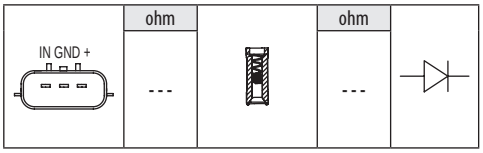

DACIA		
DUSTER 1.0 LPG	H4D450, H4D460	01/19 ⇨
DUSTER 1.0 TCe 100	H4D450, H4D460	01/19 ⇨
DUSTER 1.0 TCe 100 4x4	H4D450, H4D460	01/19 ⇨
DUSTER 1.0 TCe 90	H4D470	05/21 ⇨
LOGAN II MCV 1.0 LPG	H4D450, H4D460	11/19 ⇨
LOGAN II MCV 1.0 TCe 100	H4D450, H4D460	11/19 ⇨
SANDERO II 1.0 LPG	H4D450, H4D460	11/19 ⇨
SANDERO II 1.0 TCe 100	H4D450, H4D460	11/19 ⇨
SANDERO II 1.0 TCE 90 GPF	H4D470	01/21 ⇨
SANDERO 1.0 TCe 100	H4D480	01/21 ⇨
SANDERO 1.0 TCe 100 ECO-G	H4D480	01/21 ⇨
SANDERO 1.0 TCe 90	H4D470	01/21 ⇨
SANDERO 1.0 TCe 90 ECO-G	H4D470	01/21 ⇨
INFINITI		
FX 50 AWD	VK50VE	10/08 ⇨
M 56	VK56VD	03/10 ⇨
M 56 X	VK56VD	03/10 ⇨
Q70 5.6 AWD	VK56VD	01/15 ⇨
QX70 50 AWD	VK50VE	08/13 ⇨
NISSAN		
CUBE 1.6 16V	HR16DE	08/09 ⇨
FRONTIER 2.5 i	QR25DE	11/14 ⇨
JUKE I 1.5	HR15DE	10/13 ⇨
JUKE I 1.6	HR16DE	06/10 ⇨
JUKE I 1.6 CVTC	HR16DE	08/14 ⇨
JUKE I 1.6 LPG	HR16DE	01/12 ⇨
JUKE I CVTC	HR16DE	03/13 ⇨
MICRA IV 1.2	HR12DE	05/10 ⇨
MICRA IV 1.2 4WD	HR12DE	05/10 ⇨
MICRA IV 1.2 LPG	HR12DE	05/10 ⇨ 09/15
X-TRAIL III 2.5	QR25DE	12/13 ⇨
X-TRAIL III 2.5 ALL MODE 4x4-i	QR25DE	12/13 ⇨
MURANO III 2.5 HEV ALL MODE 4x4-i	QR25DER	01/16 ⇨
NAVARA III 2.5	QR25DE	07/14 ⇨
NAVARA III 2.5 DDTi	YD25DDTi	01/15 ⇨
NOTE II 1.2	HR12DE	06/13 ⇨
NOTE II 1.2 4WD	HR12DE	06/13 ⇨
NOTE II 1.2 LPG	HR12DE	03/15 ⇨
ALMERA III 1.2 i	HR12DE	09/11 ⇨
NP300 2.5 i	QR25DE	06/14 ⇨
NV200 / EVALIA 2.0	MR20DE	07/10 ⇨
QASHQAI / QASHQAI +2 2.0	MR20DE	03/13 ⇨ 04/14

NISSAN		
QASHQAI / QASHQAI +2 2.0 Trazione integrale	MR20DE	03/13 ⇨ 04/14
QASHQAI I 1.6 LPG	HR16DE	11/10 ⇨ 12/13
QASHQAI I 2.0	MR20DE	02/07 ⇨ 04/14
QASHQAI I 2.0 Trazione integrale	MR20DE	02/07 ⇨ 04/14
SENTRA VII 1.8	MRA8DE	08/12 ⇨
SENTRA VII 1.8 [TWN]	MRA8DE	08/13 ⇨
SENTRA VII 1.8 i	MRA8DE	07/12 ⇨
SYLPHY III 1.8	MRA8DE	08/12 ⇨
TEANA II 2.5 FOUR Trazione integrale	QR25DE	06/08 ⇨ 12/12
TEANA III 2.5	QR25DE	09/13 ⇨
TIIDA II 1.6 [RUS]	HR16DE	01/15 ⇨
TIIDA II 1.6 CVTC	HR16DE	08/12 ⇨
TIIDA II 1.8	MRA8DE	08/12 ⇨
PATHFINDER IV 2.5 Hybrid	QR25DER	10/13 ⇨
PATHFINDER IV 2.5 Hybrid 4WD	QR25DER	10/13 ⇨
X-TRAIL 2.5 ALL MODE 4x4-i	QR25DE	04/16 ⇨
X-TRAIL II 2.5	QR25DE	09/07 ⇨ 11/13
X-TRAIL II 2.5 4x4	QR25DE	06/07 ⇨ 07/14
RENAULT		
CAPTUR 1.0 TCe 90 ECO-G	H4D470	01/21 ⇨
CAPTUR LPG	H4D460	01/20 ⇨
CAPTUR TCe 100	H4D450	01/20 ⇨
CAPTUR TCe 90	H4D470	09/20 ⇨
CLIO V 1.0 LPG	H4D450, H4D452, H4D460	06/19 ⇨
CLIO V 1.0 TCe 100	H4D450, H4D452, H4D460	06/19 ⇨
CLIO V TCe 90	H4D450, H4D470	08/20 ⇨
FLUENCE 1.6	H4M729	01/13 ⇨
KOLEOS 2.5	2TR700, 2TR701, 2TR703, 2TR705, 2TR702	09/08 ⇨
KOLEOS 2.5 4x4	2TR700, 2TR701, 2TR703, 2TR705, 2TR702	09/08 ⇨
KOLEOS 2.5 Sce 4WD	2TR707	08/16 ⇨
TWINGO III 0.9 TCe 95	H4B453	03/19 ⇨

FACET 9.6456

05,5

COILS

Adatt./Suitable:

BOSCH
0 986 221 114

HYUNDAI
27300-3F100

KIA
27300-3F100

MAGNETI MARELLI
060717149012

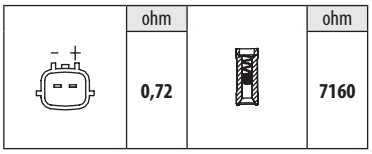

HYUNDAI		
AZERA [USA] 2.4	--	09/10 ⇨
EQUUS / CENTENNIAL II 4.6 V8	G8BA	03/09 ⇨
GENESIS 2.0	G4KF	01/13 ⇨
GENESIS 2.0 CVVT	G4KF	06/08 ⇨ 02/14
GENESIS 2.0 T	G4KF	01/08 ⇨ 12/14
GENESIS 2.0 TCi	--	01/11 ⇨
GRANDEUR 2.4	G4KE	07/11 ⇨
H-1 II 2.4	--, G4KC	02/08 ⇨
H-1 II 2.4 i	G4KC	02/08 ⇨
H1 2.4 CVVT	G4KC	01/10 ⇨
IX35 2.0	G4KD	01/10 ⇨
IX35 2.0 4WD	G4KD	01/10 ⇨
IX35 2.0 CVVT	G4KD	08/09 ⇨ 07/13
IX35 2.0 CVVT AWD	G4KD	08/09 ⇨ 07/13

HYUNDAI		
IX35 2.4 DCVVT-I 4WD	G4KE	07/10 ⇨ 12/13
IX35 2.4 GDi 4WD	G4KJ	01/13 ⇨
NF 2.0 CVVT	G4BPE	05/05 ⇨ 12/10
SANTA FE II 2.4	G4KE	11/10 ⇨ 12/12
SANTA FE II 2.4 4x4	G4KE	07/10 ⇨ 12/12
SANTA FE III 2.4	G4KJ	09/12 ⇨ 12/15
SANTA FE III 2.4 4WD	G4KJ	09/12 ⇨
SANTA FE III 2.4 CCVT	G4KE	09/12 ⇨
SANTA FE III 2.4 CCVT AWD	G4KE	09/12 ⇨
SANTA FE III 2.4 GDI 4WD	G4KJ	05/15 ⇨
SANTA FE IV 2.4 AWD	G4KE	07/18 ⇨
SANTA FE IV 2.4 GDI AWD	G4KJ	07/18 ⇨
SONATA V 2.0 GLSI	G4KD	07/08 ⇨ 12/10
SONATA V 2.0 VVTi GLS	G4KA, G4KD	05/05 ⇨ 12/10
SONATA V 2.4	G4KC, G4KE	01/05 ⇨ 12/10
SONATA VI 2.0	G4KD	06/09 ⇨ 06/14
SONATA VI 2.0 i	G4KD	01/11 ⇨ 06/14
SONATA VI 2.4	G4KC	06/09 ⇨ 12/15
KIA		
BORREGO 4.6	G8BA	09/08 ⇨ 12/11
CERATO II 1.6	G4FC	01/10 ⇨
CERATO II 2.0	G4KD	01/09 ⇨
CERATO II 2.0 CVVT	G4KD	01/09 ⇨
CERATO 2.0 CVVT	G4KD	07/09 ⇨ 02/14
MOHAVE 4.6	--	09/08 ⇨
OPTIMA III 2.0	--	03/10 ⇨
OPTIMA III 2.0 CVVL	G4KD	03/12 ⇨
OPTIMA III 2.0 CVVT	G4KD	01/11 ⇨ 12/15
OPTIMA III 2.4	--, G4KC, G4KE, G4KJ	03/10 ⇨
OPTIMA III 2.4 CVVT	G4KE, G4KJ	01/12 ⇨
OPTIMA III 2.4 Hybrid	G4KC	09/11 ⇨
OPTIMA IV 2.4 MPi	G4KE	09/15 ⇨
QUORIS 5.0 GDI	G8BE	05/15 ⇨
MAGENTIS II 2.0	G4KD	09/09 ⇨ 12/10
SORENTO II 2.4 CVVT	G4KE, G4KJ	11/09 ⇨ 12/15
SORENTO II 2.4 CVVT 4WD	G4KE, G4KJ	11/09 ⇨ 12/15
SORENTO II 2.4 GDI	G4KJ	10/12 ⇨ 12/15
SORENTO II 2.4 GDI 4WD	G4KJ	10/12 ⇨ 12/15
SORENTO II 2.4 LPG	G4KE	04/10 ⇨ 12/15
SORENTO II 2.4 LPG 4WD	G4KE	04/10 ⇨ 12/15
SORENTO II CVVT	G4KE	06/09 ⇨ 12/15
SORENTO II CVVT 4WD	G4KE	06/09 ⇨ 12/15
SPORTAGE III 2.0 CVVT	G4KD	06/10 ⇨
SPORTAGE III 2.0 CVVT AWD	G4KD, G4NC	06/10 ⇨
SPORTAGE III 2.4 i 4WD	G4KE	08/10 ⇨

FACET 9.6457

05,5

COILS

Adatt./Suitable:

BOSCH
0 986 221 001
0 986 22A 000

HITACHI
133860
2503860

NISSAN
22448-6N000
22448-6N002
22448-6N010
22448-6N011
22448-6N012
22448-6N015
22448-95F0A

[03] **Supplied until depletion**
- Fornibile fino ad esaurimento delle scorte
- Fourni jusqu'à épuisement du stock
- Lieferbar solange vorrat reicht
- Suministrado hasta el stock termina

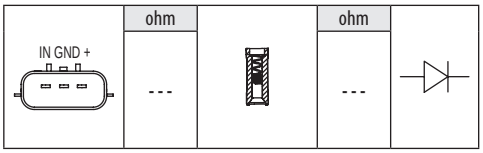

NISSAN		
ALMERA I 1.8	QG18DE	07/95 ⇨ 05/00
ALMERA II 1.5	QG15DE	03/00 ⇨
ALMERA II 1.5 XL	QG15DE	03/01 ⇨
ALMERA II 1.8	QG18DE	01/00 ⇨

NISSAN		
ALMERA III 1.5	QG15DE	01/06 ⇨
ALMERA III 1.6	QG16	01/06 ⇨
ALMERA III 1.6 16V	QG16, QG16DE	03/06 ⇨
ALMERA TINO 1.8	QG18DE	08/00 ⇨ 02/06
PRIMERA II 1.6 16V	QG16DE	06/96 ⇨ 07/02
PRIMERA II 1.6 16V LPG	QG16DE	09/00 ⇨ 07/02
PRIMERA II 1.8 16V	QG18DE	08/99 ⇨ 07/02
PRIMERA II 1.8 16V LPG	QG18DE	08/99 ⇨ 12/01
PRIMERA 1.6 LPG	QG16DE	09/96 ⇨ 07/02
PRIMERA 1.8 LPG	QG18DE	08/99 ⇨ 07/02
PRIMERA III 1.6	QG16DE	01/02 ⇨ 08/08
PRIMERA III 1.6 Visia	QG16DE	01/02 ⇨ 04/06
PRIMERA III 1.8	QG18DE	03/02 ⇨ 10/08
PRIMERA III 1.8 LPG	QG18DE	03/02 ⇨

FACET 9.6470

07,5

COILS

Adatt./Suitable:

BOSCH
0 986 22A 207

FIAT
71742420

HITACHI
2503947

MAGNETI MARELLI
060717159012

SUBARU
33400-62J00
33400-83E10

SUZUKI
33400-62J00
33400-62J00-000
33400-83E10
33400-83E10-000
33400M79F00
33400M79F00-000
33400M83E10
33400M83E10-000

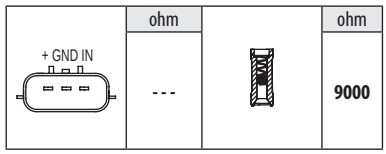

FIAT		
SEDICI 1.6 16V	M16A	06/06 ⇨ 10/14
SEDICI 1.6 16V 4x4	M16A	06/06 ⇨ 10/14
SUBARU		
JUSTY II 1.3 4x4	G13BB	04/01 ⇨ 11/03
JUSTY III 1.3 AWD	M13A	09/03 ⇨
JUSTY III 1.5 AWD	M15A	09/03 ⇨
SUZUKI		
ALTO VI 1.1	F10DN	09/04 ⇨ 12/08
SWIFT IV 1.3	M13A	02/05 ⇨
SWIFT IV 1.3 4x4	M13A	02/05 ⇨
SWIFT IV 1.3 LPG	M13A	09/08 ⇨ 12/10
SWIFT IV 1.5	M15A	02/05 ⇨
SWIFT IV 1.6	M16A	05/06 ⇨
IGNIS II 1.3	M13A	09/03 ⇨
IGNIS II 1.3 4x4	M13A	09/03 ⇨
IGNIS II 1.5	M15A	09/03 ⇨
IGNIS II 1.5 4x4	M15A	09/03 ⇨
WAGON R III 1.3	M13A	09/03 ⇨ 12/10
SX4 I 1.5	M15A	06/06 ⇨ 07/10
SX4 I 1.5 VVT	M15A	07/10 ⇨
SX4 I 1.5 VVT 4x4	M15A	07/10 ⇨
SX4 I 1.5 VVTi	M15A	07/07 ⇨ 12/15
SX4 I 1.6	M16A	06/06 ⇨
SX4 I 1.6 AWD	M16A	10/07 ⇨ 12/11
SX4 I 1.6 VVT	M16A	06/06 ⇨
SX4 I 1.6 VVT 4x4	M16A	06/06 ⇨
WAGON R+ II 1.3	G13BB, M13A	05/00 ⇨
WAGON R+ II 1.3 4WD	G13BB, M13A	10/01 ⇨

SUZUKI		
WAGON R II 1.3	G13BB	04/99 ⇨ 10/00

FACET 9.6479

05

COILS

Adatt./Suitable:

HITACHI
138856
2508856

HYUNDAI
27301-03000 *5
27301-03010 *5
27301-03015 *5
27301-03035 *5
27310-03010
27310-03020
27310-37110

KIA
27301-03010 *5
27301-03100 *5
27310-03010
27310-03020

[*5] **Supplied single coil only, without fastening clamp**
- Fornita bobina singola senza staffa
- Fourni seulement la bobine individuelle, sans étrier
- Nur Zündspule geliefert, ohne Befestigungsbügel
- Suministrada solamente la bobina individual, sin brida

9.6479

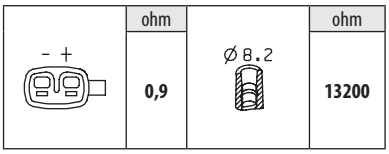

HYUNDAI		
I20 II 1.2	G4LA	11/14 ⇨
I20 II 1.2 LPGI	G4LA	11/14 ⇨
I20 II 1.2 MPI	G4LA	05/15 ⇨
I10 I 1.2	G4LA	11/08 ⇨
I10 I 1.2 LPG	G4LA	01/10 ⇨ 12/13
I10 II 1.2	G4LA	12/13 ⇨
I20 I 1.2	G4AG, G4LA	09/08 ⇨ 12/15
I20 I 1.2 LPG	G4LA	01/09 ⇨ 08/14
SANTA FE I 2.7 V6 4x4	G6BA, G6BA-G	02/01 ⇨ 03/06
KIA		
PICANTO II 1.2	G4LA	09/11 ⇨ 03/17
RIO III 1.2	G4LA	09/11 ⇨ 12/17
RIO III 1.2 CVVT	G4LA	11/14 ⇨ 12/17
RIO III 1.25 CVVT	G4LA	06/11 ⇨ 12/17
RIO III 1.25 LPG	G4LA	09/11 ⇨ 12/17

FACET 9.6480 — 05

COILS

Adatt./Suitable:

HYUNDAI
27310-02610
27310-37130

KIA
27310-02610

- +	ohm	Ø 8.2	ohm
	1,05		13200

9.6489

9.6480	9.6487	9.6489

HYUNDAI		
SANTA FE I 2.7 4x4	G6BA	09/02 ⇨ 12/04
SANTA FE I 2.7 V6 4x4	G6BA, G6BA-G	02/01 ⇨ 03/06
KIA		
PICANTO I 1.0	--, G4HE	04/04 ⇨
PICANTO I 1.0 LPG	G4HE	01/09 ⇨ 04/11
PICANTO I 1.1	--, G4HG	04/04 ⇨
PICANTO I 1.1 LPG	G4HG	01/09 ⇨ 04/11

FACET 9.6481 — 05

COILS

Adatt./Suitable:

BOSCH
0 986 221 080

DENSO
DIC-0113
DIC-0114

HYUNDAI
27301-23700 *5
27301-23710 *5
27301-23900 *5

KIA
27301-23700 *5
27301-23710 *5
27301-23720 *5
27301-23900 *5

MAGNETI MARELLI
060717155012
060717172012

*5 **Supplied single coil only, without fastening clamp**
- Fornita bobina singola senza staffa
- Fourni seulement la bobine individuelle, sans étrier
- Nur Zündspule geliefert, ohne Befestigungsbügel
- Suministrada solamente la bobina individual, sin brida

9.6481

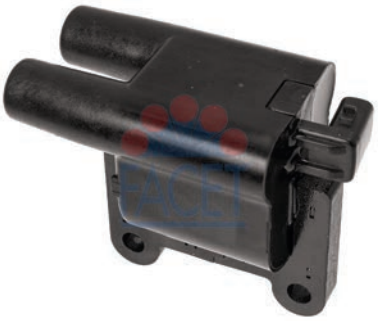

- +	ohm	Ø 8.2	ohm
	0,68		9200

HYUNDAI		
ELANTRA III 1.8	G4BB, G4GB	06/00 ⇨ 07/06
ELANTRA III 2.0	G4GC, G4GC-G	06/00 ⇨ 07/06
ELANTRA IV 2.0 CVVT	G4GC	06/06 ⇨ 06/11
I30 I 2.0	G4GC, G4GC-G	10/07 ⇨ 06/12
LANTRA 1.8	G4GB	06/00 ⇨
LANTRA 2.0	G4GC-G	06/00 ⇨
LAVITA 1.8	--	01/07 ⇨
MATRIX 1.8	G4GB, G4GB-G	06/01 ⇨ 08/10
MATRIX 1.8 [TUR]	G4GB	04/08 ⇨
SONATA V 2.0 i [RUS]	--	04/06 ⇨ 12/10
COUPE II 2.0	G4GC, G4GC-G	08/01 ⇨ 08/09
COUPE II 2.0 GLS	G4GC, G4GC-G	02/03 ⇨ 08/09
TRAJET 2.0	G4GC, G4GC-G, G4JP-G	03/00 ⇨ 07/08
TRAJET 2.0 CRDi	D4EA	08/05 ⇨ 07/08
TRAJET CVVT	G4GC	01/04 ⇨ 07/08
TUCSON 2.0	G4GC	08/04 ⇨
TUCSON 2.0 LPG	G4GC	06/04 ⇨ 03/10
TUCSON 2.0 LPG Trazione integrale	G4GC	06/09 ⇨ 03/10
TUCSON 2.0 Trazione integrale	G4GC	08/04 ⇨ 11/10
TUCSON CVVT	G4GC	06/04 ⇨ 03/10
KIA		
CARENS I 2.0 CVVT	G4GC	08/04 ⇨
CEED I 2.0	G4GC	12/06 ⇨ 12/12
CERATO I 2.0	G4GC	03/04 ⇨ 05/07
PRO CEE'D I 2.0	G4GC	02/08 ⇨ 09/12
PRO CEE'D I 2.0 LPG	G4GC	01/09 ⇨ 12/09
SPORTAGE II 2.0	G4KD	01/09 ⇨ 05/10
SPORTAGE II 2.0 16V 4WD	G4GC	09/04 ⇨
SPORTAGE II 2.0 i 16V	G4GC	09/04 ⇨
SPORTAGE II 2.0 LPG	G4GC	06/09 ⇨ 05/10
CERATO II 2.0 CVVT	--	01/09 ⇨

FACET 9.6482 — 05

COILS

Adatt./Suitable:

HYUNDAI
27310-22600

KIA
27310-22600

+ -	ohm	Ø 8.2	ohm
	1,05		13200

9.6485

9.6482	9.6483	9.6485

9.6486

9.6482	9.6484	9.6486

HYUNDAI		
ACCENT II 1.3	G4EH	08/02 ⇨ 11/05
ACCENT II 1.5	G4EK	09/99 ⇨ 10/02
ACCENT II 1.6	G4ED-G	12/02 ⇨ 11/05
ELANTRA III 1.6	G4ED-G, G4GA	06/00 ⇨ 07/06
GETZ 1.3	G4EA	09/03 ⇨ 06/09
GETZ 1.3 i	G4EA	09/02 ⇨ 03/04
GETZ 1.4 i	G4EE	08/05 ⇨ 12/10
GETZ 1.6	G4ED, G4ED-G	09/02 ⇨ 06/09
LAVITA 1.6	--	01/07 ⇨
MATRIX 1.6	G4ED, G4ED-G, G4ED-L	06/01 ⇨ 08/10
MATRIX 1.6 [TUR]	G4ED	04/08 ⇨
ACCENT III 1.4 GL	G4EE	11/05 ⇨ 11/10
COUPE II 1.6 16V	G4ED-G	03/02 ⇨ 08/09
VERNA I 1.3	G4EA	09/99 ⇨
VERNA I 1.5	G4EB, G4EC-G	09/99 ⇨
VERNA I 1.6	G4ED-G	12/02 ⇨
VERNA II 1.4 GL	--	11/05 ⇨
VERNA II 1.6 GLS	--	11/05 ⇨
KIA		
RIO II 1.4	G4EE	01/10 ⇨ 12/11
RIO II 1.4 16V	G4EE	03/05 ⇨ 12/11

FACET 9.6483 — 05

COILS

Adatt./Suitable:

HYUNDAI
27310-22610

[03] **Supplied until depletion**
- Fornibile fino ad esaurimento delle scorte
- Fourni jusqu'à épuisement du stock
- Lieferbar solange vorrat reicht
- Suministrado hasta el stock termina

	ohm	Ø 8.2	ohm
	1,05		13200

9.6485

9.6483	9.6485	9.6482

HYUNDAI		
ACCENT II 1.3	G4EA, G4EH	01/00 ⇨ 11/05
ACCENT II 1.5	G4EB, G4EK	01/00 ⇨ 12/06
GETZ 1.3	G4EA	09/03 ⇨ 06/09
GETZ 1.3 i	G4EA	09/02 ⇨ 03/04
VERNA I 1.3	G4EA	09/99 ⇨
VERNA I 1.5	G4EB	09/99 ⇨

FACET 9.6484 — 05

COILS

Adatt./Suitable:

HYUNDAI
27310-26600

KIA
27310-26600

	ohm	Ø 8.2	ohm
	1,05		13200

9.6486

9.6484	9.6486	9.6482

HYUNDAI		
ACCENT II 1.5	G4FK	09/99 ⇨ 10/02
ACCENT II 1.6	G4ED-G	12/02 ⇨ 11/05
ELANTRA III 1.6	G4ED-G, G4GA	06/00 ⇨ 07/06
GETZ 1.4 i	G4EE	08/05 ⇨ 12/10
GETZ 1.6	G4ED, G4ED-G	09/02 ⇨ 06/09
LAVITA 1.6	--	01/07 ⇨
MATRIX 1.6	G4ED-G, G4ED-L	06/01 ⇨ 08/10
MATRIX 1.6 [TUR]	G4ED	04/08 ⇨
ACCENT III 1.4 GL	G4EE	11/05 ⇨ 11/10
COUPE II 1.6 16V	G4ED-G	03/02 ⇨ 08/09
VERNA I 1.5	G4EC-G	09/99 ⇨
VERNA I 1.6	G4ED-G	12/02 ⇨
VERNA II 1.4 GL	--	11/05 ⇨
VERNA II 1.6 GLS	--	11/05 ⇨
KIA		
RIO II 1.4	G4EE	01/10 ⇨ 12/11
RIO II 1.4 16V	G4EE	03/05 ⇨ 12/11

FACET 9.6485 — 07

COILS

Adatt./Suitable:

CHEVROLET
96453420 *1

DAEWOO
96453420 *1

HYUNDAI
27301-22600 *1

[*1] **Without fastening clamp**
- Senza staffa di fissaggio
- sans bride de fixation
- ohne Befestigungsbügel
- sin estribo de sujeción

[245] **without fastening clamp**
- senza staffa fissaggio
- sans bride de fixation
- ohne Befestigungsbügel
- sin estribo de sujeción

9.6482	9.6483

CHEVROLET		
LACETTI 1.4	F14D3	03/05 ⇨
LACETTI 1.4 16V	L14(85CUL4)	03/05 ⇨ 03/13
LACETTI 1.4 LPG	L14(85CUL4)	01/05 ⇨ 12/12
LACETTI 1.6	LXT	03/05 ⇨
LACETTI 1.6 LPG	LXT	06/09 ⇨ 12/11
LACETTI 1.8	LDA	03/05 ⇨
NUBIRA 1.4	L14(85CUL4)	01/05 ⇨ 12/08
NUBIRA 1.6	L44(96CUL4), LXT	03/05 ⇨
NUBIRA 1.6 LPG	L44(96CUL4), LXT	03/05 ⇨ 12/10
NUBIRA 1.8	LDA	03/05 ⇨ 12/11
OPTRA 1.4 16V	F14D3	03/05 ⇨
OPTRA 1.6	F16D3, LXT	08/03 ⇨ 12/08
OPTRA 1.6 SRV	F16D3	06/06 ⇨
DAEWOO		
LACETTI 1.6	F16D3	02/04 ⇨
NUBIRA II 1.4	F14D3	10/03 ⇨ 12/04
NUBIRA II 1.6	F16D3	07/03 ⇨
HYUNDAI		
ACCENT II 1.3	G4EA, G4EH	01/00 ⇨ 11/05
ACCENT II 1.5	G4EB, G4EC-G, G4EK, G4FK	01/00 ⇨ 12/06
GETZ 1.3	G4EA	09/04 ⇨ 06/09
VERNA I 1.3	G4EA	09/99 ⇨
VERNA I 1.5	G4EB	09/99 ⇨

FACET 9.6486 — 07

COILS

Adatt./Suitable:

HYUNDAI
27301-26600 *1

KIA
27301-26600 *1

*1 **Without fastening clamp**
- Senza staffa di fissaggio
- sans bride de fixation
- ohne Befestigungsbügel
- sin estribo de sujeción

245 **without fastening clamp**
- senza staffa fissaggio
- sans bride de fixation
- ohne Befestigungsbügel
- sin estribo de sujeción

9.6482	9.6484

HYUNDAI		
ACCENT II 1.6	G4ED, G4ED-G	12/02 ⇨ 11/05
COUPE I 1.6 16V	G4GR	03/98 ⇨ 04/02
COUPE I 1.6 i 16V	4G61, G4GR	12/96 ⇨ 04/02
ELANTRA III 1.6	G4ED, G4ED-G, G4GA, G4GR	06/00 ⇨ 07/06
GETZ 1.6	G4ED-G	09/02 ⇨ 06/09
LAVITA 1.6	--	01/07 ⇨
MATRIX 1.6	G4ED-G, G4ED-L	06/01 ⇨ 08/10
MATRIX 1.6 [TUR]	G4ED	04/08 ⇨
COUPE II 1.6 16V	G4ED, G4ED-G	03/02 ⇨ 08/09
VERNA I 1.5	G4EC-G	09/99 ⇨
VERNA I 1.6	G4ED-G	12/02 ⇨
VERNA II 1.4 GL	--	11/05 ⇨
VERNA II 1.6 GLS	--	11/05 ⇨
KIA		
CERATO I 1.6	G4ED	04/04 ⇨ 12/09

FACET 9.6487 — 05

COILS

Adatt./Suitable:

HYUNDAI
27301-02100 *5
27310-02611
27310-02612
27310-37120

KIA
27310-02611

*5 **Supplied single coil only, without fastening clamp**
- Fornita bobina singola senza staffa
- Fourni seulement la bobine individuelle, sans étrier
- Nur Zündspule geliefert, ohne Befestigungsbügel
- Suministrada solamente la bobina individual, sin brida

9.6487

ohm		ohm
- +	Ø 8.2	
1,05		13200

9.6489		
9.6487	9.6489	9.6480

HYUNDAI		
GETZ 1.1	G4HD	09/02 ⇨ 06/09
SANTA FE I 2.7 4x4	G6BA	09/02 ⇨ 12/04
SANTA FE I 2.7 V6 4x4	G6BA, G6BA-G	02/01 ⇨ 03/06
KIA		
PICANTO I 1.0	--, G4HE	04/04 ⇨
PICANTO I 1.0 LPG	G4HE	01/09 ⇨ 04/11
PICANTO I 1.1	--, G4HG	04/04 ⇨
PICANTO I 1.1 LPG	G4HG	01/09 ⇨ 04/11

FACET 9.6489 — 07

COILS

Adatt./Suitable:

KIA
27301-02700 *1
27301-02710 *1

*1 **Without fastening clamp**
- Senza staffa di fissaggio
- sans bride de fixation
- ohne Befestigungsbügel
- sin estribo de sujeción

245 **without fastening clamp**
- senza staffa fissaggio
- sans bride de fixation
- ohne Befestigungsbügel
- sin estribo de sujeción

9.6480	9.6487

KIA		
PICANTO I 1.0	--, G4HE	04/04 ⇨
PICANTO I 1.1	--, G4HG	04/04 ⇨

FACET 9.6491 — 07,5

COILS

Adatt./Suitable:

HITACHI
133963
2503963

MAGNETI MARELLI
060717093012

SUZUKI
33410-66D00
33410-66D00-000
33410-66D01
33410-66D01-000
33410-66D10
33410-66D10-000

ohm		ohm
+ GND IN	---	
		9000

SUZUKI		
GRAND VITARA I 1.6 4x4	G16B	03/98 ⇨ 09/05
JIMNY III 1.3	M13A	08/04 ⇨
JIMNY III 1.3 16V	G13BB, M13A	02/01 ⇨
JIMNY III 1.3 16V 4WD	G13BB, M13A	09/98 ⇨
JIMNY III 1.3 16V 4x4	M13A	08/05 ⇨
JIMNY III 1.3 4x4	G13BB	09/98 ⇨ 08/00
SWIFT III 1.3 [USA]	--	06/95 ⇨ 05/01
VITARA I 1.6 16V	G16B	10/99 ⇨ 10/02
VITARA II 1.6i [USA]	--	08/99 ⇨ 12/06

FACET 9.6496 — 07

COILS

Adatt./Suitable:

BOSCH
0 986 221 001
0 986 221 060
0 986 221 060

DACIA
22 43 361 34R
60 01 543 604
77 00 274 008

HITACHI
133800
138764
138764

LADA
22 43 361 34R

MAGNETI MARELLI
060717035012
060717055012
060810070010

NISSAN
22448-00Q0E
22448-00QAC

RENAULT
22 43 361 34R
60 01 543 604
77 00 274 008
H77 00 873 701

SAGEM
2 526 151 A

- **NEW - ITEM NOW AVAILABLE FROM PRODUCTION**
- NUOVO - ARTICOLO ORA DISPONIBILE PER LA VENDITA
- NOUVEAU - ARTICLE DISPONIBLE EN PRODUCTION COURANTE
- NEU - JETZT ZUM VERKAUF VERFÜGBARER ARTIKEL
- NUEVO - ARTICULO AHORA DISPONIBLE EN PRODUCCION

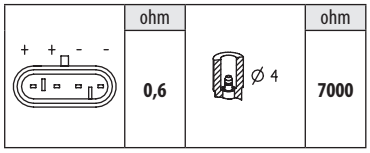

DACIA		
DOKKER 1.6	K7M812, K7M828	11/12 ⇨
DOKKER 1.6 LPG	K7M812, K7M828	11/13 ⇨
LODGY 1.6	K7M812, K7M828	03/12 ⇨
LODGY 1.6 LPG	K7M812, K7M828	11/13 ⇨
LOGAN I 1.4	K7J710	09/04 ⇨
LOGAN I 1.4 MPI LPG	K7J710, K7J714	02/06 ⇨ 12/12
LOGAN I 1.6	K7M710, K7M714	09/04 ⇨
LOGAN I 1.6 Bifuel	K7M710, K7M718, K7M800, K7M818	11/08 ⇨
LOGAN I 1.6 LPG	K7M718	08/04 ⇨ 12/12
LOGAN I 1.6 MPI 85	K7M800	05/10 ⇨
LOGAN II 1.6	K7M812	06/13 ⇨ 08/16
LOGAN II 1.6 16V	K7M764, K7M812	10/12 ⇨
LOGAN II MCV 1.6	K7M812	06/13 ⇨
SANDERO I 1.4	K7J710	06/08 ⇨
SANDERO I 1.4 MPI LPG	K7J714	01/09 ⇨
SANDERO I 1.6	K7M710, K7M718	06/08 ⇨
SANDERO I 1.6 Hi-Flex	K7M732	06/08 ⇨ 12/12
SANDERO I 1.6 LPG	K7M718, K7M818	06/08 ⇨ 12/12
SANDERO I 1.6 MPI 85	K7M800	05/10 ⇨ 06/13
SANDERO II 1.6	K7M812	11/12 ⇨
SANDERO II 1.6 I	K7M764	10/12 ⇨
SOLENZA 1.4	E7J262	02/03 ⇨ 10/05
LADA		
LARGUS 1.6	11189, K7M	03/12 ⇨
NISSAN		
KUBISTAR 1.2	D7F726, D7F744, D7F764, D7F726	08/03 ⇨
KUBISTAR 1.2 LPG	D7F764	10/03 ⇨ 08/05
KUBISTAR 1.4	K7J700, K7J701	08/03 ⇨ 10/09
KUBISTAR 1.6 16V	K4M752, K4M753	08/03 ⇨ 10/09
RENAULT		
CLIO II 1.0	D7D760	02/00 ⇨ 05/01
CLIO II 1.2	D7F710, D7F720, D7F722, D7F726, D7F744, D7F746, D7F764, D7F766	03/98 ⇨
CLIO II 1.2 LPG	D7F744, D7F764, D7F766	09/98 ⇨ 06/09
CLIO II 1.4	E7J634, E7J635, K7J700	09/98 ⇨
CLIO II 1.6	K7M746	09/98 ⇨
CLIO III 1.2	D4F784	11/07 ⇨ 12/11
CLIO III 1.2 16V	D4F784, D4F786	05/07 ⇨ 12/14
KANGOO II 1.6	K7M750	02/08 ⇨
CLIO 1.2 BiFuel	D7F722	03/98 ⇨ 10/01
DOKKER 1.6	K7M812	12/13 ⇨
KANGOO 1.2	D7F746	12/01 ⇨ 06/03
KANGOO 1.2 BiFuel	D7F710, D7F722, D7F744, D7F764, D7F766	06/97 ⇨ 06/03
KANGOO I 1.0	D7D700, D7D760	09/98 ⇨
KANGOO I 1.0 RN	D7D700, D7D760	01/02 ⇨ 01/07
KANGOO I 1.2	D7F710, D7F720, D7F722, D7F726, D7F744, D7F746, D7F764, D7F766	08/97 ⇨
KANGOO I 1.2 BiFuel	D7F710, D7F744	07/98 ⇨ 07/01
KANGOO I 1.4	E7J634, E7J635, K7J700, K7J701	08/97 ⇨
KANGOO I 1.6	K7M746	09/99 ⇨
LODGY 1.6	K7M812, K7M828	07/13 ⇨
LOGAN 1.4	K7J710	09/04 ⇨
LOGAN 1.4 LPG	K7J714	02/08 ⇨ 10/13
LOGAN 1.6	K7M710	09/04 ⇨
LOGAN 1.6 MPI 85	K7M800	05/10 ⇨
LOGAN EXPRESS 1.6	K7M710	04/07 ⇨
LOGAN/STEPWAY 1.6	K7M812	11/13 ⇨
MEGANE I 1.4	E7J626	09/96 ⇨ 08/03
MEGANE I 1.4 e	E7J626	01/96 ⇨ 08/03
MEGANE I 1.6	K7M704	02/00 ⇨ 09/00
MEGANE I 1.6 e	K7M702, K7M703, K7M790	01/96 ⇨ 08/03
MEGANE I 1.6 i	K7M720	01/96 ⇨ 03/99
MEGANE I 1.6 LPG	K7M702	08/95 ⇨ 03/99
MEGANE I 2.0 16V	F5R740	01/02 ⇨ 08/03
MEGANE I 2.0 16V IDE	F4R746, F5R740	11/99 ⇨ 08/03
MEGANE SCÉNIC I 1.6 e	K7M702, K7M703	10/96 ⇨ 10/99
MEGANE SCÉNIC I 1.6 i	K7M720	01/97 ⇨ 09/99
MEGANE 1.6 BiFuel	K7M702	10/96 ⇨ 10/99
MODUS / GRAND MODUS 1.2	D4F786	04/11 ⇨
MODUS / GRAND MODUS 1.2 16V	D4F784	05/07 ⇨
SANDERO I 1.4	K7J710	02/09 ⇨
SANDERO I 1.4 LPG	K7J714	02/09 ⇨
SANDERO I 1.6	K7M710	12/07 ⇨
SANDERO I 1.6 MPI 85	K7M800	05/10 ⇨
SANDERO II 1.6	K7M812	11/13 ⇨
THALIA I 1.4	K7J718	05/00 ⇨ 02/09
THALIA I 1.6	K7M730, K7M734	01/01 ⇨
THALIA II 1.4	K7J700	09/08 ⇨ 06/14
TWINGO I 1.0	D7D740	01/00 ⇨
TWINGO I 1.2	D7F700, D7F701, D7F702, D7F703, D7F704, D7F706	05/96 ⇨
TWINGO II 1.2	D7F800	03/07 ⇨ 09/14
TWINGO II 1.2 TCe 100	D4F780, D4F782	02/11 ⇨
TWINGO II 1.2 Turbo	D4F780, D4F782	03/07 ⇨ 09/14
WIND 1.2	D4F782	07/10 ⇨
WIND 1.2 TCe 100	D4F782	02/11 ⇨

FACET 9.6499 — 05,5

COILS

Adatt./Suitable:

AUDI
04C 905 110 D
04C 905 110 E
04C 905 110 H
04C 905 110 J
04C 905 110 L
04E 905 110 B
04E 905 110 D
04E 905 110 E
04E 905 110 K
04E 905 110 M
04E 905 110 P

BOSCH
0 986 221 057
0 986 221 072

CUPRA
04E 905 110 K
04E 905 110 P

HITACHI
2503894
2504033

MAGNETI MARELLI
060717199012

SEAT
04C 905 110 B
04C 905 110 D
04C 905 110 E
04C 905 110 H
04C 905 110 J
04C 905 110 L
04E 905 110
04E 905 110 A
04E 905 110 B
04E 905 110 E
04E 905 110 K
04E 905 110 P

SKODA
04C 905 110 A
04C 905 110 B
04C 905 110 D
04C 905 110 E
04C 905 110 H
04C 905 110 J
04C 905 110 L
04E 905 110
04E 905 110 A
04E 905 110 B
04E 905 110 E
04E 905 110 K
04E 905 110 M
04E 905 110 P

VW
04C 905 110 A
04C 905 110 B
04C 905 110 D
04C 905 110 E
04C 905 110 H
04C 905 110 J
04C 905 110 L
04E 905 110
04E 905 110 A
04E 905 110 B
04E 905 110 E
04E 905 110 H
04E 905 110 K
04E 905 110 L
04E 905 110 P

- **NEW - ITEM NOW AVAILABLE FROM PRODUCTION**
- NUOVO - ARTICOLO ORA DISPONIBILE PER LA VENDITA
- NOUVEAU - ARTICLE DISPONIBLE EN PRODUCTION COURANTE
- NEU - JETZT ZUM VERKAUF VERFÜGBARER ARTIKEL
- NUEVO - ARTICULO AHORA DISPONIBLE EN PRODUCCION

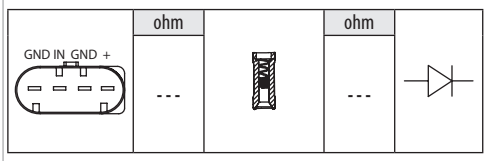

AUDI		
A1 1.0 TFSI	CHZB, CHZE, DKLD	03/15 ⇨ 10/18
A1 1.4 TFSI	CPTA, CZCA, CZDD	04/12 ⇨ 10/18
A1 1.4 TSI	CZEA	11/14 ⇨ 10/18
A1 25 TFSI	DKLA, DLAC	11/18 ⇨
A1 30 TFSI	DKJA, DKRF, DLAA	07/18 ⇨
A3 III 1.0 TFSI	CHZD, DKRF	07/16 ⇨ 10/20
A3 III 1.2 TFSI	CJZA, CYVB	02/13 ⇨
A3 III 1.4 TFSI	CMBA, CPTA, CXSA, CXSB, CZCA, CZCC	04/12 ⇨
A3 III 1.4 TFSI e-tron	CUKB, CXUA, DGEA	05/14 ⇨ 10/20
A3 III 1.4 TFSI g-tron	CPWA	11/13 ⇨ 10/20
A3 III 1.4 TSI	CZEA	05/14 ⇨ 10/20
A3 III 30 TFSI	CHZD, DKRF	07/18 ⇨ 10/20
A3 IV 30 TFSI	DLAA	06/20 ⇨
A3 IV 30 TFSI Mild Hybrid	DLAA	06/20 ⇨

AUDI		
A3 IV 40 TFSIe	DGEA	06/20 ⇨
A3 IV 45 TFSIe	DGEA	07/21 ⇨
A4 V 1.4 TFSI	CVNA	08/15 ⇨ 11/19
A5 II 1.4 TFSI	CVNA	11/16 ⇨ 02/20
Q2 1.0 TFSI	CHZJ, DKRF	10/16 ⇨ 10/20
Q2 1.4 TFSI	CZEA	06/16 ⇨ 08/18
Q2 30 TFSI	CHZJ, DKRF, DLAA	07/18 ⇨
Q3 1.4 TFSI	CZDB	07/16 ⇨ 10/18
Q3 1.4 TSI	CHPB, CZDA, CZEA	10/13 ⇨ 10/18
CUPRA		
FORMENTOR 1.4 e-Hybrid	DGEA	01/21 ⇨
FORMENTOR VZ 1.4 e-Hybrid	DGEA	02/21 ⇨
LEON 1.4 e-HYBRID	DGEA	09/20 ⇨
LEON VZ 1.4 e-HYBRID	DGEA	09/20 ⇨
SEAT		
ALHAMBRA III 1.4 TSI	CZDA, DJKA	05/15 ⇨
ALHAMBRA III TSi	CZDA	05/15 ⇨
ARONA 1.0 TGi	DBYA	11/18 ⇨
ARONA 1.0 TSI	CHZJ, CHZL, DKJA, DKLA, DKRF, DLAA	07/17 ⇨
ARONA 1.6 SRE	CWVA	07/17 ⇨
ATECA 1.0 TSI	CHZJ, DKRF	05/16 ⇨
ATECA 1.4 TSI	CZEA	06/16 ⇨
ATECA 1.4 TSI 4Drive	CZEA	06/16 ⇨
IBIZA IV 1.0	CHYB	05/15 ⇨ 06/17
IBIZA IV 1.0 TSI	CHZB, CHZC	05/15 ⇨ 06/17
IBIZA IV 1.2 TSI	CJZC, CJZD	05/15 ⇨ 06/17
IBIZA IV 1.4 TSI	CPTA, CZEA	10/13 ⇨ 06/17
IBIZA IV 1.6	CWVA	07/15 ⇨ 06/17
IBIZA IV 1.6 SRE	CWVA, CWVB	07/15 ⇨
IBIZA IV 1.8 TSI Cupra	DAJA	11/15 ⇨ 12/16
IBIZA V 1.0	CHYB, CHYC	01/17 ⇨
IBIZA V 1.0 TGI	DBYA	11/17 ⇨
IBIZA V 1.0 TSI	CHZJ, CHZL, DKJA, DKLA, DKRF, DLAA, DLAC	01/17 ⇨
IBIZA V 1.6	CWVA	05/17 ⇨
IBIZA 1.0 SRE	CHYB	05/15 ⇨ 12/16
IBIZA 1.6 SRE	CWVA	07/15 ⇨ 12/16
LEON III 1.0 TSI	CHZD, DKLB	05/15 ⇨
LEON III 1.2 TSI	CJZA, CJZB, CYVA, CYVB	12/12 ⇨
LEON III 1.4 TGI	CPWA	02/13 ⇨
LEON III 1.4 TSI	CHPA, CMBA, CXSA, CZCA, CZDA, CZEA	09/12 ⇨
LEON III 1.6 TSI	CWVA	05/15 ⇨
LEON IV 1.0 TSI	DLAA, DLAB	03/20 ⇨
LEON IV 1.0 TSI Mild Hybrid	DLAA	08/20 ⇨
LEON IV 1.4 TSI e-Hybrid	DGEA	05/20 ⇨
MII 1.0	CHYA, CHYB	10/11 ⇨ 07/19
MII 1.0 EcoFuel	CPGA	10/12 ⇨ 07/19
TARRACO 1.4 e-HYBRID	DGEA	02/21 ⇨
TARRACO 1.4 TSI Plug in Hybrid	DGEA	02/21 ⇨
TOLEDO IV 1.0 TSI	CHZB, CHZC, DKLD, DKRC	05/17 ⇨ 04/19
TOLEDO IV 1.2 TSI	CJZC, CJZD	05/15 ⇨ 05/17
TOLEDO IV 1.4 TSI	CZCA	05/15 ⇨ 04/19
TOLEDO IV 1.6	CWVA	05/15 ⇨ 04/19
SKODA		
CITIGO 1.0	CHYA, CHYB	10/11 ⇨ 08/19
CITIGO 1.0 CNG	CPGA	11/12 ⇨ 08/19
FABIA 1.0 TSI	DLAA, DLAC	06/21 ⇨
KAMIQ 1.0 TGI CNG	DBYA	11/19 ⇨
KAMIQ 1.0 TSI	DKJA, DKLA, DKRF	07/19 ⇨
KAMIQ 1.6 SRE	CWVA	07/19 ⇨
KAROQ 1.0 TSI	CHZJ, DKRF	07/17 ⇨
KAROQ 1.4 TSI	CZEA, DJKA	07/17 ⇨
KODIAQ 1.4 TSI	CZCA, CZDA, CZEA	10/16 ⇨
KODIAQ 1.4 TSI 4x4	CZDA, CZEA	10/16 ⇨
OCTAVIA III 1.0 TSI	CHZD, DKRA, DKRF	05/16 ⇨
OCTAVIA III 1.2 TSI	CJZA, CJZB, CYVA, CYVB	11/12 ⇨
OCTAVIA III 1.4 TSI	CHPA, CHPB, CZDA	11/12 ⇨
OCTAVIA III 1.4 TSI G-TEC	CPWA	11/13 ⇨
OCTAVIA III 1.6	CWVA	01/14 ⇨
OCTAVIA IV 1.0 TSI	DLAA	06/20 ⇨
OCTAVIA IV 1.0 TSI e-TEC	DLAA	06/20 ⇨
RAPID 1.0 TSI	CHZB, CHZC, DKLD	06/17 ⇨ 12/19
RAPID 1.2 TSI	CJZC, CJZD	05/15 ⇨ 12/19
RAPID 1.4 TSI	CZCA	05/15 ⇨
RAPID 1.6	CWVA	05/15 ⇨
RAPID 1.6 SRE	CWVA	05/15 ⇨
SCALA 1.0 TGI CNG	DBYA	11/19 ⇨
SCALA 1.0 TSI	DKJA, DKLA, DKRF, DLAA, DLAC	02/19 ⇨
SCALA 1.6 SRE	CWVA	02/19 ⇨
FABIA III 1.0	CHYA, CHYB, CHYE	08/14 ⇨
FABIA III 1.0 TSI	CHZB, CHZC, DKLD, DKRC	08/14 ⇨
FABIA III 1.2 TSI	CJZC, CJZD	08/14 ⇨
FABIA III 1.4 TSI R5	CZCA	02/18 ⇨
FABIA III 1.6	CWVA, CWVB	01/15 ⇨
SUPERB III 1.4 TSI	CZCA, CZDA, CZEA	03/15 ⇨

SKODA		
SUPERB III 1.4 TSI 4x4	CZDA, CZEA	03/15 ⇨
SUPERB III 1.4 TSI iV	DGEB	08/19 ⇨
YETI 1.2 TSI	CYVB	05/15 ⇨ 12/17
YETI 1.4 TSI	CZCA	05/15 ⇨ 12/17
YETI 1.4 TSI 4x4	CZDA	05/15 ⇨ 12/17
YETI 1.6	CWVA	04/14 ⇨ 12/17
VW		
ARTEON 1.4 eHybrid	DGEB	11/20 ⇨
BEETLE 1.2 TSI 16V	CYVD	12/14 ⇨ 07/19
BEETLE 1.4 TSI	CZDA	12/14 ⇨ 07/19
CADDY III 1.0 TSI	CHZG, DKRD, DKRE	11/15 ⇨
CADDY III 1.2 TSI	CYVC	06/15 ⇨
CADDY III 1.4 TGI CNG	CPWA	06/15 ⇨
CADDY III 1.4 TSI	CZCB, DJKD	05/15 ⇨
CADDY III 1.6	CWVA	11/15 ⇨ 09/20
CADDY III 1.6 SRE	CWVA	11/15 ⇨ 09/20
POLO VI 1.0	CHYB, CHYC, DFNB	06/17 ⇨ 08/21
POLO VI 1.0 TGI	DBYA	09/17 ⇨
POLO VI 1.0 TSI	CHZJ, CHZL, DKJA, DKLA, DKRF, DLAA, DLAC	06/17 ⇨
CADDY IV 1.6 SRE	DWYA	02/21 ⇨
CC 1.4 TSI	CZDA	05/15 ⇨ 12/16
T-CROSS 1.0 TSI	CHZL, DKJA, DKLA, DKRF, DLAA, DLAC	12/18 ⇨
GOLF VI 1.2 TSI 16V	CJZA, CYVD	11/13 ⇨ 05/16
GOLF VI 1.4 TSI	CZCA, CZDA	11/13 ⇨ 05/16
GOLF VII 1.0 TSI	CHZC, CHZD, CHZK, DKLB, DKRF	05/15 ⇨
GOLF VII 1.2 TSI	CJZA, CJZB, CYVA, CYVB	08/12 ⇨
GOLF VII 1.2 TSi BlueMotion	CJZA, CJZB, CYVA	08/12 ⇨
GOLF VII 1.4 GTE Hybrid	CUKB, DGEA	05/14 ⇨
GOLF VII 1.4 TGI CNG	CPWA, CZBA	06/13 ⇨
GOLF VII 1.4 TSI	CHPA, CHPB, CMBA, CPTA, CPVA, CPVB, CXSA, CZCA, CZDA, CZDD, CZEA	08/12 ⇨
GOLF VII 1.4 TSi BlueMotion	CHPA, CXSA	08/12 ⇨
GOLF VII 1.4 TSI MultiFuel	CPVA, CPVB	04/13 ⇨
GOLF VII 1.6	CWVA	05/14 ⇨
PASSAT VI 1.4 GTE Hybrid	CUKC, DGEB	06/15 ⇨
PASSAT VI 1.4 TSI	CZCA, CZDA, CZEA	11/14 ⇨
PASSAT VI 1.4 TSI 4motion	CZEA	02/15 ⇨
GOLF VIII 1.0 eTSI	DLAA	06/20 ⇨
GOLF VIII 1.0 TSI	DLAA, DLAB	02/20 ⇨
GOLF VIII 1.4 GTE Plug-in Hybrid	DGEA	07/20 ⇨
GOLF VIII 1.4 TSI eHybrid	DGEA	07/20 ⇨
JETTA VI 1.2 TSI	CYVD	02/11 ⇨
JETTA VI 1.2 TSI 16V	CYVD	08/14 ⇨ 12/17
JETTA VI 1.4 TSI	CZCA, CZDA, CZTA	08/14 ⇨
JETTA VI 1.4 TSI Hybrid	CNLA	04/11 ⇨
JETTA VI 1.6	CWVA	09/15 ⇨
JETTA VI 1.6 [RUS]	CWVA, CWVB	01/15 ⇨
JETTA VI 1.6 MPi	CWVB	09/15 ⇨ 04/18
MULTIVAN 1.4 e-Hybrid	DGEA	08/21 ⇨
POLO V 1.0	CHYA, CHYB	01/14 ⇨
POLO V 1.0 TSI	CHZB, CHZC	11/14 ⇨
POLO V 1.2 TSI	CJZC, CJZD	01/14 ⇨
POLO V 1.2 TSI 16V	CJZC	02/14 ⇨ 10/17
POLO V 1.4 TSI	CPTA, CZCA, CZEA	10/12 ⇨
POLO V 1.4 TSI [RUS]	CZCA	05/14 ⇨
POLO V 1.6	CWVA, CWVB	07/14 ⇨
T-ROC 1.0 TSI	CHZJ, DKRF, DLAA	07/17 ⇨
SCIROCCO III 1.4 TSI	CZCA, CZDA, CZDC	11/13 ⇨
SHARAN II 1.4 TSI	CZDA, DJKA	05/15 ⇨
TAIGO 1.0 TSI	DLAA, DLAC	09/21 ⇨
TAOS 1.4 TSI	DJKA	10/20 ⇨
TAOS 1.4 TSI 4motion	DJKA	05/21 ⇨
TAOS 1.6 MPI	DWYA	07/21 ⇨
TIGUAN I 1.4 TSI	CZDA, CZDB	05/15 ⇨ 07/18
TIGUAN II 1.4 TSI	CZCA, CZDA, CZDB, CZEA, DJVA	01/16 ⇨
TIGUAN II 1.4 TSI 4motion	CZDA, CZEA	05/16 ⇨ 07/18
TOURAN II 1.0 TSI	DKRB	12/18 ⇨
TOURAN II 1.2 TSI	CYVB	05/15 ⇨
TOURAN II 1.4 TSI	CZDA	05/15 ⇨
UP 1.0	--, CHYA, CHYB, CHYE, DAFA	08/11 ⇨
UP 1.0 EcoFuel	CPGA	11/12 ⇨
UP 1.0 GTI	DKRA	11/17 ⇨
UP 1.0 TSI	CHZA, DKLC	05/16 ⇨ 09/18

FACET 9.6502

05,5

COILS

Adatt./Suitable:

HITACHI
133909
2503909

MAGNETI MARELLI
060717164012
060810160010

NISSAN
22448-AX001

- **NEW - ITEM NOW AVAILABLE FROM PRODUCTION**
- NUOVO - ARTICOLO ORA DISPONIBILE PER LA VENDITA
- NOUVEAU - ARTICLE DISPONIBLE EN PRODUCTION COURANTE
- NEU - JETZT ZUM VERKAUF VERFÜGBARER ARTIKEL
- NUEVO - ARTICULO AHORA DISPONIBLE EN PRODUCCION

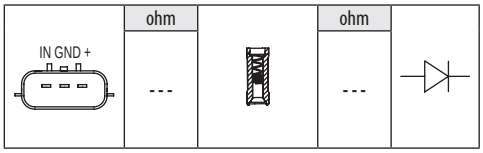

NISSAN		
MICRA III 1.0 16V	CG10DE	01/03 ⇨ 06/10
MICRA III 1.2	CR12DE	10/03 ⇨ 06/10
MICRA III 1.2 16V	CG12DE, CR12DE	01/03 ⇨ 06/10
MICRA III 1.2 LPG	CG12DELPG, CR12DE	10/02 ⇨ 06/10
MICRA III 1.3	CGA3DE	08/04 ⇨
MICRA III 1.4 16V	CR14DE	01/03 ⇨ 06/10
MICRA C+C 1.4 16V	CR14DE	08/05 ⇨
NOTE I 1.4	CR14DE	03/06 ⇨ 06/12
NOTE I 1.4 LPG	CR14DE	01/06 ⇨ 08/13

FACET 9.6503

05,5

COILS

Adatt./Suitable:

HITACHI
134003
2504003
CM11-116

HONDA
30520-RB0-003
30520-RB0-013
30520-RB0-S01

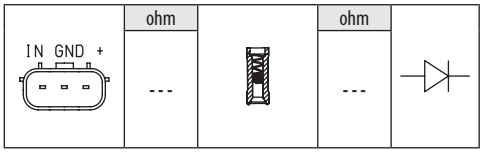

HONDA		
CITY 1.4 i-V TEC	L13Z1	09/08 ⇨
CITY 1.5 i-VTEC	L15-A7	08/09 ⇨
CIVIC VIII 1.4	L13Z1	10/08 ⇨
CIVIC IX 1.4 i-VTEC	L13Z4	02/12 ⇨
CR-Z 1.5 IMA	LEA1, LEA3	06/10 ⇨
JAZZ III 1.2	L12B1, L12B2	07/08 ⇨
JAZZ III 1.3 i	L13Z1, L13Z2	07/08 ⇨

HONDA		
JAZZ III 1.4	L13Z1	11/08 ⇨
JAZZ III 1.5 i-VTEC	L15-A7	07/08 ⇨ 06/14

FACET 9.6507

05,5

COILS

Adatt./Suitable:

BMW
12 13 7 559 842
12 13 7 571 644
12 13 7 582 627
12 13 7 594 935
12 13 7 638 477
7 559 842
7 594 935
7 638 477

BOSCH
0 221 504 471
0 221 504 472
0 221 504 801

HITACHI
133876
2503876

MAGNETI MARELLI
060717113012

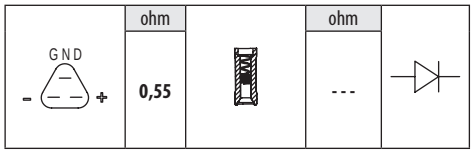

BMW		
1 I 116 i	N43B16A, N43B16AA, N43B20A	03/07 ⇨ 12/11
1 I 118 d	M47D20(204D4)	06/04 ⇨ 02/07
1 I 118 i	N43B20A	09/06 ⇨ 12/13
1 I 120 i	N43B20A, N46B20BD	03/07 ⇨ 12/13
3 V 316 i	N43B16A, N43B16AA	09/07 ⇨ 06/13
3 V 318 i	N43B20A	05/07 ⇨ 12/13
3 V 320 i	N43B20A	09/05 ⇨ 12/13
3 V 325 i	N53B30A	10/06 ⇨ 12/13
3 V 325 i xDrive	N53B30A	09/08 ⇨ 12/13
3 V 325 xi	N53B30A	09/07 ⇨ 08/08
3 V 330 i	N52B30A, N52B30BF, N53B30A	09/06 ⇨ 10/13
3 V 330 i xDrive	N53B30A	09/07 ⇨ 06/13
3 V 330 xi	N53B30A	09/06 ⇨ 06/12
5 VI 523 i	N53B30A	06/09 ⇨ 08/11
5 VI 528 i	N53B30A	11/09 ⇨ 08/11
5 VI 530 i	N53B30A	05/11 ⇨ 06/13
6 II 630 i	N53B30A	09/07 ⇨ 08/10
5 V 520 i	N43B20A	12/06 ⇨ 12/10
5 V 523 i	N53B25A	01/07 ⇨ 12/10
5 V 525 i	N53B30A	01/07 ⇨ 12/10
5 V 525 i xDrive	N53B30A	09/08 ⇨ 12/10
5 V 525 xi	N53B30A	01/07 ⇨ 12/10
5 V 530 i	N53B30A	09/06 ⇨ 12/10
5 V 530 i xDrive	N53B30A	09/08 ⇨ 05/10
5 V 530 xi	N53B30A	09/06 ⇨ 05/10

FACET 9.6508

05,5

COILS

Adatt./Suitable:

BOSCH
0 986 JG1 224

HITACHI
133930
2503930
CM11-108
CM11-111

HONDA
30521-PWA-003
30521-PWA-013
30521-PWA-S01
30521-REA-Z01

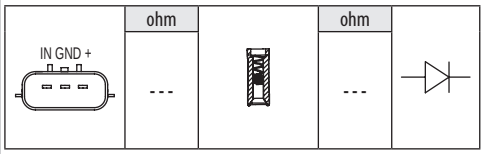

HONDA		
JAZZ II 1.2	L12A4	01/06 ⇨
JAZZ II 1.4	L13A6	01/06 ⇨
CITY 1.2	L12A2	05/03 ⇨
CITY 1.3	L13A3	10/05 ⇨ 07/08
CITY 1.5 i i-DSI	L15A2	11/02 ⇨
CIVIC VII 1.3 IMA	LDA1	10/03 ⇨ 09/05
JAZZ I 1.2 i-DSI	L12A1, L12A3, L12A4	03/02 ⇨ 07/08
JAZZ I 1.3 iDSi	L13A1, L13A6	03/02 ⇨ 07/08
JAZZ I 1.4	L13A5	04/05 ⇨ 07/08
JAZZ I 1.4 iDSI	L13A1, L13A6	12/06 ⇨ 10/08
CIVIC VIII 1.3 IMA	LDA2	01/06 ⇨
CIVIC VIII 1.4	L13A7	09/05 ⇨

FACET 9.6509

05,5

COILS

Adatt./Suitable:

BOSCH
0 986 221 101

CITROËN
96 712 145 80

DS
96 712 145 80

GENERAL MOTORS
3 639 500

HITACHI
134051
2504051

MAGNETI MARELLI
060717188012

OPEL
3639500
9671214580

PEUGEOT
96 712 145 80

TOYOTA
SU001-01125

VAUXHALL
3639500
9671214580

- **NEW - ITEM NOW AVAILABLE FROM PRODUCTION**
- NUOVO - ARTICOLO ORA DISPONIBILE PER LA VENDITA
- NOUVEAU - ARTICLE DISPONIBLE EN PRODUCTION COURANTE
- NEU - JETZT ZUM VERKAUF VERFÜGBARER ARTIKEL
- NUEVO - ARTICULO AHORA DISPONIBLE EN PRODUCCION

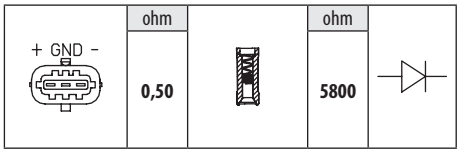

CITROËN		
C1 II 1.2 VTi 82	177L, HMT(EB2D), HMZ(EB2F)	04/14 ⇨
C3 III 1.2 PureTech 82	HMR(EB2FA)	05/18 ⇨
C3 III 1.2 PureTech 82 LPG	HMR(EB2FA)	05/18 ⇨
C3 III 1.2 VTi 68	HMM(EB2FAD), HMP(EB2FB)	07/16 ⇨
C3 III 1.2 VTi 82	HMZ(EB2F)	07/16 ⇨
C3 III 1.2 VTi 82 LPG	HMZ(EB2F)	07/16 ⇨
C3 III PureTech 82	HMR(EB2FA)	03/19 ⇨
C3 AIRCROSS 1.2 PureTech 82	HMR(EB2FA), HMZ(EB2F)	06/17 ⇨
C3 AIRCROSS PureTech 82	HMZ(EB2F)	05/19 ⇨
C3 II 1.0 VTi 68	ZMZ(EB0)	08/12 ⇨
C3 II 1.2 VTi 82	177L, HMZ(EB2F)	06/12 ⇨ 09/16
C4 CACTUS 1.2 VTi 75 / PureTech 75	HMU(EB2D), HMU(EB2FD)	09/14 ⇨
C4 CACTUS 1.2 VTi 82	HMZ(EB2F)	09/14 ⇨
C4 CACTUS PureTech 82	177L	05/19 ⇨
C-ELYSEE 1.2 PureTech 82	HMR(EB2FA)	02/18 ⇨
C-ELYSEE 1.2 VTi 72	HMY(EB2M)	11/12 ⇨
C-ELYSEE 1.2 VTi 82	177L, EB2F, HMZ(EB2F)	12/14 ⇨
DS3 1.2 VTi 82	177L, HMZ(EB2F)	01/13 ⇨ 07/15
DS		
DS3 1.2 VTi 82	HMZ(EB2), HMZ(EB2F)	04/15 ⇨ 07/19
OPEL		
CORSA F 1.2	F12XEL(EB2FAD)	07/19 ⇨
CROSSLAND X 1.2	F12XE(EB2FA)	07/19 ⇨
PEUGEOT		
108 1.2	HMT(EB2D), HMZ(EB2), HMZ(EB2F)	05/14 ⇨
108 1.2 VTi	HMZ(EB2)	05/14 ⇨
108 108 1.2	HMZ(EB2F)	05/14 ⇨
208 I 1.0	ZMZ(EB0)	03/12 ⇨
208 I 1.2 GPL	HMZ(EB2F)	06/15 ⇨
208 I 1.2 PureTech 82	HMR(EB2FA), HMZ(EB2F)	03/18 ⇨
208 I 1.2 VTi	HMZ(EB2)	09/13 ⇨
208 I 1.2 VTI 68 / PureTech 68	HMM(EB2FAD), HMP(EB2FB)	06/15 ⇨
208 I 1.2 VTI 82	HMZ(EB2), HMZ(EB2F)	03/12 ⇨
208 I 1.2 VTI 82 / PureTech 82	HMR(EB2FA), HMZ(EB2), HMZ(EB2F)	06/15 ⇨
208 II 1.2 PureTech 75	HMH(EB2FAD)	06/19 ⇨
301 1.2	HMZ(EB2F)	11/12 ⇨
301 1.2 PureTech 82	HMR(EB2FA)	02/18 ⇨
301 1.2 VTi 72	HMY(EB2M)	11/12 ⇨
301 1.2 VTi 82	HMZ(EB2F)	12/14 ⇨
308 II 1.2 VTi 72	HMZ(EB2), HMZ(EB2F)	09/13 ⇨

PEUGEOT		
2008 I 1.2 PureTech 82	HMR(EB2FA)	01/18 ⇨ 12/19
2008 I 1.2 VTi	HMZ(EB2), HMZ(EB2F)	03/13 ⇨
TOYOTA		
AYGO II 1.2	1PP	05/14 ⇨
VAUXHALL		
CORSA 1.2	F12XEL(EB2FAD)	07/19 ⇨
CROSSLAND X 1.2	B12XE(EB2F), D12XE(EB2FA), F12XE(EB2FA)	03/17 ⇨

FACET 9.6511 — 05,5

COILS

Adatt./Suitable:

BOSCH
0 986 221 078
DENSO
DIC-0207
HITACHI
134080
2504080
HYUNDAI
27301-2B100
KIA
27301-2B100
MAGNETI MARELLI
060717193012

- **ITEM NOW AVAILABLE FROM PRODUCTION**
  - ARTICOLO ORA DISPONIBILE PER LA VENDITA
  - ARTICLE DISPONIBLE EN PRODUCTION COURANTE
  - JETZT ZUM VERKAUF VERFÜGBARER ARTIKEL
  - ARTICULO AHORA DISPONIBLE EN PRODUCCION

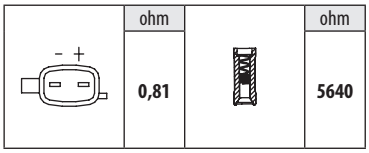

HYUNDAI		
I30 II 1.6	G4FC, G4FD, G4FG	12/11 ⇨ 12/16
I30 II 1.6 GDI	G4FD	12/11 ⇨
I40 1.6 GDI	G4FD	07/11 ⇨
IX35 1.6	G4FD	11/10 ⇨
IX35 GDi	G4FD	05/15 ⇨ 12/15
TUCSON 1.6 GDi	G4FD	06/15 ⇨ 09/20
VELOSTER 1.6 GDI	G4FD	03/11 ⇨ 12/17
KIA		
CARENS III 1.6 GDi	G4FD	03/13 ⇨
CEED II 1.6 GDi	G4FD	05/12 ⇨ 07/18
PRO CEE'D II 1.6 GDI	G4FD	03/13 ⇨ 07/18
PRO CEE'D 1.6 GDI	G4FD	04/15 ⇨ 07/18
SOUL I 1.6 Flex	--	01/11 ⇨
SOUL I 1.6 GDI	G4FD	06/11 ⇨ 12/14
SOUL II 1.6 GDI	G4FD	02/14 ⇨
SPORTAGE III 1.6 GDI	G4FD	02/11 ⇨
SPORTAGE III 1.6 LPG	G4FD	01/14 ⇨ 12/15
SPORTAGE IV 1.6 GDI	G4FD	09/15 ⇨
SPORTAGE IV 1.6 LPG	G4FD	07/20 ⇨

FACET 9.6512 — 05,5

COILS

Adatt./Suitable:

BOSCH
0 986 221 076
HITACHI
134079
2504079
HYUNDAI
27301-03110
KIA
27301-03110
MAGNETI MARELLI
060717187012

- **ITEM NOW AVAILABLE FROM PRODUCTION**
  - ARTICOLO ORA DISPONIBILE PER LA VENDITA
  - ARTICLE DISPONIBLE EN PRODUCTION COURANTE
  - JETZT ZUM VERKAUF VERFÜGBARER ARTIKEL
  - ARTICULO AHORA DISPONIBLE EN PRODUCCION

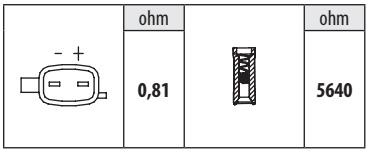

HYUNDAI		
I20 II 1.2	G4LA	11/14 ⇨
I20 II 1.2 LPG	G4LA	01/19 ⇨
I20 II 1.2 LPGI	G4LA	11/14 ⇨
I20 II 1.2 MPI	G4LA	05/15 ⇨
I20 I 1.2	G4LA	03/12 ⇨ 12/15
KIA		
PICANTO II 1.2	G4LA	09/11 ⇨ 03/17
PICANTO III 1.2	G4LA	03/17 ⇨
RIO III 1.2 CVVT	G4LA	11/14 ⇨ 12/17
RIO III 1.25 CVVT	G4LA	06/11 ⇨ 12/17
RIO III 1.25 LPG	G4LA	09/11 ⇨ 12/17
RIO IV 1.25	G4LA	01/17 ⇨
STONIC 1.2 CVVT	G4LA	07/17 ⇨

FACET 9.6513 — 05,5

COILS

Adatt./Suitable:

BOSCH
0 986 221 079
DACIA
22 43 324 28R
HITACHI
134058
2504058
LADA
22 43 324 28R
MAGNETI MARELLI
060810258010
MERCEDES-BENZ
A 281 906 00 00
NISSAN
22448-00Q0F
RENAULT
22 43 324 28R
H82 01 154 128
SMART
A 281 906 00 00

- **NEW - ITEM NOW AVAILABLE FROM PRODUCTION**
  - NUOVO - ARTICOLO ORA DISPONIBILE PER LA VENDITA
  - NOUVEAU - ARTICLE DISPONIBLE EN PRODUCTION COURANTE
  - NEU - JETZT ZUM VERKAUF VERFÜGBARER ARTIKEL
  - NUEVO - ARTICULO AHORA DISPONIBLE EN PRODUCCION

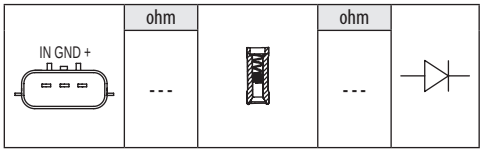

DACIA		
DOKKER 1.2 TCe	H5F402, H5F408	11/12 ⇨
DOKKER 1.2 TCe 115	--, H5F402, H5F408	12/12 ⇨
DOKKER 1.6	H4M738, H4M740	11/12 ⇨
DOKKER 1.6 LPG	H4M740	04/15 ⇨
DUSTER 1.2 TCe 125	H5F404, H5F408	01/12 ⇨
DUSTER 1.2 TCe 125 4x4	H5F404	10/13 ⇨
DUSTER 1.6 SCe 115	H4M438, H4M738	06/15 ⇨
DUSTER 1.6 SCe 115 4x4	H4M430, H4M730, H4M738	06/15 ⇨
DUSTER 1.6 SCe 115 LPG	H4M740	06/15 ⇨
LODGY 1.2 TCe	H5F402, H5F408	03/12 ⇨
LODGY 1.6	H4M738	03/12 ⇨
LODGY 1.6 LPG	H4M740	04/15 ⇨
LODGY 1.6 SCe 100	H4M738, H4M740	06/15 ⇨
LOGAN II TCe 90	H4B400, H4B408, H4B410	10/12 ⇨
LOGAN II TCe 90 LPG	H4B410	09/15 ⇨
LOGAN II MCV TCe 90	H4B400, H4B408	02/13 ⇨
LOGAN II MCV TCe 90 LPG	H4B410	09/15 ⇨
SANDERO II TCe 90	--, H4B400, H4B408	10/12 ⇨
SANDERO II TCe 90 LPG	H4B410	09/15 ⇨
LADA		
VESTA 1.6	H4M	11/19 ⇨
MERCEDES-BENZ		
CITAN 112	M200.711	06/13 ⇨ 08/21
NISSAN		
JUKE I 1.2 DIG-T	HR12DDT, HRA2DDT	05/14 ⇨
MICRA V 0.9 IG-T	HR09DET	12/16 ⇨
MICRA V 0.9 LPG	HR09DET	03/19 ⇨
PULSAR 1.2 DIG-T	HRA2DDT	10/14 ⇨
TERRANO III 1.6	H4M	12/15 ⇨
TERRANO III 1.6 4x4	H4M	12/15 ⇨
QASHQAI II 1.2 DIG-T	HR12DDT, HRA2DDT	11/13 ⇨
RENAULT		
MEGANE IV 1.2 TCe 100	H5F408	11/15 ⇨
MEGANE IV 1.2 TCe 130	H5F408	11/15 ⇨
MEGANE IV 1.6 16V	H4M738, H4M750	11/15 ⇨
MEGANE IV 1.6 SCe	H4M738, H4M750	10/16 ⇨
CAPTUR 0.9 TCe 90	H4B400, H4B408	06/13 ⇨
CAPTUR 1.2 T	H5F403	06/13 ⇨
CAPTUR 1.2 TCe	H5F408	02/18 ⇨
CAPTUR 1.2 TCe 120	H5F403, H5F408, H5F412	06/13 ⇨
MEGANE III 1.2 TCe	H5F400, H5F404, H5F405, H5F408, H5F412	03/12 ⇨
KANGOO II 1.2 TCe 115	H5F400, H5F408, H5F412	07/13 ⇨
CLIO IV 0.9 TCe 75	H4B408	05/18 ⇨

RENAULT		
CLIO IV 0.9 TCe 90	H4B400, H4B408	11/12 ⇨
CLIO IV 0.9 TCe 90 LPG	H4B410	08/15 ⇨
CLIO IV 1.2 TCe 120	H5F403, H5F408, H5F412	03/13 ⇨
DUSTER 1.6 16V	H4M438	06/15 ⇨
DUSTER 1.6 16V 4x4	H4M430	06/15 ⇨
GRAND SCÉNIC III 1.2 TCe	H5F400, H5F404, H5F408	04/12 ⇨
GRAND SCÉNIC IV 1.2 TCe 115	H5F408	09/16 ⇨
GRAND SCÉNIC IV 1.2 TCe 130	H5F408	09/16 ⇨
KADJAR 1.2 TCe 130	H5F408	06/15 ⇨
KAPTUR 1.6	H4M429, H4M438	03/16 ⇨
LOGAN/STEPWAY 1.6	H4M429, H4M438	09/16 ⇨
SANDERO II 1.6	H4M429, H4M438	09/16 ⇨
SANDERO II TCe 90	H4B400, H4B408, H4B410, H4B411	09/15 ⇨
SCÉNIC III 1.2 TCe	H5F400, H5F404, H5F408	04/12 ⇨
SCÉNIC IV 1.2 TCe 115	H5F408	09/16 ⇨
SCÉNIC IV 1.2 TCe 130	H5F408	09/16 ⇨
TWINGO III 0.9 TCe 110	H4B401	11/16 ⇨
TWINGO III 0.9 TCe 90	H4B401	09/14 ⇨
TWINGO III 0.9 TCe 90 LPG	H4B451	08/18 ⇨
TWINGO III 1.0 SCe 70	H4D400	09/14 ⇨
MEGANE CC 1.2 TCe	H5F400, H5F404	09/12 ⇨
SMART		
FORFOUR III 0.9	M281.910	11/14 ⇨
FORFOUR III 0.9 Brabus	M281.910	07/16 ⇨
FORFOUR III 1.0	M281.920	07/14 ⇨
FORTWO III 0.9	M281.910	09/14 ⇨
FORTWO III 0.9 Brabus	M281.910	07/16 ⇨
FORTWO III 1.0	M281.920	07/14 ⇨

FACET 9.6514

05,5

COILS

Adatt./Suitable:

BOSCH
0 986 221 075
DENSO
DIC-0209
HITACHI
134081
2504081
HYUNDAI
27301-04000
KIA
27301-04000

- **ITEM NOW AVAILABLE FROM PRODUCTION**
  - ARTICOLO ORA DISPONIBILE PER LA VENDITA
  - ARTICLE DISPONIBLE EN PRODUCTION COURANTE
  - JETZT ZUM VERKAUF VERFÜGBARER ARTIKEL
  - ARTICULO AHORA DISPONIBLE EN PRODUCCION

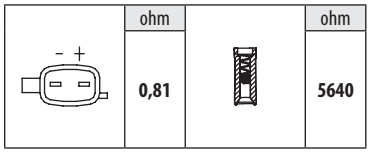

HYUNDAI		
I10 I 1.0	G3LA	01/11 ⇨ 12/17
I10 II 1.0	G3LA	08/13 ⇨
I10 II 1.0 LPG	B3LA	02/14 ⇨
KIA		
PICANTO II 1.0	G3LA	05/11 ⇨ 03/17
PICANTO II 1.0 Bi-Fuel	B3LA	05/11 ⇨ 10/14
PICANTO II 1.0 LPG	B3LA	08/13 ⇨ 03/17

FACET 9.6519

05,5

COILS

Adatt./Suitable:

FORD
1 760 593
1 776 803
1 827 901
CM5G-12A366-BA
CM5G-12A366-CA
CM5G-12A366-CB
FORD USA
CM5G-12A366-BA
HITACHI
134085
2504085
MAGNETI MARELLI
060717173012

- **NEW - ITEM NOW AVAILABLE FROM PRODUCTION**
  - NUOVO - ARTICOLO ORA DISPONIBILE PER LA VENDITA
  - NOUVEAU - ARTICLE DISPONIBLE EN PRODUCTION COURANTE
  - NEU - JETZT ZUM VERKAUF VERFÜGBARER ARTIKEL
  - NUEVO - ARTICULO AHORA DISPONIBLE EN PRODUCCION

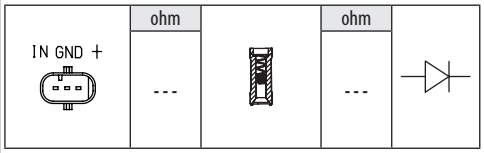

FORD		
B-MAX 1.0 EcoBoost	M1JA, M1JE, M1JH, SFJA, SFJB, SFJC, SFJD, YYJC	08/12 ⇨
C-MAX II 1.0 EcoBoost	--, M1DA, M1DD, M2DA, M2DC, SFDA	10/12 ⇨
ECOSPORT 1.0 EcoBoost	M1JC, M1JJ, M1JU, SFJL, YYJD, YYJF	10/13 ⇨
FIESTA VI 1.0	P4JA, P4JB, P4JC, P4JD, XMJA, XMJB, XMJC, XMJD	10/12 ⇨
FIESTA VI 1.0 EcoBoost	M1JE, M1JH, SFJA, SFJB, SFJC, SFJD, YYJA, YYJB	09/12 ⇨
FIESTA VI 1.0 Sport	YYJA, YYJB	05/14 ⇨ 04/17
FIESTA VII 1.0 EcoBoost	M1JL, M1JM, M1JP, Q0JA, Q0JB, Q0JC, Q0JD, SFJE, SFJF, SFJH, SFJJ, SFJK, SFJN, SFJP, YYJE, YYJG	05/17 ⇨
FIESTA VII 1.0 EcoBoost Active	M1JL, M1JM, M1JP, SFJE, SFJF, SFJH, SFJJ, SFJK, SFJN, SFJP, YYJE, YYJG	04/18 ⇨
FIESTA VII 1.0 EcoBoost mHEV	BZJA	07/20 ⇨
FIESTA VII 1.0 EcoBoost mHEV Active	BZJA	01/21 ⇨
FOCUS III 1.0 EcoBoost	M1DA, M1DC, M1DD, M1DH, M2DA, M2DB, M2DC, SFDA, SFDB	02/12 ⇨
GRAND C-MAX 1.0 EcoBoost	M1DA, M1DD, M2DA, M2DC, SFDA	10/12 ⇨ 06/19
MONDEO IV 1.0 EcoBoost	M1CA, M1CB	02/15 ⇨
TOURNEO COURIER 1.0 EcoBoost	SFCA, SFCB, SFCC, SFCD, SFCE, SFCF	02/14 ⇨
TOURNEO CUSTOM 1.0 EcoBoost PHEV	M1FA	04/20 ⇨
TRANSIT CONNECT II 1.0 EcoBoost	M2GA, M2GB	02/13 ⇨
TRANSIT COURIER 1.0 EcoBoost	SFCA, SFCB, SFCC, SFCD, SFCE, SFCF	02/14 ⇨
TRANSIT CUSTOM 1.0 EcoBoost PHEV	M1FA	04/20 ⇨

FACET 9.6520

05,5

COILS

Adatt./Suitable:

BOSCH
0 986 221 102
CITROËN
96 753 909 80
DS
96 753 909 80
GENERAL MOTORS
3 639 845
HITACHI
133962
2503962
OPEL
3639845
9675390980
PEUGEOT
96 753 909 80
VAUXHALL
3639845
9675390980

- **NEW - ITEM NOW AVAILABLE FROM PRODUCTION**
  - NUOVO - ARTICOLO ORA DISPONIBILE PER LA VENDITA
  - NOUVEAU - ARTICLE DISPONIBLE EN PRODUCTION COURANTE
  - NEU - JETZT ZUM VERKAUF VERFÜGBARER ARTIKEL
  - NUEVO - ARTICULO AHORA DISPONIBLE EN PRODUCCION

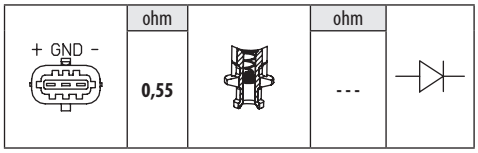

CITROËN		
C4 PICASSO II 1.2 THP 130	HNY(EB2DTS)	04/14 ⇨
C3 III PureTech 110	HNZ(EB2DT)	03/19 ⇨
C3 AIRCROSS PureTech 82	HNZ(EB2DT)	05/19 ⇨
C3 PICASSO 1.2 THP 110	HNZ(EB2DT)	01/15 ⇨
C3 II 1.2 THP 110	HNZ(EB2DT)	10/14 ⇨
C4 II 1.2 THP 110	8D4HH, HNZ(EB2DT)	02/15 ⇨ 12/17
C4 II 1.2 THP 130	HNY(EB2DTS)	04/14 ⇨
C4 III 1.2 PureTech 110	HNX(EB2DTSD)	04/18 ⇨
C4 III PureTech 130	HNY(EB2DTS)	05/19 ⇨
C4 CACTUS PureTech 130	HNY(EB2DTS)	05/19 ⇨
BERLINGO II 1.2 PureTech 110	--, EB2DT, HNZ(EB2DT)	02/16 ⇨
C4 GRAND PICASSO II 1.2 THP 130	HNY(EB2DTS)	04/14 ⇨
DS3 1.2 THP 110	HNZ(EB2DT)	10/14 ⇨ 07/15
DS4 1.2 THP 130	HNY(EB2DTS)	07/14 ⇨ 07/15
GRAND C4 SPACETOURER PureTech 130	HNY(EB2DTS)	05/19 ⇨
DS		
DS3 1.2 THP 110 / PureTech 110	HNP(EB2ADT), HNZ(EB2DT)	04/15 ⇨ 07/19
DS3 1.2 THP 130	HNY(EB2DTS)	09/15 ⇨ 07/19
DS4 / DS4 CROSSBACK 1.2 THP 130	HNY(EB2DTS)	07/15 ⇨ 12/18
OPEL		
GRANDLAND / GRANDLAND X 1.2	B12XHT(EB2DTS)	06/17 ⇨
PEUGEOT		
308 II 1.2 THP 130	HNY(EB2DTS)	03/14 ⇨ 06/21
2008 I 1.2 THP 130 / PureTech 130	HNS(EB2ADTS), HNY(EB2DTS)	01/15 ⇨
2008 I PureTech 130	HNS(EB2ADTS), HNY(EB2DTS)	01/18 ⇨
3008 I 1.2	HNY(EB2DTS)	01/15 ⇨ 08/16
3008 II 1.2 THP/ PureTech 130	HNS(EB2ADTS), HNY(EB2DTS)	05/16 ⇨
3008 II PureTech 130	HNY(EB2DTS)	05/16 ⇨
5008 I 1.2	HNY(EB2DTS)	01/15 ⇨ 03/17
PARTNER II 1.2 THP	HNZ(EB2DT)	02/16 ⇨
PARTNER II TEPEE 1.2 THP	HNV(EB2DTM), HNZ(EB2DT)	02/16 ⇨
VAUXHALL		
CROSSLAND X 1.2	B12XHL(EB2DT), B12XHT(EB2DTS)	03/17 ⇨
GRANDLAND X 1.2 Turbo	B12XHT(EB2DTS)	06/17 ⇨

FACET 9.6521 — 05,5

COILS

Adatt./Suitable:

SUZUKI
33400-60R00
33400-60R00-000
33400-78P00
33400-78P00-000
33400-81P00
33400-81P00-000
33400M68P10
33400M68P10-000

NEW - ITEM NOW AVAILABLE FROM PRODUCTION
- NUOVO - ARTICOLO ORA DISPONIBILE PER LA VENDITA
- NOUVEAU - ARTICLE DISPONIBLE EN PRODUCTION COURANTE
- NEU - JETZT ZUM VERKAUF VERFÜGBARER ARTIKEL
- NUEVO - ARTICULO AHORA DISPONIBLE EN PRODUCCION

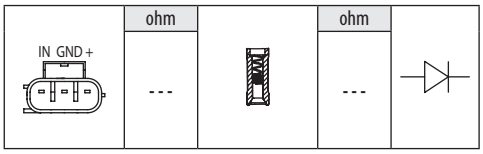

SUZUKI		
BALENO 1.0	K10CT	02/16 ⇨
BALENO 1.2	K12C	02/16 ⇨
BALENO 1.2 Hybrid	K12C	02/16 ⇨
IGNIS III 1.2	K12C	10/16 ⇨
IGNIS III 1.2 AllGrip	K12C	10/16 ⇨
IGNIS III 1.2 Hybrid	K12C	10/16 ⇨
IGNIS III 1.2 Hybrid AllGrip	K12C	10/16 ⇨
SWIFT V 1.2	K12B	08/12 ⇨
SWIFT V 1.2 4WD	K12B	08/12 ⇨
SWIFT VI 1.0	K10C	04/17 ⇨
SWIFT VI 1.0 SHVS	K10C	04/17 ⇨
SWIFT VI 1.2	K12C	04/17 ⇨
SWIFT VI 1.2 AllGrip	K12C	04/17 ⇨
SWIFT VI 1.2 SHVS	K12C	04/17 ⇨
SWIFT VI 1.2 SHVS AllGrip	K12C	04/17 ⇨
SWIFT VI 1.4 Sport	K14C	09/17 ⇨
SX4 II 1.0	K10C	08/16 ⇨
SX4 II 1.0 AllGrip	K10C	08/16 ⇨
SX4 II 1.4 T	K14C	08/16 ⇨
SX4 II 1.4 T AllGrip	K14C	08/16 ⇨
VITARA IV 1.0	K10C	10/18 ⇨
VITARA IV 1.0 AllGrip	K10C	10/18 ⇨
VITARA IV 1.4 T	K14C	09/15 ⇨
VITARA IV 1.4 T AllGrip	K14C	09/15 ⇨

FACET 9.6522 — 05,5

COILS

Adatt./Suitable:

HYUNDAI
27301-03200

KIA
27301-03200

NEW - ITEM NOW AVAILABLE FROM PRODUCTION
- NUOVO - ARTICOLO ORA DISPONIBILE PER LA VENDITA
- NOUVEAU - ARTICLE DISPONIBLE EN PRODUCTION COURANTE
- NEU - JETZT ZUM VERKAUF VERFÜGBARER ARTIKEL
- NUEVO - ARTICULO AHORA DISPONIBLE EN PRODUCCION

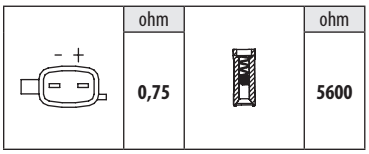

HYUNDAI		
ACCENT V 1.4	G4LC	07/18 ⇨
BAYON 1.4 MPI	G4LC	05/21 ⇨
ACCENT IV 1.4	G4LC	11/10 ⇨
ACCENT IV 1.4 CVT	--	11/10 ⇨
I20 II 1.4	G4LC	11/14 ⇨
I20 II 1.4 MPi	G4LC	05/15 ⇨
I30 II 1.4	G4LC	12/14 ⇨
I30 II 1.4 MPI	G4LC	05/15 ⇨
I30 III 1.4 MPI	G4LC	11/16 ⇨
SOLARIS 1.4	G4LC	01/17 ⇨
KIA		
CEED II 1.4 MPI	G4LC	04/15 ⇨ 07/18
CEED III 1.4	G4LC	03/18 ⇨
CEED III 1.4 LPG	G4LC	12/18 ⇨
PRO CEE'D II 1.4 MPI	G4LC	07/13 ⇨ 07/18
RIO IV 1.4	G4LC	01/17 ⇨
STONIC 1.4 CVVT	G4LC	07/17 ⇨
STONIC 1.4 LPG	G4LC	11/18 ⇨

FACET 9.6523 — 05,5

COILS

Adatt./Suitable:

FORD
1 800 554
1 836 729
DS7G-12A366-BA
DS7G-12A366-BB

HITACHI
133956

NEW - ITEM NOW AVAILABLE FROM PRODUCTION
- NUOVO - ARTICOLO ORA DISPONIBILE PER LA VENDITA
- NOUVEAU - ARTICLE DISPONIBLE EN PRODUCTION COURANTE
- NEU - JETZT ZUM VERKAUF VERFÜGBARER ARTIKEL
- NUEVO - ARTICULO AHORA DISPONIBLE EN PRODUCCION

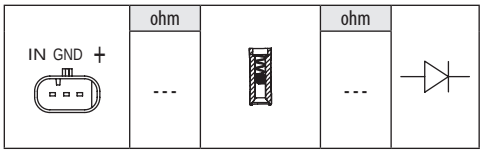

FORD		
C-MAX II 1.5 16V	--	03/15 ⇨
C-MAX II 1.5 EcoBoost	M8DB, M8DF, M9DB	03/15 ⇨ 06/19
FOCUS III 1.5 EcoBoost	M8DA, M8DB, M8DD, M8DE, M9DA, M9DB	09/14 ⇨
GALAXY III 1.5 EcoBoost	C15HDTX, UNCJ, UNCK	01/15 ⇨
GRAND C-MAX 1.5 EcoBoost	M8DB, M8DF, M9DB	03/15 ⇨ 06/19
KUGA II 1.5 16V	--	03/13 ⇨
KUGA II 1.5 EcoBoost	BNMA, M8MA, M8MB, M8MC, M8MD, M8ME	09/14 ⇨
KUGA II 1.5 EcoBoost 4x4	0CEAA, 285ZV604, 37F3P674K, 65M4R730, M8MA, M8MB, M8MD, M9MA, M9MC, M9ME	09/14 ⇨
MONDEO IV 1.5 EcoBoost	UNCA, UNCB, UNCE, UNCF, UNCN	09/14 ⇨
MONDEO IV 1.5 GTDI	--	09/14 ⇨
S-MAX II 1.5 EcoBoost	6CF4G15, C15HDTX, UNCI, UNCJ, UNCK	01/15 ⇨

FACET 9.6526

07,5

COILS

Adatt./Suitable:

INFINITI
22448-2V70A
22448-HG00A
22448-HG00B
22448-HG00C
22448-HG00E

MERCEDES-BENZ
A 274 906 06 00
A 274 906 07 00
A 274 906 14 00

- **NEW - ITEM NOW AVAILABLE FROM PRODUCTION**
- NUOVO - ARTICOLO ORA DISPONIBILE PER LA VENDITA
- NOUVEAU - ARTICLE DISPONIBLE EN PRODUCTION COURANTE
- NEU - JETZT ZUM VERKAUF VERFÜGBARER ARTIKEL
- NUEVO - ARTICULO AHORA DISPONIBLE EN PRODUCCION

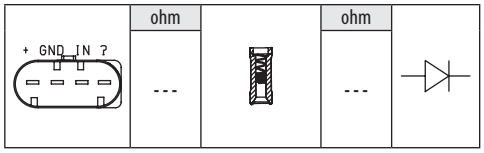

INFINITI		
Q30 2.0 T	270920	11/15 ⇨
Q30 2.0 T AWD	270920	11/15 ⇨
Q50 2.0 T	M274	04/14 ⇨
Q60 2.0 T	M274	09/16 ⇨
QX30 2.0 AWD	270920	09/16 ⇨
MERCEDES-BENZ		
CLASSE CLS II CLS 250	M274.920	05/14 ⇨
CLASSE B II B 160	M270.910	07/15 ⇨ 12/18
CLASSE B II B 180	M270.910	11/11 ⇨ 12/18
CLASSE B II B 200	M270.910	11/11 ⇨ 12/18
CLASSE B II B 200 Natural Gas Drive / B 200 c	M270.920, M270920NGT	11/12 ⇨ 12/17
CLASSE B II B 220 4-matic	M270.920	05/13 ⇨ 12/18
CLASSE B II B 250	M270.920	05/12 ⇨ 12/18
CLASSE B II B 250 4-matic	M270.920	08/14 ⇨ 12/18
CLASSE C III C 180	M274.910	02/12 ⇨
CLASSE C III C 180 CGI	M274.910	01/08 ⇨ 01/14
CLASSE C IV C 160	M274.910	04/15 ⇨
CLASSE C IV C 180	M274.910	03/14 ⇨
CLASSE C IV C 200	M274.920	12/13 ⇨ 08/18
CLASSE C IV C 200 4-matic	M274.920	04/15 ⇨ 08/18
CLASSE C IV C 250	M274.920	03/14 ⇨ 05/18
CLASSE C IV C 300	M274.920	09/15 ⇨ 12/18
CLASSE C IV C 300 4-matic	M274.920	12/13 ⇨ 08/18
CLASSE C IV C 300 e	M274.920	07/19 ⇨
CLASSE C IV C 300 e 4-matic	M274.920	07/19 ⇨
CLASSE C IV C 350 e	M274.920	02/15 ⇨ 08/18
CLASSE CLA AMG CLA 45 4-matic	M133.980	07/15 ⇨ 03/19
CLASSE CLA CLA 180	M270.910	01/13 ⇨ 03/19
CLASSE CLA CLA 200	M270.910	01/13 ⇨ 03/19
CLASSE CLA CLA 220 4-matic	M270.910, M270.920	01/15 ⇨
CLASSE CLA CLA 250	M270.920	01/13 ⇨ 03/19
CLASSE CLA CLA 250 4-matic	M270.920	07/13 ⇨ 03/19
CLASSE CLA CLA 45 AMG 4-matic	M133.980	07/13 ⇨ 03/19
CLASSE E IV E 180	M274.910	12/12 ⇨
CLASSE E IV E 200	M274.920	11/12 ⇨ 12/16
CLASSE E IV E 200 NGT	M274.920, M274920NGT	07/13 ⇨ 12/15
CLASSE E IV E 250	M274.920	11/12 ⇨ 12/16
CLASSE E V E 180	M274.910	01/17 ⇨
CLASSE E V E 200	M274.920	01/16 ⇨
CLASSE E V E 200 4-matic	M274.920	07/16 ⇨
CLASSE E V E 250	M274.920	07/16 ⇨
CLASSE E V E 300	M274.920	07/16 ⇨
CLASSE E V E 300 e	M274.920	11/18 ⇨
CLASSE E V E 300 e 4-matic	M274.920	07/20 ⇨
CLASSE E V E 350 e	M274.920	07/16 ⇨
CLASSE GLA AMG GLA 45 4-matic	M133.980	07/15 ⇨
CLASSE GLA GLA 180	M270.910	02/15 ⇨
CLASSE GLA GLA 200	M270.910	12/13 ⇨
CLASSE GLA GLA 220 4-matic	M270.920	01/17 ⇨

MERCEDES-BENZ		
CLASSE GLA GLA 250	M270.920	12/13 ⇨
CLASSE GLA GLA 250 4-matic	M270.920	12/13 ⇨
CLASSE GLA GLA 250 Flex	M270.920	01/15 ⇨
CLASSE GLA GLA 45 AMG 4-matic	M133.980	05/14 ⇨
CLASSE GLC 250 4-matic	M274.920	06/15 ⇨ 04/19
CLASSE GLC 300 4-matic	M274.920	07/15 ⇨ 04/19
CLASSE GLC 300 e 4-matic	M274.920	11/19 ⇨
CLASSE GLC 350 e 4-matic	M274.920	01/16 ⇨ 04/19
CLASSE GLK 200	M274.920	08/13 ⇨ 06/15
CLASSE GLK 250	M274.920	08/13 ⇨ 06/15
CLASSE GLK 250 4-matic	M274.920	08/13 ⇨ 06/15
CLASSE SLC 180	M274.910	01/16 ⇨
CLASSE SLC 200	M274.920	01/16 ⇨
CLASSE SLC 300	M274.920	01/16 ⇨
CLASSE SLK III 200	M274.920	04/15 ⇨
CLASSE SLK III 300	M274.920	07/15 ⇨
GLE GLE 350 e 4-matic	M274.920	06/20 ⇨
CLASSE A III A 160	M270.910	07/15 ⇨ 05/18
CLASSE A III A 180	M270.910	09/12 ⇨ 05/18
CLASSE A III A 200	M270.910	06/12 ⇨ 05/18
CLASSE A III A 220 4-matic	M270.920	05/14 ⇨ 05/18
CLASSE A III A 250	M270.920	06/12 ⇨ 05/18
CLASSE A III A 250 4-matic	M270.920	06/13 ⇨ 05/18
CLASSE A III A 45 AMG 4-matic	M133.980	06/13 ⇨ 05/18
CLASSE A III AMG A 45 4-matic	M133.980	07/15 ⇨ 05/18

FACET 9.6527

05,5

COILS

Adatt./Suitable:

HITACHI
133965

MAZDA
P51B-18-100
PE01-18-100
PE20-18-100
PE20-18-100A
PYFS-18-100

- **NEW - ITEM NOW AVAILABLE FROM PRODUCTION**
- NUOVO - ARTICOLO ORA DISPONIBILE PER LA VENDITA
- NOUVEAU - ARTICLE DISPONIBLE EN PRODUCTION COURANTE
- NEU - JETZT ZUM VERKAUF VERFÜGBARER ARTIKEL
- NUEVO - ARTICULO AHORA DISPONIBLE EN PRODUCCION

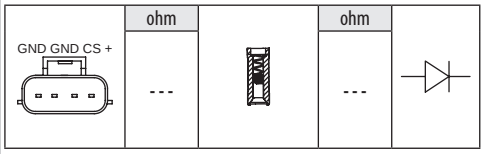

MAZDA		
2 III 1.5	P5X0, P5X2, P5Y4, P5Y5, P5Y6, P5Y8, P5Z7, P5Z8, P5Z9	08/14 ⇨
2 III 1.5 SKYACTIV-G	P5X0, P5X2, P5Y5, P5Y6, P5Y8, P5Z2, P5Z3, P5Z7, P5Z8, P5Z9	08/14 ⇨
3 III 1.5	P5-VPS, P5Y1, P5Y4, P5Y5, P5Z3	09/13 ⇨
3 III 2.0	LFX, PEX2, PEXL, PEY5, PEY7	07/13 ⇨
3 III 2.0 Hybrid	--, PE-VPH	10/14 ⇨
3 IV 1.5 SKYACTIV-G	P5X4	11/18 ⇨
3 IV 2.0 SKYACTIV-G	PEXN, PEXP	11/18 ⇨
3 IV 2.0 SKYACTIV-G M Hybrid	PEXN	11/18 ⇨
3 IV 2.0 SKYACTIV-X M Hybrid	HFY7	02/21 ⇨
3 IV SKYACTIV-X M Hybrid	HFY7	02/21 ⇨
3 IV SKYACTIV-X M Hybrid AWD	HFY7	02/21 ⇨
6 III 2.0	PE-VPR, PEXB, PEXL, PEY5, PEY7	12/12 ⇨
6 III 2.5	PYY1, PYY3, PY-Y8, PYZ4, PYZ8, PY-ZA, PYZC	12/12 ⇨

MAZDA		
CX-3 2.0 SKYACTIV-G	PEX3, PEXB, PEXT	05/15 ⇨
CX-3 2.0 SKYACTIV-G AWD	PEX3, PEXB, PEXT	05/15 ⇨
CX-5 2.0	PE-VPS, PEX3, PEXB, PEXP, PEY4, PEY5, PEY6, PEY7	11/11 ⇨
CX-5 2.0 AWD	PE-VPS, PEX3, PEXB, PEXP, PEY4, PEY5, PEY6, PEY7	11/11 ⇨
CX-5 2.0 SKYACTIV-G	PEXB, PEXP	03/18 ⇨
CX-5 2.0 SKYACTIV-G AWD	PEXB, PEXP	03/18 ⇨
CX-5 2.5	PY-VPS, PYY1, PYZ8, PYZC	02/13 ⇨
CX-5 2.5 4WD	PY-VPS	07/14 ⇨
CX-5 2.5 AWD	PYY1, PY-Y8, PYZ8, PY-ZA, PYZC	02/15 ⇨
CX-5 SKYACTIV-G	PEY7	04/15 ⇨ 02/17
CX-5 SKYACTIV-G AWD	PEY7, PYY1	04/15 ⇨ 02/17
CX-9 2.5 T AWD	PYZ4	06/16 ⇨
CX-30 e-SKYACTIV-X M Hybrid	HFY7	06/21 ⇨
CX-30 e-SKYACTIV-X M Hybrid AWD	HFY7	06/21 ⇨
CX-30 SKYACTIV-G M Hybrid	PEXN, PEXW	07/19 ⇨
CX-30 SKYACTIV-G M Hybrid AWD	PEXN, PEXW	07/19 ⇨
CX-30 SKYACTIV-X M Hybrid	HFY1	07/19 ⇨
CX-30 SKYACTIV-X M Hybrid AWD	HFY1	07/19 ⇨
MX-5 IV 1.5	P5-VPR, P5X1, P5Z1	06/15 ⇨
MX-5 IV 2.0	PEX4, PEX6, PEXF	06/15 ⇨

FACET 9.6531

07

COILS

Adatt./Suitable:

GENERAL MOTORS
12 635 672
12 670 053
12 697 989

HITACHI
134093
2504093

OPEL
12 08 117
12635672
12670053
12697989

VAUXHALL
12635672
12670053
12697989

- **NEW - ITEM NOW AVAILABLE FROM PRODUCTION**
- NUOVO - ARTICOLO ORA DISPONIBILE PER LA VENDITA
- NOUVEAU - ARTICLE DISPONIBLE EN PRODUCTION COURANTE
- NEU - JETZT ZUM VERKAUF VERFÜGBARER ARTIKEL
- NUEVO - ARTICULO AHORA DISPONIBLE EN PRODUCCION

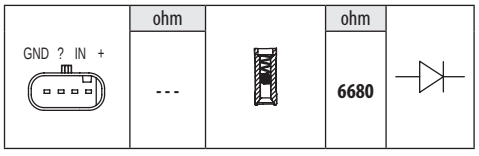

OPEL		
ADAM 1.0	B10XFL, B10XFT, D10XFL, D10XFT	07/14 ⇨ 11/18
ASTRA K 1.0	D10XFL	05/18 ⇨
ASTRA K 1.0 Turbo	B10XFL, D10XFL	06/15 ⇨
ASTRA K 1.4	D14XFT	06/18 ⇨
ASTRA K 1.4 CNG	B14XNT	10/17 ⇨
ASTRA K 1.4 Turbo	B14XFL, B14XFT, D14XFT, D14XFL	06/15 ⇨
CORSA E 1.0	B10XFL, B10XFT, D10XFL, F10XFL	09/14 ⇨
INSIGNIA B 1.5	B15SFL, B15SFT, D15SFL, D15SFT	03/17 ⇨
MOKKA 1.4 4x4	B14XFT	06/16 ⇨
VAUXHALL		
ADAM 1.0	B10XFL, B10XFT, D10XFT	07/14 ⇨
ASTRA VII 1.0	B10XFL, D10XFL	07/15 ⇨
ASTRA VII 1.4 Turbo	B14XFL, B14XFT	07/15 ⇨
CORSA E 1.0	B10XFL, B10XFT, D10XFL, D10XFT, F10XFL	08/14 ⇨
INSIGNIA 1.5	B15SFL, B15SFT, D15SFL, D15SFT, D15XHT	03/17 ⇨
MOKKA / MOKKA X 1.4 4x4	B14XFT	06/16 ⇨

FACET **9.6532** 05,5

COILS

Adatt./Suitable:

BMW
12 13 7 619 385
12 13 8 615 991
12 13 8 643 360
12 13 8 647 463
12 13 8 678 438
8 643 360

BOSCH
0 986 221 124

HITACHI
134090
2504090

MINI
12 13 7 619 385
12 13 8 615 991
12 13 8 643 360
12 13 8 647 463
12 13 8 678 438
8 643 360
8 647 463

TOYOTA
90118-WA474

NEW - ITEM NOW AVAILABLE FROM PRODUCTION
- NUOVO - ARTICOLO ORA DISPONIBILE PER LA VENDITA
- NOUVEAU - ARTICLE DISPONIBLE EN PRODUCTION COURANTE
- NEU - JETZT ZUM VERKAUF VERFÜGBARER ARTIKEL
- NUEVO - ARTICULO AHORA DISPONIBLE EN PRODUCCION

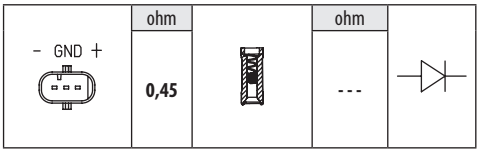

BMW		
3 VI 318 i	B38B15A	07/15 ⇨ 06/19
3 VI 320 i	B48B20A	07/15 ⇨
3 VI 320 i xDrive	B48B20A	07/15 ⇨
3 VI 330 e	B48B20A	11/15 ⇨ 10/18
3 VI 330 i	B46B20B, B48B20B	07/15 ⇨
3 VI 330 i xDrive	B48B20B	07/15 ⇨
3 VI 340 i	B58B30A	07/15 ⇨
3 VI 340 i xDrive	B58B30A	07/15 ⇨
1 II 116 i	B38B15A	03/15 ⇨
1 II 118 i	B38B15A	03/15 ⇨
1 II 120 i	B48B20A	07/16 ⇨
1 II 125 i	B48B20B	10/15 ⇨
1 II M 140 i	B58B30A	10/15 ⇨
1 II M 140 i xDrive	B58B30A	09/15 ⇨
1 III 116 i	B38A15A	11/20 ⇨
1 III 118 i	B38A15A	07/19 ⇨
1 III 120 i	B48A20A, B48A20F	11/20 ⇨
1 III 128 ti	B48A20B, B48A20E	11/20 ⇨
1 III M 135 i xDrive	B48A20E	07/19 ⇨
2 216 i	B38A15A	09/14 ⇨
2 218 i	B38A15A, B38B15A	07/14 ⇨
2 220 i	B48A20A, B48A20F, B48B20A	03/14 ⇨
2 220 i xDrive	B48A20A	03/21 ⇨
2 225 i	B48A20B	11/13 ⇨
2 225 i xDrive	B48A20B	03/14 ⇨
2 225 xe Plug-in-Hybrid	B38A15A	11/14 ⇨
2 230 i	B48B20B	07/16 ⇨
2 M 235 i xDrive	B48A20E	11/19 ⇨
2 M 240 i	B58B30A	09/15 ⇨
2 M 240 i xDrive	B58B30A	09/15 ⇨
3 III 320 i	B46B20B, B48B20A	11/19 ⇨
3 III 330 i	B48B20B	07/19 ⇨
3 III M 340 i xDrive	B58B30B	11/19 ⇨
3 VII 318 i	B48B20A	03/20 ⇨
3 VII 320 e Plug-in-Hybrid	B48B20A	07/20 ⇨
3 VII 320 e Plug-in-Hybrid xDrive	B48B20A	03/21 ⇨
3 VII 320 i	B46B20B, B48B20A, B48B20B	03/19 ⇨
3 VII 320 i 1.6	B48B16A	03/19 ⇨
3 VII 320 i xDrive	B48B20A	07/19 ⇨
3 VII 330 e Plug-in-Hybrid	B46B20B, B48B20A	07/19 ⇨
3 VII 330 e Plug-in-Hybrid xDrive	B48B20A	07/20 ⇨
3 VII 330 i	B48B20B	11/18 ⇨
3 VII 330 i xDrive	B46B20B, B48B20B	11/18 ⇨

BMW		
3 VII M 340 i Mild-Hybrid xDrive	B58B30B	11/20 ⇨
3 VII M 340 i xDrive	B58B30B	03/19 ⇨
3 VII M3	S58B30B	11/20 ⇨
3 VII M3 Competition	S58B30A	11/20 ⇨
3 VII M3 Competition xDrive	S58B30A	05/21 ⇨
4 418 i	B38B15A	07/15 ⇨
4 420 i	B46B20B, B48B20A	03/16 ⇨
4 420 i 1.6	B48B16A	11/20 ⇨
4 420 i xDrive	B48B20A	03/16 ⇨
4 430 i	B46B20B, B48B20B	03/16 ⇨
4 430 i xDrive	B48B20B	03/16 ⇨
4 440 i	B58B30A	03/16 ⇨
4 440 i xDrive	B58B30A	03/16 ⇨
4 M 440 i Mild-Hybrid	B58B30B	07/21 ⇨
4 M 440 i Mild-Hybrid xDrive	B58B30B	07/20 ⇨
4 M4	S58B30B	11/20 ⇨
4 M4 Competition	S58B30A	11/20 ⇨
4 M4 Competition M xDrive	S58B30A	07/21 ⇨
4 SERIES M440i xDrive Coupe Mild-Hybrid	B58B30B	11/20 ⇨
5 VII 520 E PLUG-IN-HYBRID	B48B20A	03/21 ⇨
5 VII 520 i	B48B16A, B48B20A, B48B20B	07/17 ⇨
5 VII 520 i Mild-Hybrid	B48B20A	07/20 ⇨
5 VII 530 e Plug-in-Hybrid	B46B20B, B48B20A	03/17 ⇨
5 VII 530 e Plug-in-Hybrid xDrive	B46B20B, B48B20A	03/17 ⇨
5 VII 530 i	B46B20B, B48B20B	09/16 ⇨
5 VII 530 i Mild-Hybrid	B48B20B	07/20 ⇨
5 VII 530 i Mild-Hybrid xDrive	B48B20B	07/20 ⇨
5 VII 530 i xDrive	B46B20B, B48B20B	09/16 ⇨
5 VII 540 i	B58B30A	09/16 ⇨ 06/20
5 VII 540 i Mild-Hybrid	B58B30C	07/20 ⇨
5 VII 540 i Mild-Hybrid xDrive	B58B30C	07/20 ⇨
5 VII 540 i xDrive	B58B30A	09/16 ⇨
5 VII 545 e Plug-in-Hybrid xDrive	B58B30C	11/20 ⇨
6 IV GT 630 i	B48B20B	06/17 ⇨ 06/20
6 IV GT 630 i Mild-Hybrid	B48B20B	07/20 ⇨
6 IV GT 630 i xDrive	B58B30C	07/19 ⇨
6 IV GT 640 i	B58B30A, B58B30C	06/17 ⇨ 06/20
6 IV GT 640 i Mild-Hybrid	B58B30C	07/20 ⇨
6 IV GT 640 i Mild-Hybrid xDrive	B58B30C	07/20 ⇨
6 IV GT 640 i xDrive	B58B30A, B58B30C	06/17 ⇨ 06/20
8 840 i	B58B30C	07/19 ⇨
8 840 i xDrive	B58B30C	07/19 ⇨
X1 II sDrive 18 i	B38A15A	11/15 ⇨
X1 II sDrive 20 i	B48A20A, B48A20F	07/15 ⇨
X1 II xDrive 20 i	B48A20A, B48A20B, B48A20F	07/15 ⇨
X1 II xDrive 25 e Plug-in-Hybrid	B38A15A	03/20 ⇨
X1 II xDrive 25 i	B46A20B, B48A20B	07/15 ⇨
7 VI 730 i	B48B20B	11/15 ⇨
7 VI 730 i, Li	B48B20B	11/15 ⇨
7 VI 740 e, Le	B48B20B	07/16 ⇨ 02/19
7 VI 740 i, Li	B58B30A, B58B30C	07/15 ⇨
7 VI 740 Le xDrive	B48B20B	07/16 ⇨ 02/19
7 VI 740 Li xDrive	B58B30A, B58B30C	03/16 ⇨
7 VI 745 e, Le Plug-in-Hybrid	B58B30C	03/19 ⇨
7 VI 745 Le Plug-in-Hybrid xDrive	B58B30C	03/19 ⇨
X2 M35 i	B48A20E	11/18 ⇨
X2 sDrive 18 i	B32S15A, B38A15A	03/18 ⇨
X2 sDrive 20 i	B42S20A, B48A20A, B48A20F	11/17 ⇨
X2 xDrive 20 i	B48A20A	03/18 ⇨
X2 xDrive 25 e Plug-in-Hybrid	B38A15A	03/20 ⇨
X3 III M	S58B30A	03/19 ⇨
X3 III M Competition	S58B30A	03/19 ⇨
X3 III sDrive 20 i	B48B20A	12/17 ⇨
X3 III sDrive 20 i 1.6	B48B16A	12/17 ⇨
X3 III xDrive 20 i	B48B20A	12/17 ⇨
X3 III xDrive 20 i Mild Hybrid	B48B20B	08/21 ⇨
X3 III xDrive 30 e Plug-in-Hybrid	B46B20B, B48B20A	12/19 ⇨
X3 III xDrive 30 i	B46B20B, B48B20B	08/17 ⇨
X3 III xDrive 30 i Mild Hybrid	B48B20B	08/21 ⇨
X3 III xDrive M40 i	B58B30A, B58B30B	08/17 ⇨
X4 II M	S58B30A	03/19 ⇨
X4 II M Competition	S58B30A	03/19 ⇨
X4 II M40 i xDrive	B58B30A, B58B30B	04/18 ⇨
X4 II xDrive 20 i	B48B20A	04/18 ⇨
X4 II xDrive 20 i Mild Hybrid	B46B20B, B48B20A	08/21 ⇨
X4 II xDrive 30 i	B48B20B	04/18 ⇨
X4 II xDrive 30 i Mild Hybrid	B46B20B, B48B20B	07/21 ⇨
X5 IV xDrive 40 i	B58B30C	08/18 ⇨

BMW		
X5 IV xDrive 40 i Mild-Hybrid	B58B30C	12/20 ⇨
X5 IV xDrive 45 e Plug-in-Hybrid	B58B30C	06/19 ⇨
X6 III xDrive 40 i	B58B30C	08/19 ⇨
X6 III xDrive 40 i Mild-Hybrid	B58B30C	12/20 ⇨
X7 xDrive 40 i	B58B30C	03/19 ⇨
X7 xDrive 40 i Mild-Hybrid	B58B30C	12/20 ⇨
MINI		
MINI III Cooper	B36A15A, B38A15A, B38A15F	09/13 ⇨
MINI III Cooper ALL4	B38A15A, B38A15F	10/16 ⇨
MINI III Cooper S	B46A20A, B48A20A, B48A20F	09/13 ⇨
MINI III Cooper S ALL4	B46A20A, B48A20A, B48A20F	04/15 ⇨
MINI III Cooper S JCW	B46A20A, B48A20A, B48A20F	09/13 ⇨
MINI III Cooper S JCW ALL4	B48A20A	11/14 ⇨
MINI III Cooper SE ALL4	B38A15A	01/17 ⇨
MINI III John Cooper Works	B46A20B, B48A20B, B48A20E	03/15 ⇨
MINI III John Cooper Works ALL4	B48A20B, B48A20E	03/17 ⇨
MINI III John Cooper Works GP	B48A20E	03/20 ⇨
MINI III One	B38A12A, B38A15A	04/14 ⇨
MINI III One First	B38A12A, B38A15A	06/14 ⇨
TOYOTA		
SUPRA 2.0	B48H, B48L	06/19 ⇨
SUPRA 3.0 GR	B58	03/19 ⇨

FACET **9.6536** 05,5

COILS

Adatt./Suitable:

AUDI
06H 905 110 D
06H 905 110 E
06H 905 110 F
06H 905 110 G
06H 905 110 H
06H 905 110 L
06K 905 110 K
06L 905 110 C
06L 905 110 D
06L 905 110 E
06L 905 110 F
06L 905 110 H
06L 905 110 K

BENTLEY
06H 905 110 G
06H 905 110 L

BOSCH
0 986 221 072

CUPRA
06H 905 110 L
06L 905 110 K

HITACHI
134052
2504052

MAGNETI MARELLI
060717182012
060717200012

PORSCHE
958 905 110 00
958 905 110 01
PAC 905 110
PAC 905 110 A

SEAT
06H 905 110 D
06H 905 110 E
06H 905 110 F
06H 905 110 G
06H 905 110 H
06H 905 110 L
06L 905 110 B
06L 905 110 C
06L 905 110 D
06L 905 110 E
06L 905 110 F
06L 905 110 H
06L 905 110 K

SKODA
06H 905 110 D
06H 905 110 E
06H 905 110 F
06H 905 110 G
06H 905 110 H
06H 905 110 L
06L 905 110 C
06L 905 110 D
06L 905 110 E
06L 905 110 F
06L 905 110 H
06L 905 110 K

VW
06H 905 110 D
06H 905 110 E
06H 905 110 F
06H 905 110 G
06H 905 110 H
06H 905 110 L
06K 905 110 K
06L 905 110 A
06L 905 110 B
06L 905 110 C
06L 905 110 D
06L 905 110 E
06L 905 110 F
06L 905 110 H
06L 905 110 K

- **NEW - ITEM NOW AVAILABLE FROM PRODUCTION**
- NUOVO - ARTICOLO ORA DISPONIBILE PER LA VENDITA
- NOUVEAU - ARTICLE DISPONIBLE EN PRODUCTION COURANTE
- NEU - JETZT ZUM VERKAUF VERFÜGBARER ARTIKEL
- NUEVO - ARTICULO AHORA DISPONIBLE EN PRODUCCION

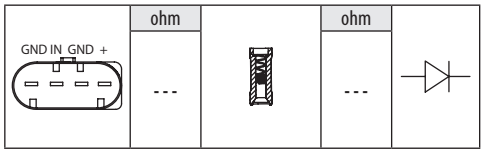

AUDI		
A1 1.8 TFSI	DAJB	02/15 ⇨ 10/18
A1 40 TFSI	CZPC, DKZC, DNND	09/18 ⇨
A4 IV 1.8 TFSI	CJEB	11/11 ⇨ 12/15
A4 IV 1.8 TFSI quattro	CJEB	11/11 ⇨ 12/15
A4 IV 2.0 TFSI	CNCD	05/13 ⇨ 12/15
A4 IV 2.0 TFSI quattro	CNCD	05/13 ⇨ 12/15
A3 III 1.8 TFSI	CJSA, CJSB, CNSB	04/12 ⇨
A3 III 1.8 TFSI quattro	CJSB	08/12 ⇨

AUDI		
A3 III 2.0 TFSI	CZPB, DKZA	05/16 ⇨ 10/20
A3 III 2.0 TFSI quattro	CZPB, DKZA	05/16 ⇨ 10/20
A3 III 40 TFSI	CZPB, DKZA	07/18 ⇨ 10/20
A3 III 40 TFSI quattro	CZPB, DKZA	07/18 ⇨ 10/20
A3 III S3 quattro	CJXD, CJXG, DJHA, DJHB, DNUE	11/12 ⇨ 10/20
A3 IV S3 quattro	DNFB	06/20 ⇨
A4 V 2.0 TFSI	CYMC, CYRB, CYRC	05/15 ⇨ 11/19
A4 V 2.0 TFSI Mild Hybrid	DDWA	05/17 ⇨ 11/19
A4 V 2.0 TFSI Mild Hybrid quattro	DDWA	05/17 ⇨
A4 V 2.0 TFSI quattro	CYMC, CYRB, CYRC	05/15 ⇨
A4 V 35 TFSI Mild Hybrid	DLVB, DMSB	12/18 ⇨
A4 V 40 TFSI Mild Hybrid	DMSA	06/20 ⇨
A4 V 40 TFSI Mild Hybrid quattro	DMSA	06/20 ⇨
A4 V 45 TFSI Mild Hybrid	DKNA	07/18 ⇨ 11/19
A4 V 45 TFSI Mild Hybrid quattro	DKNA, DMTA	07/18 ⇨
A4 V ALLROAD 2.0 TFSI Mild Hybrid quattro	DDWA	11/18 ⇨ 10/19
A4 V ALLROAD 2.0 TFSI quattro	CYMC, CYRB, CYRC	01/16 ⇨
A4 V ALLROAD 45 TFSI Mild Hybrid quattro	DKNA, DMTA	07/18 ⇨
A5 I 1.8 TFSI	CJEB, CJED, CJEE	10/07 ⇨ 01/17
A5 I 2.0 TFSI	CNCD	05/13 ⇨ 05/16
A5 I 2.0 TFSI quattro	CNCD	05/13 ⇨ 05/16
A4 IV ALLROAD 2.0 TFSI quattro	CNCD	05/13 ⇨ 05/16
A5 II 2.0 TFSI	CYRB	11/16 ⇨ 02/20
A5 II 2.0 TFSI Mild Hybrid	DDWA	05/17 ⇨ 02/20
A5 II 2.0 TFSI Mild Hybrid quattro	DDWA, DLHB	05/17 ⇨
A5 II 2.0 TFSI quattro	CYMC, CYRB, CYRC	06/16 ⇨
A5 II 35 TFSI Mild Hybrid	DLVB, DMSB	08/18 ⇨
A5 II 40 TFSI Mild Hybrid	DMSA	05/20 ⇨
A5 II 40 TFSI Mild Hybrid quattro	DMSA	06/20 ⇨
A5 II 45 TFSI Mild Hybrid	DKNA	07/18 ⇨ 02/20
A5 II 45 TFSI Mild Hybrid quattro	DKNA, DMTA, DPAA	07/18 ⇨
A6 IV 1.8 TFSI	CYGA	09/14 ⇨ 09/18
A6 IV 2.0 TFSI	CYNB, CYPA	09/14 ⇨ 09/18
A6 IV 2.0 TFSI quattro	CYNB, CYPA	05/14 ⇨ 09/18
A6 V 40 TFSI	DMTC	09/20 ⇨
A6 V 45 TFSI Mild Hybrid	DKNA, DLHA, DMTA	08/18 ⇨
A6 V 45 TFSI Mild Hybrid quattro	DKNA, DLHA, DMTA	08/18 ⇨
A6 V 50 TFSi e quattro	DLGA, DRYA	11/19 ⇨
A6 V 55 TFSI e quattro	DLGA, DRYA	11/19 ⇨
A7 SPORTBACK 2.0 TFSI	CYPA	09/14 ⇨ 05/18
A7 2.0 50 TFSi e	DLGA	11/19 ⇨
A7 45 TFSI Mild Hybrid	DKNA, DLHA	07/18 ⇨
A7 45 TFSI Mild hybrid quattro	DKNA, DLHA	07/18 ⇨
A7 55 TFSI e quattro	DLGA	07/19 ⇨
Q7 II 2.0 TFSI	CVJA	08/15 ⇨
Q7 II 2.0 TFSI quattro	CYRB	08/15 ⇨
Q2 2.0 TFSI quattro	CZPB, DKZA	05/17 ⇨
Q2 SQ2 TFSI quattro	DNFC, DNUE	08/18 ⇨
Q5 I 2.0 TFSI quattro	CNCB, CNCD	08/09 ⇨ 05/17
Q5 II 2.0 TFSI quattro	DAXB, DAXC, DAYB	06/16 ⇨
Q5 II 35 TDI	DTNA	10/21 ⇨
Q5 II 45 TFSI Mild Hybrid quattro	DNTA, DPUA, DPVA	12/18 ⇨
Q5 II 45 TFSI quattro	DPVA	11/20 ⇨
Q5 II 50 TFSI e quattro	DLGA	04/19 ⇨
Q5 II 55 TFSI e quattro	DLGA	08/19 ⇨ 11/20
Q8 45 TFSI	DMFA, DNEA	07/20 ⇨
Q8 45 TFSI quattro	DMFA, DNEA	10/19 ⇨
TT III 1.8 TFSI	CJSA, CJSB	07/15 ⇨ 08/18
TT III 2.0 TTS quattro	CJXF, CJXG, CYFB, DNUF	11/14 ⇨
TT III 40 TFSI	DKZB, DNNB	07/18 ⇨

BENTLEY		
BENTAYGA 3.0 Hybrid	DCBE	08/18 ⇨
BENTAYGA 4.0	DCUA	01/18 ⇨

CUPRA		
FORMENTOR 2.0 TSI	DNPA	03/21 ⇨
FORMENTOR 2.0 TSI 4Drive	DNFB, DNNA	07/20 ⇨
LEON 2.0 TSI	DNFC	06/21 ⇨
LEON 2.0 TSI 4Drive	DNFB	06/21 ⇨

PORSCHE		
CAYENNE III 2.9 S AWD	DCAB, MDC.AB	05/17 ⇨
CAYENNE III 3.0 AWD	DCBE, MDC.BE	05/17 ⇨
CAYENNE III 3.0 E-Hybrid AWD	DCBE, MDC.BE	05/17 ⇨
CAYENNE III 4.0 Turbo AWD	DCUA, MDC.UA	05/17 ⇨
CAYENNE III 4.0 Turbo GT AWD	DWNA	06/21 ⇨

PORSCHE		
CAYENNE III 4.0 Turbo S E-Hybrid AWD	DCUA	10/19 ⇨
MACAN 2.0	DKNA, DLHB, MCN.CC, MCY.NA, MCY.PA	07/14 ⇨
MACAN 2.9 Turbo AWD	DGRC	05/18 ⇨
MACAN 3.0 S	DLZB	05/18 ⇨
PANAMERA 2.9 4	MDG.PA	05/16 ⇨
PANAMERA 2.9 4 E-Hybrid	DGPA, MDG.PA	05/16 ⇨
PANAMERA 2.9 4S	MCS.ZA	05/16 ⇨
PANAMERA 2.9 4S E-Hybrid	CSZA, DGPA	08/20 ⇨
PANAMERA 3.0	MCX.TA	05/16 ⇨
PANAMERA 3.0 4	MCX.TA	05/16 ⇨
PANAMERA 4.0 GTS	CVDD	01/18 ⇨
PANAMERA 4.0 Turbo	MCV.DA	05/16 ⇨
PANAMERA 4.0 Turbo S E-Hybrid	CVDA, MCV.DA	05/17 ⇨

SEAT		
LEON III 1.8 TFSI	CJSA	02/13 ⇨
LEON III 1.8 TSI	CJSA	02/13 ⇨
LEON III 1.8 TSI 4Drive	CJSA, CJSB	11/14 ⇨
LEON III 2.0 TSI	DKZA	09/18 ⇨
LEON III 2.0 TSI 4Drive	DKZA	09/18 ⇨
LEON IV 2.0 TFSI	DNNA	03/21 ⇨
TARRACO 2.0 TFSI 4Drive	DNPA	01/21 ⇨
TARRACO 2.0 TSI 4Drive	DKZA	11/18 ⇨

SKODA		
KAROQ 2.0 TSI 4x4	DKZA, DNNA	04/19 ⇨
KODIAQ 2.0 TSI 4x4	CZPA, DKZA, DNNA	10/16 ⇨
OCTAVIA III 1.8 TSI	CJSA, CJSB	11/12 ⇨
OCTAVIA III 1.8 TSI 4x4	CJSA, CJSB	11/12 ⇨
OCTAVIA III 2.0 TSI	DKZA	02/17 ⇨
OCTAVIA III 2.0 TSI 4x4	DKZA	02/19 ⇨
SUPERB III 1.8 TSI	CJSA, CJSC	03/15 ⇨

VW		
ARTEON 2.0 TSI	CZPB, DKZA, DNNA	05/17 ⇨
ARTEON 2.0 TSI 4motion	DJHC, DLRB	06/20 ⇨
BEETLE 2.0 TSI	CPLA, CPPA, CULC	12/12 ⇨ 07/19
POLO VI 2.0 GTI	CZPC, DKZC	11/17 ⇨
GOLF VII 1.8 TSI 4motion	CJSB	12/14 ⇨
GOLF VII 2.0 GTI	CXCA, CXDA	04/13 ⇨
GOLF VII 2.0 GTI TCR	CJXH, DNUC	11/18 ⇨
GOLF VII 2.0 R 4motion	CJXC, CJXD, CJXG, DJHA, DJHB, DNUC, DNUE	11/13 ⇨
PASSAT VI 1.8 TSI	CJSA, CJSC	02/15 ⇨
PASSAT VI 2.0 TSI	CXDA, CZPB, DKZA, DRFA	08/14 ⇨
GOLF VIII 2.0 GTI	DNPA	09/20 ⇨
GOLF VIII 2.0 GTI Clubsport	DNFC	10/20 ⇨
GOLF VIII 2.0 TSI R 4motion	DNFG, DSFE, DSFF	09/20 ⇨
JETTA VI 1.8 TSI	CPKA, CPRA	07/14 ⇨
JETTA VI 2.0 TSI	CPLA, CPPA	12/12 ⇨ 12/17
MULTIVAN 2.0 TSi	DRNB	10/21 ⇨
POLO V 1.8 GTI	DAJA, DAJB	11/14 ⇨
PASSAT V 1.8 TSI	CPKA, CPRA	06/13 ⇨
T-ROC 2.0 R 4motion	DNFC, DNUE	09/19 ⇨
T-ROC 2.0 TSI 4motion	CZPB, DKZA, DNNA	07/17 ⇨
TIGUAN II 2.0 TSI	DGUA, DTEA	04/17 ⇨
TIGUAN II 2.0 TSI 4motion	CXDA, CZPA, DGUA, DGVA, DKZA, DNJA, DNLA, DNNA, DNPA, DTEA	01/16 ⇨
TIGUAN II 2.0 TSI R 4motion	DNFG	11/20 ⇨
TOUAREG II 2.0 TFSi 4motion	CYRC	05/18 ⇨
TOURAN II 1.8 TSI	CJSA	11/15 ⇨

FACET 9.6538 — 05,5

COILS

Adatt./Suitable:

HYUNDAI
27301-04110

KIA
27301-04110

- **NEW - ITEM NOW AVAILABLE FROM PRODUCTION**
- NUOVO - ARTICOLO ORA DISPONIBILE PER LA VENDITA
- NOUVEAU - ARTICLE DISPONIBLE EN PRODUCTION COURANTE
- NEU - JETZT ZUM VERKAUF VERFÜGBARER ARTIKEL
- NUEVO - ARTICULO AHORA DISPONIBLE EN PRODUCCION

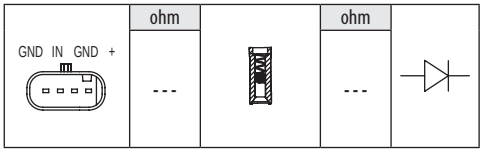

HYUNDAI		
I20 II 1.0 T-GDI	G3LC	09/15 ⇨
I30 III 1.0 T-GDi	G3LC	11/16 ⇨
KONA 1.0 T-GDi	G3LC	07/17 ⇨
KIA		
CEED II 1.0 T-GDI	G3LC	04/15 ⇨ 07/18
CEED III 1.0 T-GDI	G3LC	03/18 ⇨
CEED III T-GDI	G3LC	03/18 ⇨
PICANTO III 1.0	G3LA, G3LD	03/17 ⇨
PICANTO III 1.0 LPG	G3LA	11/18 ⇨
PICANTO III 1.0 T-GDi	G3LC	03/17 ⇨
PROCEED 1.0 T-GDI	G3LC	10/18 ⇨
PRO CEE'D II 1.0 T-GDI	G3LC	07/15 ⇨ 07/18
RIO IV 1.0 T-GDI 100	G3LC, G3LE	01/17 ⇨
RIO IV 1.0 T-GDI 100 Eco-Dynamics+	G3LF	02/17 ⇨
RIO IV 1.0 T-GDI 120	G3LC	01/17 ⇨
STONIC 1.0 T-GDi	G3LC	07/17 ⇨
XCEED 1.0 T-GDI	G3LC	06/19 ⇨

FACET 9.6545 — 05,5

COILS

Adatt./Suitable:

TOYOTA
90919-02271

- **NEW - ITEM NOW AVAILABLE FROM PRODUCTION**
- NUOVO - ARTICOLO ORA DISPONIBILE PER LA VENDITA
- NOUVEAU - ARTICLE DISPONIBLE EN PRODUCTION COURANTE
- NEU - JETZT ZUM VERKAUF VERFÜGBARER ARTIKEL
- NUEVO - ARTICULO AHORA DISPONIBLE EN PRODUCCION

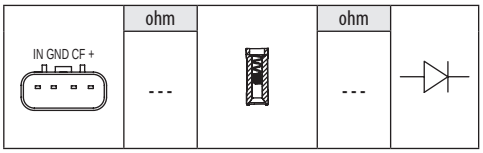

TOYOTA		
AURIS II 1.2	8NR-FTS	03/15 ⇨ 12/18
C-HR 1.2	8NR-FTS	10/16 ⇨
C-HR 1.2 4WD	8NR-FTS	10/16 ⇨
COROLLA 1.2	8NR-FTS	01/19 ⇨

FACET 9.6547 — 05,5

COILS

Adatt./Suitable:

HYUNDAI
27301-03HA0

KIA
27301-03HA0

- **NEW - ITEM NOW AVAILABLE FROM PRODUCTION**
- NUOVO - ARTICOLO ORA DISPONIBILE PER LA VENDITA
- NOUVEAU - ARTICLE DISPONIBLE EN PRODUCTION COURANTE
- NEU - JETZT ZUM VERKAUF VERFÜGBARER ARTIKEL
- NUEVO - ARTICULO AHORA DISPONIBLE EN PRODUCCION

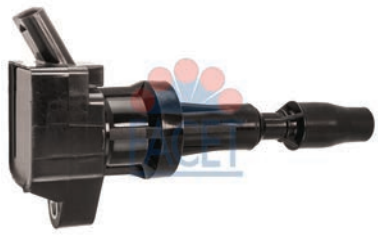

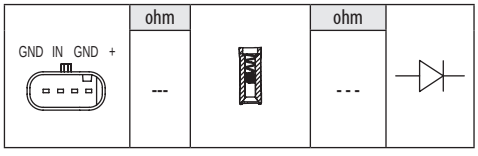

HYUNDAI		
IONIQ 1.6 GDI Hybrid	G4LE	03/16 ⇨
IONIQ 1.6 GDI Plug-in Hybrid	G4LE	03/16 ⇨
KONA 1.6 GDi Hybrid	G4LE	06/19 ⇨
KIA		
CEED III 1.6 GDI Hybrid	G4LE	12/19 ⇨
CEED III GDI Hybrid	G4LE	12/19 ⇨
NIRO 1.6 GDI Hybrid	G4LE	09/16 ⇨
NIRO GDI Hybrid	G4LE	09/16 ⇨
XCEED 1.6 GDI Hybrid	G4LE	12/19 ⇨

FACET 9.8003 — 07,5

COILS

Adatt./Suitable:

FIAT
7588436
7746226

LANCIA
7588436

MAGNETI MARELLI
064825072010
581700540000
581700540010
648 250 72
AEI 600 C
AEI 600 F

- [03] **Supplied until depletion**
- Fornibile fino ad esaurimento delle scorte
- Fourni jusqu'à épuisement du stock
- Lieferbar solange vorrat reicht
- Suministrado hasta el stock termina

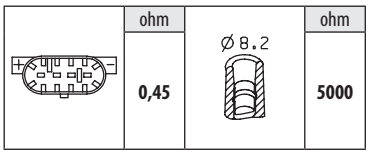

FIAT		
COUPE 2.0 16V	836A3.000	11/93 ⇨ 08/96
COUPE 2.0 16V [BRA]	836A3.011	11/93 ⇨ 08/96
CROMA I 2000 i.e.	154C3.000, 834B.000	03/87 ⇨ 09/92
CROMA I 2000 i.e. Turbo	154C4.000, 154C4.046, 834C.146	11/86 ⇨ 08/96
TEMPRA 1.8 4x4	159A4.000	07/92 ⇨ 06/93
TEMPRA 1.8 i.e.	159A4.000, 159A4.046	03/90 ⇨ 08/96
TEMPRA 2.0	159A6.046	04/90 ⇨ 06/93
TEMPRA 2.0 i.e.	159A6.046	10/90 ⇨ 09/96
TEMPRA 2.0 i.e. [BRA]	159A6.011	04/93 ⇨ 12/96
TEMPRA 2.0 i.e. 4x4	159A6.046	03/92 ⇨ 03/95
TIPO I 1.8 i.e.	159A4.000, 159A4.046	10/90 ⇨ 06/93
TIPO I 1.8 i.e.16V Sport	160A5.000	11/89 ⇨ 06/92
TIPO I 2.0	159A5.046, 159A6.046, 836A3.011	10/90 ⇨ 04/95
TIPO I 2.0 16V	160A8.046	07/91 ⇨ 04/95
TIPO I 2.0 i.e.	159A5.046, 159A6.046	03/90 ⇨ 04/95
TIPO I 2.0 i.e. [BRA]	159A6.011	03/93 ⇨ 10/95
TIPO I 2.0 i.e. 16V Sport	836A3.000	03/93 ⇨ 04/95
UNO 1.3 Turbo i.e.	146A2.000, 146A2.246	04/85 ⇨ 03/91
UNO 1.4 Turbo i.e.	146A8.000, 146A8.046	09/89 ⇨ 12/96
FIAT (BR)		
COUPÈ 2.0i 16V	2.0Mpi	01/95 ⇨ 12/97
TIPO 2.0i 16V	2.0Mpi	01/94 ⇨ 12/95
TIPO 2.0i 8v	2.0Mpi	01/94 ⇨ 12/95
UNO 1.4i Turbo	1.4Mpi	01/94 ⇨ 12/96
LANCIA		
DEDRA 1.6	835A1000	07/94 ⇨ 02/97
DEDRA 1.6 i.e.	835A1.000	08/89 ⇨ 06/94
DEDRA 1.8 i.e.	835A2.000, 835A2.046, 835C5.000	09/89 ⇨ 07/99
DEDRA 2.0 16V	836A3.000	07/94 ⇨ 07/99
DEDRA 2.0 HF Integrale	835A7.046	11/90 ⇨ 07/94
DEDRA 2.0 i.e.	835A5.000, 835A5.046	09/89 ⇨ 07/99
DEDRA 2.0 i.e. Turbo	835A8.046	04/91 ⇨ 07/99
DEDRA 2.0 i.e. Turbo Integrale	835A7.000	04/90 ⇨ 08/91
DEDRA 2.0 Integrale	836A3.000	07/94 ⇨ 07/99
DEDRA 2.0 Turbo	835A8.000	11/90 ⇨ 06/94
DELTA I 2.0 16V HF Integrale	831D5.000	03/89 ⇨ 09/91
DELTA I 2.0 HF Integrale	831C5.046	12/86 ⇨ 12/92
DELTA II 2.0 16V	836A3.000	06/93 ⇨ 08/99
THEMA 8.32	F105L, F105L.046	09/87 ⇨ 05/92

FACET 9.8114 — 07

COILS

Adatt./Suitable:

AUDI
6N0 905 104
867 905 352

BOSCH
0 986 221 000
1 227 022 030
1 227 030 030

DENSO
DIC-0200

HITACHI
138419
138701
2508419

MAGNETI MARELLI
060717004012
060717005012
060717007012
060717008012

SEAT
6N0 905 104
867 905 352

SKODA
004 050 014
004 050 016
6N0 905 104

TELEFUNKEN
311 354
339 700

VW
6N0 905 104
867 905 352

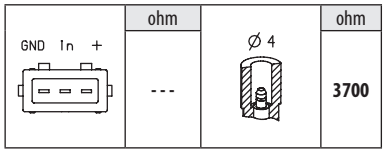

AUDI		
80 IV 2.0 E	ABK	09/91 ⇨ 01/96
80 IV 2.0 E quattro	ABK	09/91 ⇨ 12/94
CABRIOLET 2.0 E	ABK	01/93 ⇨ 07/98
COUPE 2.0	ABK	05/89 ⇨ 12/96
SEAT		
ALHAMBRA I / II 2.0	ADY	03/96 ⇨ 03/10
ALHAMBRA I / II 2.0 i	ADY	04/96 ⇨ 03/10
AROSA 1.0	AER, ALL	05/97 ⇨ 06/04
AROSA 1.4	AEX, AKV, APQ	05/97 ⇨ 06/04
CORDOBA I 1.0 16V	AST, AVZ	05/00 ⇨ 10/02
CORDOBA I 1.0 CL	AAU	02/93 ⇨ 06/96
CORDOBA I 1.0 i	AER	09/96 ⇨ 10/02
CORDOBA I 1.3	AAV	02/93 ⇨ 08/94
CORDOBA I 1.4	ANX	12/97 ⇨ 04/99
CORDOBA I 1.4 i	ABD, AEX, AKV, APQ	06/94 ⇨ 12/02
CORDOBA I 1.4 i 16V	AFH	09/96 ⇨ 10/02
CORDOBA I 1.6 i	1F, ABU, AEE, AFT, ALM	02/93 ⇨ 06/99
CORDOBA I 1.8 i	ABS, ACC, ADZ	02/93 ⇨ 09/02
CORDOBA I 1.8 i 16V	148D	10/93 ⇨ 08/96
CORDOBA I 2.0 i	2E, AGG	02/93 ⇨ 06/99
CORDOBA I 2.0 i 16V	ABF	08/96 ⇨ 06/99
IBIZA II 1.0	AAU	03/93 ⇨ 09/96
IBIZA II 1.0 16V	AST, AVZ	10/99 ⇨ 02/02
IBIZA II 1.0 i	AER	09/96 ⇨ 02/02
IBIZA II 1.3 i	AAV	03/93 ⇨ 08/99
IBIZA II 1.4 i	ABD, AEX	09/93 ⇨ 02/02
IBIZA II 1.4 i 16V	AFH	06/97 ⇨ 02/02
IBIZA II 1.6 i	1F, ABU, AEE, AFT, ALM	03/93 ⇨ 06/99
IBIZA II 1.8 i	ABS, ACC, ADZ	03/93 ⇨ 08/99
IBIZA II 1.8 i 16V	148D	11/93 ⇨ 08/96
IBIZA II 2.0 i	2E, AGG	03/93 ⇨ 08/99
IBIZA II 2.0 i 16V	ABF	08/96 ⇨ 08/99
INCA 1.4 i	AEX, AKV, APQ	11/95 ⇨ 06/03
INCA 1.6 i	1F, AEE	11/95 ⇨ 05/98
TOLEDO I 1.6 i	1F, ABN, AFT, EZ	05/91 ⇨ 03/99
TOLEDO I 1.8 i	ABS, ADZ	11/93 ⇨ 12/96
SEAT		
TOLEDO I 2.0 i	2E, AGG	05/91 ⇨ 03/99
TOLEDO I 2.0 i 16V	ABF	11/93 ⇨ 03/99
SKODA		
FAVORIT 1.3	135B, 136B, 781.135E	09/91 ⇨ 06/97
FAVORIT 1.3 135 X, LX, GLX	781.135E	01/90 ⇨ 09/94
FELICIA 1.3	061GW4G15K, 135, 135I, 136I, 136B	10/94 ⇨ 04/02
FELICIA 1.3 LXI	136I	08/95 ⇨ 03/98
FELICIA 1.6	AEE	06/97 ⇨ 04/02
FELICIA 1.6 GLX	AEE	08/95 ⇨ 03/98
FELICIA 1.6 LX	AEE	08/95 ⇨ 03/98
OCTAVIA I 1.6	AEE	09/96 ⇨ 09/04
VOLKSWAGEN (BR)		
CADDY 1.6i	MY4	11/98 ⇨
POLO 1.6	MJ3, MY4	07/00 ⇨
POLO 1.8	MJ2, MY5, MY6	12/96 ⇨
VW		
POLO II 1.0	AAU, HZ	01/85 ⇨ 09/94
POLO II 1.0 Cat	AAU, ACM	08/89 ⇨ 09/94
POLO II 1.3	3F	10/90 ⇨ 09/94
POLO II 1.3 Cat	2G, 3F, AAV, MH, NZ	07/87 ⇨ 09/94
POLO II 1.3 G40	PY	08/90 ⇨ 09/94
CADDY II 1.4	AEX, APQ	11/95 ⇨ 06/03
CADDY II 1.6	1F, AEE	11/95 ⇨ 12/00
CADDY II 60 1.4	AEX, APQ	11/95 ⇨ 01/04
CADDY II 75 1.6	1F, AEE	11/95 ⇨ 05/97
CADDY III 1.6 [ARG]	UVC	10/05 ⇨
CORRADO 2.0 i	2E, ADY	04/93 ⇨ 12/95
PASSAT III 1.6	1F, ABN, AEK, AFT, EZ	04/88 ⇨ 08/96
PASSAT III 1.8	AAM, ABS, ADZ, RP	02/88 ⇨ 05/97
PASSAT III 2.0	2E, ADY, AEP, AGG	02/90 ⇨ 05/97
PASSAT III 2.0 16V	ABF	01/94 ⇨ 05/97
PASSAT III 2.0 Syncro	2E, ADY, AGG	03/90 ⇨ 12/96
PASSAT III 2.0i	ACX	08/92 ⇨ 12/96
GOLF III 1.4	ABD, AEX	10/91 ⇨ 04/99
GOLF III 1.6	ABU, AEA, AEE, AEK, AFT, AKS	09/92 ⇨ 04/99
GOLF III 1.8	AAM, ABS, ACC, ADZ	08/91 ⇨ 04/99
GOLF III 1.8 Syncro	ABS, ADZ	01/93 ⇨ 04/99
GOLF III 2.0	2E, ADY, AEP, AGG, AKR	11/91 ⇨ 04/99
GOLF III 2.0 GL	AEP	08/95 ⇨ 09/97
GOLF III 2.0 GTI 16V	ABF	08/92 ⇨ 08/97
GOLF III 2.0 Syncro	AGG	08/95 ⇨ 04/99
GOLF IV 1.6	AFT, AKS	06/98 ⇨ 06/02
GOLF IV 1.8	AAM, ADZ, ANN, ANP	06/98 ⇨ 06/02
GOLF IV 2.0	AGG, AKR, ATU, AWF, AWG	06/98 ⇨ 06/02
LUPO 1.0	AER, ALL	09/98 ⇨ 07/05
POLO III 1.0	AER, AEV, ALD, ALL, AUC	10/94 ⇨ 05/02
POLO III 1.4	AEX, AKV, ANX, APQ	05/97 ⇨ 09/01
POLO III 1.4 16V	AFH	10/99 ⇨ 09/01
POLO III 1.6	AEA, AEE, AFT, ALM	09/94 ⇨ 09/01
POLO III 100 1.4 16V	AFH	04/96 ⇨ 10/99
POLO III 100 1.6	AFT	12/95 ⇨ 09/01
POLO III 2.0	ADC	08/99 ⇨ 09/01
POLO III 45 1.0	AEV	10/94 ⇨ 09/96
POLO III 50 1.0	AER, ALD, ALL, AUC	09/96 ⇨ 10/99
POLO III 54 1.4	ANX	01/98 ⇨ 08/99
POLO III 55 1.3	ADX	10/94 ⇨ 04/97
POLO III 55 1.4	AEX, ANX	08/95 ⇨ 10/99
POLO III 60 1.4	AEX, AKV, APQ	07/95 ⇨ 09/01
POLO III 75 1.6	1F, AEA, AEE, AHS, ALM	10/94 ⇨ 10/99
POLO III 90 1.8	ADD	01/97 ⇨ 09/01
POLO IV 1.0	AER	08/96 ⇨ 12/01
SHARAN I 2.0	ADY	09/95 ⇨ 03/10
TRANSPORTER IV 2.0	AAC	07/90 ⇨ 04/03
TRANSPORTER IV 2.5	AAF, ACU, AET, AEU, APL, AVT	09/90 ⇨ 06/03
TRANSPORTER IV 2.5 Syncro	AAF, ACU, AET, AEU, APL, AVT	08/92 ⇨ 04/03
VENTO 1.4	ABD, AEX, APQ	11/91 ⇨ 09/98
VENTO 1.6	ABU, AEA, AEE, AEK, AFT, AKS	09/92 ⇨ 02/99
VENTO 1.8	AAM, ABS, ADZ, ANP	11/91 ⇨ 02/99
VENTO 2.0	2E, ADY, AGG, AKR	11/91 ⇨ 09/98
VENTO 2.0 GL	AEP	05/96 ⇨ 12/97

FACET 9.8116 — 07

COILS

Adatt./Suitable:

BOSCH
0 986 221 002

SEAT
701 905 104 A

TELEFUNKEN
310 481

VW
701 905 104 A

[00] **Eliminated on 23-02-2022. Please verify the availability through our local distributors**

- Eliminato il 23-02-2022. Verificare la disponibilità presso i nostri distributori
- Eliminé le 23-02-2022. Verifier la disponibilité auprès de nos distributeurs sur place
- Am 23-02-2022 gestrichen. Evtl. Verfügbarkeit bitte bei unseren Händlern prüfen
- Eliminado en fecha 23-02-2022. Verificar la disponibilidad a través de nuestros distribuidores locales

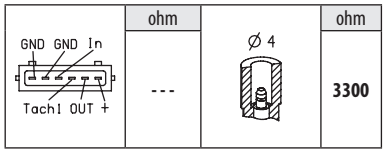

SEAT		
CORDOBA I 1.3	8C20HD0D	02/93 ⇨ 08/94
IBIZA II 1.3 i	8C20HD0D	03/93 ⇨ 08/99
TOLEDO I 1.8 i	ADZ	11/93 ⇨ 12/96
TOLEDO I 2.0 i	AGG	05/91 ⇨ 03/99
VW		
POLO II 1.0	HZ	01/85 ⇨ 09/94
POLO II 1.0 Cat	ACM	08/89 ⇨ 09/94
POLO II 1.3 Cat	2G, MH, NZ	07/87 ⇨ 09/94
PASSAT III 1.6	1F, ABN, EZ	04/88 ⇨ 07/92
PASSAT III 1.8	AAM, RP	02/88 ⇨ 05/97
TRANSPORTER IV 1.8	5K7M710	12/90 ⇨ 07/92

FACET **9.8120** 07

COILS

Adatt./Suitable:

AUDI
032 905 106
032 905 106 B
032 905 106 D
032 905 106 E
032 905 106 F

BOSCH
0 221 603 010
0 986 221 048
F 000 ZS0 210

HITACHI
138425
138704
2508425
2508704

MAGNETI MARELLI
060717041012
060717042012

SEAT
032 905 106
032 905 106 B
032 905 106 D
032 905 106 E
032 905 106 F

SKODA
032 905 106
032 905 106 B
032 905 106 D
032 905 106 E
032 905 106 F

TELEFUNKEN
311 740

VW
032 905 106
032 905 106 B
032 905 106 D
032 905 106 E
032 905 106 F
06B 905 106 A

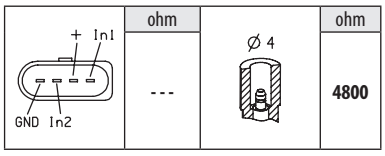

AUDI		
A1 1.2 TFSI	CBZA	05/10 ⇨ 04/15
A2 1.4	AUA	02/00 ⇨ 08/05
A3 I 1.6	AEH, AKL, APF, AVU, BFQ	08/00 ⇨ 05/03
A3 I 1.8	AGN, APG	09/96 ⇨ 05/03
A3 II 1.2 TFSI	CBZB	03/10 ⇨ 05/13
A3 II 1.2 TSI	CBZB	04/10 ⇨ 03/13
A3 II 1.6	BGU, BSE, BSF, CCSA	05/03 ⇨ 03/13
A3 II 1.6 E-Power	CCSA, CMXA	01/11 ⇨ 03/13
A4 II 1.6	ALZ	11/00 ⇨ 12/04
A4 I 1.6	AHL, ALZ, ANA, ARM	07/00 ⇨ 09/01
A4 III 1.6	ALZ	11/04 ⇨ 06/08
SEAT		
ALHAMBRA I / II 2.0	ATM	03/96 ⇨ 03/10
ALHAMBRA I / II 2.0 i	ATM	04/96 ⇨ 03/10
ALTEA 1.2 TSI	CBZB	04/10 ⇨
ALTEA 1.6	BGU, BSE, BSF, CCSA	03/04 ⇨
ALTEA 1.6 LPG	CHGA	09/09 ⇨
ALTEA 1.6 Multifuel	CMXA	11/10 ⇨ 05/11
ALTEA XL 1.2 TSI	CBZB	04/10 ⇨
ALTEA XL 1.6	BGU, BSE, BSF, CCSA	10/06 ⇨
ALTEA XL 1.6 LPG	CHGA	09/09 ⇨
ALTEA XL 1.6 Multifuel	BSE, BSF, CCSA, CMXA	10/06 ⇨ 11/10
AROSA 1.0	ALD, ANV, AUC	05/97 ⇨ 06/04
AROSA 1.4	AKK, ANW, AUD	05/97 ⇨ 06/04
AROSA 1.4 16V	AFK, AQQ, AUB	01/00 ⇨ 06/04
CORDOBA I 1.4 16V	2CJXE, AUA	06/99 ⇨ 12/02
CORDOBA I 1.6 i	AKL	07/96 ⇨ 10/02
EXEO 1.6	ALZ	03/09 ⇨ 09/10
EXEO 1.8 T	CFMA	12/08 ⇨ 05/10
IBIZA II 1.0 i	AUC	09/96 ⇨ 02/02
SEAT		
IBIZA II 1.4 16V	2CJXE, AUA	05/00 ⇨ 02/02
IBIZA II 1.4 i	AUD	09/93 ⇨ 02/02
IBIZA II 1.4 i 16V	AQQ	06/97 ⇨ 02/02
IBIZA II 1.6 i	AKL	04/96 ⇨ 02/02
IBIZA III 1.4 16V	AUB	02/02 ⇨ 11/09
IBIZA III 1.6	BAH	02/03 ⇨ 11/09
IBIZA III 2.0	AZL, BBX	04/02 ⇨ 11/09
CORDOBA II 1.6	BAH	04/03 ⇨ 11/09
CORDOBA II 2.0	AZL, BBX	09/02 ⇨ 11/09
IBIZA IV 1.2 TSI	CBZA, CBZB	09/10 ⇨ 05/15
IBIZA IV 2.0	CEKA	10/08 ⇨ 05/15
INCA 1.4 16V	AUA	04/00 ⇨ 06/03
INCA 1.4 i	AUD	11/95 ⇨ 06/03
LEON I 1.4 16V	2CJXE, AHW, AXP	11/99 ⇨ 06/06
LEON I 1.6	AEH, AKL, BFQ	10/05 ⇨ 06/06
LEON I 1.6 16 V	AUS	09/00 ⇨ 06/06
LEON I 1.8 20V	AGN, APG	11/99 ⇨ 06/06
LEON II 1.2 TSI	CBZB	02/10 ⇨ 12/12
LEON II 1.6	BSE, BSF, CCSA	07/05 ⇨ 12/12
LEON II 1.6 LPG	CHGA	12/09 ⇨ 12/12
LEON II 1.6 MultiFuel	BSE, CCSA, CMXA	07/05 ⇨ 08/13
TOLEDO II 1.4 16V	2CJXE, AHW, AXP	01/00 ⇨ 05/02
TOLEDO II 1.6	AEH, AKL, APF	10/98 ⇨ 07/04
TOLEDO II 1.6 16V	AUS	06/00 ⇨ 05/06
TOLEDO II 1.8 20V	AGN, APG	10/98 ⇨ 07/04
TOLEDO III 1.6	BGU, BSE, BSF, CCSA	10/04 ⇨ 05/09
TOLEDO IV 1.2 TSI	CBZA, CBZB	07/12 ⇨ 06/15
SKODA		
FABIA I 1.4 16V	AUA, AUB, BBY, BBZ	10/99 ⇨ 03/08
FABIA I 2.0	AZL	12/99 ⇨ 03/08
SUPERB I 2.0	AZM	12/01 ⇨ 03/08
OCTAVIA I 1.4 16V	AXP	08/00 ⇨ 12/10
OCTAVIA I 1.6	AEH, AKL, AVU, BFQ	09/00 ⇨ 12/10
OCTAVIA I 1.8	AGN	09/96 ⇨ 07/00
OCTAVIA I 1.8 20V	AGN	07/98 ⇨ 07/00
OCTAVIA I 2.0	AEG, APK, AQY	04/99 ⇨ 05/07
OCTAVIA I 2.0 4x4	AZH	08/00 ⇨ 09/04
OCTAVIA II 1.2 TSI	CBZB	02/10 ⇨ 06/13
OCTAVIA II 1.6	BGU, BSE, BSF, CCSA, CMXA	06/04 ⇨ 06/13
OCTAVIA II 1.6 LPG	BSE, CHGA	08/09 ⇨ 11/12
OCTAVIA II 1.6 MultiFuel	CCSA	01/08 ⇨ 06/13
OCTAVIA II 2.0 [CHN]	BXX., CGZA.	04/07 ⇨
RAPID 1.2 LPG	CBZA	07/12 ⇨ 05/15
RAPID 1.2 TSI	CBZA, CBZB	07/12 ⇨ 05/15
ROOMSTER 1.2 TSI	CBZA, CBZB	03/10 ⇨ 05/15
FABIA II 1.2 TSI	CBZA, CBZB	03/10 ⇨ 12/14
YETI 1.2 TSI	CBZB	09/09 ⇨ 05/15
VOLKSWAGEN (BR)		
GOL 1.0i 16v Turbo	512	06/00 ⇨
GOLF A4 1.6i	AKL	10/99 ⇨
GOLF A4 2.0i	APK	08/99 ⇨
PARATI 1.0i 16v Turbo	512	06/00 ⇨
POLO 1.6	BAH, BPA, CCRA	02/02 ⇨
POLO 2.0	BBX	05/02 ⇨
VW		
PASSAT IV 1.6	AHL, ALZ, ANA, ARM	10/96 ⇨ 05/05
PASSAT IV 2.0	AZM, BFF	11/00 ⇨ 05/05
PASSAT IV 2.0 [CHN]	BFF, BNL	06/03 ⇨
PASSAT IV 2.0 4motion	AZM	11/00 ⇨ 05/05
GOLF VI 1.2 TSI	CBZA, CBZB	11/08 ⇨
GOLF VI 1.2 TSi BlueMotion	CBZB	05/09 ⇨ 11/12
GOLF VI 1.6	BSE, BSF, CCSA, CMXA	10/08 ⇨
GOLF VI 1.6 BiFuel	BSF	03/09 ⇨
GOLF VI 1.6 MultiFuel	CCSA, CHGA, CMXA	10/08 ⇨
BEETLE 1.2 TSI	CBZB	07/11 ⇨ 07/19
BORA 1.4 16V	AHW, AKQ, APE, AXP	03/00 ⇨ 05/05
BORA 1.6	AEH, AKL, APF, AVU, BFQ	08/00 ⇨ 05/05
BORA 1.6 16V	ATN, AUS	02/00 ⇨ 05/05
BORA 1.8 4motion	AGN	02/99 ⇨ 05/05
BORA 2.0	APK, AQY, AZH	10/98 ⇨ 12/13
BORA 2.0 4motion	AZH	04/00 ⇨ 05/05
CADDY II 1.4	AUA	11/95 ⇨ 01/04
CADDY II 1.4 16V	AUA	08/00 ⇨ 01/04
CADDY II 60 1.4	AUD	11/95 ⇨ 01/04
GOLF V 1.2 TSI	CBZA, CBZB	11/09 ⇨ 12/13
GOLF V 1.6	BGU, BSE, BSF, CCSA, CHGA, CMXA	01/04 ⇨
GOLF V 1.6 BiFuel	CHGA	05/09 ⇨ 12/13
GOLF V 1.6 MultiFuel	CCSA, CMXA	10/07 ⇨ 12/13
GOLF V 2.0	BHY	01/05 ⇨ 11/08
CADDY III 1.2 TSI	CBZA, CBZB	09/10 ⇨ 05/15
CADDY III 1.6	BGU, BRY, BSE, BSF	04/04 ⇨ 05/15
CADDY III 1.6 BiFuel	CHGA	05/11 ⇨ 05/15
FOX 1.0	--, AQZ, BNX, CCNA	10/03 ⇨
FOX 1.0 Alcohol	BJE, BNX	10/03 ⇨
FOX 1.0 Total Flex	CCNA	03/08 ⇨
FOX 1.4	BKR	04/05 ⇨ 12/09
VW		
FOX 1.6	BAH, BLH, BPA, CCRA, CFZA	10/03 ⇨ 08/14
FOX 1.6 Alcohol	--	10/03 ⇨
FOX 1.6 Total Flex	BJA, BPA, CCRA	10/03 ⇨ 08/14
JETTA V 1.6	BSE, BSF, CCSA	09/04 ⇨ 10/10
JETTA V 1.6 [CHN]	BJG	01/05 ⇨
JETTA V 1.6 MultiFuel	CCSA	01/08 ⇨ 10/10
PASSAT V 1.6	BSE, BSF	05/05 ⇨ 11/10
GOLF IV 1.4	AXP	05/00 ⇨ 06/06
GOLF IV 1.4 16V	AHW, AKQ, APE, AXP	10/97 ⇨ 06/06
GOLF IV 1.6	AEH, AKL, APF, AUS, AVU, BFQ	05/00 ⇨ 06/06
GOLF IV 1.6 16V	ATN, AUS	02/00 ⇨ 06/06
GOLF IV 1.8	AGN	08/97 ⇨ 06/05
GOLF IV 1.8 4motion	AGN	05/98 ⇨ 06/06
GOLF IV 2.0	APK, AQY	07/98 ⇨ 06/06
GOLF IV 2.0 4motion	AZH	10/00 ⇨ 06/06
GOLF PLUS 1.2 TSi	CBZB	11/09 ⇨ 08/14
JETTA VI 1.2 TSI	CBZB	10/10 ⇨ 12/17
JETTA VI 2.0	CBPA	06/10 ⇨ 12/17
POLO IV 1.4	BLM	08/02 ⇨ 08/10
POLO IV 1.4 16V	AUA	10/01 ⇨ 05/08
POLO IV 1.6	BAH, BPA	08/02 ⇨
POLO IV 1.6 Flex	BPA	12/04 ⇨ 10/14
POLO IV 1.6 Total Flex	BPA	10/04 ⇨ 06/06
POLO IV 2.0	BBX	09/02 ⇨
LUPO 1.0	ALD, ANV, AUC	09/98 ⇨ 07/05
LUPO 1.4	AUD	10/00 ⇨ 07/05
LUPO 1.4 16V	AFK, AHW, AKQ, ANM, APE, AQQ, AUA, AUB	09/98 ⇨ 07/05
LUPO 1.6 GTI	AVY	09/00 ⇨ 07/05
POLO III 1.0	ALD, AUC	05/99 ⇨ 05/02
POLO III 1.4	AKK, AKP, ANW, AUA, AUD	05/97 ⇨ 09/01
POLO III 1.4 16V	AFK, AHW, APE, AUA, AUB	10/99 ⇨ 09/01
POLO III 1.6	AEH, AKL, APF, AUR	05/96 ⇨ 09/01
POLO III 1.6 16V GTI	ARC, AVY	10/99 ⇨ 09/01
POLO III 100 1.4 16V	AFK, AUB	04/96 ⇨ 10/99
POLO III 100 1.6	AEH, AKL, APF, AUR	12/95 ⇨ 09/01
POLO III 120 1.6 16V GTI	AJV	09/98 ⇨ 10/99
POLO III 50 1.0	ALD, AUC	09/96 ⇨ 10/99
POLO III 55 1.4	AKP	08/95 ⇨ 10/99
POLO III 60 1.4	AKK, ANW, AUD	07/95 ⇨ 09/01
POLO III 75 1.4 16V	APE, AUA	10/99 ⇨ 09/01
MULTIVAN 2.0	AXA	11/03 ⇨ 08/15
NEW BEETLE 1.6	AWH, AYD, BFS	06/00 ⇨ 09/10
NEW BEETLE 2.0	AEG, APK, AQY, BER	01/98 ⇨ 10/10
POLO V 1.2 TSi	CBZB, CBZC	11/09 ⇨
POLO V 1.2 TSi BlueMotion	CBZB	11/09 ⇨ 05/14
SHARAN I 2.0	ATM	09/95 ⇨ 03/10
SHARAN I 2.0 LPG	ATM	04/06 ⇨ 03/10
SPACEFOX / SPACE CROSS 1.6	BAH, BLH	03/06 ⇨
SPACEFOX / SPACE CROSS 1.6 FSI	BPA, CCRA, CFZA	03/06 ⇨
SPACEFOX / SPACE CROSS 1.6 Total Flex	BPA, CCRA, CFZA	03/06 ⇨
TOURAN I 1.2 TSI	CBZB	05/10 ⇨ 05/15
TOURAN I 1.6	BGU, BSE, BSF	07/03 ⇨ 05/10
TOURAN I 1.6 BiFuel	BSF	11/06 ⇨ 05/10
TOURAN I 2.0 FSI	BJZ	10/04 ⇨ 05/10
TOURAN I 2.0 TDI [CHN]	CGZA	04/09 ⇨
TRANSPORTER V 1.4 Brasile	BTJ	12/05 ⇨
TRANSPORTER V 2.0	AXA	11/03 ⇨ 08/15
TRANSPORTER V 2.0 BiFuel	AXA	05/11 ⇨ 08/15
TRANSPORTER V 2.0 CNG	AXACNG	11/03 ⇨ 08/15

FACET **9.8123** 07

COILS

Adatt./Suitable:

BOSCH
0 221 601 012

RENAULT
74 01 275 174

VOLVO
1275174

[00] **Eliminated on 12-01-2021. Please verify the availability through our local distributors**

- Eliminato il 12-01-2021. Verificare la disponibilità presso i nostri distributori
- Eliminé le 12-01-2021. Verifier la disponibilité auprès de nos distributeurs sur place
- Am 12-01-2021 gestrichen. Evtl. Verfügbarkeit bitte bei unseren Händlern prüfen
- Eliminado en fecha 12-01-2021. Verificar la disponibilidad a través de nuestros distribuidores locales

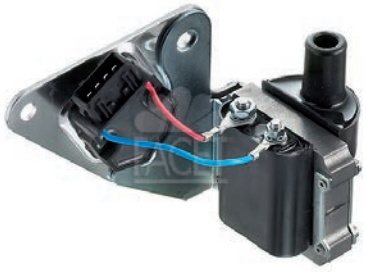

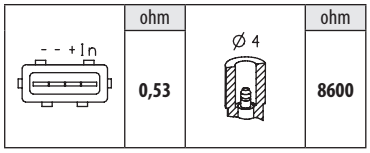

	ohm		ohm
	0,53		8600

RENAULT		
SAFRANE II 2.5 20V	N7U700, N7U701	07/96 ⇨ 12/00

VOLVO		
850 2.0	B5202S, B5204F, B5204FS	06/91 ⇨ 12/96
850 2.0 10V	B5202FS	08/94 ⇨ 12/97
850 2.0 Turbo	B5204FT, B5204T, B5204T2	02/93 ⇨ 10/97
850 2.3	B5234FS	01/96 ⇨ 10/96
850 2.3 T5	9M9T872	02/93 ⇨ 12/96
850 2.3 T5-R	B5234T4	08/95 ⇨ 12/96
850 2.3 Turbo R	B5234T5	06/95 ⇨ 10/97
850 2.4	B5252, B5252FS, B5254S	06/91 ⇨ 12/96
850 2.4 AWD	B5254T	04/96 ⇨ 12/96
850 2.4 GLE	B5254T	09/93 ⇨ 10/97
850 2.5 10V	B5252FS	06/91 ⇨ 12/97
850 2.5 20V	B5254FS	08/91 ⇨ 12/97
C70 I 2.0	B5204T2	03/97 ⇨ 10/05
C70 I 2.4 T	B5254T	03/98 ⇨ 10/05
S70 2.0	B5202FS, B5202S, B5204T2	01/97 ⇨ 11/00
S70 2.0 Turbo	B5204T2, B5204T3	01/97 ⇨ 11/00
S70 2.3	B5234FS, B5234T3	11/96 ⇨ 07/99
S70 2.3 AWD	B5234T7	04/99 ⇨ 09/00
S70 2.3 T-5	B5234T3	01/97 ⇨ 11/00
S70 2.3 T5 AWD	B5234T3, B5234T4	11/96 ⇨ 09/98
S70 2.3 T5-R AWD	B5234T2	11/96 ⇨ 09/98
S70 2.3 Turbo	B5234FT+, B5234T4	01/97 ⇨ 11/00
S70 2.4	B5252FS, B5254FS, B5254S	01/97 ⇨ 11/00
S70 2.4 AWD	B5252FS	11/96 ⇨ 05/99
S70 2.4 Bifuel	GB5252S	10/98 ⇨ 11/00
S70 2.4 T5 AWD	B5254T	11/96 ⇨ 04/99
S70 2.4 Turbo	B5254T	01/97 ⇨ 11/00
S70 2.5 20V	B5254FS	01/97 ⇨ 12/98
S70 2.5 Bifuel	GB5252S2	01/99 ⇨ 12/99
V70 I 2.0	B5202FS, B5202S, B5204T2	12/95 ⇨ 03/00
V70 I 2.0 Turbo	B5204T2, B5204T3	12/95 ⇨ 12/00
V70 I 2.0 Turbo AWD	B5204T3	11/96 ⇨ 12/00
V70 I 2.3	B5234FS, B5234T3	11/96 ⇨ 07/99
V70 I 2.3 AWD	B5234T3, B5234T7	04/97 ⇨ 09/98
V70 I 2.3 T AWD	B5234FT+, B5234T4, B5234T6	04/97 ⇨ 12/98
V70 I 2.3 T-5	B5234T3	11/96 ⇨ 12/00
V70 I 2.3 T-5 AWD	B5234T3	01/97 ⇨ 12/00
V70 I 2.3 Turbo	B5234FT+, B5234T2, B5234T4	12/95 ⇨ 12/98
V70 I 2.4	B5252FS, B5254S	12/95 ⇨ 12/99
V70 I 2.4 Bifuel	GB5252S	05/98 ⇨ 12/99
V70 I 2.4 Turbo	B5254T	04/96 ⇨ 12/00

VOLVO		
V70 I 2.4 Turbo AWD	B5254T	04/96 ⇨ 12/00
V70 I 2.5	B5252FS	01/97 ⇨ 03/00
V70 I 2.5 20V	B5254FS	01/97 ⇨ 12/99
V70 I 2.5 Bifuel	GB5252S2	01/99 ⇨ 12/99

CROSS REFERENCE LIST OEM/OES

FA-IGN22Q1

- TABELLA COMPARATIVA OEM/OES -TABLE DE COMPARAISON OEM/OES -VERGLEICHSTABELLE OEM/OES -TABLA DE EQUIVALENCIAS OEM/OES

MANUFACTURER
A
ABARTH
ACURA
ALFA ROMEO
ASTON MARTIN
AUDI
B
BENTLEY
BMW
BOSCH
C
CHEVROLET
CHRYSLER
CITROËN
CUPRA
D
DACIA
DAEWOO
DAF
DAIHATSU
DELPHI
DENSO
DS
DUCATI
E
EFI AUTOMOTIVE
F
FIAT
FIAT (YV)
FORD
FORD AUSTRALIA
FORD USA

MANUFACTURER
G
GENERAL MOTORS
H
HITACHI
HOLDEN
HONDA
HYUNDAI
I
INFINITI
INNOCENTI
ISUZU
IVECO
J
JAGUAR
JEEP
K
KIA
L
LADA
LANCIA
LAND ROVER
LEXUS
M
MARUTI
MASERATI
MAZDA
MERCEDES-BENZ
MG
MINI
MITSUBISHI
N
NISSAN

MANUFACTURER
O
OPEL
P
PEUGEOT
PIAGGIO
PORSCHE
PUCH
R
RELIANT
RENAULT
ROLLS-ROYCE
ROVER
S
SAAB
SEAT
SKODA
SMART
SOLO
SSANGYONG
STERLING
SUBARU
SUZUKI
T
TALBOT
TOYOTA
V
VALEO
VAUXHALL
VOLVO
VW
Y
YUGO

MANUFACTURER
Z
ZASTAVA

MANUFACTURER'S NAMES AND PART NUMBERS ARE QUOTED FOR REFERENCE PURPOSE ONLY.

- I nomi dei fabbricanti e i loro numeri sono menzionati unicamente per facilitare la ricerca della nostra corrispondente parte di ricambio.
- Les noms et références des fabricants sont mentionnées seulement pour faciliter la recherche de nos références.
- Die Namen und Teile-Nr. der Hersteller dienen nur zur Erleichterung bei der Suche unserer Teile-Nr.
- Los nombres des los fabricantes y sus codigos sirven únicamente para la individuación de nuestros productos.

CROSS REFERENCE LIST OEM/OES

FA-IGN22Q1

- TABELLA COMPARATIVA OEM/OES -TABLE DE COMPARAISON OEM/OES -VERGLEICHSTABELLE OEM/OES -TABLA DE EQUIVALENCIAS OEM/OES

AUDI

022 905 100 P	***9.6334***
022 905 715 B	***9.6334***
023 905 207	***2.7530/1PHT*** *A
026 905 207 A	***2.7668PHT***
026 905 209	***2.7529PHT***
026 905 225	***3.7573/16RS***
026 905 225 K	***3.7699RS***
027 905 207	***2.7494PHT***
027 905 207 A	***2.7530/36PHT***
030 905 065	***8.2723***
030 905 065 B	***8.2723***
030 905 207	***2.7494PHT***
032 905 106	***9.8120***
032 905 106 B	***9.8120***
032 905 106 D	***9.8120***
032 905 106 E	***9.8120***
032 905 106 F	***9.8120***
034 905 207 B	***2.7530/1PHT*** *A
034 998 065	***8.2719***
035 905 105 A	***9.6026***
035 905 207 A	***2.7493PHT***
035 905 225	***3.7573/16RS***
035 905 225 B	***3.7555RS***
035 905 225 C	***3.7559RS***
036 905 715 A	***9.6374***
036 905 715 F	***9.6374***
036 905 715 G	***9.6374***
043 905 207	***2.7479PHT***
051 905 207	***2.7530/36PHT***
051 905 225	***3.7573/21RS***
052 905 225 C	***3.7573/21RS***

2.7530/1PHT

04

DISTRIBUTOR CAPS

Adatt./Suitable: ***BOSCH***

AUDI
023 905 207 *A
034 905 207 B *A

BOSCH
0 290 004 032 *A
0 290 004 035 *A
1 235 522 369
1 235 522 371
1 235 522 385 *A
1 235 522 404
1 235 522 405 *A

VW
023 905 207 *A
034 905 207 *A
034 905 207 A *A
034 905 207 B *A
035 905 209 B

*A **without cover**
- senza copertura
- sans revêtement
- ohne Abdeckung
- sin cubierta

AUDI		
80 II 2.0	HP, JS	10/83 ⇨ 09/84
80 II 2.0 quattro	JS	10/83 ⇨ 09/84
80 IV 2.3 E	NG	09/91 ⇨ 01/96
80 IV 2.3 E quattro	NG	09/91 ⇨ 11/94
90 I 2.0	HP, JL, JS, SK	10/84 ⇨ 03/87
90 I 2.0 quattro	JS	08/84 ⇨ 08/86
90 I 2.2	HY, KV, KX	10/84 ⇨ 03/87
90 I 2.2 E quattro	KV	11/84 ⇨ 03/87
90 II 2.0	PS	07/88 ⇨ 09/91
90 II 2.0 20 V quattro	NM	08/88 ⇨ 09/91
90 II 2.2 E	KV	04/87 ⇨ 07/91
90 II 2.2 E quattro	KV	04/87 ⇨ 09/91
90 II 2.3 E	NG	04/87 ⇨ 09/91
90 II 2.3 E 20V quattro	7A	06/88 ⇨ 09/91
90 II 2.3 E quattro	NG	04/87 ⇨ 09/91
100 III 2.0	KP	08/84 ⇨ 12/87
100 III 2.0 Cat	RT	01/88 ⇨ 11/90
100 III 2.0 E	KP	01/85 ⇨ 12/87
100 III 2.0 E Cat	RT	01/88 ⇨ 11/90
100 III 2.2 Cat	KU	06/89 ⇨ 11/90
100 III 2.2 Cat quattro	KU	06/89 ⇨ 11/90
100 III 2.2 E Turbo quattro	MC	08/86 ⇨ 11/90
100 III 2.2 Turbo	MC	08/86 ⇨ 11/90
100 III 2.3	NF	08/86 ⇨ 11/90
100 III 2.3 E	NF	10/86 ⇨ 11/90
100 III 2.3 E quattro	NF	08/86 ⇨ 11/90
100 III 2.3 quattro	NF	01/90 ⇨ 11/90
100 IV 2.3 E	AAR	12/90 ⇨ 07/94
100 IV 2.3 E quattro	AAR	12/90 ⇨ 07/94
200 II 2.2	KU	08/84 ⇨ 07/85
200 II 2.2 Turbo	1B, MC	08/85 ⇨ 09/91

ABARTH

46777288	9.6342
55224110	9.6449
55229959	9.6449
55246099	9.6342
9937767	3.8254RS
9939762	8.4961/1

ACURA

06302-PT2-000	9.4052
06302-PT2-A00	9.4052
30102-P54-006	2.7968
30102-PM5-A02	2.7969
30102-PT2-006	2.7968
30102-PV1-A05	2.7984
30103-P08-003	3.7995
30103-PAI-732	3.7956
30103-PM5-A04	3.7982
30103-PW0-G02	3.7997RS
30500-PE0-006	9.6112
30500-PM5-A02	9.6113
30500-PR4-A02	9.6115
30510-P73-A01	9.6114
30510-PT2-006	9.6114

ALFA ROMEO

510 897	9.6001D
700 216	2.7479PHT
700 218	3.7512RS
700 220	1.2534HDVS
700 291	2.7649PHT
700 295	3.7691
700 299	0.0334
701 707	0.0617
705 390	3.8251RS
705 410	2.7479PHT
705 420	8.2653
705 559	2.7654PHT
105 02 05 011 00/03	1.4927
105 48 05 011 00/01	3.7512RS
105 48 05 011 04/03	1.4939
105 48 05 011 06/01	2.7476PHT
105 48 05 011 08/02	2.7479PHT
115 44 05 011 00/02	3.7555RS
115 48 05 089 00	4.8716
116 34 05 011 00/03	1.4939
116 36 05 011 01/01	3.7525RS
116 42 65 079 00	9.6001D
116 55 05 011 00/02	2.7479PHT
116 55 05 011 01/01	3.8242RS
116 55 05 011 01/09	0.0617
116 55 05 011 03/01	3.7683RS
116 55 05 011 03/02	1.3655
116 55 05 011 03/04	0.0323
116 58 05 011 00/02	3.8254RS
116 69 05 011 00/02	3.7573/13RS
116 97 05 011 00/04	3.7561RS
119 00 05 011 04/02	2.7481PHT
119 11 05 011 00/02	3.7524RS
130 85 50 06/07	2.7462
140 20 05 011 00/01	1.2534HDVS
140 20 05 011 00/03	3.7512RS
165 55 05 011 00/02	2.7479PHT
195 05 05 011 02/01	3.7573/21RS
195 17 05 011 00/02	3.7573/21RS
195 32 05 021 00/00	2.7530/6PHT*A
195 32 05 023 00/00	3.7573/19RS
46337742	9.6449
46469863	9.6287
46469919	4.9608
46469920	4.9608
46548037	9.6046
46755605	9.6297

ALFA ROMEO

46755606	4.9607
46756506	4.9608
46777288	9.6342
46786044	4.9608
55200112	9.6323
55208723	9.6323
55214926	9.6449
55224110	9.6449
55229959	9.6449
55246099	9.6342
55263679	9.6449
55267630	9.6449
55270217	9.6449
60513050	2.7530/6PHT*A
60513052	3.7573/19RS
60522981	4.8716
60534261	8.2733*S
60534855	4.8660
60558152	9.6068
60562701	9.6213
60566481	4.8623
60566483	4.8623
60567866	4.8666
60569567	4.8716
60573030	4.8660
60573733	4.8666
60586072	9.6068
60605306	9.6286K*1
60710643	1.4927
60714274	1.4939
60714282	2.7476PHT
60714284	2.7479PHT
60723008	3.7555RS
60727364	1.4939
60730437	3.8242RS
60730444	0.0617
60730445	1.3655
60731801	3.8254RS
60732287	3.7573/13RS
60735405	2.7481PHT
60735860	3.7524RS
60739126	1.2534HDVS
60739128	3.7512RS
60743670	3.7573/21RS
60743768	3.7573/21RS
60744199	9.6001D
60748373	2.7649PHT
60748377	3.7691
60748381	0.0334
60749285	0.0617
60749769	3.8251RS
60749869	2.7654PHT
60750065	9.4005
60752000	3.7555RS
60755007	3.7561RS
60755091	3.7573/23RS
60801306	2.7479PHT
60805420	9.6046
60809492	9.6046
60809606	9.6068
60810690	9.6213
71711984	9.6286
71713719	4.9607
71713719	4.9608
71739725	9.6350
71744369	9.6350
71779115	9.6350
7789742	4.9608
7789743	4.9608
7793212	9.6286
82305237	2.7479PHT
96586846	2.7479PHT
9916117	3.7683RS
9927967	3.7525RS
9938173	3.8255RS
9938953	8.2653

ALFA ROMEO

9940437	3.7561RS
9950021	3.7525RS
9950047	3.8255RS
9950051	2.8198PHT
9950055	8.2653
9950142	3.8259
9950152	0.0334
9950519	2.8215PHT

ASTON MARTIN

9091902257	9.6437

AUDI

022 905 100 P	9.6334
022 905 715 B	9.6334
022 905 715 D	9.6334
023 905 207	2.7530/1PHT*A
026 905 207 A	2.7668PHT
026 905 209	2.7529PHT
026 905 225	3.7573/16RS
026 905 225 K	3.7699RS
027 905 207	2.7494PHT
027 905 207 A	2.7530/36PHT
030 905 065	8.2723
030 905 065 B	8.2723
030 905 207	2.7494PHT
032 905 106	9.8120
032 905 106 B	9.8120
032 905 106 D	9.8120
032 905 106 E	9.8120
032 905 106 F	9.8120
034 905 207 B	2.7530/1PHT*A
034 998 065	8.2719
035 905 105 A	9.6026
035 905 207 A	2.7493PHT
035 905 225	3.7573/16RS
035 905 225 B	3.7555RS
035 905 225 C	3.7559RS
036 905 100 A	9.6374
036 905 100 B	9.6374
036 905 100 C	9.6374
036 905 100 D	9.6374
036 905 715	9.6374
036 905 715 A	9.6374
036 905 715 C	9.6374
036 905 715 E	9.6374
036 905 715 F	9.6374
036 905 715 G	9.6374
036 905 715 H	9.6374
043 905 207	2.7479PHT
04C 905 110 D	9.6499
04C 905 110 E	9.6499
04C 905 110 H	9.6499
04C 905 110 J	9.6499
04C 905 110 L	9.6499
04E 905 110 B	9.6499
04E 905 110 D	9.6499
04E 905 110 E	9.6499
04E 905 110 K	9.6499
04E 905 110 M	9.6499
04E 905 110 P	9.6499
051 905 207	2.7530/36PHT
051 905 225	3.7573/21RS
052 905 225 C	3.7573/21RS
055 905 225 B	3.7555RS
058 905 101	9.6254S
058 905 105	9.6254S
06A 905 115	9.6329
06A 905 115 A	9.6329
06A 905 115 B	9.6329
06A 905 115 C	9.6329

AUDI

06A 905 115 D	9.6329
06B 905 115	9.6345
06B 905 115 B	9.6345
06B 905 115 D	9.6329
06B 905 115 E	9.6345
06B 905 115 G	9.6329
06B 905 115 H	9.6329
06B 905 115 J	9.6329
06B 905 115 L	9.6329
06B 905 115 M	9.6329
06B 905 115 N	9.6329
06B 905 115 P	9.6329
06B 905 115 Q	9.6329
06B 905 115 R	9.6329
06B 905 115 S	9.6329
06C 905 115 A	9.6336
06C 905 115 B	9.6336
06C 905 115 C	9.6329
06C 905 115 D	9.6336
06C 905 115 E	9.6336
06C 905 115 F	9.6336
06C 905 115 G	9.6336
06C 905 115 H	9.6336
06C 905 115 J	9.6336
06C 905 115 K	9.6336
06C 905 115 L	9.6336
06C 905 115 M	9.6336
06D 905 115	9.6327
06D 905 115 A	9.6327
06D 905 115 C	9.6327
06D 905 115 D	9.6327
06D 905 115 F	9.6327
06D 905 115 G	9.6327
06D 905 115 J	9.6327
06D 905 115 K	9.6327
06E 905 115	9.6327
06E 905 115 A	9.6327
06E 905 115 B	9.6327
06E 905 115 C	9.6327
06E 905 115 D	9.6327
06E 905 115 E	9.6327
06E 905 115 F	9.6327
06E 905 115 G	9.6327
06F 905 115 C	9.6326
06F 905 115 E	9.6326
06F 905 115 F	9.6326
06H 905 110 D	9.6536
06H 905 110 E	9.6536
06H 905 110 F	9.6536
06H 905 110 G	9.6536
06H 905 110 H	9.6536
06H 905 110 L	9.6536
06H 905 115	9.6326
06H 905 115 A	9.6326
06H 905 115 B	9.6326
06K 905 110 K	9.6536
06L 905 110 C	9.6536
06L 905 110 D	9.6536
06L 905 110 E	9.6536
06L 905 110 F	9.6536
06L 905 110 H	9.6536
06L 905 110 K	9.6536
077 905 115 B	9.6333
077 905 115 C	9.6333
077 905 115 E	9.6333
077 905 115 F	9.6333
077 905 115 H	9.6333
077 905 115 K	9.6333
077 905 115 P	9.6333
077 905 115 Q	9.6333
077 905 115 T	9.6333
077 905 205	2.7530/18PHT*A
077 905 207	2.7530/18PHT*A
07K 905 715 A	9.6326
07K 905 715 C	9.6326
07K 905 715 D	9.6326

AUDI

07K 905 715 F	9.6326
07K 905 715 G	9.6326
07L 905 115	9.6327
07L 905 115 A	9.6327
07L 905 115 B	9.6327
191 905 351 B	9.4007
211 905 115 B	9.6032
211 905 115 D	9.6025
211 905 351	9.4004
251 905 115 A	9.6025
4A0 905 351	9.4051
4D0 905 351	9.4076
6N0 905 104	9.8114
811 905 115	9.6027
867 905 352	9.8114
8D0 905 351	9.4072

BENTLEY

06H 905 110 G	9.6536
06H 905 110 L	9.6536

BMW

1 317 232	9.6062S
1 703 227	9.6252
1 703 359	9.6062S
1 703 360	9.6062S
1 715 903	2.7530/8PHT
1 720 166	9.6012
1 720 877	9.6012
1 726 177	9.6062S
1 727 108	9.6062S
1 730 520	9.6062S
1 730 766	9.6062S
1 734 468	9.6062S
1 748 017	9.6252
1 748 018	9.6252
12 11 1 243 843	1.2534HDVS
12 11 1 267 391	1.2534HDVS
12 11 1 267 392	1.2562
12 11 1 267 393	1.2534HDVS
12 11 1 267 394	1.2549HDVS
12 11 1 267 464	3.7524RS
12 11 1 271 656	2.7462
12 11 1 271 657	2.7481PHT
12 11 1 271 687	1.2562
12 11 1 272 144	3.7555RS
12 11 1 272 300	3.7561RS
12 11 1 276 277	3.7573/12RS
12 11 1 284 372	2.7521PHT
12 11 1 284 446	3.7573/19RS
12 11 1 285 058	2.7530/8PHT*A
12 11 1 286 110	3.7573/15RS
12 11 1 286 111	3.7573/12RS
12 11 1 289 425	2.7530/17PHT
12 11 1 289 519	2.7521PHT
12 11 1 304 909	3.7573/17RS
12 11 1 326 765	2.7494PHT
12 11 1 328 430	3.7573/17RS
12 11 1 351 446	2.7472PHT
12 11 1 351 447	3.7512RS
12 11 1 353 117	2.7472PHT
12 11 1 354 449	2.7479PHT
12 11 1 354 499	2.7462
12 11 1 354 501	2.7472PHT
12 11 1 354 502	1.2534HDVS
12 11 1 354 503	3.7512RS
12 11 1 354 584	1.2549HDVS
12 11 1 354 999	2.7462
12 11 1 355 211	3.7527RS
12 11 1 355 624	1.2562
12 11 1 355 626	2.7481PHT

BMW

12 11 1 356 919	1.2549HDVS
12 11 1 357 720	3.7573/15RS
12 11 1 359 704	0.0179/112
12 11 1 359 705	1.2534HDVS
12 11 1 359 706	2.7481PHT
12 11 1 359 873	1.2534HDVS
12 11 1 359 874	2.7479PHT
12 11 1 360 305	3.7527RS
12 11 1 360 306	3.7524RS
12 11 1 360 648	1.2534HDVS
12 11 1 361 760	1.2534HDVS
12 11 1 362 221	3.7527RS
12 11 1 363 191	2.7479PHT
12 11 1 363 291	2.7479PHT
12 11 1 363 292	2.7481PHT
12 11 1 363 422	2.7481PHT
12 11 1 363 423	2.7479PHT
12 11 1 706 122	2.7494PHT
12 11 1 707 263	3.7560RS
12 11 1 710 735	3.7573/15RS
12 11 1 720 124	2.7530/8PHT
12 11 1 722 649	2.7530/8PHT
12 11 1 725 070	2.7530/8PHT
12 11 1 734 109	2.7530/17PHT*A
12 11 1 734 110	3.7573/19RS
12 11 8 630 144	3.7512RS
12 11 8 630 146	2.7462
12 11 8 730 024	1.2534HDVS
12 11 8 730 055	2.7462
12 12 1 247 362	4.8900
12 12 1 247 363	4.8900
12 12 1 247 364	4.8900
12 12 1 247 365	4.8900
12 12 1 247 511	4.9921
12 12 1 247 512	4.9921
12 12 1 247 513	4.9921
12 12 1 247 514	4.9921
12 12 1 247 523	4.9921
12 12 1 247 524	4.9921
12 12 1 247 525	4.9921
12 12 1 247 526	4.9921
12 12 1 355 211	3.7527RS
12 12 1 705 697	4.8572
12 12 1 709 206	4.7069
12 12 1 709 207	4.7069
12 12 1 709 208	4.7069
12 12 1 709 209	4.7069
12 12 1 717 646	4.8573
12 12 1 720 529	4.8587
12 12 1 722 253	4.8578
12 12 1 726 037	4.8597
12 12 1 727 686	4.8573
12 12 1 727 855	4.8605
12 13 0 148 594	9.6375
12 13 0 390 064	9.6375
12 13 1 317 232	9.6062S
12 13 1 317 585	9.6062S
12 13 1 357 296	9.6001D
12 13 1 359 637	9.6001D
12 13 1 402 440	9.6062S
12 13 1 402 713	9.6062S
12 13 1 404 102	9.6062S
12 13 1 703 228	9.6252
12 13 1 703 359	9.6062S
12 13 1 703 825	9.6252
12 13 1 712 219	9.6375
12 13 1 712 223	9.6375
12 13 1 720 166	9.6012
12 13 1 720 877	9.6012
12 13 1 726 177	9.6062S
12 13 1 726 178	9.6062S
12 13 1 727 108	9.6062S
12 13 1 729 842	9.6062S
12 13 1 730 765	9.6062S
12 13 1 730 766	9.6062S
12 13 1 731 884	9.6062S

BMW

12 13 1 734 468	9.6062S
12 13 1 742 925	9.6012
12 13 1 748 017	9.6252
12 13 1 748 018	9.6252
12 13 1 748 394	9.6062S
12 13 1 748 395	9.6062S
12 13 5 A06 753	9.6375
12 13 7 523 345	9.6375
12 13 7 548 553	9.6375
12 13 7 550 012	9.6375
12 13 7 551 049	9.6375
12 13 7 551 260	9.6375
12 13 7 559 842	9.6507
12 13 7 562 744	9.6375
12 13 7 571 643	9.6375
12 13 7 571 644	9.6507
12 13 7 575 010	9.6375
12 13 7 582 627	9.6507
12 13 7 594 596	9.6375
12 13 7 594 935	9.6507
12 13 7 594 936	9.6375
12 13 7 594 937	9.6375
12 13 7 594 938	9.6375
12 13 7 599 218	9.6062S
12 13 7 599 219	9.6252
12 13 7 619 385	9.6532
12 13 7 638 477	9.6507
12 13 8 611 236	9.6375
12 13 8 615 991	9.6532
12 13 8 616 153	9.6375
12 13 8 643 360	9.6532
12 13 8 647 463	9.6532
12 13 8 647 689	9.6375
12 13 8 657 273	9.6375
12 13 8 678 438	9.6532
12 13 9 066 468	9.6062S
12 13 9 067 830	9.6252
12 14 1 244 089	9.4004
12 14 1 244 191	9.4004
12 14 1 244 477	9.4004
12 14 1 266 702	9.4005
12 14 1 273 217	9.4005
12 14 1 273 298	9.4005
12 14 1 274 698	9.4005
17 20 1 66.2	9.6012
5 575 010	9.6375
7 548 553	9.6375
7 551 049	9.6375
7 559 842	9.6507
7 571 643	9.6375
7 594 596	9.6375
7 594 935	9.6507
7 594 936	9.6375
7 599 218	9.6062S
7 599 219	9.6252
7 638 477	9.6507
8 611 236	9.6375
8 616 153	9.6375
8 643 360	9.6532
8 647 689	9.6375

BOSCH

0 221 102 088	9.6032
0 221 102 090	9.6001D
0 221 102 091	9.6001D
0 221 118 307	9.6080
0 221 118 329	9.6078
0 221 118 398	9.6026
0 221 119 008	9.6001D
0 221 119 018	9.6001D
0 221 119 025	9.6001D
0 221 119 027	9.6001D
0 221 119 035	9.6001D
0 221 119 048	9.6001D

BOSCH

0 221 122 008	9.6069
0 221 122 012	9.6003
0 221 122 022	9.6032
0 221 122 023	9.6032
0 221 122 031	9.6069
0 221 122 349	9.6025
0 221 122 350	9.6025
0 221 122 357	9.6026
0 221 122 358	9.6026
0 221 122 369	9.6094
0 221 122 379	9.6027
0 221 122 380	9.6027
0 221 122 386	9.6025
0 221 122 399	9.6026
0 221 122 400	9.6026
0 221 122 402	9.6091
0 221 122 403	9.6091
0 221 122 408	9.6092
0 221 122 409	9.6092
0 221 123 007	9.6001D
0 221 502 009	9.6012
0 221 502 431	9.6078
0 221 502 433	9.6079
0 221 503 001	9.6173
0 221 503 003	9.6089
0 221 503 004	9.6088
0 221 503 006	9.6089
0 221 503 011	9.6289
0 221 503 014	9.6298
0 221 503 022	9.6314
0 221 503 024	9.6089
0 221 503 025	9.6088
0 221 503 035	9.6317
0 221 503 036	9.6317
0 221 503 407	9.6068
0 221 503 457	9.6068
0 221 503 468	9.6407
0 221 503 471	9.6298
0 221 503 485	9.6381
0 221 503 486	9.6381
0 221 503 487	9.6381
0 221 503 491	9.6432
0 221 504 004	9.6252
0 221 504 006	9.6214
0 221 504 026	9.6449
0 221 504 029	9.6252
0 221 504 036	9.6449
0 221 504 100	9.6375
0 221 504 410	9.6312
0 221 504 456	9.6213
0 221 504 463	9.6375
0 221 504 467	9.6375
0 221 504 471	9.6507
0 221 504 472	9.6507
0 221 504 474	9.6312
0 221 505 437	9.6217
0 221 505 438	9.6217
0 221 506 002	9.6216
0 221 506 003	9.6216
0 221 506 444	9.6216
0 221 506 445	9.6216
0 221 601 012	9.8123
0 221 604 001	9.6348
0 221 604 008	9.6348
0 221 604 010	9.6378
0 221 604 014	9.6389
0 221 604 115	9.6326
0 221 604 116	9.6326
0 227 100 030	9.4076
0 227 100 100	9.4004
0 227 100 101	9.4004
0 227 100 102	9.4005
0 227 100 103	9.4004
0 227 100 104	9.4004
0 227 100 110	9.4005
0 227 100 111	9.4005

BOSCH	
0 227 100 112	9.4005
0 227 100 113	9.4004
0 227 100 118	9.4004
0 227 100 123	9.4005
0 227 100 124	9.4034
0 227 100 137	9.4004
0 227 100 138	9.4004
0 227 100 139	9.4004
0 227 100 142	9.4007
0 227 100 143	9.4007
0 227 100 147	9.4007
0 227 100 211	9.4076
0 227 100 212	9.4076
0 237 001 002	8.2653*N
0 237 001 005	8.2653*N
0 237 001 006	8.2653*N
0 237 001 007	8.2653*N
0 237 001 008	8.2653*N
0 237 002 001	8.2653*N
0 237 002 003	8.2653*N
0 237 002 004	8.2653*N
0 237 002 005	8.2653*N
0 237 002 006	8.2653*N
0 237 002 008	8.2653*N
0 237 002 010	8.2653*N
0 237 002 011	8.2653*N
0 237 002 012	8.2653*N
0 237 002 013	8.2653*N
0 237 002 015	8.2653*N
0 237 002 017	8.2653*N
0 237 002 018	8.2653*N
0 237 002 020	8.2653*N
0 237 002 021	8.2653*N
0 237 002 022	8.2653*N
0 237 002 035	8.2653*N
0 237 002 038	8.2653*N
0 237 002 039	8.2653*N
0 237 002 050	8.2653*N
0 237 002 053	8.2653*N
0 237 002 054	8.2653*N
0 237 002 057	8.2653*N
0 237 002 065	8.2653*N
0 237 002 069	8.2653*N
0 237 002 071	8.2653*N
0 237 002 072	8.2653*N
0 237 002 073	8.2653*N
0 237 002 075	8.2653*N
0 237 002 076	8.2653*N
0 237 002 078	8.2653*N
0 237 002 087	8.2653*N
0 237 002 088	8.2653*N
0 237 002 089	8.2653*N
0 237 002 109	8.2653*N
0 237 002 113	8.2653*N
0 237 002 114	8.2653*N
0 237 002 115	8.2653*N
0 237 002 128	8.2653*N
0 237 002 129	8.2653*N
0 237 002 133	8.2653*N
0 237 003 001	8.2653*N
0 237 003 003	8.2653*N
0 237 003 007	8.2653*N
0 237 003 008	8.2653*N
0 237 003 009	8.2653*N
0 237 003 018	8.2653*N
0 237 003 024	8.2653*N
0 237 003 027	8.2653*N
0 237 003 034	8.2653*N
0 237 003 035	8.2653*N
0 237 003 036	8.2653*N
0 237 003 040	8.2653*N
0 237 003 041	8.2653*N
0 237 003 042	8.2653*N
0 237 004 001	8.2653*N
0 237 004 002	8.2653*N
0 237 004 005	8.2653*N

BOSCH	
0 237 005 002	8.2653*N
0 237 005 004	8.2653*N
0 237 006 001	8.2653*N
0 237 006 003	8.2653*N
0 237 006 005	8.2653*N
0 237 006 006	8.2653*N
0 237 006 009	8.2653*N
0 237 006 010	8.2653*N
0 237 008 001	8.2653*N
0 237 008 002	8.2653*N
0 237 009 003	8.2653*N
0 237 009 010	8.2653*N
0 237 009 033	8.2653*N
0 237 011 003	8.2653*N
0 237 012 001	8.2653*N
0 237 012 002	8.2653*N
0 237 020 081	8.2659*N
0 237 020 083	8.2659*N
0 237 020 084	8.2659*N
0 237 020 085	8.2659*N
0 237 020 086	8.2659*N
0 237 020 087	8.2659*N
0 237 020 088	8.2659*N
0 237 020 089	8.2659*N
0 237 020 090	8.2659*N
0 237 020 091	8.2659*N
0 237 020 095	8.2659*N
0 237 020 096	8.2659*N
0 237 020 097	8.2659*N
0 237 020 098	8.2659*N
0 237 020 099	8.2659*N
0 237 020 100	8.2659*N
0 237 020 103	8.2659*N
0 237 020 105	8.2659*N
0 237 020 109	8.2659*N
0 237 020 110	8.2659*N
0 237 020 111	8.2659*N
0 237 020 112	8.2659*N
0 237 020 113	8.2659*N
0 237 020 114	8.2659*N
0 237 020 115	8.2659*N
0 237 020 116	8.2659*N
0 237 020 117	8.2659*N
0 237 020 118	8.2659*N
0 237 020 119	8.2659*N
0 237 020 120	8.2659*N
0 237 020 131	8.2659*N
0 237 020 133	8.2659*N
0 237 020 134	8.2659*N
0 237 020 135	8.2659*N
0 237 020 136	8.2659*N
0 237 020 137	8.2659*N
0 237 020 138	8.2659*N
0 237 020 140	8.2659*N
0 237 020 141	8.2659*N
0 237 020 144	8.2659*N
0 237 020 145	8.2659*N
0 237 020 146	8.2659*N
0 237 020 147	8.2659*N
0 237 020 148	8.2659*N
0 237 020 149	8.2659*N
0 237 020 150	8.2659*N
0 237 020 151	8.2659*N
0 237 020 152	8.2659*N
0 237 020 153	8.2659*N
0 237 020 154	8.2659*N
0 237 020 155	8.2659*N
0 237 020 156	8.2659*N
0 237 020 157	8.2659*N
0 237 020 158	8.2659*N
0 237 020 159	8.2659*N
0 237 020 160	8.2659*N
0 237 020 161	8.2659*N
0 237 020 162	8.2659*N
0 237 020 163	8.2659*N
0 237 020 164	8.2659*N

BOSCH	
0 237 020 165	8.2659*N
0 237 020 166	8.2659*N
0 237 020 167	8.2659*N
0 237 020 169	8.2659*N
0 237 020 170	8.2659*N
0 237 020 171	8.2659*N
0 237 020 172	8.2659*N
0 237 020 175	8.2659*N
0 237 020 176	8.2659*N
0 237 020 177	8.2659*N
0 237 020 178	8.2659*N
0 237 020 180	8.2659*N
0 237 020 182	8.2659*N
0 237 020 183	8.2659*N
0 237 020 184	8.2659*N
0 237 020 185	8.2659*N
0 237 020 186	8.2659*N
0 237 020 187	8.2659*N
0 237 020 188	8.2659*N
0 237 020 189	8.2659*N
0 237 020 190	8.2659*N
0 237 020 191	8.2659*N
0 237 020 192	8.2659*N
0 237 020 193	8.2659*N
0 237 020 194	8.2659*N
0 237 020 195	8.2659*N
0 237 020 196	8.2659*N
0 237 020 197	8.2659*N
0 237 020 198	8.2659*N
0 237 020 199	8.2659*N
0 237 020 200	8.2659*N
0 237 020 201	8.2659*N
0 237 020 202	8.2659*N
0 237 020 203	8.2659*N
0 237 020 204	8.2659*N
0 237 020 205	8.2659*N
0 237 020 212	8.2659*N
0 237 020 213	8.2659*N
0 237 021 026	8.2693*N
0 237 021 027	8.2693*N
0 237 021 028	8.2693*N
0 237 021 034	8.2693*N
0 237 021 035	8.2693*N
0 237 021 036	8.2693*N
0 237 021 040	8.2693*N
0 237 021 041	8.2693*N
0 237 021 042	8.2693*N
0 237 021 043	8.2693*N
0 237 021 044	8.2693*N
0 237 021 045	8.2693*N
0 237 021 046	8.2693*N
0 237 021 047	8.2693*N
0 237 021 048	8.2693*N
0 237 021 051	8.2693*N
0 237 021 052	8.2693*N
0 237 021 054	8.2693*N
0 237 021 056	8.2693*N
0 237 021 074	8.2734*N
0 237 022 035	8.2659*N
0 237 022 036	8.2659*N
0 237 022 037	8.2659*N
0 237 022 038	8.2659*N
0 237 022 039	8.2659*N
0 237 022 041	8.2659*N
0 237 022 043	8.2659*N
0 237 022 047	8.2659*N
0 237 022 049	8.2659*N
0 237 022 058	8.2659*N
0 237 022 060	8.2659*N
0 237 024 007	8.2659*N
0 237 024 008	8.2659*N
0 237 024 009	8.2659*N
0 237 024 010	8.2659*N
0 237 024 016	8.2659*N
0 237 024 017	8.2659*N
0 237 024 018	8.2659*N

BOSCH	
0 237 024 019	8.2659*N
0 237 024 022	8.2659*N
0 237 024 023	8.2659*N
0 237 024 024	8.2659*N
0 237 024 025	8.2659*N
0 237 024 027	8.2659*N
0 237 024 028	8.2659*N
0 237 024 029	8.2659*N
0 237 024 030	8.2659*N
0 237 024 031	8.2659*N
0 237 024 032	8.2659*N
0 237 024 033	8.2659*N
0 237 024 034	8.2659*N
0 237 024 037	8.2659*N
0 237 024 038	8.2659*N
0 237 026 013	8.2693*N
0 237 026 014	8.2693*N
0 237 035 001	8.2659*N
0 237 037 001	8.2693*N
0 237 037 002	8.2693*N
0 237 037 003	8.2693*N
0 237 037 004	8.2693*N
0 237 037 005	8.2693*N
0 237 037 007	8.2693*N
0 237 037 008	8.2693*N
0 237 037 009	8.2693*N
0 237 037 010	8.2693*N
0 237 505 005	8.2653*N
0 237 505 009	8.2653*N
0 237 520 001	8.2733*N
0 237 520 036	8.2723*N
0 237 520 037	8.2723*N
0 237 520 048	8.2723*N
0 237 520 054	8.2744*N
0 237 521 003	8.2733*N
0 237 521 006	8.2723*N
0 237 521 019	8.2733*N
0 237 521 020	8.2733*N
0 237 521 024	2.7530/26PHT*B
0 237 521 024	3.7573/21RS
0 237 521 024	8.2744
0 237 521 046	8.2733*N
0 237 521 047	8.2733*N
0 237 521 048	8.2723*N
0 237 521 050	8.2723*N
0 237 521 058	8.2723*N
0 237 522 011	8.2723*N
0 290 004 019	2.7530/36PHT
0 290 004 032	2.7530/1PHT*A
0 290 004 035	2.7530/1PHT*A
0 290 004 500	2.7490PHT*A
0 290 004 501	2.7492PHT*A
0 290 004 502	2.7490PHT*A
0 290 004 503	2.7492PHT
0 290 004 505	2.7490PHT
0 356 100 107	4.9607
0 356 100 107	4.9608
0 356 901 808	4.8572
0 356 901 814	4.8578
0 356 901 819	4.8597
0 356 912 052	4.9649
0 356 912 054	4.9649
0 356 912 948	4.9649
0 356 912 950	4.9649
0 356 912 975	4.9643
0 356 913 006	4.7232
0 356 913 008	4.7232
0 356 913 013	4.7234
0 356 913 017	4.7234
0 356 913 019	4.7234
0 356 913 021	4.7232
0 356 913 023	4.7232
0 986 221 003	9.6245
0 986 221 011	9.6254S
0 986 221 025	9.6276
0 986 221 026	9.6278

BOSCH	
0 986 221 027	9.6008
0 986 221 029	9.6055
0 986 221 030	9.6255
0 986 221 031	9.6256
0 986 221 033	9.6096
0 986 221 034	9.6303
0 986 356 345	4.7223
1 217 013 001	1.2560
1 217 013 002	1.2560
1 217 013 003	1.2560
1 217 013 006	1.2560
1 217 013 009	1.2564
1 217 013 015	1.2560
1 217 013 020	1.2583
1 217 013 021	1.2568
1 217 013 022	1.2568
1 217 013 025	1.2583
1 217 013 103	1.2560
1 217 031 015	1.2568
1 220 522 019	9.6092
1 221 122 409	9.6092
1 227 010 003	9.4034
1 227 010 039	9.4034
1 227 020 029	9.6091
1 227 022 008	9.4004
1 227 022 030	9.8114
1 227 030 030	9.8114
1 227 030 051	9.6169
1 227 030 052	9.6169
1 227 030 059	9.6286
1 227 030 062	9.6287
1 227 030 071	9.6297
1 230 500 221	8.2660
1 230 591 003	2.7480PHT
1 230 591 040	2.7530/36PHT
1 234 211 018	8.2653
1 234 211 218	8.2653
1 234 332 024	3.7518RS
1 234 332 029	3.7518RS
1 234 332 030	3.7518RS
1 234 332 033	3.7512RS
1 234 332 062	3.7518RS
1 234 332 072	3.7518RS
1 234 332 074	3.7512RS
1 234 332 076	3.7514RS
1 234 332 082	3.7514RS
1 234 332 087	3.7518RS
1 234 332 088	3.7518RS
1 234 332 089	3.7514RS
1 234 332 106	3.7521RS
1 234 332 107	3.7521RS
1 234 332 109	3.7521RS
1 234 332 144	3.7567RS
1 234 332 158	3.7567RS
1 234 332 162	3.7567RS
1 234 332 173	3.7524RS
1 234 332 177	3.7523RS
1 234 332 197	3.7524RS
1 234 332 200	3.7573/13RS
1 234 332 204	3.7534RS
1 234 332 208	3.7527RS
1 234 332 209	3.7567RS
1 234 332 213	3.7525RS
1 234 332 215	3.7525RS
1 234 332 216	3.7526RS
1 234 332 220	3.7573/15RS
1 234 332 236	3.7524RS
1 234 332 237	3.7524RS
1 234 332 242	3.7573/16RS
1 234 332 261	3.7525RS
1 234 332 271	3.7561RS
1 234 332 272	3.7573/17RS
1 234 332 273	3.7556RS
1 234 332 275	3.7561RS
1 234 332 276	3.7573/12RS
1 234 332 277	3.7573/17RS

BOSCH	
1 234 332 279	3.7560RS
1 234 332 280	3.7527RS
1 234 332 281	3.7573/15RS
1 234 332 282	3.7549RS
1 234 332 284	3.7573/17RS
1 234 332 285	3.7526RS
1 234 332 288	3.7573/15RS
1 234 332 291	3.7567RS
1 234 332 296	3.7560RS
1 234 332 300	3.7555RS
1 234 332 301	3.7555RS
1 234 332 303	3.7567RS
1 234 332 305	3.7559RS
1 234 332 309	3.7555RS
1 234 332 313	3.7573/12RS
1 234 332 317	3.7573/17RS
1 234 332 332	3.7524RS
1 234 332 333	3.7570RS
1 234 332 337	3.7549RS
1 234 332 340	3.7573/14RS
1 234 332 341	3.7573/22RS
1 234 332 343	3.7573/15RS
1 234 332 344	3.7573/12RS
1 234 332 346	3.7573/13RS
1 234 332 347	3.7573/19RS
1 234 332 348	3.7573/16RS
1 234 332 349	3.7573/18RS
1 234 332 350	3.7573/21RS
1 234 332 351	3.7573/12RS
1 234 332 353	3.7573/17RS
1 234 332 359	3.7555RS
1 234 332 360	3.7573/21RS
1 234 332 364	3.7573/22RS
1 234 332 365	3.7573/25RS
1 234 332 366	3.7573/21RS
1 234 332 370	3.7573/23RS
1 234 332 371	3.7573/22RS
1 234 332 374	3.7573/21RS
1 234 332 381	3.7573/27RS
1 234 332 382	3.7573/26RS
1 234 332 387	3.7573/21RS
1 234 332 390	3.7573/47RS
1 234 332 393	3.7573/21RS
1 234 332 395	3.7573/40RS
1 234 332 399	3.7573/21RS
1 234 332 401	3.7561RS
1 234 332 402	3.7573/21RS
1 234 332 408	3.7573/46RS
1 234 332 414	3.7573/21RS
1 234 332 417	3.7573/25RS
1 234 332 421	3.7573/48RS
1 234 332 422	3.7573/46RS
1 234 332 426	3.7573/49RS
1 234 332 800	3.7593
1 234 332 801	3.7593RS
1 234 332 802	3.7691
1 234 332 803	3.7681
1 234 332 805	3.7683RS
1 234 332 808	3.8237
1 234 332 809	3.8237RS
1 234 332 810	3.8237
1 234 332 811	3.8237RS
1 234 332 812	3.8237
1 234 332 813	3.8237RS
1 234 332 814	3.8236RS
1 234 332 827	3.7614
1 234 332 828	3.7614
1 234 332 836	3.7514RS
1 234 332 838	3.7688RS
1 234 332 841	3.7688RS
1 234 332 845	3.7688RS
1 234 332 848	3.8112
1 234 332 849	3.8242RS
1 234 332 850	3.7683RS
1 234 332 859	3.8714RS
1 234 332 860	3.7694

BOSCH	
1 234 332 861	3.7596
1 234 332 902	3.7512RS
1 234 332 903	3.7514RS
1 234 332 904	3.7518RS
1 234 332 906	3.7521RS
1 234 332 907	3.7521RS
1 234 332 908	3.7525RS
1 234 332 918	3.7593RS
1 234 335 082	3.7514RS
1 234 335 215	3.7525RS
1 234 335 216	3.7526RS
1 234 335 280	3.7527RS
1 234 335 300	3.7555RS
1 234 335 305	3.7559RS
1 234 335 801	3.7593RS
1 234 335 802	3.7691
1 234 335 805	3.7683RS
1 234 335 845	3.7688RS
1 235 522 040	2.7481PHT
1 235 522 041	2.7481PHT
1 235 522 050	2.7476PHT
1 235 522 051	2.7472PHT
1 235 522 053	2.7481PHT
1 235 522 056	2.7479PHT
1 235 522 058	2.7476PHT
1 235 522 059	2.7476PHT
1 235 522 060	2.7472PHT
1 235 522 074	2.7492PHT
1 235 522 075	2.7481PHT
1 235 522 103	2.7472PHT
1 235 522 107	2.7462
1 235 522 109	2.7472PHT
1 235 522 134	2.7462
1 235 522 141	2.7476PHT
1 235 522 144	2.7476PHT
1 235 522 145	2.7476PHT
1 235 522 146	2.7472PHT
1 235 522 147	2.7472PHT
1 235 522 154	2.7472PHT
1 235 522 155	2.7479PHT
1 235 522 157	2.7462
1 235 522 158	2.7472PHT
1 235 522 159	2.7472PHT
1 235 522 167	2.7476PHT
1 235 522 169	2.7476PHT
1 235 522 171	2.7472PHT
1 235 522 173	2.7476PHT
1 235 522 175	2.7476PHT
1 235 522 176	2.7472PHT
1 235 522 177	2.7472PHT
1 235 522 179	2.7476PHT
1 235 522 181	2.7472PHT
1 235 522 183	2.7479PHT
1 235 522 185	2.7479PHT
1 235 522 188	2.7479PHT
1 235 522 189	2.7479PHT
1 235 522 193	2.7479PHT
1 235 522 195	2.7481PHT
1 235 522 196	2.7480PHT
1 235 522 198	2.7481PHT
1 235 522 199	2.7479PHT
1 235 522 201	2.7479PHT
1 235 522 202	2.7480PHT
1 235 522 203	2.7479PHT
1 235 522 208	2.7490PHT
1 235 522 213	2.7494PHT
1 235 522 218	2.7493PHT
1 235 522 219	2.7479PHT
1 235 522 227	2.7479PHT
1 235 522 229	2.7481PHT
1 235 522 256	2.7479PHT
1 235 522 290	2.7481PHT
1 235 522 295	2.7481PHT
1 235 522 307	2.7499
1 235 522 315	2.7479PHT
1 235 522 322	2.7509PHT

BOSCH	
1 235 522 323	2.7492PHT
1 235 522 324	2.7490PHT
1 235 522 325	2.7517PHT*A
1 235 522 326	2.7508PHT
1 235 522 327	2.7508PHT*A
1 235 522 329	2.7523PHT
1 235 522 330	2.7523PHT*A
1 235 522 332	2.7524PHT
1 235 522 333	2.7521PHT
1 235 522 356	2.7479PHT
1 235 522 357	2.7494PHT
1 235 522 361	2.7521PHT
1 235 522 362	2.7481PHT*A
1 235 522 364	2.7530/8PHT
1 235 522 365	2.7530/8PHT*A
1 235 522 366	2.7527PHT
1 235 522 368	2.7523PHT
1 235 522 369	2.7530/1PHT
1 235 522 370	2.7529PHT
1 235 522 371	2.7530/1PHT
1 235 522 372	2.7530/31PHT
1 235 522 374	2.7530/5PHT
1 235 522 375	2.7530/36PHT
1 235 522 380	2.7530/4PHT*A
1 235 522 381	2.7530/4PHT
1 235 522 382	2.7527PHT*A
1 235 522 384	2.7530/7PHT
1 235 522 385	2.7530/1PHT*A
1 235 522 387	2.7530/6PHT
1 235 522 388	2.7530/6PHT*A
1 235 522 390	2.7530/3PHT
1 235 522 391	2.7530/9PHT
1 235 522 392	2.7530/9PHT*A
1 235 522 395	2.7528PHT*A
1 235 522 396	2.7530/17PHT*A
1 235 522 397	2.7530/17PHT
1 235 522 399	2.7530/10PHT
1 235 522 400	2.7530/10PHT*A
1 235 522 401	2.7530/11PHT
1 235 522 404	2.7530/1PHT
1 235 522 405	2.7530/1PHT*A
1 235 522 408	2.7530/30PHT*A
1 235 522 409	2.7480PHT*A
1 235 522 417	2.7530/21PHT*A
1 235 522 418	2.7530/21PHT
1 235 522 419	2.7530/18PHT
1 235 522 420	2.7530/18PHT*A
1 235 522 421	2.7530/8PHT
1 235 522 423	2.7530/23PHT
1 235 522 424	2.7480PHT
1 235 522 426	2.7530/3PHT
1 235 522 434	2.7530/27PHT
1 235 522 435	2.7530/27PHT*A
1 235 522 436	2.7530/19PHT
1 235 522 437	2.7530/26PHT
1 235 522 438	2.7530/28PHT
1 235 522 439	2.7530/28PHT*A
1 235 522 442	2.7530/22PHT*A
1 235 522 443	2.7494PHT
1 235 522 444	2.7530/36PHT
1 235 522 447	2.7530/30PHT
1 235 522 449	2.7530/3PHT*A
1 235 522 453	2.7530/33PHT
1 235 522 454	2.7530/33PHT*A
1 235 522 456	2.7479PHT
1 235 522 465	2.7494PHT
1 235 522 496	2.7480PHT
1 235 522 801	2.7566PHT
1 235 522 803	2.7649PHT
1 235 522 804	2.7641
1 235 522 805	2.7645
1 235 522 806	2.7645
1 235 522 807	2.8169
1 235 522 810	2.8181
1 235 522 812	2.8543
1 235 522 816	2.7903

BOSCH	
1 235 522 819	2.7903
1 235 522 822	2.7783
1 235 522 829	2.8186
1 235 522 831	2.8075
1 235 522 832	2.7659PHT
1 235 522 835	2.8625
1 235 522 836	2.8169
1 235 522 837	2.7714
1 235 522 843	2.8078
1 235 522 844	2.8190
1 235 522 845	2.7654PHT
1 235 522 863	2.7573PHT
1 235 522 901	2.7476PHT
1 235 522 902	2.7472PHT
1 235 522 903	2.7476PHT
1 235 522 904	2.7472PHT
1 235 522 905	2.7479PHT
1 235 522 907	2.7462
1 235 522 908	2.7479PHT
1 235 522 930	2.7566PHT
1 235 522 931	2.7480PHT
1 235 525 056	2.7479PHT
1 235 525 059	2.7476PHT
1 235 525 196	2.7480PHT
1 235 525 801	2.7566PHT
1 235 525 803	2.7649PHT
1 235 525 806	2.7645
1 235 525 812	2.8543
1 237 000 065	2.7530/11PHT*A
1 237 010 027	8.2723
1 237 010 033	8.2733
1 237 010 039	8.2723
1 237 011 073	8.2659
1 237 011 076	8.2693
1 237 011 081	8.2719
1 237 011 111	8.2693
1 237 011 114	8.2733
1 237 011 119	8.2734
1 237 011 122	8.2723
1 237 011 124	8.2723
1 237 013 000	1.2547
1 237 013 001	1.2547
1 237 013 002	1.2534HDVS
1 237 013 003	1.2547
1 237 013 006	1.2529HDV
1 237 013 007	1.2529HDV
1 237 013 008	1.2521
1 237 013 009	1.2529HDV
1 237 013 010	1.2529HDV
1 237 013 025	1.2529HDV
1 237 013 027	1.2521
1 237 013 029	1.2529HDV
1 237 013 039	1.2532HDV
1 237 013 041	1.2521
1 237 013 042	1.2521
1 237 013 044	1.2534HDVS
1 237 013 045	1.2529HDV
1 237 013 047	1.2521
1 237 013 049	1.2529HDV
1 237 013 051	1.2534HDVS
1 237 013 052	1.2549HDVS
1 237 013 053	1.2529HDV
1 237 013 055	1.2532HDV
1 237 013 056	1.2529HDV
1 237 013 057	1.2540
1 237 013 059	1.2549HDVS
1 237 013 060	1.2547
1 237 013 061	1.2549HDVS
1 237 013 062	1.2549HDVS
1 237 013 063	1.2534HDVS
1 237 013 065	1.2534HDVS
1 237 013 066	1.2534HDVS
1 237 013 068	1.2540
1 237 013 074	1.2534HDVS
1 237 013 075	1.2562
1 237 013 077	1.2534HDVS

BOSCH	
1 237 013 079	1.2562
1 237 013 081	1.2534HDVS
1 237 013 082	1.2549HDVS
1 237 013 083	1.2534HDVS
1 237 013 086	1.2562
1 237 013 087	1.2534HDVS
1 237 013 088	1.2534HDVS
1 237 013 090	1.2534HDVS
1 237 013 091	1.2562
1 237 013 094	1.2534HDVS
1 237 013 096	1.2534HDVS
1 237 013 098	1.2534HDVS
1 237 013 101	1.2547
1 237 013 102	1.2529HDV
1 237 013 103	1.2529HDV
1 237 013 105	1.2532HDV
1 237 013 106	1.2534HDVS
1 237 013 107	1.2540
1 237 013 108	1.2562
1 237 013 109	1.2534HDVS
1 237 013 110	1.2534HDVS
1 237 013 111	1.2534HDVS
1 237 013 112	1.2562
1 237 013 113	1.2549HDVS
1 237 013 114	1.2534HDVS
1 237 013 115	1.2562
1 237 013 116	1.2534HDVS
1 237 013 117	1.2534HDVS
1 237 013 119	1.2534HDVS
1 237 013 121	1.2549HDVS
1 237 013 122	1.2562
1 237 013 123	1.2534HDVS
1 237 013 124	1.2534HDVS
1 237 013 125	1.2534HDVS
1 237 013 129	1.2549HDVS
1 237 013 130	1.2534HDVS
1 237 013 138	1.2534HDVS
1 237 013 139	1.2562
1 237 013 140	1.2534HDVS
1 237 013 143	1.2562
1 237 013 144	1.2534HDVS
1 237 013 145	1.2534HDVS
1 237 013 146	1.2549HDVS
1 237 013 147	1.2549HDVS
1 237 013 150	1.2534HDVS
1 237 013 151	1.2549HDVS
1 237 013 152	1.2549HDVS
1 237 013 157	1.2549HDVS
1 237 013 158	1.2549HDVS
1 237 013 300	1.3691/6
1 237 013 302	1.3691/6
1 237 013 305	1.3691/5
1 237 013 307	1.5945
1 237 013 600	1.4456HDV
1 237 013 710	1.2529HDV
1 237 013 712	1.2534HDVS
1 237 013 713	1.4920
1 237 013 714	1.4932
1 237 013 715	1.4143HDV
1 237 013 717	1.3661
1 237 013 718	1.3664
1 237 013 719	1.4683MHDV
1 237 013 720	1.3656
1 237 013 724	1.4144HDV
1 237 013 728	1.4143HDV
1 237 013 802	1.3455HDVS
1 237 013 803	1.4920
1 237 013 804	1.4932
1 237 013 805	1.4939
1 237 013 806	1.4940
1 237 013 808	1.3655
1 237 013 809	1.3661
1 237 013 811	1.3664
1 237 013 812	1.3667
1 237 013 814	1.3691/11U
1 237 013 819	1.4683MHDV

BOSCH	
1 237 013 821	1.6854
1 237 013 824	1.4923
1 237 013 826	1.3511HDV
1 237 013 827	1.3676
1 237 013 828	1.3691/11U
1 237 013 831	1.4942
1 237 013 832	1.4456HDV
1 237 013 835	1.4927
1 237 013 837	1.7271
1 237 013 838	1.3686
1 237 013 840	1.3691/2
1 237 013 842	1.3455HDVS
1 237 013 846	1.3455HDVS
1 237 013 848	1.3691/3
1 237 013 901	1.2547
1 237 013 902	1.2529HDV
1 237 013 904	1.2532HDV
1 237 013 906	1.2534HDVS
1 237 013 907	1.2540
1 237 013 910	1.3655
1 237 013 911	1.6854
1 237 013 912	1.2549HDVS
1 237 013 913	1.2534HDVS
1 237 013 914	1.2534HDVS
1 237 013 915	1.2549HDVS
1 237 013 916	1.2534HDVS
1 237 013 917	1.2534HDVS
1 237 013 918	1.3455HDVS
1 237 013 919	1.4932
1 237 013 920	1.4939
1 237 013 921	1.4940
1 237 013 923	1.2534HDVS
1 237 013 924	1.3455HDVS
1 237 015 802	1.3455HDVS
1 237 015 804	1.4932
1 237 015 805	1.4939
1 237 015 806	1.4940
1 237 015 808	1.3655
1 237 015 821	1.6854
1 237 015 848	1.3691/3
1 237 031 093	8.2744
1 237 031 123	8.2653*S
1 237 031 180	8.2733
1 237 031 296	8.2723
1 237 031 339	8.2744
1 237 330 035	0.0130
1 237 330 036	0.0130
1 237 330 039	0.0130
1 237 330 307	0.0179/112
1 237 330 310	0.0179/96
1 237 330 316	0.0179/95
1 237 330 340	0.0179/112
1 237 330 348	0.0179/157
1 237 330 353	0.0179/112
1 237 330 801	0.0323
1 237 330 803	0.0323
1 237 330 805	0.0334
1 237 330 806	0.0334
1 237 330 810	0.0856
1 237 330 811	0.0856
1 237 330 828	0.0617
1 987 231 000	1.3511HDV
1 987 231 001	1.3511HDV
1 987 231 004	1.4456HDV
1 987 231 006	1.5084
1 987 231 015	1.5084
1 987 231 020	1.3522HDV
1 987 231 032	1.5084
1 987 231 033	1.5085
1 987 231 900	1.3511HDV
1 987 231 904	1.4456HDV
1 987 231 915	1.5084
1 987 231 932	1.5084
1 987 231 933	1.5085
1 987 233 003	2.8303/1
1 987 233 008	2.7903

BOSCH	
1 987 233 012	2.8303/1
1 987 233 020	2.8303/1
1 987 233 022	2.7593
1 987 233 030	2.7630/32
1 987 233 032	2.7622
1 987 233 033	2.7592
1 987 233 036	2.7911
1 987 233 037	2.7922
1 987 233 043	2.8322/18
1 987 233 044	2.8322/21
1 987 233 047	2.7957
1 987 233 051	2.7940
1 987 233 052	2.7946
1 987 233 054	2.7623
1 987 233 055	2.7607
1 987 233 908	2.7903
1 987 233 912	2.8303/1
1 987 234 001	3.7614
1 987 234 003	3.7614
1 987 234 009	3.8323
1 987 234 015	3.7952
1 987 234 021	3.7614
1 987 234 024	3.8323
1 987 234 025	3.7627
1 987 234 027	3.7629
1 987 234 031	3.7973
1 987 234 033	3.8331/13
1 987 234 038	3.8331/10
1 987 234 041	3.7628
1 987 234 042	3.7956
1 987 234 901	3.7614
1 987 234 909	3.8323
2 207 013 002	1.2564
2 207 013 003	1.2564
2 207 013 004	1.2571
2 207 013 005	1.2571
2 207 013 007	1.2564
2 207 110 007	1.2571
2 207 330 011	0.0130
2 207 330 041	0.0179/80
2 207 330 050	0.0179/80
9 220 332 702	9.6001D
9 230 087 016	8.2653*N
9 230 087 019	8.2653*N
9 230 087 030	8.2653*N
9 230 087 036	8.2653*N
9 230 087 038	8.2653*N
9 230 087 039	8.2653*N
9 230 087 044	8.2653*N
9 230 087 046	8.2653*N
9 230 087 056	8.2653*N
9 230 087 062	8.2653*N
9 230 087 065	8.2653*N
9 231 064 336	3.7573/31
9 231 064 346	3.7573/31
9 231 065 501	2.7512PHT
9 231 065 502	2.7472PHT
9 231 065 503	2.7472PHT
9 231 065 504	2.7472PHT
9 231 065 506	2.7512PHT
9 231 065 516	2.7512PHT
9 231 065 529	2.7530/14PHT
9 231 067 027	1.2534HDVS
9 231 081 319	2.7498
9 231 081 413	2.7498
9 231 081 628	3.7545RS
9 231 081 678	2.7498
9 231 086 370	2.7494PHT
9 231 087 552	8.2660
9 231 087 677	3.7573/21RS
9 231 140 245	2.7479PHT
9 231 337 005	1.3724
9 231 337 005 706	1.3724
9 231 337 041	1.4932
9 231 337 072	1.3724
9 231 337 072 706	1.3724

BOSCH

9 231 337 074	1.3726
9 232 081 442	2.7494PHT
9 232 337 354	0.0397
9 232 337 354 706	0.0397
9 233 335 511	2.7714
F 000 ZS0 001	9.6092
F 000 ZS0 111	9.6040
F 000 ZS0 206	9.6316*4
F 000 ZS0 207	9.6316

CHEVROLET

10495411	3.7598
25183557	4.7249
25186687	9.6445
25195107	9.6447
25198623	9.6447
25200553	9.6447
55561655	9.6445
55575499	9.6447
55577898	9.6447
55579072	9.6447
55584404	9.6445
93740920	2.8322/39
93740921	3.8331/31
93740943	2.8322/72
93740944	3.8331/39
95528319	9.6447
96190263	4.9677
96211948	4.9680
96256433	4.9634
96288956	4.7006
96291306	4.7007
96305387	4.9731
96342284	4.9730
96450249	4.9509
96453420	9.6485
96460220	4.9677
96460221	4.7247
96460222	4.7247
96460223	4.7247
96460224	4.7247
96476983	9.6445
96497773	4.9680
96518123	4.9634
96651945	4.7249
96984145	4.7249

CHRYSLER

4773841	4.9508
4797685	4.9343
4883233	4.9507
4883233AB	4.9507
5018394AE	4.9511
5019593AA	4.9345
5033216AC	4.9719
5033217AC	4.9719
5033218AC	4.9719
5033219AC	4.9719
5033233AB	4.9511
5033233AB	4.9990
5033266AA	4.9990
5098138AA	9.6317
5226535	3.7579
55208723	9.6323
55214926	9.6449
55229959	9.6449
56 027 075	3.7892
83 300 121	2.7659PHT
83 300 122	2.7654PHT
83 300 123	2.7665PHT
83 300 124	2.7663PHT
83 300 126	3.7691

CHRYSLER

83 300 127	3.7688
83 300 128	3.7694
83 300 129	3.7697
83 300 133	1.3686
83 300 134	1.3655
MD338 624	4.9764
MD61 9050	2.8322/61
MD611 459	3.8331/9
MD611 526	2.8322/16
MD611 757	3.8331/9
SPW07685AA	4.9343
T0267693	3.7573/19RS
T0267694	2.7530/6PHT*A
T1020357	3.7688
T1031135	9.6007
T1407311	2.7659PHT
T1407311	3.7688

CITROËN

16 075 767 80	9.6405
16 115 478 80	9.6359
2L 548 622 2Y	3.8242RS
2L 548 635 8B	0.0617
54 283 90	3.7683RS
54 283 90P	3.7683RS
54 463 39M	1.3656
54 524 17C	0.0323
54 524 19Z	2.7645
54 524 21	3.7691
54 524 21W	3.7691
54 524 22G	1.3655
54 656 04	2.7659PHT
54 656 04P	2.7659PHT
54 747 41	1.3664
54 862 20	0.0617
54 862 21M	1.4942
54 862 24	2.8190
55 081 70	3.7691
5900 F1	8.3619*N
5900 F6	8.3619*N
5900 F7	8.3619*N
5900 F8	8.3619*N
5900 F9	8.3619*N
5900 G2	8.3619*N
5900 H5	8.3619*N
5900 J3	8.3619*N
5900 K1	8.3619*N
5900 K7	8.3619*N
5900 K8	8.3619*N
5904 K3	8.3617
5904 K8	8.3619
5937 42	3.7573/19RS
5940 57	2.7687
5941 47	2.7530/22PHT*A
5945 48	9.4005
5945 51	9.4034
5967 K9	4.8491
5967 L0	4.8674
5967 L1	4.8494
5967 L6	4.8494
5967 L7	4.8674
5967 L8	4.8494
5967 L9	4.9025
5967 N1	4.8494
5967 N2	4.8655
5967 N6	4.9374
5967 N7	4.8674
5967 N9	4.9376
5967 P1	4.9374
5970 42	9.6006
5970 43	9.6005
5970 45	9.6055
5970 48	9.6088

CITROËN

5970 49	9.6089
5970 53	9.6068
5970 60	9.6088
5970 64	9.6375
5970 70	9.6088
5970 72	9.6303
5970 74	9.6303
5970 75	9.6308
5970 78	9.6305
5970 79	9.6305
5970 80	9.6307
5970 84	9.6409
5970 85	9.6383
5970 87	9.6376
5970 88	9.6361
5970 90	9.6305
5970 91	9.6375
5970 96	9.6397
5970 97	9.6305
5970 98	9.6308
5970 99	9.6307
5970 A0	9.6376
5970 A5	9.6409
5970 A8	9.6305
5970 A9	9.6303
5970 C0	9.6361
5970 C1	9.6361
75 520 155	2.7658PHT
75 524 767	2.7659PHT
75 531 089	0.0617
77 002 676 93	3.7573/19RS
79 015 927 44	1.3676
79 015 927 83	1.3691/3
79 015 937 22	3.7688
79 015 948 11	0.0334
8970 98	9.6308
91 504 912	9.4005
91 506 338	9.4005
91 538 999	2.7677PHT
91 539 003	2.7678PHT*M
91 541 615	2.7678PHT*M
94 059 373 08	3.7696RS
94 059 413 28	2.7524PHT
95 534 910	2.7654PHT
95 534 913	1.3686
95 538 865	3.8242RS
95 539 165	2.7658PHT
95 539 596	3.7683RS
95 547 732	0.0334
95 559 241	3.7694
95 602 185	3.7556RS
95 610 822	2.7659PHT
95 610 822	3.7691
95 611 732	3.7694
95 618 396	2.7667PHT
95 619 491	2.7530/11PHT
95 624 952	8.3617
95 624 985	2.7674PHT
95 624 987	8.3619
95 643 723	8.3619
95 651 019	3.7702RS
95 659 596	4.8747
95 659 654	2.7530/11PHT*A
96 001 914	8.3619*N
96 002 856	8.3619*N
96 004 266	8.3619*N
96 010 513	9.6005
96 014 242	8.3619*N
96 020 587	8.3619*N
96 035 284	9.6055
96 038 183	2.7678PHT*M
96 038 185	2.7678PHT*M
96 039 183	8.3619*N
96 048 070	9.4034
96 054 877	2.7530/22PHT
96 062 288	9.6089

CITROËN

96 070 995	4.8491
96 074 054	9.6088
96 074 954	2.7677PHT
96 088 851	4.8494
96 094 933	4.8674
96 099 747	4.8674
96 099 749	4.8494
96 161 266	4.8494
96 228 897	9.6088
96 246 755 80	9.6303
96 281 585 80	9.6303
96 341 314 80	9.6308
96 351 725 80	9.6409
96 358 647 80	9.6305
96 358 649 80	9.6305
96 363 378 80	9.6307
96 453 331 80	9.6409
96 517 106 80	9.6383
96 548 144 80	9.6305
96 566 957 80	9.6376
96 582 279 80	9.6376
96 712 145 80	9.6509
96 753 909 80	9.6520
97 522 876	9.4005
97 530 125	9.4005
97 530 780	9.6005
97 531 206	9.6006
97 531 922	9.4005
97 532 831	9.4005
97 534 955	4.8747
98 067 027 80	9.6375
98 078 418 80	9.6375
AZ 211-17	1.3664
DM 211-15	2.7649PHT
DM 211-16	3.7691
DM 211-17	1.3655
DM 212 08B	9.6001D
DM21 18	0.0323
DX 211-202A	0.0323
DX 211-215A	2.7645
GX 061 800 1A	2.7645
GX 061 850 1A	0.0334

CUPRA

04E 905 110 K	9.6499
04E 905 110 P	9.6499
06H 905 110 L	9.6536
06L 905 110 K	9.6536

DACIA

0.0323_GA	0.0323
22 43 324 28R	9.6513
22 43 325 97R	9.6332
22 43 327 34R	9.6452
22 43 335 29R	9.6332
22 43 361 34R	9.6496
22 44 042 52R	4.7252
60 01 543 604	9.6496
77 00 107 177	9.6332
77 00 113 357	9.6332
77 00 273 826	4.7244
77 00 274 008	9.6496
82 00 208 611	9.6332
82 00 380 267	9.6332
82 00 405 098	9.6332
82 00 506 297	4.7244
82 00 568 671	9.6332
82 00 702 693	9.6418
82 00 713 680	4.7246
82 00 765 882	9.6332
82 00 943 801	4.7252

DAEWOO

0001587003	9.6216
0001587503	9.6216
10467543	2.7575PHT
10495411	3.7598
10496278	2.7575PHT
329010	2.8322/72
329013	3.8331/39
33321-78B40-000	2.8322/39
93740920	2.8322/39
93740921	3.8331/31
93740943	2.8322/72
93740944	3.8331/39
96190263	4.9677
96211948	4.9680
96256433	4.9634
96288956	4.7006
96291306	4.7007
96305387	4.9731
96320818	9.6119*U
96336522	9.6119*U
96342284	4.9730
96450249	4.9509
96453420	9.6485
96460220	4.9677
96497773	4.9680
96518123	4.9634
NP1149	4.9433
NP1332	4.9942
TD200C01001	3.8331/31
TS100C00601	2.8322/39

DAF

22 12 12	1.2529HDV
22 45 64	1.2534HDVS
22 45 66	3.7521RS
22 48 85	3.7691
22 48 86	1.3655
22 48 87	0.0323
22 48 88	2.7649PHT
52 84 20	3.7518RS
57 32 24 887	0.0323

DAIHATSU

02935-00200	1.3511HDV
19101-1516	2.7630/32
19101-15160-000	2.7630/32
19101-2507	2.7593
19101-25070-000	2.7593
19101-87103-000	2.7630/28
19101-87105-000	2.7630/28
19101-87207-000	2.7628
19101-87301	2.7903
19101-87601-000	2.7630/27
19101-87703	2.7594
19101-87703-000	2.7594
19102-26150-000	3.7614
19102-33012-000	3.7614
19102-38210-000	3.7627
19102-87101-000	3.7628
19102-87102-000	3.7628
19102-87204-000	3.7614
19102-87206-000	3.7630
19102-87207-000	3.7634
19102-87701-000	3.7614
19102-87703-000	3.7629
19102-87704-000	3.7630
19102-87705-000	3.7629
19103-87204-000	1.3522HDV
19145-26060-000	1.3511HDV
19145-87203-000	1.3511HDV
19145-87204-000	1.3522HDV

DAIHATSU

19145-87205-000	1.3522HDV
19145-87206-000	1.3511HDV
19145-87301	1.4456HDV
19145-87701	1.3511HDV
19145-87701-000	1.3511HDV
19901-87186-000	4.9732
19901-87196-000	4.9732
19901-87B87-000	4.9436
90048-52072-000	9.6152
90048-52095-000	9.6152
90048-66019-000	4.9732
90919-02257	9.6437
90919-02262	9.6361
99329-35902	1.3511HDV

DELPHI

1104082	9.6350
1104091	9.6383
19005212	9.6299
19005267	9.6387
19005293	9.6375
19005316	9.6507
19005358	9.6445
19005362	9.6447
28114820	9.6375
28211913	9.6509
28276583	9.6520
28326927	9.6445
28372862	9.6375
28400714	9.6526
CE20009-12B1	9.6350
CE20014-12B1	9.6332
CE20042-12B1	9.6432
CE20044-12B1	9.6432
GN10210-12B1	9.6375
GN10236-12B1	9.6329
GN10314-12B1	9.6361
GN10571-12B1	9.6375
GN10572-12B1	9.6375

DENSO

029 120-135	2.7599
029 120-139	2.7614
029 120-152	2.7619
029 120-167	2.7599
029 120-224	2.7630/48
029 120-227	2.7619
029 120-234	2.7630/48
029 120-253	2.7630/27
029 120-255	2.7599
029 120-256	2.7599
029 120-263	2.7630/21
029 120-265	2.7630/18
029 120-273	2.7630/48
029 120-282	2.7630/22
029 120-321	2.7630/35
029 120-333	2.7630/45
029 120-340	2.7630/37
029 120-357	2.7630/42
029 120-366	2.7630/43
029120-0600	2.7593
029120-0601	2.7593
029120-0741	2.7592
029120-0760	2.7594
029120-1020	2.7599
029120-1080	2.7602
029120-1290	2.7613
029120-1390	2.7614
029120-1410	2.7630/32
029120-1480	2.7617
029120-1510	2.7622

DENSO

029120-1520	2.7619
029120-1540	2.7607
029120-1600	2.7630/10
029120-1700	2.7630/11
029120-1720	2.7628
029120-1850	2.7623
029120-2120	2.7630/48
029120-2130	2.7630/32
029120-2291	2.7630/15
029120-2311	2.7593
029120-2590	2.7623
029120-2610	2.7630/28
029180-0240	3.7614
029180-0241	3.7614
029180-0340	3.7614
029180-0430	3.7614
029180-0580	3.7614
029180-0660	3.7627
029180-0910	3.7629
029180-0920	3.7628
029180-0921	3.7628
029180-0930	3.7629
029180-0990	3.7630
029180-1130	3.7630
029180-1230	3.7629
029180-1260	3.7630
029180-1280	3.7634
029180-1300	3.7634
029180-1310	3.7628
029180-1391	3.7628
029350-0200	1.3511HDV
029350-0270	1.3511HDV
029350-0550	1.3522HDV
029350-0650	1.3511HDV
029350-0660	1.3522HDV
029350-0690	1.3511HDV
029350-0740	1.3522HDV
029350-0820	1.3522HDV
029350-0860	1.3511HDV
029700-5430	9.6097
029700-6700	9.6035
029700-6760	9.6070
029700-6770	9.6189
029700-6780	9.6189
029700-6820	9.6102
029700-7050	9.6103
029700-7051	9.6103*U
029700-7180	9.6070
029700-7301	9.6222
029700-7531	9.6189
029700-7700	9.6185S
029700-7910	9.6070
029700-8240	9.6332
029700-8291	9.6332
099 700-061	9.6357
099 700-072	9.6357
099 700-101	9.6422
099 700-114	9.6357

DS

5970 91	9.6375
96 712 145 80	9.6509
96 753 909 80	9.6520

DUCATI

11 30 26	0.0130
31 30 26	0.0130
331.04.0290	0.0130
1129.26. 00	0.0130
1129.26. 90	0.0130
1130.26. 00	0.0130

DUCATI

1130.26. 90	0.0130
3011.30. 26	0.0130
4011.29.2600	0.0130
4011.29.2690	0.0130
4011.30.2600	0.0130
4011.30.2690	0.0130

EFI AUTOMOTIVE

1420	4.8920
1429	4.7244
1431	4.9492
1439	4.7049
1443	4.9681
1514	9.6319
151401	9.6319
151408	9.6418
1543	9.6303
154301	9.6303
154302	9.6305
154303	9.6305
155001	9.6214
155002	9.6286
155003	9.6298
155004	9.6216
155006	9.6297
155009	9.6380
155010	9.6432
155013	9.6276
155014	9.6278
155015	9.6096
155016	9.6496
155017	9.6046
155018	9.6255
155019	9.6256
155020	9.6342
155022	9.6300
155022	9.6300
155025	9.6175
155026	9.8114
155026	9.8114
155027	9.6308
155027	9.6308
155028	9.6359
155028	9.6359
155029	9.6300
155031	9.6409
155032	9.6307
155032	9.6307
155033	9.6088
155034	9.6089
155038	9.6408
155039	9.6350
155039	9.6350
155040	9.6376
155041	9.6376
155045	9.6298
155046	9.6407
155049	9.6375
155050	9.6265
155051	9.6245
155054	9.6334
155056	9.6008
155057	9.6172
155058	9.6048
155059	9.6055
155060	9.6128
155061	9.6007
155062	9.6241
155064	9.6040
155065	9.6058
155066	9.6114
155067	9.6274
155068	9.6294

EFI AUTOMOTIVE

155069	9.6059
155070	9.6314
155071	9.6099
155072	9.6317
155073	9.8123
155074	9.6323
155074	9.6323
155075	9.6381
155076	9.6068
155077	9.6217
155079	9.6119
155082	9.6005
155083	9.6006
155085	9.6078
155086	9.6113
155088	9.6348
155089	9.6173
155092	9.6457
155093	9.6485
155095	9.6213
155100	9.6062S
155102	9.6327
155103	9.6325
155104	9.6331
155106	9.6335
155109	9.6337
155110	9.6336
155111	9.6333
155113	9.6486
155118	9.6480
155119	9.6489
155125	9.6502
155136	9.6375
155138	9.6389
155140	9.6361
155140	9.6361
155141	9.6366
155142	9.6358
155148	9.6383
155149	9.6247
155154	9.6133
155164	9.6068
155166	9.6485
155174	9.6395
155177	9.6481
155180	9.6378
155183	9.6396
155184	9.6435
155190	9.6375
155200	9.6313
155205	9.6445
155400	9.6062S
155500	9.6254S
155700	9.6062S
156100	9.8120
156200	9.6332
156200	9.6332
156300	9.6299
157100	9.6284
157400	9.6374
157400	9.6374
157400P	9.6374
157500	9.6329
157500	9.6329
157600	9.6345
157700	9.6327
157900	9.6326
2456	4.8801
2457	4.7244
2458	4.7244
2476	4.8802
2476	4.8802
2497	4.8415
3414	4.8511
4002	4.9373
4004	4.8386

EFI AUTOMOTIVE

4005	4.9373
4006	4.8511
4008	4.8511
4015	4.9634
4020	4.8386
4060	4.9415
4061	4.8815
4081	4.8347
4100	4.8965
4102	4.8725
4113	4.8736
4120	4.9415
4148	4.9630
4149	4.9007
4150	4.8864
4153	4.8616
4158	4.8616
4159	4.8888
4162	4.9363
4163	4.9506
4167	4.8884
4168	4.9503
4169	4.8573
4173	4.9585
4176	4.9639
4177	4.8700
4178	4.9624
4193	4.9568
4194	4.9568
4205	4.9575
4206	4.9504
4207	4.9575
4303	4.8747
4304	4.8491
4310	4.8748
4331	4.8674
4333	4.8494
4334	4.9025
4404	4.8839
4405	4.8543
4486	4.8539
5101	4.9562
6102	4.9711
6431	4.8372
6462	4.7061
6467	4.8372
6468	4.7064
6469	4.7064
6522	4.9138
6812	4.8608
7103	4.8623
7109	4.9343
7116	4.8432
7119	4.8612
7121	4.8612
7151	4.9760
7155	4.9654
7171	4.9278
7172	4.9401
7210	4.9686
7237	4.9278
7240	4.8768
7246	4.8493
7247	4.8725
7251	4.8808
7255	4.8386
7260	4.8398
7262	4.8429
7263	4.9305
7264	4.8398
7266	4.8692
7267	4.8471
7270	4.8815
7272	4.8386
7273	4.8650
7274	4.8471

EFI AUTOMOTIVE

7275	4.8507
7276	4.8471
7282	4.8354
7285	4.8808
7287	4.8386
7296	4.8386
7297	4.8354
7412	4.7111
7414	4.9401
7418	4.9619
7419	4.9984
7420	4.9492
7421	4.9585
8101	4.9677
8106	4.7120

FIAT

00009049	1.2549HDVS
2194051	1.4923
313220203	3.8254RS
31322118	1.4683MHDV
31322322	3.8106
38326146	1.2549HDVS
38326383	3.7525RS
3892873	3.7752
3895010	1.4939
3895702	3.7752
39322140	9.6001D
4071394	9.6001D
4157304	3.8237RS
4158493	9.6001D
4210514	3.8236RS
4261590	4.8429
4380722	4.8507
4386221	9.6003
4460205	9.6003
46337742	9.6449
46403328	9.6214
46413088	4.9503
46425912	4.9504
46446039	9.6245
46448661	4.9527
46472440	9.6245
46473849	9.6284
46474814	4.9505
46480361	9.6245
46543562	9.6046
46548037	9.6046
46743086	4.9505
46749624	4.9451
46752948	9.6316*4
46777288	9.6342
4830772	4.8507
500309816	9.6245
504142675	9.6342
55195775	4.7170
55195776	4.7170
55200112	9.6323
55200486	9.6323
55202897	4.9451
55203737	4.9451
55208723	9.6323
55214926	9.6449
55224110	9.6449
55229959	9.6449
55237442	4.7170
55238422	4.7170
55246099	9.6342
55263679	9.6449
55270217	9.6449
553221201	2.7594
553221203	1.3511HDV
553221400	3.7614
5888330	4.8507

FIAT

59321119	2.8078
59321324	3.8112
60558152	9.6068
60562701	9.6213
60586072	9.6068
60805420	9.6046
60809492	9.6046
60809606	9.6068
60809702	2.7530/6PHT
60810690	9.6213
60815150	9.6046
6313220203	3.8254RS
631322118	1.4683MHDV
631322322	3.8106
638326146	1.2549HDVS
638326383	3.7525RS
6553202203	1.3511HDV
6553206203	1.3522HDV
6553206400	3.7634
6553221201	2.7594
6553221203	1.3511HDV
6553221400	3.7614
659321119	2.8078
659321324	3.8112
7073052	1.2534HDVS
7073054	3.7545RS
7073055	2.7498
7073905	8.2653*5
7080442	2.7479PHT
7080449	3.7561RS
7080461	8.2653
71739725	9.6350
71742420	9.6470
71742423	4.7013
71744369	9.6350
71779115	9.6350
7540530	4.8432
7553120	9.6058
7582152	9.6008
7588435	9.6002
7588436	9.8003
7596550	4.8347
7596561	4.8354
7596561	4.8398
7597831	4.8347
7598077	4.8354
7598155	4.8398
7598155	4.8692
7604095	4.8650
7604227	4.8354
7604907	4.8386
7604977	4.8386
7604977	4.8466
7605191	4.8808
7608770	4.8471
7609073	4.8398
7612954	9.6026
7613158	4.8466
7613942	4.8808
7619338	4.8351
7625396	4.8815
7625943	4.8456
7626232	9.6046
7637165	4.8354
7637166	4.8347
7646974	9.6058
7647722	4.8398
7648797	9.6068
7661948	4.8471
7663177	9.6008
7672018	9.6046
7691421	4.8808
7691421	4.8815
7694366	4.8615
7694957	4.8471
7698431	9.6008

FIAT

7700267693	3.7573/19RS
7700267694	2.7530/6PHT
7703382	4.8700
7716092	4.8815
7716094	4.8808
7730973	4.8692
7735100	4.8613
7735397	4.8655
7742005	4.8694
7742689	4.8456
7745367	4.8887
7746151	9.6048
7746152	9.6008
7746153	9.6058
7746154	9.6008
7746226	9.8003
7749930	4.8650
7749930	4.8692
7760523	4.9363
7776810	4.8616
7785350	4.8888
7787458	4.8889
7789346	9.6245
7980793	1.4939
82205020	1.4927
82272761	1.4939
82288614	3.7525RS
82289883	1.2549HDVS
82301158	3.8237RS
82301920	2.7479PHT
82305235	1.2534HDVS
82305237	2.7479PHT
82309214	3.8241
82316498	3.7525RS
82345471	3.8237RS
82348987	2.7479PHT
82357741	3.7573/15RS
82361894	2.7479PHT
82361914	2.8201PHT
82361915	3.8247RS
82368100	2.8193
8660	1.4940
8661	1.4939
9405937478	3.7696RS
9463264180	9.6308
9467511580	9.6305
9564372380	8.3619
9567469880	2.7687
9607405480	9.6088
9609493380	4.8674
9617237080	4.8494
9619064880	4.8674
9622889780	9.6088
9634131380	9.6308
9654347080	9.6305
9753012580	9.4005
9753283180	9.4005
9753293180	9.4005
98080037	2.8181
9808037	3.8236RS
9902725	3.8229
9903324	1.4920
9908338	2.8159
9908418	3.8229
9909412	1.4950M
9909413	1.4920
9909418	3.8229
9911453	1.4927
9911509	2.8182
9911552	1.4920
9911554	1.4923
9911960	3.8229
9912921	1.4927
9912922	1.4927
9913856	3.8237
9913857	3.8237RS

FIAT

9913860	2.8169
9913862	1.4932
9915391	2.8176
9915910	3.8237
9916116	2.7649PHT
9916117	3.7683RS
9916118	1.3655
9916593	3.8237RS
9917213	3.8237RS
9918269	1.7271
9918275	2.8625
9919037	2.7659PHT
9919038	1.3656
9919040	1.3656
9919346	1.4939
9919348	3.8237
9919623	1.4940
9919627	3.8236RS
9919628	2.8181
9919723	1.4940
9920029	2.7645
9920036	1.4939
9920580	3.8236RS
9920581	2.8181
9921039	1.3656
9921198	2.7645
9921476	3.8237RS
9921508	3.8237
9921509	2.8182
9922446	3.8236RS
9923115	3.8237
9924187	3.8242RS
9924316	2.8186
9924394	3.8241
9924654	3.8237
9924733	3.7683RS
9925257	1.4939
9925993	2.8186
9926748	3.8240
9927624	1.2529HDV
9927962	3.7525RS
9927967	3.7525RS
9928245	0.0617
9928247	3.8242RS
9928250	2.8190
9928255	1.4942
9929182	1.4939
9929187	3.8242RS
9929188	1.4942
9934266	0.0323
9934545	2.7659PHT
9934549	2.7645
9934652	2.7479PHT
9934708	3.7691
9934726	3.8237RS
9934727	3.8237RS
9934728	2.8193
9934729	8.4961/1
9934741	3.8236RS
9935150	1.3691/1
9935176	2.7645
9935177	2.7649PHT
9935782	3.7526RS
9936014	2.7479PHT
9936023	3.8247RS
9936027	2.8198PHT
9936331	8.4963/1
9936677	1.3691/6
9936734	0.0339
9936735	2.7658PHT
9936807	3.7752
9936814	2.7716
9936823	1.3720
9936831	3.7752RS
9936866	3.7683RS
9937480	3.7683RS

FIAT

9937592	2.7649PHT
9937709	1.3691/5
9937715	0.0334
9937716	2.7654PHT
9937729	3.8237RS
9937767	3.8254RS
9938166	0.0339
9938173	3.8255RS
9938268	0.0627
9938269	0.0628
9938272	2.8198PHT
9938273	2.8201PHT
9938274	2.8204PHT
9938276	1.4946M
9938359	2.8198PHT
9938360	2.8204PHT
9938573	1.3691/22
9938953	8.2653
9939707	3.7523RS
9939762	8.4961/1
9939786	8.4980M
9939787	2.8201PHT
9939788	8.4976M
9939789	2.8209PHT
9939790	3.8260
9940095	9.4020
9940302	3.7694
9940428	3.8257RS
9940429	8.4977/1
9940437	3.7561RS
9940569	1.4949M
9940656	2.8201PHT
9941231	8.4976M
9941693	8.4976M
9941720	8.4980M
9941721	2.7680PHT
9942040	9.4029
9942108	1.7350
9943506	3.8259
9944407	3.8260
9944576	2.8214PHT
9944630	2.8198PHT
9944668	2.8215PHT
9944794	2.8201PHT
9946355	2.8214PHT
9946356	3.8260
9947326	2.8215PHT
9950519	2.8215PHT
AXE2055	1.2549HDVS
AXE2056	3.7525RS

FIAT (YV)

7073052/1	1.4932
7073054/1	3.7752
7073055/1	2.8169

FORD

0 267 26	3.7885
0 267 2617	2.7783
0 425 469	3.7514RS
0 425 981	3.7512RS
0 464 163	1.2549HDVS
0 548 495	1.2549HDVS
0 623 389	2.7783
0 710 254	2.7479PHT
0 710 255	2.7476PHT
0 710 256	2.7472PHT
1 004 427	4.9619
1 004 430	4.9619
1 004 431	4.9619
1 004 432	4.9619

FORD

1 006 346	4.9630
1 006 347	4.9630
1 006 348	4.9630
1 006 349	4.9630
1 008 886	9.6264
1 008 887	9.6264
1 00E -12116-A	2.8070
1 00E -12116-B	2.8070
1 018 119	4.9639
1 018 131	4.9639
1 018 139	9.6264
1 018 140	9.6264
1 027 283	9.6069
1 037 292	4.9007
1 037 293	4.9007
1 037 294	4.9007
1 037 295	4.9007
1 052 493	4.9624
1 053 904	9.6432*1
1 053 905	4.9624
1 053 907	4.9624
1 053 908	4.9624
1 066 102	9.6432*1
1 067 601	9.6432
1 071 985	4.9625
1 071 986	4.9625
1 071 987	4.9625
1 071 988	4.9625
1 075 786	9.6432
1 086 377	4.9568
1 086 378	4.9568
1 086 379	4.9568
1 086 380	4.9568
1 089 980	4.9568
1 092 379	4.9624
1 094 676	4.9691
1 094 677	4.9691
1 094 679	4.9691
1 094 680	4.9691
1 094 681	4.9691
1 094 682	4.9691
1 095 589	4.9568
1 095 591	4.9568
1 095 592	4.9568
1 107 701	4.9630
1 110 740	4.9625
1 110 741	4.9625
1 110 742	4.9625
1 110 743	4.9625
1 111 212	9.6432
1 111 213	9.6432*1
1 111 215	4.9976
1 111 217	4.9976
1 111 220	4.9976
1 111 221	4.9976
1 113 148	4.9691
1 113 150	4.9691
1 113 152	4.9691
1 113 154	4.9691
1 114 743	4.9624
1 114 744	4.9624
1 114 745	4.9624
1 119 835	9.6432
1 119 840	4.9614
1 119 841	4.9614
1 119 842	4.9614
1 119 843	4.9614
1 120 169	9.6335
1 130 402	9.6432
1 13E -12116-A	2.8075
1 142 546 9	3.7514RS
1 142 596 1	3.7512RS
1 142 598 1	3.7512RS
1 142 609	4.9984
1 142 610	4.9984
1 142 611	4.9984

FORD	
1 142 612	4.9984
1 144 700 2	2.7472PHT
1 144 706 9	2.7479PHT
1 151 630 2	1.2521
1 154 411 5	1.2547
1 154 849 5	1.2549HDVS
1 171 025 4	2.7479PHT
1 171 025 5	2.7476PHT
1 171 025 6	2.7472PHT
1 171 026 8	2.7472PHT
1 207 832	4.9691
1 212 115	4.9691
1 213 032	4.9691
1 213 034	4.9691
1 214 215	4.7208
1 224 925	9.6380
1 231 646	4.9614
1 252 407	9.6335
1 255 505	4.9614
1 255 507	4.9614
1 255 509	4.9614
1 313 549	4.7208
1 313 550	4.7208
1 313 551	4.7208
1 313 552	4.7208
1 314 271	9.6380
1 317 972	9.6432
1 319 060	4.7208
1 319 061	4.7208
1 319 062	4.7208
1 319 063	4.7208
1 319 788	9.6432
1 319 929	9.6432
1 322 402	9.6380
1 331 283	9.6335
1 335 369	4.9625
1 335 371	4.9625
1 335 374	4.9625
1 335 377	4.9625
1 350 562	9.6381
1 350 567	9.6381
1 362 718	9.6335
1 371 601	9.6378
1 444 043	3.7885
1 451 676	3.7512RS
1 458 400	9.6381
1 458 944	1.4143HDV
1 458 945	1.4144HDV
1 459 278	9.6381
1 462 196	2.7783
1 502 365	4.7242
1 502 366	4.7242
1 502 367	4.7242
1 502 368	4.7242
1 517 813	9.6432
1 523 785	2.7481PHT
1 523 817	2.7479PHT
1 535 417	4.7170
1 535 419	4.7170
1 535 713	9.6323
1 568 737	1.2549HDVS
1 578 771	9.6380
1 583 458	2.7481PHT
1 584 304	1.2549HDVS
1 584 305	1.2549HDVS
1 595 255	2.7509PHT
1 604 959	3.7524RS
1 606 399	3.7525RS
1 612 099	3.7573/12RS
1 617 277	3.7573/12RS
1 619 343	9.6432
1 626 385	4.9078
1 626 386	4.9078
1 626 387	4.9078
1 626 388	4.9078
1 626 434	4.9281

FORD	
1 626 436	4.9281
1 627 668	4.9281
1 628 315	2.7792PHT
1 641 610	2.8198PHT
1 641 611	3.8257RS
1 641 614	8.4977/1
1 641 810	2.7792PHT
1 643 632	2.7793PHT
1 643 692	3.7892
1 649 067	9.6035
1 649 200	3.7894RS
1 655 993	3.8126RS
1 657 033	4.9007
1 657 147	4.9007
1 657 149	4.9007
1 660 332	3.7573/21RS
1 663 375	4.9145
1 663 376	4.9145
1 665 193	2.7792PHT
1 671 690	9.6323
1 673 468	9.6335
1 680 402	4.7242
1 680 403	4.7242
1 680 404	4.7242
1 680 405	4.7242
1 727 629	9.6381
1 754 514	9.6381
1 760 593	9.6519
1 776 803	9.6519
1 800 554	9.6523
1 823 596	9.6381
1 827 901	9.6519
1 836 729	9.6523
1 953 279	3.7970
1 953 281	2.7946
1 960 394	4.9789
1 960 491	3.8002*C
1 961 043	2.7989
1 961 207	4.9789
1S7G-12029-AB	9.6432
1S7G-12029-AC	9.6432
1S7G-12029-AD	9.6432
1S7G-12283-AE	4.9614
1S7G-12283-AF	4.9614
1S7G-12284-AD	4.9614
1S7G-12284-AE	4.9614
1S7G-12286-AE	4.9614
1S7G-12286-AF	4.9614
1S7G-12287-AD	4.9614
1S7G-12287-AE	4.9614
2S7E-12280-AF	4.7214
2S7E-12281-AE	4.7214
3 240 335	3.7525RS
3 240 336	2.7479PHT
3 241 724	8.2653
3 243 330	8.2653
3 395 566	3.8331/33
3 857 542	3.8331/37
3 880 181	3.8331/33
3 891 726	3.8331/34
3 898 173	2.8322/37
3 993 623	3.8331/32
4 006 232	2.8322/32
4 046 843	3.8331/8
4 132 265	2.8322/21
4 132 292	9.6266S
4 367 127	4.7214
4 367 128	4.7214
4 429 613	4.7214
4 434 842	4.7214
4 538 936	4.7214
4 641 63	1.2534HDVS
4M5E-12A366-AA	9.6380
4M5G-12029-ZA	9.6381
4M5G-12029-ZB	9.6381
4M5G-12A366-BA	9.6380

FORD	
4M5G-12A366-BB	9.6380
4M5G-12A366-BC	9.6380
4M5G-12A366-BD	9.6380
4S7G-12029-AA	9.6381
4S7G-12029-AB	9.6381
5 008 193	9.6199S
5 008 196	9.6070
5 014 402	2.7783
5 014 405	3.7885
5 018 844	1.2549HDVS
5 019 831	1.2549HDVS
5 021 112	3.7561RS
5 027 482	1.4144HDV
5 027 532	3.7525RS
5 047 437	9.6380
5 441 16	1.2521
5 484 95	1.2549HDVS
6 002 610	3.7524RS
6 075 742	3.7560RS
6 077 429	9.6069
6 077 487	2.8083PHT
6 077 549	2.7509PHT
6 084 817	4.9078
6 087 381	1.4689
6 124 108	3.7561RS
6 125 612	8.2733*S
6 133 233	4.9281
6 134 771	3.7573/21RS
6 137 397	4.9281
6 137 398	4.9281
6 137 399	4.9281
6 137 400	4.9281
6 137 406	4.9281
6 138 918	1.2549HDVS
6 146 328	4.9281
6 146 423	2.7530/5PHT
6 147 957	8.2653*S
6 149 976	4.9078
6 152 292	4.9281
6 152 293	4.9281
6 152 294	4.9281
6 153 386	2.8096PHT
6 153 387	3.8126RS
6 153 393	4.9281
6 153 394	4.9281
6 155 949	4.9078
6 160 862	4.9281
6 161 016	4.9078
6 166 882	4.9078
6 166 884	4.9078
6 166 886	4.9078
6 170 394	4.9078
6 170 395	4.9078
6 170 396	4.9078
6 170 397	4.9078
6 170 844	4.9078
6 171 209	4.9078
6 177 981	3.7573/40RS
6 178 534	4.9281
6 178 536	4.9281
6 182 127	2.7530/23PHT
6 182 576	8.2733*N
6 182 577	8.2733*N
6 182 579	3.7561RS
6 182 581	3.8126RS
6 182 871	4.8864
6 182 872	4.8864
6 182 904	4.8864
6 182 905	4.8864
6 183 208	4.9007
6 183 213	4.9007
6 183 218	4.9007
6 183 223	4.9007
6 184 281	4.9078
6 184 283	4.9078
6 189 557	4.9078

FORD	
6 189 558	4.9078
6 234 60	1.4144HDV
6 383 157	9.6189
6 486 345	4.9007
6 486 346	4.9007
6 486 347	4.9007
6 486 348	4.9007
6 489 415	9.6070
6 493 644	4.9281
6 493 645	4.9281
6 493 649	4.8864
6 493 650	4.9281
6 493 651	4.9281
6 493 655	4.8864
6 493 656	4.9281
6 493 657	4.9281
6 493 661	4.8864
6 493 662	4.9281
6 493 663	4.9281
6 493 666	4.8864
6 493 667	4.8864
6 503 279	9.6035
6 503 280	9.6035
6 542 391	2.8201PHT
6 596 257	4.9630
6 596 258	4.9630
6 596 259	4.9630
6 596 260	4.9630
6 609 875	4.8864
6 609 876	4.8864
6 609 877	4.8864
6 609 878	4.8864
6 630 365	9.6070
6 789 823	4.9630
6 789 824	4.9630
6 789 825	4.9630
6 789 826	4.9630
6 823 318	9.6199
6 828 806	4.9145
6 828 807	4.9145
6 831 197	4.9007
6 831 198	4.9007
6 831 199	4.8864
6 831 200	4.9007
6 831 201	4.9007
6 831 202	4.8864
6 831 203	4.9007
6 831 204	4.9007
6 831 205	4.8864
6 831 206	4.9007
6 831 207	4.9007
6 831 208	4.8864
6 860 288	9.6199
6 860 289	9.6199S
6 958 305	9.6070
681F-12107-AA	1.4143HDV
682F-12107-AA	1.4144HDV
6M21-12029-AA	9.6335
6M5G-12029-AA	9.6378
7 094 524	4.9639
7 094 525	4.9639
7 094 526	4.9639
7 094 527	4.9639
7 388 352	4.9639
7 388 353	4.9639
7 388 354	4.9639
7 388 355	4.9639
71HM-12200-AA	3.7512RS
72HF-12106-AA	2.7479PHT
72TF-12106-AA	2.7481PHT
72TF-12200-AA	3.7524RS
730X-12300B-AA	0.0856
73TF-12200-AA	3.7524RS
77BF-12107-AA	1.2549HDVS
77BF-12171-AA	1.2549HDVS
77HF-12107-AA	1.2534HDVS

FORD

78MU-12200-A	3.7525RS
78TF-12106-AA	2.7481PHT
79BB-12024-AA	9.6069
80SX-12200-AA	3.7561RS
81SF-12106-DA	2.8083PHT
81SF-12106-EA	2.7509PHT
81SF-12171-CA	1.4689
81SF-12200-FA	3.7560RS
82HF-12200-AA	3.7525RS
82TF-12200-AA	3.7524RS
84AU-12A09-3A	8.2653
84SF-12100-BA	8.2733*N
84SF-12106-AA	2.8096PHT
84SF-12200-AA	3.7561RS
84SF-12200-BA	3.7573/21RS
84SF-12200-CA	3.8126RS
88SF-12029A-1A	9.6035
88SF-12029A-2A	9.6035
88SX-12200-AA	3.7561RS
89SF-12100-JA	8.2733*N
89SF-12200-AA	3.7561RS
89SF-12200-BA	3.7573/21RS
90TF-12029A-1A	9.6189
919F-12029-AA	9.6070
91SF-12283-AC	4.8864
91SF-12286-AC	4.8864
91SF-12287-AC	4.8864
920X-12107-BA	1.4144HDV
928F-12029-CA	9.6035
928F-12029-CB	9.6199S
928F-12283-AG	4.9630
928F-12283-AJ	4.9630
928F-12284-AG	4.9630
928F-12284-AJ	4.9630
928F-12286-AG	4.9630
928F-12286-AJ	4.9630
928F-12287-AG	4.9630
928F-12287-AJ	4.9630
92GB-12024-AA	9.6069
938F-12024-DA	9.6199S
968F-12283-AD	4.9630
968F-12284-AD	4.9630
968F-12286-AD	4.9630
968F-12287-AD	4.9630
96BF-12024A-1B	9.6035
96BF-12283-AA	4.9007
96BF-12284-AA	4.9007
96BF-12286-AA	4.9007
96BF-12287-AA	4.9007
96FB-12257-AB	9.6264
96MF-12283-BA	4.9619
96MF-12284-BA	4.9619
96MF-12286-BA	4.9619
96MF-12287-BA	4.9619
988F-12024-AB	9.6432*1
988F-12029-AB	9.6432
988F-12029-AC	9.6432
988F-12029-AD	9.6432
988F-12029-AE	9.6432
988F-12029-BA	9.6432
988F-12257-AB	9.6432*1
988F-12283-AA	4.9624
988F-12284-AA	4.9624
988F-12286-AA	4.9624
988F-12286-AB	4.9624
988F-12287-AA	4.9624
98MF-12283-AA	4.9625
98MF-12284-AA	4.9625
98MF-12286-AA	4.9625
98MF-12287-AA	4.9625
9BBF-10029-BA	9.6432
9S51-12029-AA	9.6323
9S51-12029-AB	9.6323
9S51-12286-AA	4.7170
9S51-12286-BA	4.7170
A700X-12276-AGA	2.7658PHT

FORD

A720-X12171-EA	1.4456HDV
A720-X12171-FA	1.3656
A730-X12171-BA	1.4456HDV
A730X-12300-AKA	0.0323
A760-X12276-CA	2.8169
A760-X12276-EA	2.8169
A770-X12276-CA	2.7658PHT
A770-X12300-KA	0.0323
A790-X12200-DA	3.7691
A790-X12200-RA	3.8114
A800-X12171-MA	1.3656
A800-X12276-RA	2.8169
A810-X12171-RA	1.3656
A830-X12276-FA	2.7658PHT
A830-X12300-EA	0.0323
A96BF-12024-A1B	9.6264
B6S7 18100	9.6266S
C3DF-12171-A	1.4143HDV
C3DZ-12171-A	1.4143HDV
C5AZ-12171-A	1.4143HDV
C6AH-12106-A	2.7783
C6AH-12171-A	1.4143HDV
C6AH-12200-A	3.7885
C6CH-12171-A	1.4144HDV
C7AH-12200-A	3.7885
C7KH-12106-A	2.7783
CM5G-12029-FA	9.6381
CM5G-12029-FB	9.6381
CM5G-12029-FC	9.6381
CM5G-12A366-BA	9.6519
CM5G-12A366-CA	9.6519
CM5G-12A366-CB	9.6519
D5FZ-12200-A	3.7885
DIFZ-12106-A	2.7479PHT
DIFZ-12200-A	3.7512RS
DORY-12200-A	3.7885
DS7G-12A366-BA	9.6523
DS7G-12A366-BB	9.6523
E32Z-12200-B	3.8331/31
E3EE-12106-BA	2.7792PHT
E3EE-12106-BB	2.7792PHT
E5FZ-12106-B	2.7792PHT
E5FZ-12106-C	2.7792PHT
E6AE-12106-CA	2.7793PHT
E6AZ-12106-A	2.7793PHT
E6EE-12200-AA	3.7892
E6FZ-12200-A	3.7892
E7EE-12200-DA	3.7894RS
E7GZ-12200-A	3.7973
E8BZ-12200-A	3.8331/8
E8TZ-12029-A	9.6035
E9DF-12029-AA	9.6189
E9DZ-12029-A	9.6189
E9FZ-12106-A	2.7792PHT
E9SF-12029-AA	9.6070
E9SZ-12029-A	9.6070
E9TF-12029-AA	9.6035
EOTA 12 160	1.4683MHDV
EOTA 12 162 C	1.4683MHDV
EOTA 12 199 C	1.4683MHDV
EOTT-A1220-0A	3.8107
EOTT-A1220-0B	3.8107
EOTT-A1220-0C	3.8107
F0TZ-12029-A	9.6189
F1CZ-12029-A	9.6133
F1SU-12029-AA	9.6070
F1VU-12029A-1A	9.6212
F1VY-12029-A	9.6212
F220 18V00 A	2.8322/21
F32Z-12106-C	2.8322/37
F32Z-12200-A	3.8331/37
F32Z-12200-B	3.8331/31
F32Z-12200-C	3.8331/33
F42Z-12200-A	3.8331/37
F4BZ-12106-A	2.8322/50
F4BZ-12200-A	3.8331/32

FORD

F50U-12029-AA	9.6212
F50U-12029-BA	9.6212
F50Y-12029-A	9.6212
F50Y-12029-B	9.6212
F52Z-12200-A	3.8331/34
F52Z-12200-B	3.8331/31
F52Z-12200-C	3.8331/34
F52Z-12200-D	3.8331/32
F57U-12029-AA	9.6189
F57Z-12029-A	9.6189
F5RZ-12029-C	9.6199S
F5SU-12029-AA	9.6070
F5SU-12029-AB	9.6070
F82U-12029-AA	9.6189
FOJY-12200-A	3.8331/8
FS01-18V05-A	3.8331/37
G 509 193	1.2547
G 516 302	1.2521
KK 150 18 V00	2.8322/22
KK 150 18 V05	3.8331/8
KL01-18V00-A	2.8322/37
KL01-18V05-A	3.8331/33
V83H-F12200-AA	3.8257RS
V83S-F12200-AA	3.7573/12RS
V83S-F12200-AB	3.7573/12RS
V90H-F12106-AA	2.8201PHT
XM34-12106-AA	2.8322/32
XM34-12106-BA	2.8322/21
XM34-12200-BA	3.8331/8
XM34-4608-CA	9.6266S
XS6F-12283B-2C	4.9691
XS6F-12283B-2D	4.9691
XS6F-12283B-4D	4.7208
XS6F-12284B-2D	4.9691
XS6F-12284B-4D	4.7208
XS6F-12286B-2D	4.9691
XS6F-12286B-4D	4.7208
XS6F-12287B-2C	4.9691
XS6F-12287B-2D	4.9691
XS6F-12287B-4D	4.7208
XS8Z-12286-BA	4.9624
XS8Z-12286-CA	4.9624
XS8Z-12286-DA	4.9624
YM21-12029-AA	9.6335
YM21-12029-AB	9.6335
YM21-12029-AC	9.6335
YM21-12029-AD	9.6335
YM2F-12024-AC	9.6432*1
YM2F-12024-AD	9.6432
YM2F-12029-AA	9.6432
YM2F-12029-AB	9.6432
YS6F-12283A-1A	4.9625
YS6F-12283-AA	4.9625
YS6F-12283B-1A	4.7242
YS6F-12283B-9A	4.7242
YS6F-12284A-1A	4.9625
YS6F-12284-AA	4.9625
YS6F-12284B-1A	4.7242
YS6F-12284B-9A	4.7242
YS6F-12286-AA	4.9625
YS6F-12286B-1A	4.7242
YS6F-12286B-9A	4.7242
YS6F-12287A-1A	4.9625
YS6F-12287-AA	4.9625
YS6F-12287B-1A	4.7242
YS6F-12287B-9A	4.7242

FORD AUSTRALIA

6 958 305	9.6070
938F-12024-DA	9.6199S
ADH-2	2.7530/14PHT
ADR-3	3.7573/31
B 593-18-V00 A	2.8322/50

FORD AUSTRALIA

F S90-18-V00	2.7992
F S90-18-V05	3.8002
F5SU-12029-AA	9.6070
F5SZ-12029-A	9.6070
K L01-18-V05 A	3.8331/33

FORD USA

3 880 181	3.8331/33
3 891 726	3.8331/34
3 898 173	2.8322/37
4 132 292	9.6266S
5 008 196	9.6070
6 383 157	9.6189
6 958 305	9.6070
CM5G-12A366-BA	9.6519
F0TZ-12029-A	9.6189
F5SU-12029-AA	9.6070
F5SU-12029-AB	9.6070
XM34-4608-CA	9.6266S

GENERAL MOTORS

01 972 927	2.7573PHT
01 985 771	2.7574PHT
01 986 109	3.7596
01 988 515	3.7597
02 894 488	1.2534HDVS
03 469 032	2.7481PHT
03 469 033	2.7480PHT
03 470 026	1.3455HDVS
03 470 056	3.7593
03 474 227	9.6009
03 474 232	9.6241
03 474 282	9.6241
03 474 283	9.6040
03 479 003	2.7566PHT
06 682 671	3.7512RS
08 983 490	1.2534HDVS
09 117 892	4.9904
09 117 893	4.9904
09 117 894	4.9904
09 117 895	4.9904
09 119 169	4.9506
1 104 082	9.6350
1 104 091	9.6383
1 972 927	2.7573PHT
1 977 958	9.4025
1 978 503	8.3410
1 979 107	9.4025
1 979 511	8.3411
1 979 571	9.4025
1 985 342	9.4025
1 985 771	2.7574PHT
1 986 109	3.7596
1 988 515	3.7597
10 457 153	2.7575PHT
10 458 316	9.6350
10 467 543	2.7575PHT
10 469 006	3.7600
10 482 824	9.4025
10 496 278	2.7575PHT
12 338 891	3.7627
12 635 672	9.6531
12 670 053	9.6531
12 697 989	9.6531
16 140 049	9.4025
16 158 829	9.4025
19 005 212	9.6299
24 420 584	9.6300
25 183 557	4.7249
25 186 687	9.6445
25 195 107	9.6447

GENERAL MOTORS	
25 198 623	9.6447
3 470 026	1.3455HDVS
3 470 056	3.7593
3 470 061	2.7566PHT
3 470 093	3.7593RS
3 470 391	3.7593RS
3 474 221	9.6011
3 474 227	9.6009
3 474 283	9.6040
3 474 600	0.0323
3 479 003	2.7566PHT
3 639 500	9.6509
3 639 845	9.6520
3 648 847	9.6375
30 584 237	9.6092
55 561 655	9.6445
55 573 735	9.6447
55 575 499	9.6447
55 577 898	9.6447
55 579 072	9.6447
55 584 404	9.6445
7 406 087	2.7472PHT
7 426 989	1.2529HDV
7 992 026	1.4683MHDV
7 992 027	1.4143HDV
7 992 201	1.4683MHDV
7 992 202	1.4144HDV
7 992 205	2.8075
7 992 206	2.8070
7 992 207	2.7783
7 992 214	3.8106
7 992 216	3.8107
7 992 217	3.7885
7 992 219	1.2547
7 992 221	1.2521
7 992 222	1.2532HDV
7 992 224	1.2534HDVS
7 992 226	1.2540
7 992 227	1.3655
7 992 228	1.3661
7 992 230	1.4920
7 992 232	1.4932
7 992 234	1.6854
7 992 236	1.2549HDVS
7 992 237	1.2534HDVS
7 992 238	1.3691/11U
7 992 253	0.0856
7 992 265	2.7479PHT
7 992 266	2.7472PHT
7 992 269	2.7476PHT
7 992 271	2.7649PHT
7 992 272	2.7641
7 992 274	2.8159
7 992 275	2.8169
7 992 279	2.8543
7 992 280	2.8181
7 992 281	2.7480PHT
7 992 284	3.7512RS
7 992 285	3.7512RS
7 992 286	3.7514RS
7 992 289	3.7518RS
7 992 290	3.7521RS
7 992 291	3.7691
7 992 292	3.7681
7 992 296	3.8229
7 992 299	3.8237
7 992 300	3.8237
7 992 304	3.8236RS
7 992 318	1.4923
7 992 319	1.4927
7 992 324	1.2529HDV
7 992 326	1.3511HDV
7 992 330	1.2534HDVS
7 992 331	1.4940
7 992 338	1.3667
7 992 340	1.4456HDV

GENERAL MOTORS	
7 992 341	1.4939
7 992 344	1.2562
7 992 346	1.3676
7 992 353	0.0334
7 992 359	0.0334
7 992 396	2.7903
7 992 398	2.7481PHT
7 992 610	2.8303/1
7 992 617	2.7658PHT
7 992 618	2.8625
7 992 619	2.7492PHT
7 992 630	3.7524RS
7 992 632	3.8237
7 992 633	3.8237RS
7 992 636	3.8323
7 992 638	3.7527RS
7 992 639	3.7688RS
7 992 640	3.7514RS
7 992 645	1.2540
7 992 646	1.3691/11U
7 992 648	1.2534HDVS
7 992 650	1.7271
7 992 653	1.3664
7 992 654	1.2529HDV
7 992 655	1.2549HDVS
7 992 658	1.2547
7 992 663	1.2549HDVS
7 992 668	1.3656
7 992 680	0.0856
7 992 850	0.0856
7 992 852	0.0856
7 992 857	2.7658PHT
7 992 859	2.7472PHT
7 992 865	2.7479PHT
7 992 874	3.8254RS
7 992 878	3.7518RS
7 992 883	3.7518RS
7 992 887	3.7514RS
7 992 888	3.7521RS
7 992 892	3.7683RS
7 992 896	3.8229
7 992 951	1.3511HDV
7 992 953	1.4932
7 992 957	1.2534HDVS
7 992 978	2.8186
7 992 979	2.7481PHT
7 992 982	2.7659PHT
7 992 984	2.8078
7 992 985	3.7523RS
7 992 986	3.7526RS
7 992 988	3.7614
7 992 994	3.8323
7 992 996	3.8112
82 044 5	3.7590
9 119 567	9.6408
9 193 022	4.9506
9 198 834	9.6407
9 300 152	3.7545RS
9 977 002	1.2529HDV
9 977 007	1.2529HDV
9 977 008	1.2529HDV
9 977 032	3.7614
9 977 034	3.7525RS
90 006 499	9.4034
90 006 547	3.7556RS
90 008 145	9.4004
90 008 241	4.8514
90 008 612	3.7573/21RS
90 009 490	0.0179/112
90 010 693	2.7566PHT
90 010 695	3.7595RS
90 010 696	1.3455HDVS
90 087 360	3.7526RS
90 113 411	4.8509
90 113 422	2.7499
90 114 106	0.0179/112

GENERAL MOTORS	
90 114 107	3.7525RS
90 114 676	9.4004
90 140 187	9.4004
90 141 495	3.7555RS
90 141 911	3.7556RS
90 230 573	3.7573/27RS
90 230 575	2.7530/10PHT*A
90 240 252	9.6094
90 243 618	9.4036*J
90 277 970	9.6091
90 295 499	9.4005
90 297 423	4.9942
90 297 426	2.7530/21PHT
90 297 570	4.8514
90 336 536	2.7530/27PHT*A
90 337 744	4.7195
90 337 744	4.7199
90 346 324	8.4702*N
90 348 450	2.7480PHT
90 349 877	3.8128RS
90 349 878	2.8099PHT
90 350 021	9.6092
90 350 555	4.8527
90 350 560	4.8956
90 350 748	2.7480PHT*A
90 350 765	2.7530/19PHT
90 350 988	2.7530/26PHT
90 350 997	2.8100PHT
90 360 314	9.4036*J
90 360 315	9.4036*J
90 369 031	2.7530/28PHT
90 369 758	4.8513
90 376 979	3.7703RS
90 384 308	4.8688
90 384 310	4.8688
90 398 282	4.8514
90 398 586	4.8513
90 424 480	9.6407
90 442 011	2.7684PHT
90 442 051	4.8514
90 442 064	4.8527
90 442 356	3.7573/27RS
90 442 358	2.7530/27PHT*A
90 442 404	4.8634
90 442 405	4.8514
90 442 406	4.9237
90 442 410	4.9237
90 442 448	4.8513
90 443 584	4.8688
90 443 687	4.8688
90 443 690	4.9237
90 443 691	4.9237
90 443 692	4.8689
90 443 693	4.8689
90 443 694	4.8689
90 443 900	9.6173
90 449 673	4.7195
90 449 674	4.7195
90 449 675	4.7195
90 449 676	4.7195
90 449 739	9.6040
90 449 740	9.6241
90 458 250	9.6172
90 486 611	4.8634
90 486 612	4.8634
90 487 571	4.9562
90 506 102	9.6289
90 510 386	9.6040
90 510 387	9.6241
90 510 851	4.9531
90 510 857	4.9529
90 510 858	4.9529
90 518 663	4.7199
90 518 664	4.7199
90 518 665	4.7199
90 518 666	4.7199

GENERAL MOTORS	
90 518 760	4.9559
90 518 761	4.9559
90 536 194	9.6408
90 540 398	3.7703RS
90 542 968	4.9529
90 543 059	9.6298
90 543 253	9.6300
90 543 259	4.9559
90 543 260	4.9559
90 543 261	4.9559
90 543 262	4.9559
91 103 092	3.7561RS
91 125 557	3.7630
91 159 920	9.6332
91 159 996	9.6332
91 172 825	3.8331/36
92 061 881	4.9947
92 061 882	4.9947
92 061 883	4.9947
92 061 884	4.9947
93 150 074	1.4942
93 150 077	1.3686
93 150 082	0.0179/96
93 150 083	0.0179/95
93 150 084	0.0617
93 150 091	2.8190
93 150 093	2.7714
93 150 098	2.7490PHT
93 150 099	3.7567RS
93 150 102	3.7534RS
93 150 104	3.7688
93 150 117	0.0334
93 150 118	0.0179/112
93 150 120	3.8242RS
93 150 124	0.0334
93 150 126	2.7493PHT
93 150 134	3.7688RS
93 150 378	2.7479PHT
93 150 379	2.7658PHT
93 150 380	2.7659PHT
93 150 385	2.8176
93 150 392	2.7462
93 150 393	2.7476PHT
93 150 396	3.8236RS
93 150 398	3.8241
93 150 399	3.8242RS
93 150 413	1.2529HDV
93 150 415	1.2549HDVS
93 150 418	1.2549HDVS
93 150 421	1.5084
93 150 455	0.0339
93 150 461	2.8169
93 150 580	1.2534HDVS
93 150 581	1.2549HDVS
93 150 584	1.5084
93 150 586	0.0179/112
93 150 645	3.7689RS
93 150 904	1.3522HDV
93 150 906	2.7499
93 150 907	2.8193
93 150 911	3.7573/16RS
93 161 188	9.6332
93 161 948	9.6332
93 176 701	4.9904
93 177 212	9.6300
93 180 806	9.6298
93 740 920	2.8322/39
93 740 943	2.8322/72
93 740 944	3.8331/39
94 021 067	2.7903
94 022 297	1.4456HDV
94 129 202	2.7593
94 136 766	9.6119
94 174 468	3.7969
94 206 140	3.7614
94 208 408	1.3522HDV

GENERAL MOTORS

94 216 729	3.7614
94 216 730	2.7592
94 221 206	3.7614
94 321 537	2.7630/24
94 322 990	2.7960
94 338 910	3.7630
94 404 545	9.6099
94 404 559	3.7629
94 404 560	2.7622
94 625 744	2.7479PHT
94 632 557	3.7526RS
94 632 558	2.7480PHT
94 840 127	9.6097
94 844 585	3.7627
94 845 144	3.7627
94 845 173	2.7619
94 847 241	3.7629
94 850 617	2.7630/18
94 853 695	9.6099
94 855 135	2.7630/35
95 512 934	9.6342
95 517 924	9.6350
95 528 319	9.6447
96 052 016	3.7630
96 053 294	2.7607
96 055 178	3.7630
96 056 629	3.8331/8
96 058 494	4.9415
96 059 524	2.7593
96 061 556	3.7634
96 061 557	2.7630/15
96 064 787	3.8331/31
96 064 788	2.8322/40
96 066 463	3.7628
96 066 464	2.7623
96 067 826	3.8331/31
96 068 686	2.8322/44
96 288 956	4.7006
96 291 306	4.7007
96 342 284	4.9730
96 460 220	4.9677
96 460 221	4.7247
96 460 222	4.7247
96 460 223	4.7247
96 460 224	4.7247
96 476 983	9.6445
96 497 773	4.9680
96 518 123	4.9634
96 984 145	4.7249
V S10 858	1.2534HDVS
V S10 867	2.7512PHT
V S11 643	2.7472PHT
V S12 013	1.2534HDVS

HITACHI

43J83-17001	2.7948
43S85-16001	3.7973
43S85-17001	2.7941
43S86-16001	3.7973
4461-13301	1.4456HDV
4461-1700	2.7903
4461-2700 B	2.7903
4461-3330 A	1.4456HDV
4461-3330 AY	1.4456HDV
4461-4330 AY	1.4456HDV
44A2-13301	1.4456HDV
44A2-16001	3.7952
44A5-13301	1.4456HDV
44AZ-13301	1.4456HDV
44P88-16001	3.7993
44P88-17001	2.7975
44R80-17001	2.7957
44R84-16002	3.7952
44R86-16001	3.7973

HITACHI

44S88-17001	2.7946
CM11-108	9.6508
CM11-109	9.6429
CM11-111	9.6508
CM11-112	9.6429
CM11-116	9.6503
CM11-118	9.6427
CM11-201	9.6345
CM11-202	9.6284
CM11-207A	9.6357
CM12-100	9.6165
CM1T-205	9.6119
CM1T-209B	9.6116
CM1T-217	9.6116
CM1T-228	9.6247
CM1T-228 A	9.6247
CM1T-228 B	9.6247
CM1T-228 C	9.6247
DIS4-05	9.4051
DIS4-08	9.4072

HOLDEN

10457153	2.7575PHT
10467546	3.7598
10495411	3.7598
10496278	2.7575PHT
1910111060	2.7630/35
1910115120	2.7630/48
1910174050	2.7630/48
1910174180	2.7630/37
1910202010	3.7627
1910211010	3.7629
1910211031	3.7629
1910211370	3.7629
22157H9560	3.7952
2216215M04	2.7957
2243342L00	9.6119
2243342L10	9.6119
3314074010	1.3511HDV
3331070B50	3.8331/19
3331082010	3.7630
3331082610	3.7628
3331086240	3.8331/8
3332160A10	2.7593
3332162E10	2.8322/31
3332163B40	2.8322/32
3332175110	2.7593
3370083010	4.7020
8941744680	3.7969
8942167300	2.7592
8942212060	3.7614
8942389820	3.7627
8943215370	2.7630/24
8943229900	2.7960
8943389100	3.7630
90008612	3.7573/21RS
90243618	9.4036*J
90336536	2.7530/27PHT
90349877	3.8128RS
90350988	2.7530/26PHT
90350997	2.8100PHT
90443584	4.8688
90443687	4.8688
90443690	4.9237
90443692	4.8689
90443900	9.6173
90449739	9.6040
90458250	9.6172
90487571	4.9562
9091902135	9.6097
9091902163	9.6098
9091902164	9.6099
9091922327	4.9209
9091922370	4.9793

HOLDEN

92061881	4.9947
92061882	4.9947
92061883	4.9947
92061884	4.9947
GB819	2.7480PHT
GB835	2.7512PHT
GB838	3.7556RS
GB901	3.7573/31
GB926	2.7512PHT
GD679	2.7593
GD696	3.7628
GH203	1.4456HDV
GH506	2.7903
GH605	3.7952
GH617	2.7957
VS19424	3.7573/27RS
VS21273	3.7573/21RS

HONDA

06302-PT2-000	9.4052
06302-PT2-A00	9.4052
06302-PT3-000	9.4052
06302-PT3-A00	9.4052
06302-PT-A00	9.4052
30102-590-075	2.7903
30102-634-005	2.7903
30102-634-0050	2.7903
30102-634-0051	2.7903
30102-P0A-A01	2.7982
30102-P0A-A02	2.7982
30102-P12-A01	2.7976
30102-P1J-E01	2.8106
30102-P2A-J01	2.7993
30102-P2M-A01	2.7982
30102-P45-G02	2.7982
30102-P54-006	2.7968
30102-PA1-732	2.7911
30102-PA6-924	2.7911
30102-PC1-004	2.7911
30102-PCB-004	2.7968
30102-PD2-006	2.7922
30102-PD2-016	2.7922
30102-PEL-J01	2.7968
30102-PI2-A01	2.7976
30102-PM3-015	2.7971
30102-PM3-025	2.7971
30102-PM3-035	2.7971
30102-PM3-045	2.7971
30102-PM5-A02	2.7969
30102-PM5-A03	2.7969
30102-PM5-A04	2.7969
30102-PM5-A05	2.7969
30102-PM7-006	2.7969
30102-PM7-016	2.7969
30102-PM7-036	2.7969
30102-PR3-003	2.7969
30102-PR3-006	2.7969
30102-PR3-026	2.7969
30102-PR4-A02	2.7969
30102-PT2-006	2.7968
30102-PT2-016	2.7968
30102-PT2-026	2.7968
30102-PT3-A12	2.7976
30102-PV1-A03	2.7984
30102-PV1-A04	2.7984
30102-PV1-A05	2.7984
30103-657-005	3.7952
30103-P01-005	3.7981
30103-P08-003	3.7995
30103-P0A-A01	3.7998
30103-P2A-J01	3.8002
30103-P72-003	3.7995
30103-PA1-732	3.7956
30103-PA1-733	3.7956

HONDA

30103-PAA-A01	3.7998
30103-PAI-732	3.7956
30103-PC3-822	3.7956
30103-PDA-E01	3.7998
30103-PE1-731	3.7973
30103-PE9-006	3.7956
30103-PM0-B01	3.7981
30103-PM3-015	3.7981
30103-PM3-025	3.7981
30103-PM5-702	3.7982
30103-PM5-703	3.7982
30103-PM5-A02	3.7982
30103-PM5-A04	3.7982
30103-PR3-006	3.7982
30103-PT2-016	3.7992
30103-PW0-G02	3.7997RS
30103-PW0-G03	3.7997RS
30105-590-075	1.4456HDV
30105-634-005	1.4456HDV
30105-634-0051	1.4456HDV
30105-657-005	1.4456HDV
30105-679-005	1.4456HDV
30120-PM-A01	9.4052
30120-PR3-003	9.4052
30120-PT2-004	9.4052
30120-PT3-003	9.4052
30120-PT3-004	9.4052
30130-P54-006	9.4052
30130-PR3-006	9.4052
30130-PT2-006	9.4052
30500-P01-005	9.6116
30500-P0A-A01	9.6247
30500-P0H-A01	9.6247
30500-PAA-A01	9.6247
30500-PCA-003	9.6247
30500-PDA-E01	9.6247
30500-PE0-006	9.6112
30500-PH1-026	9.6112
30500-PM3-005	9.6116
30500-PM3-015	9.6116
30500-PM5-A02	9.6113
30500-PM5-A03	9.6113
30500-PR4-A02	9.6115
30500-PT0-005	9.6116
30510-P73-A01	9.6114
30510-P73-A02	9.6114
30510-PT2-006	9.6114
30520-P8E-A01	9.6357
30520-P8E-S01	9.6357
30520-P8F-A01	9.6357
30520-P8F-A02	9.6357
30520-PDF-E01	9.6068
30520-PGK-A01	9.6357
30520-PH7-006	9.6111
30520-PH7-016	9.6111
30520-PVF-A01	9.6357
30520-PVJ-A01	9.6357
30520-PWA-003	9.6429
30520-PWA-013	9.6429
30520-PWA-S01	9.6429
30520-RB0-003	9.6503
30520-RB0-013	9.6503
30520-RB0-S01	9.6503
30520-RCA-A01	9.6357
30520-RCA-A02	9.6357
30520-RCA-S01	9.6357
30520-REA-Z01	9.6429
30520-RJA-A01	9.6357
30520-RNA-A01	9.6422
30521-PWA-003	9.6508
30521-PWA-013	9.6508
30521-PWA-S01	9.6508
30521-RBJ-003	9.6427
30521-RBJ-013	9.6427
30521-RBJ-S01	9.6427
30521-REA-Z01	9.6508

HONDA

32700-P0D-000	4.9711
32700-P0K-G00	4.9711
32700-P1J-E01	4.9686
32700-P5K-003	4.9711
32700-P5N-G01	4.9711
32700-PEL-004	4.9699
32700-PHK-003	4.9709
32700-PT0-000	4.9711
32700-PT0-G00	4.9711
32701-P14-A00	4.9711
32701-PT0-000	4.9711
32702-P14-A00	4.9711
32702-PT0-000	4.9711
32703-P14-A00	4.9711
32703-PT0-000	4.9711
32704-P14-A00	4.9711
32704-PT0-000	4.9711
32722-P2A-000	4.9702
32722-P2A-003	4.9702
32722-P2A-J00	4.9702
32722-P2A-J01	4.9702
32722-P2F-A02	4.9702
32722-P2F-A03	4.9702
32722-P75-A01	4.9709
32722-PT3-A00	4.9711
33105-590-075	1.4456HDV
8-94174-468-0	3.7969
8-94322-990-0	2.7960

HYUNDAI

27110-02503	2.8322/21
27110-02750	2.8322/70
27110-21020	2.8303/1
27110-21021	2.8303/1
27110-21060	2.8303/1
27110-22000	2.7524PHT
27110-32810	2.8303/1
27110-36010	2.8322/16
27115-21020	3.8323
27115-32500	3.8331/7
27115-35000	3.8331/9
27120-11000	2.8303/1
27131-02750	3.8331/38
27131-11000	3.8323
27131-22000	3.7573/21RS
27131-32810	3.8331/7
27131-35010	3.8331/9
27132-11000	3.8323
27135-11000	1.5084
27180-22000	8.2744
27300-3F100	9.6456
27301-02100	9.6487*5
27301-02502	9.6294*U
27301-02600	9.6396*5
27301-02630	9.6396*5
27301-02800	9.6396*5
27301-03000	9.6479*5
27301-03010	9.6479*5
27301-03015	9.6479*5
27301-03035	9.6479*5
27301-03110	9.6512
27301-03200	9.6522
27301-03HA0	9.6547
27301-04000	9.6514
27301-04110	9.6538
27301-22600	9.6485
27301-23700	9.6481*5
27301-23710	9.6481*5
27301-23900	9.6481*5
27301-26600	9.6486
27301-2B000	9.6395
27301-2B010	9.6443
27301-2B100	9.6511

HYUNDAI

27301-3C000	9.6392
27310-02611	9.6487
27310-02612	9.6487
27310-02620	9.6396
27310-02630	9.6396
27310-03010	9.6479
27310-03020	9.6479
27310-22600	9.6485
27310-22600	9.6486
27310-22610	9.6485
27310-26600	9.6486
27310-37110	9.6479
27310-37120	9.6489
27310-37130	9.6489
27420-02610	4.7235
27420-03011	4.7255
27420-23700	4.9385
27420-37200	4.7236
27420-37310	4.7236
27430-02610	4.7235
27430-03000	4.7255
27430-03011	4.7255
27430-23700	4.9385
27430-37200	4.7236
27440-02610	4.7235
27440-03000	4.7255
27440-03011	4.7255
27440-23700	4.9385
27440-37200	4.7236
27440-37310	4.7236
27450-02610	4.7235
27450-03000	4.7255
27450-03010	4.7255
27450-23700	4.9385
27450-37200	4.7236
27460-37200	4.7236
27460-37310	4.7236
27470-37200	4.7236
27501-02A00	4.7120
27501-02D00	4.7235
27501-02H00	4.7119
27501-22B00	4.7119
27501-22B10	4.7119
27501-23A00	4.9385
27501-23B00	4.9385
27501-23B01	4.9385
27501-23B70	4.9385
27501-26A00	4.7111
27501-26C00	4.7111
27501-26D00	4.7111
27501-33A00	4.9401
27501-37B00	4.7236
27501-38B00	4.7241
AA100-18100B	9.6119*1
KK150-18V00A	2.8322/22

INFINITI

22157-46N12	3.8331/36
22157-70J00	3.7985
22162-0M811	2.8322/51
22162-53J00	2.7973
22448-2V70A	9.6526
22448-HG00A	9.6526
22448-HG00B	9.6526
22448-HG00C	9.6526
22448-HG00E	9.6526
22448-JA00C	9.6452
22448-JA10C	9.6433
22448-JA11C	9.6433

INNOCENTI

39322140	9.6001D
46543562	9.6046
638326146	1.2549HDVS
638326383	3.7525RS
6553206203	1.3522HDV
6553206400	3.7634
6553221201	2.7594
6553221203	1.3511HDV
6553221400	3.7614
659321119	2.8078
659321324	3.8112
7735397	4.8655
7746151	9.6048
7746153	9.6058
82361915	3.8247RS
9622889780	9.6088
9938360	2.8204PHT
9940095	9.4020
9940429	8.4977/1
9941693	8.4976M
9943506	3.8259
9944668	2.8215PHT
9944794	2.8201PHT
9946355	2.8214PHT
9946356	3.8260

ISUZU

GR 2384	1.3522HDV
2-23115-15	1.4456HDV
5-82311215-0	2.7903
5-86202572-0	2.7982
5-86202573-0	3.7998
5-86206161-0	9.6247
5-86207198-0	9.6247
8-01979571-0	9.4025
8-10495411-0	3.7598
8-10496278-0	2.7575PHT
8-16140049-0	9.4025
8-23115-14	1.4456HDV
8-23115-15	1.4456HDV
8-23212-14	2.7903
8-94136766-0	9.6119
8-94174468-0	3.7969
8-94201644-0	1.3511HDV
8-94206140-0	3.7614
8-94206144-0	1.3522HDV
8-94206145-0	1.3522HDV
8-94208-408	1.3522HDV
8-94216729-0	3.7614
8-94216730-0	2.7592
8-94221206-0	3.7614
8-94221-206-00	3.7614
8-94238982-0	3.7627
8-94321537-0	2.7630/24
8-94322990-0	2.7960
8-94338910-0	3.7630
8-94404545-0	9.6099
8-94404559-0	3.7629
8-94404560-0	2.7622
9-40210-67	2.7903
9-40222-97	1.4456HDV
9-42084-08	1.3522HDV
9-42212-06	3.7614
9-82311214-0	2.7903
9-82311515-0	1.4456HDV
9-82311518-0	1.4456HDV

IVECO

500309816	9.6245
504142675	9.6342
8024220	9.6213

JAGUAR

AEU 1501	3.8112
AEU 1502	2.8085PHT
JLM 150	2.8098PHT
JLM 1909	2.8210PHT
JLM 1911	3.8258
JLM 381	3.8127RS
JLM 838	2.7481PHT
JLM 839	3.7573/13RS
JLM 9522	1.4689
JLM 9528	2.8085PHT
JLM 9623	3.8112
LNA 1508AA	9.6070

JEEP

33003389	3.7892
33004024	2.7793PHT
46337742	9.6449
4728190	4.7181
4728190AC	4.7181
55224110	9.6449
55229959	9.6449
55263679	9.6449
55270217	9.6449
56026876	2.7793PHT
56027075	3.7892
68298269AA	9.6449
K68298228AA	9.6449
K68298269AA	9.6449
K68436928AA	9.6449
T1031135	9.6007

KIA

0K011-18100	9.6068
0K201-18140	4.9398
0K201-18150	4.9398
0K201-18-150A	4.9398
0K247-18-160A	4.9841
0K247-18-160B	4.9841
0K247-18-180A	4.9841
0K247-18-180B	4.9841
0K2A3-18-160A	4.9841
0K2A3-18-180A	4.9841
0K2BW-18160	4.9841
0K2BW-18180	4.9841
0K30A-18-140A	4.9851
0K30B-18140	4.9851
0K30E-18140	4.7239
0K30F-18140	4.7239
27300-3F100	9.6456
27301-02700	9.6489
27301-02710	9.6489
27301-03010	9.6479*5
27301-03100	9.6479*5
27301-03110	9.6512
27301-03200	9.6522
27301-03HA0	9.6547
27301-04000	9.6514
27301-04110	9.6538
27301-23700	9.6481*5
27301-23710	9.6481*5
27301-23720	9.6481*5
27301-23900	9.6481*5
27301-26600	9.6486
27301-2B000	9.6395
27301-2B010	9.6443
27301-2B100	9.6511
27301-3C000	9.6392
27310-02611	9.6487
27310-03010	9.6479
27310-03020	9.6479

KIA

27400-2X140	4.7239
27401-2X000	4.9851
27420-23700	4.9385
27420-26700	4.7111
27420-37310	4.7236
27430-23700	4.9385
27430-26700	4.7111
27430-37200	4.7236
27440-23700	4.9385
27440-26700	4.7111
27440-37310	4.7236
27450-23700	4.9385
27450-26700	4.7111
27450-37200	4.7236
27460-37310	4.7236
27470-37200	4.7236
27501-02H00	4.7119
27501-23B70	4.9385
27501-26D00	4.7111
27501-33A00	4.9401
27501-38B00	4.7241
AA100-18-100B	9.6119*1
KK137-18-140A	4.9398
KK137-18-150A	4.9398
KK137-18V00	2.8322/21
KK150-18V00	2.8322/22
KK150-18-V00A	2.8322/22
KK150-18V05	3.8331/8
KK150-18-V05A	3.8331/8
MB593-18V00	2.8322/50
MB593-18-V00A	2.8322/50
MB593-18V05	3.8331/32
MB6BF-18V05	3.8331/32
MF220-18-V00A	2.8322/21

LADA

21010-3706020-10	3.8714RS
21010-3706500-00	2.8625
21010-3706800-10	1.7270
2101-3705000-02	9.6001D
21013-7050560	9.6001D
2101-3705060-00	9.6001D
21013-7060010-10	3.8714RS*C
2101-3706020	3.8714RS
2101-3706020-10	3.8714RS
2101-3706500	2.8625
2101-3706800	1.7271
2101-3706800-10	1.7270
2107-3706020-10	3.8714RS
2107-3706020-20	3.8714RS
2107-3706500	2.8625
2108-3706020	3.8716RS
2108-3706500	2.8627PHT
2108-3706500-10	2.8627PHT
2108-3734910-10	9.4004
22 43 324 28R	9.6513
22 43 361 34R	9.6496
3037-06020	3.8714RS
3700-3118583	9.4004
38-37060-20	3.8714RS
38-37065-00	2.8625
82 00 765 882	9.6332

LANCIA

4158493	9.6001D
4386221	9.6003
4460205	9.6003
46403328	9.6214
46413088	4.9503
46425912	4.9504

LANCIA

46446039	9.6245
46472440	9.6245
46473849	9.6284
46474814	4.9505
46480361	9.6245
46543562	9.6046
46548037	9.6046
46749624	4.9451
46777288	9.6342
55200112	9.6323
55202897	4.9451
55208723	9.6323
55214926	9.6449
55229959	9.6449
55246099	9.6342
60562701	9.6213
60805420	9.6046
60809492	9.6046
60809702	2.7530/6PHT
60810690	9.6213
7080442	2.7479PHT
7588436	9.8003
7612954	9.6026
7625943	4.8456
7626232	9.6046
7646974	9.6058
7648797	9.6068
7663177	9.6008
7672018	9.6046
7700267693	3.7573/19RS
7703382	4.8700
7735397	4.8655
7742005	4.8694
7742689	4.8456
7746151	9.6048
7760523	4.9363
7776810	4.8616
7785350	4.8888
7787458	4.8889
7789346	9.6245
9463264180	9.6308
9607405480	9.6088
9622889780	9.6088
9634131380	9.6308
9924733	3.7683RS
9927962	3.7525RS
9934266	0.0323
9934728	2.8193
9934729	8.4961/1
9935150	1.3691/1
9936023	3.8247RS
9936027	2.8198PHT
9936331	8.4963/1
9936735	2.7658PHT
9937767	3.8254RS
9938173	3.8255RS
9938360	2.8204PHT
9939707	3.7523RS
9939786	8.4980M
9939787	2.8201PHT
9939788	8.4976M
9939789	2.8209PHT
9940095	9.4020
9940302	3.7694
9940428	3.8257RS
9940429	8.4977/1
9941721	2.7680PHT
9942040	9.4029
9943506	3.8259
9944407	3.8260
9944576	2.8214PHT
9944668	2.8215PHT

LAND ROVER

00000A00069	2.7723PHT
00000A00070	3.7758
00000A00071	1.3724
00000A00072	0.0397
1748018	9.6252
262704	3.8107
269987	1.4683MHDV
566859	2.8075
600328	2.8070
605190	2.8091PHT
AUU1675	4.9900
AUU1676	4.9900
AUU1677	4.9900
AUU1678	4.9900
ERR6045	9.6068
ERR6566	9.6068*1
LR022494	9.6252
NEC000040	9.6252
NEC100630	9.6274
NEC101000L	9.6252
NEC101010L	9.6313
NGC103570	4.9900
NGC103740	4.7107
NGC103750	4.7107
NGC103760	4.7107
NGC103780	4.7107
NGC103800	4.7107
NGC104170L	4.9889
NGC500370	4.9900
NGC500380	4.9900
NGC500390	4.9900
NGC500400	4.9900
NGC500410	4.9900
NJD10010	2.8093PHT
NJE10003	3.8129RS
PRC9858	9.6001D
RTC3197	2.8091PHT
RTC3199	3.8122
RTC3270	1.4683MHDV
RTC3278	2.8078
RTC3282	1.4689
RTC3295	2.7649PHT
RTC3313	1.4683MHDV
RTC3339	3.8112
RTC3341	3.7691
RTC3473	0.0334
RTC3526	0.0334
RTC3612	3.8106
RTC3613	3.8114
RTC3614	3.8112
RTC3616	3.7691
RTC3618	3.8121
RTC3881	1.4683MHDV
RTC4932	2.7654PHT
RTC4933	3.7691
RTC4935	0.0334
RTC5629	9.6001D
RTC5946	1.4689
RTC5947	1.4689
RTC6627	1.4689
RTC6629	3.8122
STC1857	3.8122
STC8368	2.8091PHT

LEXUS

90919-02185	9.6102
90919-02197	9.6103
90919-02208	9.6103
90919-02244	9.6366
90919-02248	9.6358
90919-02250	9.6437
90919-02251	9.6438
90919-02255	9.6438
90919-02256	9.6437

LEXUS

90919-02258	9.6436
90919-02260	9.6358
90919-02266	9.6366
90919-A2003	9.6437
90919-A2004	9.6438
90919-A2005	9.6437
90919-A2007	9.6438
90919-C2004	9.6437

MARUTI

33102-75110	1.3511HDV*F
33310-82110	3.7630
33321-78110	2.7607

MASERATI

313220203	3.8254RS
6313220203	3.8254RS

MAZDA

0000-18-135A	4.9760
0324-24-310	2.8303/1
0324-24-312	3.8323
0494-24-314	1.5084
1E03-18-10X	9.6432*1
1E03-18-10XA	9.6432*1
1E04-18-10X	9.6432
1E05-18-100	9.6199
1E05-18-100A	9.6199
1E05-18-100B	9.6432
1E06-18-100	9.6199S
1F20-18-100	9.6432
1F20-18-100A	9.6432
3710-24-310	2.7903
3763-24-314	1.5084
3823-24-314	1.5084
3879-24-314	1.5084
8BBG-18-140	4.9398
8BBY-18-140	4.9398
8BGP-18-140	4.9760
8BGP-18-140A	4.9760
8BGP-18-140B	4.9760
8BGP-18-140C	4.9760
AM01-24-312	3.8323
AM15-18-V00	2.8303/1
B303-18-V00	2.8322/22
B303-18-V05	3.8331/8
B33G-18-140A	4.9741
B33G-18-140B	4.9741
B3B1-18-V00	2.8322/22
B3C7-18-V00	2.7988
B3C7-18-V05	3.7994
B3M5-18-V00	2.8322/54
B3S5-18-V00	2.8322/50
B541-18-V00	2.8322/31
B541-18-V20	9.4073*J
B593-18-V00	2.8322/50
B593-18-V00A	2.8322/50
B593-18-V05	3.8331/32
B601-18-V05	3.7973
B616-18-V00	2.8322/25
B61P-18-140C	4.9745
B61V-18-V05	3.8331/19
B69F-18-140A	4.9231
B69F-18-140B	4.9231
B6BF-18-140A	4.9231
B6BF-18-140B	4.9231
B6BF-18-V05	3.8331/32
B6MC-18-140B	4.9745

MAZDA

B6S7-18-100	9.6266S
B6S7-18-10XA	9.6133
B6S8-18-10XA	9.6133
BP05-18-V00	2.8322/21
BPE8-18-140	4.9745
BPE8-18-140A	4.9745
C201-18-100	9.6432
C201-18-100A	9.6432
C201-18-100B	9.6432
C201-18-160A	4.7242
C201-18-170A	4.7242
C201-18-180A	4.7242
C201-18-190A	4.7242
C401-18-100	9.6381
C401-18-100A	9.6381
E594-24-310	2.8322/9
E5D5-18-V00A	2.8322/18
F201-18-V00	2.8322/25
F220-18-V00A	2.8322/21
F220-18-V05	3.8331/13
F2G8-18-V00	2.8322/21
F829-18-V00	2.8322/32
F829-18-V05	3.8331/8
F855-24-312	3.8323
FE01-24-310	2.8322/9
FE01-24-310A	2.8322/9
FE1H-18-V00	2.8322/17
FE1H-18-V00A	2.8322/17
FE2S-18-V00	2.8322/32
FE2S-18-V00A	2.8322/32
FE2S-18-V05	3.8331/8
FEEN-18-V00	2.8322/32
FEH1-18-V00A	2.8322/17
FEJK-18-10X	9.6266S
FP13-18-140A	4.8884
FP13-18-140B	4.8884
FP39-18-140	4.9740
FP39-18-140A	4.9740
FP85-18-140A	4.9767
FP86-18-140A	4.9767
FS01-18-140	4.8884
FS01-18-V05	3.8331/37
FS01-18-V05A	3.8331/37
FS05-18-V00	2.7977
FS05-18-V05	3.7994
FS07-18-V05	3.8331/31
FS07-18-V05A	3.8331/31
FS90-18-V00	2.7992
FS90-18-V05	3.8002
FSD7-18-100	9.6035
FSD7-18-140B	4.9739
G601-18-V05	3.8331/8
G602-18-V00	2.8322/22
G609-18-V00	2.8322/21
H612-24-310	2.8303/1
K834-18-140A	4.9760
KF33-18-140C	4.9760
KF33-18-140D	4.9760
KF33-18-140E	4.9760
KF34-18-V00	2.8322/49
KF34-18-V05	3.8331/34
KF34-18-V05A	3.8331/34
KL01-18-140C	4.9760
KL01-18-V00	2.8322/37
KL01-18-V00A	2.8322/37
KL01-18-V05	3.8331/33
KL01-18-V05A	3.8331/33
KL47-18-140B	4.9760
KL47-18-140C	4.9760
KLG4-18-100A	9.6189
L813-18-140B	4.7245
L813-18-140C	4.7245
LF01-18-100	9.6432
LF01-18-100A	9.6432
LF16-18-100	9.6380
LF16-18-100A	9.6380

MAZDA

LF16-18-100B	9.6380
P51B-18-100	9.6527
PE01-18-100	9.6527
PE20-18-100	9.6527
PE20-18-100A	9.6527
PYFS-18-100	9.6527
YF09-18-10X	9.6432
Z501-18-140	4.9738
Z501-18-140A	4.9738
ZJ01-18-100	9.6414
ZJ01-18-100A	9.6414
ZJ20-18-100	9.6416
ZJ20-18-100A	9.6416
ZL01-18-140A	4.9729
ZZL0-18-100	9.6189
ZZM0-24-310	2.7793PHT
ZZM0-24-312	3.7892
ZZM1-24-310	2.7793PHT
ZZM2-24-310	2.7793PHT
ZZM7-18-100	9.6189

MERCEDES-BENZ

A 000 150 04 80	9.6217
A 000 150 05 80	9.6217
A 000 150 15 80	9.6320
A 000 150 19 80	9.6387
A 000 150 25 80	9.6320
A 000 150 26 80	9.6387
A 000 150 27 80	9.6387
A 000 150 29 80	9.6320
A 000 158 06 02	2.7462
A 000 158 07 02	2.7472PHT
A 000 158 07 90	1.2529HDV
A 000 158 15 31	3.7518RS
A 000 158 16 02	2.7472PHT
A 000 158 18 02	2.7479PHT
A 000 158 18 90	1.2529HDV
A 000 158 20 31	3.7518RS
A 000 158 20 90	1.2521
A 000 158 21 31	3.7521RS
A 000 158 22 31	3.7524RS
A 000 158 22 90	1.2549HDVS
A 000 158 23 31	3.7523RS
A 000 158 23 90	1.2534HDVS
A 000 158 24 90	1.2534HDVS
A 000 158 25 02	2.7472PHT
A 000 158 26 31	3.7534RS
A 000 158 27 02	2.7492PHT
A 000 158 27 31	3.7525RS
A 000 158 28 02	2.7479PHT
A 000 158 28 90	1.2562
A 000 158 31 31	3.7525RS
A 000 158 33 31	3.7561RS
A 000 158 34 02	2.7490PHT*A
A 000 158 34 31	3.7555RS
A 000 158 35 31	3.7560RS
A 000 158 35 90	1.2562
A 000 158 36 02	2.7492PHT*A
A 000 158 36 31	3.7549RS
A 000 158 37 31	3.7573/12RS
A 000 158 37 90	1.2562
A 000 158 39 31	3.7573/21RS
A 000 158 39 90	1.2562
A 000 158 40 03	9.6080
A 000 158 40 31	3.7573/26RS
A 000 158 40 90	1.2534HDVS
A 000 158 41 02	2.7492PHT*A
A 000 158 42 02	2.7490PHT*A
A 000 158 42 31	3.7573/21RS
A 000 158 43 02	2.7508PHT*A
A 000 158 44 02	2.7523PHT*A
A 000 158 45 03	9.6078
A 000 158 48 02	2.7530/4PHT

MERCEDES-BENZ

A 000 158 48 03	9.6078
A 000 158 49 02	2.7530/4PHT*A
A 000 158 50 03	9.6078
A 000 158 52 02	2.7530/9PHT*A
A 000 158 53 03	9.6078
A 000 158 54 03	9.6078
A 000 158 56 03	9.6079
A 000 158 58 03	9.6079
A 000 158 61 03	9.6078
A 000 158 62 03	9.6078
A 000 158 64 03	9.6079
A 000 158 70 03	9.6216
A 000 158 71 03	9.6216
A 000 158 73 03	9.6317
A 000 158 75 03	9.6216
A 000 158 77 03	9.6314
A 000 158 78 03	9.6317
A 102 150 53 18	4.9657
A 102 150 54 18	4.9654
A 102 150 54 18	4.9657
A 102 150 55 18	4.9654
A 102 150 55 18	4.9657
A 102 150 56 18	4.9654
A 102 150 56 18	4.9657
A 102 150 58 18	4.9657
A 102 150 59 18	4.9654
A 103 158 00 02	2.7530/7PHT
A 103 158 02 31	3.7573/25RS
A 103 158 03 31	3.7573/25RS
A 112 150 01 18	4.9649
A 112 150 02 18	4.9649
A 112 150 06 18	4.9649
A 112 150 07 18	4.9649
A 119 158 01 31	3.7573/46RS
A 119 158 02 31	3.7573/46RS
A 119 158 03 31	3.7573/46RS
A 266 150 01 18	4.7234
A 266 150 02 18	4.7234
A 266 150 06 18	4.7234
A 266 150 07 18	4.7234
A 266 150 10 18	4.7232
A 266 150 11 18	4.7232
A 266 150 12 18	4.7232
A 266 150 13 18	4.7232
A 272 906 00 60	9.6387
A 274 906 06 00	9.6526
A 274 906 07 00	9.6526
A 274 906 14 00	9.6526
A 281 906 00 00	9.6513

MG

NEC100630	9.6274
NEC101000	9.6313
NEC101010	9.6313

MINI

12 12 1 496 996	4.9719
12 12 1 496 997	4.9719
12 12 1 496 998	4.9719
12 12 1 496 999	4.9719
12 12 7 513 032	4.9719
12 12 7 513 033	4.9719
12 12 7 513 034	4.9719
12 12 7 513 035	4.9719
12 13 5 A06 753	9.6375
12 13 7 550 012	9.6375
12 13 7 551 049	9.6375
12 13 7 562 744	9.6375
12 13 7 571 643	9.6375
12 13 7 575 010	9.6375
12 13 7 594 596	9.6375
12 13 7 594 937	9.6375

MINI

12 13 7 594 938	9.6375
12 13 7 619 385	9.6532
12 13 8 615 991	9.6532
12 13 8 616 153	9.6375
12 13 8 643 360	9.6532
12 13 8 647 463	9.6532
12 13 8 657 273	9.6375
12 13 8 678 438	9.6532
7 571 643	9.6375
8 643 360	9.6532
8 647 463	9.6532
82 11 0 393 996	4.9719
82 11 0 404 488	4.9719

MITSUBISHI

08605	2.8303/1
1832A016	9.6397
1832A028	9.6403
27110-21060	2.8303/1
27110-32810	2.8303/1
27131-32810	3.8331/7
49371	2.8322/45
62571	2.8322/43
J170	9.4073
MD134754	4.9401
MD183124	4.9278
MD192995	4.9401
MD193015	4.9278
MD198216	4.9278
MD310297	4.9278
MD315902	4.9278
MD332343	4.9753
MD334017	4.9278
MD334021	4.9278
MD334026	4.9278
MD334039	4.9278
MD334043	4.9764
MD336862	4.9764
MD338249	4.9344
MD338624	4.9764
MD343245	4.7251
MD362276	4.9882
MD365102	4.9883
MD371794	4.9344
MD371980	4.9344
MD602756	2.8303/1
MD602758	3.8323
MD602949	2.8303/1
MD604338	3.7614
MD604411	2.7617
MD607101	1.5084
MD607394	1.5085
MD607402	1.5085
MD607597	2.8303/1
MD611151	3.8331/7
MD611459	3.8331/9
MD611526	2.8322/16
MD611604	2.8303/1
MD611686	2.8303/1
MD611757	3.8331/9
MD611850	3.8323
MD618187	3.8331/31
MD618210	2.8303/1
MD618283	2.8322/58
MD618284	3.8331/19
MD618297	2.8322/34
MD618364	2.8322/31
MD618374	2.8322/35
MD618431	2.8322/43
MD618555	2.8322/38
MD618556	3.8331/37
MD618760	2.8322/47
MD618977	2.8322/38

MITSUBISHI

MD618979	2.8322/47
MD619000	3.8331/36
MD619050	2.8322/61
MD619092	2.8322/69
MD619176	2.8322/43
MD619186	2.8322/58
MD619216	3.8331/36
MD619272	3.8331/31
MD619273	3.8331/37
MD619274	3.8331/34
MD619354	3.8331/36
MD619363	2.8322/68
MD619387	2.8322/69
MD619388	2.8322/68
MD619434	3.8331/36
MD619468	2.8322/68
MD619637	3.8331/36
MD620555	3.7630
MD626374	2.8322/35
MN195805	9.6405
T100T20871	1.5084
T100T20872	1.5084
T100T21271	1.5085
T100T21272	1.5084
T12271	3.8323
T13371	3.8330
T15672	3.8331/9
T15673	3.8331/9
T16571	3.8331/7
T16871	3.8331/8
T17371	3.8331/10
T232T42271	2.8303/1
T232T42471	2.8303/1
T232T42771	2.8303/1
T232T48972	2.8322/58
T31771	2.8322/39
T42271	2.8303/1
T43574	2.8322/9
T43576	2.8322/9
T43871	2.8303/1
T44771	2.8322/20
T45071	2.8322/18
T45372	2.8322/17
T45671	2.8322/25
T46371	2.8322/14
T46382	2.8322/14
T46671	2.8322/22
T46771	2.8303/1
T46772	2.8303/1
T46971	2.8322/21
T47371	2.8322/22
T48171	2.8322/32
T48271	2.8322/36
T48372	2.8322/31
T61471	2.8322/16
T880T12271	3.8323
T880T13371	3.8330
T880T21572	3.8331/19

NISSAN

15501-208	2.7903
22102-01M11	0.0675/31
22145-18005	1.4456HDV
22145-18005A	1.4683MHDV
22145-71301	1.4456HDV
22145-73415	1.5085
22145-73416	1.5084
22145-78506	1.4456HDV
22145-89900	1.5085
22145-89901	1.5085
22145-89905	1.5085
22145-U6001	1.4456HDV
22145-U6002	1.4456HDV

NISSAN

22149-B8900	3.7952
22149-N3602	3.7952
22157-03A00	3.7986
22157-03P10	3.8331/9
22157-0M512	3.8331/36
22157-0M810	3.8331/36
22157-10B10	3.8323
22157-17B00	3.7970
22157-17B10	3.8331/10
22157-18F00	3.7966
22157-1E410	3.8331/18
22157-20R00	3.7966
22157-21E00	3.7970
22157-21E01	3.7970
22157-21F01	3.7970
22157-23G15	3.8330
22157-27M02	3.7970
22157-27M15	3.8331/10
22157-2J210	3.8331/36
22157-30R00	3.7985
22157-40F00	3.7970
22157-46N11	3.8331/36
22157-46N12	3.8331/36
22157-4B000	3.8002
22157-50Y10	3.8331/31
22157-53F11	3.8331/18
22157-54C01	3.7985
22157-55K10	3.8331/19
22157-55Y00	3.7970
22157-70J00	3.7985
22157-70J01	3.7985
22157-71J00	3.7970
22157-71J10	3.7986
22157-72B00	3.8002
22157-73C00	3.8130
22157-77A01	3.7986
22157-78A00	3.7970
22157-99B01	3.8130
22157-99B03	3.8130
22157-H3602	3.7952
22157-H9560	3.7952
22157-KA030	3.7973
22157-M5610	3.8330
22157-N3602	3.7952
22157-R9006	3.8323
22157-R9007	3.8323
22157-U6001	3.7952
22157-U6091	3.7952
22157-U6091MP	3.7952
22157-U6094	3.7952
22157-U6094DY	3.7952
22162-01B01	2.7946
22162-03M00	2.7989
22162-06W00	2.7940
22162-06W03	2.7940
22162-06W03MP	2.7940
22162-06W04	2.7940
22162-06W04MP	2.7940
22162-06W05	2.7940
22162-06W06	2.7940
22162-0M200	2.7989
22162-0M300	2.7989
22162-0M810	2.8322/51
22162-0M811	2.8322/51
22162-11E07	2.7963
22162-12E01	2.7946
22162-15M00	2.7957
22162-15M01	2.7957
22162-15M01MP	2.7957
22162-15M02	2.7957
22162-15M02MP	2.7957
22162-15M03	2.7957
22162-15M03MP	2.7957
22162-15M04	2.7957
22162-17M00	2.7946
22162-17M01	2.7946

NISSAN

22162-17M02	2.7946
22162-17M03	2.7946
22162-17M04	2.7946
22162-17M05	2.7946
22162-18F01	2.7940
22162-1S700	2.7989
22162-21007	2.7903
22162-21F03	2.7946
22162-23G15	2.8322/14
22162-25G10	2.8322/20
22162-25G11	2.8322/20
22162-3S500	2.7989
22162-40F00	2.7946
22162-40F10	2.8322/14
22162-41B00	2.8105
22162-41L11	2.8322/26
22162-42L10	2.8322/26
22162-42L11	2.8322/26
22162-52A01	2.7957
22162-52H20	2.8322/26
22162-53J00	2.7973
22162-70F10	2.8322/52
22162-70F11	2.8322/52
22162-70J00	2.8102
22162-71300	2.7903
22162-71312	2.7903
22162-71J00	2.8103
22162-71J10	2.8101PHT
22162-72Y10	2.8322/55
22162-73C00	2.7979
22162-78A00	2.7946
22162-78A10	2.8322/14
22162-82J00	2.8105
22162-94M01	2.8101PHT
22162-94M11	2.8322/36
22162-99B00	2.8104
22162-A3514	2.8322/20
22162-G5710	2.8322/14
22162-G5711	2.8322/14
22162-KA020	2.7941
22162-N8801	2.7903
22162-N8801MP	2.7903
22162-R9006	2.8303/1
22162-R9007	2.8303/1
22162-W4502	2.7940
22433-18R10	9.6119
22433-1E400	9.6196
22433-3529R	9.6332
22433-42L10	9.6119
22440-1S700	4.9789
22440-1S710	4.9789
22440-2F200	4.9411
22440-2J210	4.9411
22440-57Y10	4.9399
22440-73C00	4.9399
22440-73C10	4.9399
22440-86J00	4.9658
22440-86J10	4.9658
22440-8B000	4.9789
22440-99B00	4.8608
22440-99B05	4.8608
22440-99B06	4.8608
22448-00A0C	9.6332
22448-00Q0A	9.6332
22448-00Q0B	9.6332
22448-00Q0C	9.6332
22448-00Q0E	9.6496
22448-00Q0F	9.6513
22448-00Q0G	9.6332
22448-00QAA	9.6332
22448-00QAB	9.6332
22448-00QAC	9.6496
22448-00QAD	9.6319
22448-00QAE	9.6332
22448-00QAH	9.6332
22448-1E400	9.6196

NISSAN

22448-1KC0A	9.6451
22448-1KT0A	9.6452
22448-1KT1A	9.6452
22448-3RC0A	9.6452
22448-6N000	9.6457
22448-6N002	9.6457
22448-6N010	9.6457
22448-6N011	9.6457
22448-6N012	9.6457
22448-6N015	9.6457
22448-95F0A	9.6457
22448-AX001	9.6502
22448-ED000	9.6452
22448-ED800	9.6389
22448-ED80A	9.6389
22448-JA00A	9.6452
22448-JA00C	9.6452
22448-JA10A	9.6433
22448-JA10C	9.6433
22448-JA11C	9.6433
22450-00Q0A	4.7230
22450-00Q0B	4.7244
22450-00Q0C	4.7230
22450-00QAA	4.7230
22450-00QAB	4.7244
22450-71J25	4.8609
22462-00Q0A	9.6418
24488-00QAA	4.7246
77001-07177	9.6332
82006-72564	9.6332
B2162-06W05	2.7940

OPEL

01972927	2.7573PHT
01985771	2.7574PHT
03469033	2.7480PHT
1 46 015	3.7524RS
10458316	9.6350
12 08 002	9.6241
12 08 003	9.6040
12 08 004	9.6241
12 08 008	9.6408
12 08 012	9.6300
12 08 020	9.6300
12 08 021	9.6350
12 08 028	9.6298
12 08 035	9.6009
12 08 036	9.6011
12 08 041	9.6094
12 08 047	9.6091
12 08 048	9.6241
12 08 053	9.6092
12 08 054	9.6040
12 08 065	9.6173
12 08 070	9.6040
12 08 071	9.6172
12 08 076	9.6289
12 08 086	9.6445
12 08 092	9.6447
12 08 093	9.6447
12 08 096	9.6447
12 08 098	9.6445
12 08 108	9.6342
12 08 117	9.6531
12 08 120	9.6350
12 08 123	9.6447
12 08 241	9.4004
12 08 243	9.4034
12 08 246	9.4004
12 08 248	9.4005
12 08 306	9.6298
12 08 307	9.6299
12 11 000	2.7530/19PHT
12 11 006	8.4702*N

OPEL

12 11 250	2.7481PHT
12 11 252	2.7480PHT
12 11 253	2.7476PHT
12 11 256	2.7499
12 11 258	2.7573PHT
12 11 260	2.7574PHT
12 11 261	2.7530/10PHT*A
12 11 262	2.7530/21PHT
12 11 265	2.7480PHT
12 11 266	2.8099PHT
12 11 267	2.7480PHT*A
12 11 268	2.7530/19PHT
12 11 269	2.7530/26PHT
12 11 270	2.7530/27PHT*A
12 11 271	2.8100PHT
12 11 273	2.7530/28PHT
12 11 275	2.7684PHT
12 11 276	2.7530/27PHT*A
12 11 582	9.4025
12 11 591	9.4025
12 12 125	8.3411
12 12 126	8.3410
12 12 128	2.7462
12 12 131	2.7472PHT
12 12 135	2.7472PHT
12 12 136	2.7476PHT
12 12 137	2.7476PHT
12 12 138	2.7472PHT
12 12 140	2.7566PHT
12 12 141	2.7481PHT
12 12 143	2.7479PHT
12 12 147	2.7462
12 12 154	1.3455HDVS
12 12 200	3.8128RS
12 12 203	3.7600
12 12 204	3.7703RS
12 12 206	3.7573/27RS
12 12 207	3.7703RS
12 12 208	3.7593
12 12 213	3.7526RS
12 12 216	3.7555RS
12 12 217	3.7556RS
12 12 218	3.7596
12 12 219	3.7561RS
12 12 220	3.7556RS
12 12 221	3.7597
12 12 222	3.7573/21RS
12 12 224	3.7573/27RS
12 12 253	0.0179/112
12 12 259	0.0179/112
12 12 260	0.0179/112
12 16 011	1.2534HDVS
12 37 334	9.4036*J
12 37 464	9.4036*J
12 37 504	9.4025
12 82 044	4.7195
12 82 044	4.7199
12 82 077	4.8688
12 82 078	4.8688
12 82 079	4.8688
12 82 080	4.8688
12 82 084	4.7195
12 82 089	4.7195
12 82 090	4.7195
12 82 091	4.7195
12 82 133	4.7199
12 82 134	4.7199
12 82 135	4.7199
12 82 141	4.7199
12 82 142	4.9947
12 82 143	4.9947
12 82 144	4.9947
12 82 145	4.9947
12 82 146	4.9559
12 82 147	4.9559
12 82 153	4.9559

OPEL

12 82 154	4.9559
12 82 155	4.9559
12 82 156	4.9559
12 82 163	4.9904
12 82 164	4.9904
12 82 165	4.9904
12 82 166	4.9904
12635672	9.6531
12670053	9.6531
12697989	9.6531
16 12 001	4.9506
16 12 005	1.2547
16 12 006	1.2529HDV
16 12 011	1.2534HDVS
16 12 013	4.9506
16 12 229	1.3455HDVS
16 12 385	1.2534HDVS
16 12 433	1.2549HDVS
16 12 434	4.8509
16 12 459	4.8514
16 12 477	4.9942
16 12 479	4.8514
16 12 497	4.8527
16 12 512	4.8956
16 12 523	4.8513
16 12 524	4.8514
16 12 527	4.8513
16 12 531	4.8527
16 12 532	4.8513
16 12 533	4.9237
16 12 539	4.8514
16 12 541	4.9237
16 12 542	4.8514
16 12 543	4.8634
16 12 544	4.9237
16 12 545	4.8513
16 12 552	4.8688
16 12 556	4.9237
16 12 557	4.9237
16 12 558	4.8689
16 12 559	4.8689
16 12 560	4.8689
16 12 561	4.8688
16 12 591	4.8634
16 12 592	4.8634
16 12 598	4.9562
16 12 606	4.9529
16 12 607	4.9529
16 12 608	4.9531
16 12 610	4.9237
16 12 639	4.9529
16 12 646	4.9506
16 12 651	4.8634
16 12 657	4.9904
17 84 226	3.7512RS
17 84 228	3.7593RS
17 84 231	3.7593RS
17 84 234	3.7595RS
17 84 235	3.7512RS
19005212	9.6299
25195107	9.6447
25198623	9.6447
3474283	9.6040
3639500	9.6509
3639845	9.6520
3648847	9.6375
42 91 891	3.7630
42 94 009	2.7593
42 94 029	9.6119
43 00 976	2.7630/24
43 00 982	2.7960
43 12 974	3.7969
43 13 484	3.7630
44 08 283	9.6332
44 08 389	9.6332
44 13 233	9.6332

OPEL

44 32 202	9.6332
5 97 091	9.6375
55561655	9.6445
55573735	9.6447
55577898	9.6447
55579072	9.6447
55584404	9.6445
62 35 037	9.6407
62 37 753	9.4025
90009490	0.0179/112
90230575	2.7530/10PHT
90297426	2.7530/21PHT
90336536	2.7530/27PHT
90350765	2.7530/19PHT
90350988	2.7530/26PHT
90350997	2.8100PHT
90443900	9.6173
90449572	9.6173
90449739	9.6040
90458250	9.6172
90506102	9.6289
90510386	9.6040
90543059	9.6298
90543253	9.6300
91 19 567	9.6408
91 98 834	9.6407
91159996	9.6332
93161188	9.6332
93161948	9.6332
93177212	9.6300
93180806	9.6298
95512934	9.6342
95517924	9.6350
95528319	9.6447
9671214580	9.6509
9675390980	9.6520
RP 1 212 007	1.2534HDVS
RP 1 212 154	1.3455HDVS
RP121201	1.2547
RP121202	1.2529HDV

PEUGEOT

00 600 665 00	1.4932
16 075 767 80	9.6405
16 115 478 80	9.6359
5900 H1	8.3619*N
5900 H7	8.3619*N
5900 H9	8.3619*N
5900 J1	8.3619*N
5900 K3	8.3619*N
5900 K6	8.3619*N
5900 K7	8.3619*N
5904 06	8.2653
5904 25	8.2659
5904 F1	8.4978M
5904 K3	8.3617
5904 K8	8.3619
5904 K9	8.3617
5904 L3	8.3619
5904 P5	8.3619
5905 09	8.2653
5927 09	1.3655
5927 30	1.2540
5927 35	1.3691/12U
5927 43	1.3676
5927 44	1.3676
5927 50	1.2534HDVS
5927 65	1.2549HDVS
5927 73	1.3691/2
5927 83	1.3691/3
5927 90	9.4005
5927 92	1.3691/5
5927 96	1.3691/3
5937 05	3.7691

PEUGEOT

5937 09	3.7688
5937 16	3.7691
5937 17	3.7683RS
5937 18	3.7688RS
5937 21	3.7523RS
5937 22	3.7688
5937 25	3.7556RS
5937 26	3.7549RS
5937 28	3.7694
5937 29	3.8247RS
5937 30	3.7696RS
5937 31	3.7555RS
5937 32	3.7525RS
5937 34	3.7691
5937 40	3.7561RS
5937 42	3.7573/19RS
5937 43	3.7694
5937 44	3.7704
5937 47	3.7702RS
5937 49	3.7696RS
5937 51	3.7526RS
5940 52	2.7530/11PHT
5940 52	3.7526RS
5941 06	2.7649PHT
5941 08	2.7649PHT
5941 20	2.7649PHT
5941 23	2.7654PHT
5941 26	2.7658PHT
5941 27	2.7479PHT
5941 28	2.7659PHT
5941 30	2.8201PHT
5941 32	2.7524PHT
5941 41	2.7667PHT
5941 42	2.7530/6PHT*A
5941 43	2.8198PHT
5941 44	2.7530/11PHT
5941 45	2.7677PHT
5941 46	2.7674PHT
5941 47	2.7530/22PHT*A
5941 48	2.7677PHT
5945 02	9.4005
5945 03	9.4005
5945 10	1.4946M
5945 25	9.4005
5945 31	9.4005
5945 33	9.4005
5945 39	9.4005
5945 48	9.4005
5945 51	9.4034
5948 04	0.0856
5948 05	0.0323
5948 06	0.0323
5948 11	0.0334
5948 17	0.0334
5948 27	0.0334
5967 79	4.8846
5967 84	4.8846
5967 C3	4.8747
5967 E5	4.8748
5967 H5	4.8748
5967 K4	4.8748
5967 K6	4.8780
5967 K7	4.8747
5967 K9	4.8491
5967 L0	4.8674
5967 L1	4.8494
5967 L6	4.8494
5967 L7	4.8674
5967 L8	4.8494
5967 L9	4.9025
5967 N1	4.8494
5967 N2	4.8655
5967 N6	4.9374
5967 N7	4.8674
5967 P1	4.9374
5970 11	9.6001D

PEUGEOT

5970 28	9.6001D
5970 42	9.6006
5970 43	9.6005
5970 45	9.6055
5970 48	9.6088
5970 49	9.6089
5970 53	9.6068
5970 64	9.6375
5970 70	9.6088
5970 72	9.6303
5970 74	9.6303
5970 75	9.6308
5970 76	9.6409
5970 78	9.6305
5970 79	9.6305
5970 80	9.6307
5970 84	9.6409
5970 85	9.6383
5970 87	9.6376
5970 88	9.6361
5970 90	9.6305
5970 91	9.6375
5970 92	9.6376
5970 96	9.6397
5970 97	9.6305
5970 98	9.6308
5970 99	9.6307
5970 A0	9.6376
5970 A5	9.6409
5970 A6	9.6376
5970 A8	9.6305
5970 A9	9.6303
5970 C0	9.6361
5970 C1	9.6361
5979 A8	9.6305
96 035 284	9.6055
96 062 288	9.6089
96 228 897	9.6088
96 246 755 80	9.6303
96 281 585 80	9.6303
96 566 957 80	9.6376
96 712 145 80	9.6509
96 753 909 80	9.6520
98 067 027 80	9.6375
98 078 418 80	9.6375

PIAGGIO

19102-87704-000	3.7630
498325	8.4980M
498327	9.4020

PORSCHE

177 860 820 20	1.2534HDVS
616 602 215 00	2.7462
616 602 215 02	2.7476PHT
616 602 221 00	3.7518RS
616 602 221 05	3.7521RS
616 602 223 00	1.2534HDVS
616 602 226 00	1.2521
616 602 226 02	1.2547
901 602 901 00	2.7472PHT
901 602 928 00	3.7512RS
901 602 932 00	1.4932
901 602 960 00	1.2549HDVS
901 602 960 03	1.2547
901 602 963 00	2.7472PHT
923 602 929 00	3.7525RS
928 602 211 01	2.7528PHT*A
928 602 706 01	9.4034
928 602 902 00	2.7490PHT*A
928 602 904 03	3.7523RS
930 602 902 00	3.7524RS

PORSCHE

930 602 902 01	3.7573/13RS
930 602 902 02	3.7573/13RS
930 602 904 00	2.7481PHT
930 602 908 00	2.7481PHT
930 602 919 00	2.7523PHT*A
931 602 906 00	3.7555RS
944 602 251 00	2.7517PHT*A
944 602 901 00	3.7570RS
944 602 902 00	2.7517PHT*A
944 602 906 01	3.7570RS
955 602 101 00	9.6334
955 602 101 01	9.6334
955 602 101 02	9.6334
955 602 101 03	9.6334
955 602 101 04	9.6334
955 602 101 05	9.6334
958 602 101 00	9.6334
958 602 102 00	9.6327
958 905 110 00	9.6536
958 905 110 01	9.6536
PAB 905 715	9.6334
PAC 905 110	9.6536
PAC 905 110 A	9.6536

PUCH

000 158 71 03	9.6216
302 3 50 015 0	1.2568
364 4 50 513 2	0.0130
A 000 150 02 80	9.6216
E 023 015	1.2568
E 644 513	0.0130

RELIANT

17 241	2.8075
17 509	1.4683MHDV
90 792	2.8078
91 119	2.8078
210 803	1.4144HDV

RENAULT

08 02 119 800	0.0856
08 51 874 100	2.7649PHT
08 51 877 600	0.0856
08 53 712 500	0.0323
08 54 120 600	3.7691
08 54 137 800	1.3655
08 54 233 000	0.0856
08 54 719 900	2.7641
08 54 720 000	3.7681
08 54 725 600	1.3661
08 54 910 100	0.0856
08 54 913 400	2.8543
08 54 921 500	1.6854
08 54 923 300	0.0856
08 54 943 800	0.0856
08 54 954 600	1.3656
08 55 054 100	3.7683RS
08 57 113 200	2.8169
08 57 113 600	1.4932
08 57 113 700	3.7752
22 43 324 28R	9.6513
22 43 325 97R	9.6332
22 43 327 34R	9.6452
22 43 335 29R	9.6332
22 43 361 34R	9.6496
22 43 392 77R	9.6452
22 44 81K C0A	9.6451

RENAULT

22 44 81K T0A	9.6452
22 44 83R C0A	9.6452
22 44 8JA 00C	9.6452
22 44 8JA 10C	9.6433
60 01 543 604	9.6496
60 25 003 011	4.8539
60 25 003 095	4.8543
74 01 275 174	9.8123
74 31 275 284	4.7061
74 31 367 783	3.7573/47RS
74 33 501 944	2.7530/30PHT
74 39 135 700	4.7064
74 39 445 258	4.7064
77 00 100 589	9.6276
77 00 100 643	9.6278
77 00 102 012	2.7672PHT*M
77 00 106 221	4.9492
77 00 107 177	9.6332
77 00 107 269	9.6096
77 00 107 662	4.9447
77 00 113 357	9.6332
77 00 113 357 A	9.6332
77 00 114 549	4.9681
77 00 267 693	3.7573/19RS
77 00 267 694	2.7530/6PHT*A
77 00 267 728	2.7530/6PHT*A
77 00 273 226	4.9443
77 00 273 826	4.7244
77 00 274 008	9.6496
77 00 552 370	9.6001D
77 00 562 370	9.6001D
77 00 682 481	4.8839
77 00 720 781	4.8539
77 00 720 842	4.8539
77 00 726 529	4.8839
77 00 726 626	4.8543
77 00 726 736	2.7669PHT
77 00 727 261	3.7697
77 00 729 838	2.7691*B
77 00 730 116	2.7666PHT*B
77 00 733 982	2.7673PHT*M
77 00 736 209	2.7672PHT*M
77 00 739 893	2.7683PHT*B
77 00 740 118	4.8539
77 00 741 025	4.8415
77 00 742 835	4.8801
77 00 742 837	4.8802
77 00 742 853	2.7683PHT*B
77 00 743 290	2.7683PHT*M
77 00 743 602	2.7683PHT*M
77 00 749 450	9.6128
77 00 749 516	4.8415
77 00 749 516	4.8802
77 00 749 517	4.8801
77 00 749 521	4.9332
77 00 749 521	4.9497
77 00 749 877	4.8415
77 00 850 462	4.8539
77 00 850 463	4.8543
77 00 850 475	4.8802
77 00 851 781	2.7672PHT*M
77 00 854 306	9.6175
77 00 854 307	9.6176
77 00 855 322	4.8415
77 00 855 902	4.9497
77 00 857 045	4.9332
77 00 857 980	4.8920
77 00 857 981	4.8920
77 00 857 981	4.9499
77 00 859 053	2.7686PHT*M
77 00 863 020	9.6255
77 00 863 021	9.6256
77 00 866 923	4.9446
77 00 872 265	9.6175
77 00 872 449	9.6265
77 00 872 692	9.6176

RENAULT

77 00 872 834	9.6265
77 00 873 186	4.9499
77 00 874 109	4.9447
77 00 874 564	4.9501
77 00 875 000	9.6332
77 01 000 998	0.0856
77 01 003 813	1.6854
77 01 008 141	1.6854
77 01 008 855	0.0856
77 01 012 471	0.0856
77 01 012 533	1.2549HDVS
77 01 012 535	3.7512RS
77 01 012 536	2.7479PHT
77 01 012 957	2.7645
77 01 018 729	0.0334
77 01 019 468	2.7649PHT
77 01 019 885	3.7681
77 01 019 886	2.7641
77 01 020 079	0.0334
77 01 020 357	3.7688
77 01 020 378	2.8543
77 01 020 784	2.7654PHT
77 01 021 676	0.0856
77 01 021 905	3.7523RS
77 01 021 981	3.7691
77 01 022 130	0.0323
77 01 022 175	2.7641
77 01 025 237	3.8112
77 01 025 238	1.4689
77 01 025 240	2.8198PHT
77 01 025 241	3.8247RS
77 01 026 824	3.7694
77 01 027 411	2.7659PHT
77 01 027 491	2.7659PHT
77 01 027 870	3.7694
77 01 029 263	2.7479PHT
77 01 029 971	2.7663PHT
77 01 029 972	3.7697
77 01 029 973	2.7670
77 01 030 505	2.8201PHT
77 01 031 135	9.6007
77 01 031 149	1.3691/26*P
77 01 031 411	1.3691/27*P
77 01 031 989	1.4948M
77 01 032 418	1.3691/26*P
77 01 033 621	2.7681PHT
77 01 033 622	3.7701
77 01 034 946	2.8211PHT
77 01 034 947	3.8259
77 01 041 607	9.6255
77 01 041 608	9.6256
77 01 041 745	2.7530/6PHT*A
77 01 065 086	9.6389
77 01 200 739	1.3686
77 01 200 876	1.2540
77 01 202 293	2.7663PHT
77 01 202 683	2.7666PHT*M
77 01 202 755	2.7688*M
77 01 203 118	2.7682PHT
77 01 203 118	2.7683PHT*M
77 01 348 252	9.6001D
77 01 349 467	4.8543
77 01 349 467	4.8839
77 01 349 468	4.8839
77 02 001 761	1.4932
77 02 037 711	1.2534HDVS
77 02 037 713	3.7512RS
77 02 038 122	2.7479PHT
77 02 038 190	1.4940
77 02 038 439	3.7525RS
77 02 124 314	1.3724
77 02 124 317	0.0397
77 02 124 320	3.7758
77 02 124 325	2.7723PHT
77 02 163 081	1.3726
82 00 025 256	9.6319

RENAULT

82 00 035 420	9.6332
82 00 084 401	9.6319
82 00 122 243	4.7049
82 00 141 149	9.6265
82 00 154 186	9.6332
82 00 154 186 A	9.6332
82 00 208 611	9.6332
82 00 380 267	9.6332
82 00 405 098	9.6332
82 00 486 877	4.7230
82 00 506 297	4.7244
82 00 568 671	9.6332
82 00 575 895	4.7229
82 00 672 564	9.6332
82 00 702 693	9.6418
82 00 713 680	4.7246
82 00 765 882	9.6332
82 00 805 133	4.7230
82 00 943 801	4.7252
85 51 874 100	2.7649PHT
89 00 568 671	9.6332
89 33 003 389	3.7892
89 33 004 024	2.7793PHT
89 56 026 876	2.7793PHT
H77 00 873 701	9.6496
H77 00 875 000	9.6332
H82 01 154 128	9.6513

ROLLS-ROYCE

12 13 5 A06 753	9.6375
12 13 7 571 643	9.6375
12 13 8 616 153	9.6375
12 13 8 657 273	9.6375
UE 46152	3.7570RS
UE 46153	2.7517PHT*A

ROVER

AUU1186	2.8093PHT
AUU1641	3.8129RS
AUU1690	3.8124RS
ERR6045	9.6068
GCL110	9.6001D
GCL145	9.6111
GCL146	9.6111
GCL161	9.6113
GCL195	9.6114
GCL201	9.6274
GCL204	9.6089
GCL207	9.6247
GCS124	1.4689
GDC136	2.8078
GDC152	2.8093PHT
GDC156	2.8094PHT
GDC160	2.8093PHT
GDC214	2.7649PHT
GDC346	2.7969
GDC347	2.7969
GDC377	2.8093PHT
GDC384	2.8093PHT
GDC405	2.7968
GDC406	2.7968
GDC407	2.7982
GHT274	4.9711
GHT284	4.9888
GHT287	4.9914
GRA114	3.8112
GRA138	3.8124RS
GRA143	3.8125
GRA2123	3.7691
GRA2138	3.8124RS

ROVER

GRA2143	3.8125
GRA2236	3.7560RS
GRA2245	3.7956
GRA2264	3.7560RS
GRA2274	3.8124RS
GRA2285	3.8129RS
GRA2287	3.7982
GRA2310	3.8129RS
GRA2324	3.7995
GRA2327	3.7998
GSC113	0.0334
NEC100530	9.6114
NEC100630	9.6274
NEC100630SLP	9.6274
NEC100631	9.6274
NEC100710	9.6089
NEC100750	9.6247
NEC101000	9.6313
NEC101000SLP	9.6313
NEC101010	9.6313
NGC000040	4.9889
NGC000060	4.9914
NGC000090	4.9888
NJD10006	2.7969
NJD10008	2.7969
NJD10009	2.7969
NJD10010	2.8093PHT
NJD100150	2.7968
NJD100190	2.7982
NJD100200	2.8106
NJE100060	3.7995
NJE100070	3.8129RS
NJE100100	3.8002
NJI100030	3.7998
NJL100030	9.4052
NJL100040	9.4052
NJW100030	9.4052
RTC3433	9.6001D
RTC6620	0.0334
RTC6627	1.4689
STC8368	2.8091PHT

SAAB

10 458 316	9.6350
12 08 053	9.6092
30 584 237	9.6092
40 23 149	9.4034
42 26 031	9.6092
51 71 111	9.6092
59 60 059	9.4034
74 86 822	8.2693
75 01 216	2.7479PHT
75 03 600	9.4034
75 19 309	3.7555RS
75 64 420	3.7573/23RS
78 63 236	3.7512RS
78 66 353	1.2534HDVS
78 66 932	2.7476PHT
83 52 346	2.7479PHT
83 55 919	1.2549HDVS
83 55 935	2.7479PHT
83 55 950	3.7525RS
85 22 328	9.6001D
88 17 520	4.9138
88 22 686	3.7573/21RS
88 57 617	8.2744*N
89 80 534	9.4007
90 350 021	9.6092
90 350 987	9.6092
90 369 434	9.6092
91 19 567	9.6408
91 70 259	2.7524PHT
93 06 697	3.7525RS

SAAB

93 37 346	4.9140
93 50 323	3.7526RS
93 51 743	0.0179/95
93 55 488	3.7526RS
93 59 597	1.2549HDVS
93 90 220	9.4004

SEAT

000 389 117 3	1.4932
000 389 287 3	3.7752
000 389 806 0	0.0617
000 389 806 5	3.8242RS
000 389 842 4	3.7683RS
000 389 948 9	3.8254RS
000 389 973 1	0.0339
000 389 976 9	2.8198PHT
000 389 977 0	3.8247RS
000 389 978 9	2.7714
000 398 066 5	2.7479PHT
000 398 066 6	3.7556RS
000 398 090 7	2.8201PHT
000 992 918 8	1.4942
000 993 470 8	3.7691
000 993 623 8	3.8242RS
000 993 667 7	1.3691/6
000 993 673 4	0.0339
000 993 673 5	2.7658PHT
000 993 681 4	2.7716
000 993 683 1	3.7752RS
000 993 686 6	3.7683RS
007083.06	1.4920
008415.06	3.8229
022 905 100 A	9.6335
022 905 100 D	9.6335
022 905 100 E	9.6334
022 905 100 G	9.6335
022 905 100 H	9.6334
022 905 100 K	9.6335
022 905 100 N	9.6335
022 905 100 P	9.6334
022 905 715	9.6334
022 905 715 C	9.6335
026 905 207 2	2.7494PHT
026 905 207 A	2.7668PHT
026 905 225 2	3.7573/21RS
026 905 225 K	3.7699RS
026 905 359 2	8.2733
027 905 207 A	2.7530/36PHT
030 905 065	8.2723
030 905 065 B	8.2723
030 905 205 AE	8.4982*N
030 905 207	2.7494PHT
030 905 207 A	2.8216PHT
030 905 225 C	3.8257RS
030 905 430 J	4.9595
030 905 430 K	4.9595
030 905 430 L	4.9595
030 905 430 M	4.9595
030 905 430 N	4.9601
030 905 430 P	4.9601
030 905 430 Q	4.9601
030 905 430 R	4.9601
030 998 065	8.2693
030 998 065 B	8.2734
032 905 106	9.8120
032 905 106 B	9.8120
032 905 106 D	9.8120
032 905 106 E	9.8120
032 905 106 F	9.8120
032 905 430 B	4.9569
032 905 430 C	4.9569
032 905 430 E	4.9569
036 905 100 A	9.6374
036 905 100 B	9.6374

SEAT

036 905 100 C	9.6374
036 905 100 D	9.6374
036 905 225 H	3.7556RS
036 905 430 AA	4.9575
036 905 430 AB	4.9575
036 905 430 AC	4.9575
036 905 430 AD	4.9575
036 905 430 AE	4.9575
036 905 430 H	4.9575
036 905 430 J	4.9575
036 905 430 K	4.9575
036 905 430 L	4.9575
036 905 430 M	4.9575
036 905 430 N	4.9575
036 905 430 Q	4.9575
036 905 430 R	4.9575
036 905 430 S	4.9575
036 905 430 T	4.9575
036 905 715	9.6374
036 905 715 A	9.6374
036 905 715 C	9.6374
036 905 715 E	9.6374
036 905 715 F	9.6374
036 905 715 G	9.6374
036 905 715 H	9.6374
037 905 205 M	8.2723*N
037 905 207	2.7530/33PHT
03D 905 115 F	9.6331
03D 905 115 G	9.6331
03D 905 715 A	9.6331
04C 905 110 B	9.6499
04C 905 110 D	9.6499
04C 905 110 E	9.6499
04C 905 110 H	9.6499
04C 905 110 J	9.6499
04C 905 110 L	9.6499
04E 905 110	9.6499
04E 905 110 A	9.6499
04E 905 110 B	9.6499
04E 905 110 E	9.6499
04E 905 110 K	9.6499
04E 905 110 P	9.6499
050 905 205 A	8.2659*N
050 905 205 AH	8.2723*N
051 905 205	8.2659*N
051 905 205 C	8.2733*N
051 905 207	2.7530/36PHT
051 905 225	3.7573/21RS
052 905 225 C	3.7573/21RS
055 905 225 B	3.7555RS
058 905 105	9.6254S
06A 905 115	9.6329
06A 905 115 A	9.6329
06A 905 115 B	9.6329
06A 905 115 C	9.6329
06A 905 115 D	9.6329
06A 905 430 AA	4.9484
06A 905 430 AC	4.9585
06A 905 430 AD	4.9585
06A 905 430 AE	4.9585
06A 905 430 AG	4.9585
06A 905 430 H	4.9585
06A 905 430 J	4.9585
06A 905 430 K	4.9585
06A 905 430 L	4.9585
06A 905 430 M	4.9489
06A 905 430 N	4.9489
06A 905 430 P	4.9489
06A 905 430 Q	4.9489
06A 905 430 R	4.9484
06A 905 430 S	4.9484
06A 905 430 T	4.9484
06B 905 115 B	9.6345
06B 905 115 D	9.6329
06B 905 115 E	9.6345
06B 905 115 G	9.6329

SEAT

06B 905 115 H	9.6329
06B 905 115 J	9.6329
06B 905 115 L	9.6329
06B 905 115 M	9.6329
06B 905 115 N	9.6329
06B 905 115 P	9.6329
06B 905 115 Q	9.6329
06B 905 115 R	9.6329
06C 905 115 C	9.6329
06F 905 115 A	9.6326
06F 905 115 B	9.6326
06F 905 115 C	9.6326
06F 905 115 E	9.6326
06F 905 115 F	9.6326
06H 905 110 D	9.6536
06H 905 110 E	9.6536
06H 905 110 F	9.6536
06H 905 110 G	9.6536
06H 905 110 H	9.6536
06H 905 110 L	9.6536
06H 905 115	9.6326
06H 905 115 A	9.6326
06H 905 115 B	9.6326
06L 905 110 B	9.6536
06L 905 110 C	9.6536
06L 905 110 D	9.6536
06L 905 110 E	9.6536
06L 905 110 F	9.6536
06L 905 110 H	9.6536
06L 905 110 K	9.6536
071 905 143	9.4074
07K 905 715	9.6326
07K 905 715 A	9.6326
07K 905 715 B	9.6326
07K 905 715 C	9.6326
07K 905 715 D	9.6326
07K 905 715 F	9.6326
07K 905 715 G	9.6326
102312.06	2.8169
102541.06	1.4927
121334.06	3.8237
121461.06	1.4932
186035.06	2.7714
186036.06	2.7716
191 905 351 B	9.4007
211 905 115 D	9.6025
233731.06	1.4939
244311.06	3.8241
3892873	3.7752
3899489	3.8254RS
4D0 905 351	9.4076
6N0 905 104	9.8114
701 905 104 A	9.8116
867 905 105 A	9.6059
867 905 352	9.8114
N 038 885 1	4.8725
N10 050 201	4.9549
N10 050 205	4.8725
N10 050 205	4.8965
N10 052 706	4.8965
N10 052 808	4.8736
N10 052 809	4.9364
N10 052 812	4.8736
N10 052 817	4.9518
N10 052 902	4.8736
N10 052 902	4.9364
N10 052 903	4.9518
N10 052 904	4.9364
N10 052 904	4.9937
N10 052 907	4.8725
N10 052 907	4.9933
N10 070 210	4.9549
N10 070 210	4.9551
N10 243 607	4.9551
N10 264 601	4.8965
N10 316 401	4.9932

SEAT

N10 316 401	4.9933
N10 316 401	4.9937
N10 316 402	4.9932
N10 316 402	4.9933
N10 316 402	4.9937
N10 316 403	4.9932
N10 316 403	4.9933
N10 316 403	4.9937
N10 316 404	4.9932
N10 316 404	4.9933
N10 316 404	4.9937
N10 421 002	4.9932
N10 430 003	4.9569
NG0 020 010 6	1.3720
NG0 930 023 1	3.8237RS
NG1 023 020 6	2.8169
NG1 116 013 1	1.4939
NG1 195 053 1	3.8242RS
NG1 213 340 6	3.7752
NG1 214 610 6	1.4932
NG1 215 023 1	3.8237RS
NG1 323 013 1	3.8237
NG1 424 023 1	3.8242RS
NG1 539 013 1	3.8237RS
NG1 811 683 1	0.0617
NG1 860 360 6	2.7716
NG1 975 023 1	1.4942
NG2 155 013 1	2.8193
NG2 337 310 6	1.4939
NG9 810 442 9	1.2534HDVS
NG9 810 462 9	3.7525RS
SE 021028.301A	4.8612
SE 021913.010A	9.4004
SE 021914.001A	2.7479PHT
SE 021914.001B	2.8201PHT
SE 021914.004A	3.7556RS
SE 021914.004B	3.7573/21RS
SE 021914.016A	8.2693
SE 021970.015B	4.8612
SE 022028.301A	4.8612
SE 022970.015A	4.8612
SE 028914.001B	2.7729
SE 028915.000B	9.6096
SE 127914.001A	2.7716
SE 127914.004A	3.8242RS
SE 127914.004B	3.7683RS
SE 127914.006A	1.3720
SE 127914.006B	1.4942
SE 141914.001B	2.8198PHT
SE 141914.001C	2.7714
SE 141914.001D	2.7658PHT
SE 141914.004B	3.8247RS
SE 141914.004C	3.7752RS
SE 141914.004D	3.7691
SE 141914.006A	1.4946M
SE 141914.006B	1.4932
SE 141914.007A	0.0628
SE 141914.007C	0.0339
SE 141915.000A	9.6001D

SKODA

004 026 254 A	2.8343
004 050 014	9.8114
004 050 016	9.8114
007 901 696	4.9373
007 901 697	4.9373
007 901 698	4.9373
007 901 699	4.9373
007 901 700	4.9373
022 905 715	9.6334
030 905 065	8.2723
030 905 207	2.7494PHT
030 905 207 A	2.8216PHT

SKODA

030 905 225 C	3.8257RS
032 905 106	9.8120
032 905 106 B	9.8120
032 905 106 D	9.8120
032 905 106 E	9.8120
032 905 106 F	9.8120
032 905 430 F	4.9569
032 905 430 G	4.9569
032 905 430 H	4.9569
032 905 430 P	4.9569
032 905 430 P	4.9609
032 905 430 Q	4.9609
032 905 430 R	4.9609
032 905 430 T	4.9609
036 905 100 A	9.6374
036 905 100 B	9.6374
036 905 100 C	9.6374
036 905 100 D	9.6374
036 905 430 AB	4.9575
036 905 430 AC	4.9575
036 905 430 AD	4.9575
036 905 430 AE	4.9575
036 905 715	9.6374
036 905 715 A	9.6374
036 905 715 C	9.6374
036 905 715 E	9.6374
036 905 715 F	9.6374
036 905 715 G	9.6374
036 905 715 H	9.6374
03D 905 115	9.6331
03D 905 115 A	9.6331
03D 905 115 B	9.6331
03D 905 115 C	9.6331
03D 905 115 D	9.6331
03D 905 115 E	9.6331
03D 905 115 F	9.6331
03D 905 115 G	9.6331
03D 905 715 A	9.6331
03F 905 409 A	4.7248
03F 905 409 B	4.7248
03F 905 409 C	4.7248
04C 905 110 A	9.6499
04C 905 110 B	9.6499
04C 905 110 D	9.6499
04C 905 110 E	9.6499
04C 905 110 H	9.6499
04C 905 110 J	9.6499
04C 905 110 L	9.6499
04E 905 110	9.6499
04E 905 110 A	9.6499
04E 905 110 B	9.6499
04E 905 110 E	9.6499
04E 905 110 K	9.6499
04E 905 110 M	9.6499
04E 905 110 P	9.6499
052 905 225 C	3.7573/21RS
058 905 101	9.6254S
058 905 105	9.6254S
06A 905 115	9.6329
06A 905 115 A	9.6329
06A 905 115 B	9.6329
06A 905 115 C	9.6329
06A 905 115 D	9.6329
06A 905 430 AA	4.9484
06A 905 430 AC	4.9585
06A 905 430 AD	4.9585
06A 905 430 AE	4.9585
06A 905 430 AG	4.9585
06A 905 430 AH	4.9585
06A 905 430 AJ	4.9585
06A 905 430 AK	4.7223
06A 905 430 AL	4.7223
06A 905 430 AM	4.7223
06A 905 430 AN	4.7223
06A 905 430 AP	4.9585
06A 905 430 AQ	4.9585

SKODA

06A 905 430 D	4.9479
06A 905 430 E	4.9479
06A 905 430 F	4.9479
06A 905 430 G	4.9479
06A 905 430 H	4.9585
06A 905 430 J	4.9585
06A 905 430 K	4.9585
06A 905 430 L	4.9585
06A 905 430 M	4.9489
06A 905 430 N	4.9489
06A 905 430 P	4.9489
06A 905 430 Q	4.9489
06A 905 430 R	4.9484
06A 905 430 S	4.9484
06A 905 430 T	4.9484
06B 905 115 B	9.6345
06B 905 115 D	9.6329
06B 905 115 E	9.6345
06B 905 115 G	9.6329
06B 905 115 H	9.6329
06B 905 115 J	9.6329
06B 905 115 L	9.6329
06B 905 115 M	9.6329
06B 905 115 N	9.6329
06B 905 115 P	9.6329
06B 905 115 Q	9.6329
06B 905 115 R	9.6329
06B 905 430	4.9585
06B 905 430 A	4.9585
06B 905 430 B	4.9585
06B 905 430 C	4.9585
06C 905 115 C	9.6329
06F 905 115 C	9.6326
06F 905 115 F	9.6326
06H 905 110 D	9.6536
06H 905 110 E	9.6536
06H 905 110 F	9.6536
06H 905 110 G	9.6536
06H 905 110 H	9.6536
06H 905 110 L	9.6536
06H 905 115	9.6326
06H 905 115 A	9.6326
06H 905 115 B	9.6326
06L 905 110 C	9.6536
06L 905 110 D	9.6536
06L 905 110 E	9.6536
06L 905 110 F	9.6536
06L 905 110 H	9.6536
06L 905 110 K	9.6536
07K 905 715 A	9.6326
07K 905 715 B	9.6326
07K 905 715 C	9.6326
07K 905 715 D	9.6326
07K 905 715 F	9.6326
07K 905 715 G	9.6326
113 911 051	2.8342
113 911 052	2.8342
113 911 400	3.8362RS
113 911 401	1.5945
114 911 070	3.8363RS
115 911 400	3.7555RS
115 911 401	3.8363RS
4D0 905 351	9.4076
6N0 905 104	9.8114
6U0 905 430	4.9569
N10 070 210	4.9609

SMART

A 132 158 00 03	9.6403
A 281 906 00 00	9.6513
Q 0002576V002000000	4.9643
Q 0003100V004000000	9.6314
Q 0003100V005000000	9.6314

SOLO

05 20 100	0.0130
05 20 144	1.2571
05 20 145	0.0179/80
05 20 146	1.2583

SSANGYONG

0001587003	9.6216
0001587103	9.6216
0001587503	9.6216

STERLING

182 182 000 30	9.6111

SUBARU

22107-KA080	1.5084
22136-KA050	1.5084*F
22157-AA030	3.7952
22157-AA040	3.7973
22157-AA080	3.7993
22157-KA010	3.7973
22157-KA020	3.7630
22157-KA030	3.7973
22157-KA040	3.7629
22157-KA060	3.8331/19
22162-AA030	2.7958
22162-AA040	2.7946
22162-AA060	2.7975
22162-AA090	2.8322/45
22162-KA010	2.7630/11
22162-KA020	2.7941
22162-KA050	2.7941
22162-KA100	2.7630/29
22433-AA230	9.6165
22433-AA240	9.6166
22433-AA360	9.6165
22433-AA370	9.6166
22451-AA341	4.9835
22451-AA450	4.9835
22451-AA511	4.9835
22451-AA630	4.9835
22451-AA640	4.9835
22451-AA660	4.9817
22451-AA660	4.9819
22451-AA661	4.7100
22451-AA661	4.9817
22451-AA661	4.9819
22451-AA710	4.7100
22451-AA710	4.9817
22451-AA74A	4.9835
22451-AA780	4.9819
22451-AA781	4.9819
22451-AA793	4.9887
22451-AA800	4.9813
22451-AA810	4.9813
22451-AA822	4.9887
22451-AA890	4.7100
22451-AA940	4.7106
22452-AA112	4.9835
22452-AA120	4.9835
22452-AA160	4.9835
22452-AA682	4.9887
22452-AA690	4.7106
22453-AA140	4.7106
22454-AA140	4.7106
33310-71C30	3.7628
33321-63B10	2.7623
33400-62J00	9.6470
33400-83E10	9.6470

SUBARU

39100-0601	2.7903
39101-4302	3.7614
39146-4302	1.3522HDV
39146-4312	1.3522HDV
49100-5501	2.7948
49100-8711	2.7957
49101-3202	3.7614
49101-7102	3.7614
49101-8711	3.7952
49146-7011	1.4456HDV
89100-4111	2.7903
89146-4111	1.4456HDV
89146-4821	1.4456HDV
90919-02257	9.6437

SUZUKI

33140-74010	1.3511HDV
33140-74010-000	1.3511HDV
33310-56B10	3.8331/31
33310-56B10-000	3.8331/31
33310-60B50	3.7634
33310-60B50-000	3.7634
33310-60C30	3.8331/31
33310-60C30-000	3.8331/31
33310-60C31	3.8331/31
33310-60C31-000	3.8331/31
33310-63B10	3.7628
33310-63B10-000	3.7628
33310-70B50	3.8331/19
33310-70B50-000	3.8331/19
33310-70E00	3.8331/36
33310-70E00-000	3.8331/36
33310-70E01	3.8331/36
33310-70E01-000	3.8331/36
33310-71C30	3.7628
33310-71C30-000	3.7628
33310-73010	3.7614
33310-73010-000	3.7614
33310-75F00	3.7973
33310-75F00-000	3.7973
33310-77090	3.7614
33310-77090-000	3.7614
33310-80C10	3.7636
33310-80C10-000	3.7636
33310-82010	3.7630
33310-82010-000	3.7630
33310-82032	3.8331/8
33310-82032-000	3.8331/8
33310-82110	3.7630
33310-82110-000	3.7630
33310-82610	3.7628
33310-82610-000	3.7628
33310-86240	3.8331/8
33310-86240-000	3.8331/8
33321-56B10	2.8322/40
33321-56B10-000	2.8322/40
33321-58B10	2.8322/44
33321-58B10-000	2.8322/44
33321-60A10	2.7593
33321-60A10-000	2.7593
33321-62E10	2.8322/31
33321-62E10-000	2.8322/31
33321-63B10	2.7623
33321-63B10-000	2.7623
33321-63B40	2.8322/32
33321-63B40-000	2.8322/32
33321-64B10	2.7946
33321-64B10-000	2.7946
33321-75110	2.7593
33321-75110-000	2.7593
33321-78110	2.7607
33321-78110-000	2.7607
33321-78B40	2.8322/39

SUZUKI

33321-78B40-000	2.8322/39
33321-79210	2.7602
33321-79210-000	2.7602
33321-79611	2.7607
33321-79611-000	2.7607
33321-80C10	2.7630/26
33321-80C10-000	2.7630/26
33321-82010	2.7607
33321-82010-000	2.7607
33321-85570	2.7630/15
33321-85570-000	2.7630/15
33321-86510	2.7623
33321-86510-000	2.7623
33400-60R00	9.6521
33400-60R00-000	9.6521
33400-62J00	9.6470
33400-62J00-000	9.6470
33400-65G00	9.6435
33400-65G00-000	9.6435
33400-65G01	9.6435
33400-65G01-000	9.6435
33400-65G02	9.6435
33400-65G02-000	9.6435
33400-78P00	9.6521
33400-78P00-000	9.6521
33400-81P00	9.6521
33400-81P00-000	9.6521
33400-83E10	9.6470
33400-83E10-000	9.6470
33400M68P10	9.6521
33400M68P10-000	9.6521
33400M79F00	9.6470
33400M79F00-000	9.6470
33400M83E10	9.6470
33400M83E10-000	9.6470
33410-57B10	9.6101
33410-57B10-000	9.6101
33410-66D00	9.6491
33410-66D00-000	9.6491
33410-66D01	9.6491
33410-66D01-000	9.6491
33410-66D10	9.6491
33410-66D10-000	9.6491
33410-80C10	9.6101
33410-80C10-000	9.6101
33700-51G10	4.9413
33700-51G10-000	4.9413
33700-60A10	4.9415
33700-60A10-000	4.9415
33700-60A20	4.9415
33700-60A20-000	4.9415
33700-80001	4.7020
33700-80001-000	4.7020
33700-80012	4.7020
33700-80012-000	4.7020
33700-82610	4.7020
33700-82610-000	4.7020
33700-83010	4.7020
33700-83010-000	4.7020
33700-83020	4.9417
33700-83020-000	4.9417
33700M70FA0	4.7231
33700M70FA0-000	4.7231
33705-51G10	4.9413
33705-51G20	4.9434
33705-51G20-000	4.9434
33705-57B21	4.7004
33705-66D00	4.7005
33705-66D00-000	4.7005
33705-75F02-000	4.7028
33705-75F03-000	4.7028
33705-80040	4.7020
33705-80040-000	4.7020
33705-80G00	4.7013
33705-80G00-000	4.7013
33705-83020	4.9417

SUZUKI

33705-83020-000	4.9417
33705-86G00	4.7013
33705-86G00-000	4.7013
33705M79F00	4.7005
33705M79F00-000	4.7005
33710-51G10-000	4.9413
33710-57B20	4.7004
33710-57B20-000	4.7004
33710-63B30-000	4.9413
33710-75F00-000	4.7028
33710-80010	4.7020
33710-80010-000	4.7020
33710-82010	4.9413
33710-82010-000	4.9413
33710-83020	4.9417
33710-83020-000	4.9417
33710-86001-000	4.9413
33710M70F30	4.7231
33710M70F30-000	4.7231
33730-86G00-000	4.7013
33740-86G00-000	4.7013

TALBOT

0013 52 9900	3.7525RS
0013 56 6600	8.2653
0016 85 6600	2.7658PHT
0017 67 1000	2.7654PHT
0017 67 1100	3.7691
0043 21 2900	3.7694
0043 23 7300	3.7561RS
0055 50 5600	9.6001D
0057 18 9700	9.4005
0060 06 6500	1.4932
0174 98 900	1.2534HDVS
1350 02 00	2.7649PHT
1350 03 00	3.7691
1352 99 00	3.7525RS
1353 00 00	2.7479PHT
1356 65 00	2.7479PHT
1361 48 00	0.0334
1361 51 00	1.3691/11U
1364 49 00	1.2534HDVS
1685 66 00	2.7658PHT
1690 1	2.7649PHT
1743 05 00	0.0334
1832 10 01	2.7479PHT
1832 20 01	3.7525RS
2009 9Z	1.3655
2882 9V	0.0323
3065 2H	2.7645
3792 5	0.0334
3798 9P	1.3691/11U
3888 0	2.7645
4033 01 9620	1.2534HDVS
4519 2Q	1.3667
4613 6	2.7645
5043 70 9	2.8075
5135 00 300	3.7691
7506 20 75	1.4683MHDV
7506 37 64	3.8112
7506 60 02	3.7691
7506 63 87	2.8078
9150 49 1280	9.4005
9150 63 3880	9.4005
9405 92 7838	1.3691/3
9405 93 7228	3.7688
9405 94 8178	0.0334
9611 6	3.7683RS

TOYOTA

04191-41010	1.3511HDV

TOYOTA	
19070-74170	9.6185S
19080-66010	9.6185S
19101-01030	2.7619
19101-02020	2.7494PHT
19101-10020	2.7630/10
19101-11010	2.7622
19101-11032	2.7630/48
19101-11060	2.7630/35
19101-11300	2.7630/45
19101-15010	2.7592
19101-15120	2.7630/48
19101-15140	2.7630/32
19101-15160	2.7630/32
19101-16080	2.7619
19101-16220	2.7619
19101-16250	2.7630/18
19101-25070	2.7593
19101-35010	2.7630/43
19101-35020	2.7599
19101-35120	2.7599
19101-35140	2.7599
19101-35180	2.7599
19101-35190	2.7599
19101-38011	2.7593
19101-38210	2.7599
19101-66010	2.7630/42
19101-71010	2.7613
19101-71020	2.7614
19101-74050	2.7630/48
19101-74180	2.7630/37
19101-75040	2.7630/48
19101-76010	2.7630/22
19101-88363	2.7630/21
19102-02010	3.7627
19102-02020	3.7573/21RS
19102-02030	3.7636
19102-10020	3.7614
19102-11010	3.7629
19102-11030	3.7629
19102-11031	3.7629
19102-11050	3.7629
19102-11370	3.7629
19102-15021	3.7627
19102-16040	3.7627
19102-16060	3.7627
19102-26150	3.7614
19102-26151	3.7614
19102-33011	3.7614
19102-33012	3.7614
19102-35160	3.7627
19102-38160	3.7614
19102-38210	3.7627
19102-73060	3.7630
19102-74040	3.7636
19102-75010	3.7630
19102-87705	3.7629
19145-10020	1.3522HDV
19145-14010	1.3522HDV
19145-26060	1.3511HDV
19145-38011	1.3511HDV
19145-40010	1.3511HDV
19145-40010C	1.2534HDVS
19145-41010	1.3511HDV
19145-41020	1.3511HDV
19145-41030	1.3511HDV
19145-87701	1.3511HDV
19500-74040	9.6103*U
19500-74090	9.6185S*U
19500-74091	9.6185S*U
19500-74100	9.6185S*U
19500-74120	9.6185S*U
90080-19015	9.6361
90080-19019	9.6361
90080-19021	9.6359
90080-19023	9.6366
90118-WA474	9.6532

TOYOTA	
90919-02135	9.6097
90919-02163	9.6098
90919-02164	9.6099
90919-02185	9.6102
90919-02197	9.6103
90919-02200	9.6222
90919-02208	9.6103
90919-02209	9.6185S
90919-02229	9.6359
90919-02239	9.6361
90919-02240	9.6359
90919-02243	9.6366
90919-02244	9.6366
90919-02247	9.6358
90919-02248	9.6358
90919-02250	9.6437
90919-02251	9.6438
90919-02252	9.6436
90919-02255	9.6438
90919-02256	9.6437
90919-02257	9.6437
90919-02258	9.6436
90919-02260	9.6358
90919-02262	9.6361
90919-02265	9.6359
90919-02266	9.6366
90919-02270	9.6359
90919-02271	9.6545
90919-22209	4.9823
90919-22210	4.9823
90919-22327	4.9209
90919-22329	4.9393
90919-22369	4.9793
90919-22370	4.9793
90919-22373	4.9435
90919-22386	4.9856
90919-22387	4.9792
90919-22395	4.9880
90919-22400	4.9856
90919-A2001	9.6358
90919-A2002	9.6438
90919-A2003	9.6437
90919-A2004	9.6438
90919-A2005	9.6437
90919-A2006	9.6358
90919-A2007	9.6438
90919-A2008	9.6437
90919-C2002	9.6358
90919-C2004	9.6437
90919-C2006	9.6358
90919-T2001	9.6358
90919-T2002	9.6361
90919-T2005	9.6358
90919-T2006	9.6361
90919-T2008	9.6358
90919-W2001	9.6361
90919-W2002	9.6359
90998-99001	4.9879
90998-99002	4.9879
98989-01161	1.3522HDV
SU001-01125	9.6509

VALEO	
1203	0.0323
18 137	3.7683RS
22 321	2.7658PHT
23 263	1.3664
2790	9.6001D
71 129	1.3656
71 133	1.3655
71 974	1.3661
72 192	3.7681
243 408	1.4946M

VALEO	
243 410	1.4949M
243 592	1.5945
243 758	0.0628
243 842	2.7677PHT
243 870	2.7663PHT
243 871	2.7672PHT*M
243 876	2.7922
243 881	2.8625
243 882	2.7480PHT
243 886	2.7530/11PHT
243 887	2.8094PHT
243 889	2.7681PHT
243 890	2.7530/22PHT
243 893	2.8211PHT
243 910	3.7696RS
243 964	3.7697
243 965	3.7573/15RS
243 969	3.7573/12RS
243 970	3.7614
244 512	2.7686PHT*M
245 001	9.6006
245 027	9.6005
245 039	9.6055
245 040	9.6088
245 041	9.6089
245 042	9.6040
245 043	9.6241
245 049	9.6008
245 052	9.6058
245 054	9.6007
245 057	9.6172
245 059	9.6003
245 060	9.6009
245 062	9.6011
245 064	9.6025
245 066	9.6255
245 067	9.6256
245 068	9.6128
245 071	9.6274
245 076	9.6255
245 077	9.6256
245 079	9.6265
245 080	9.6078
245 082	9.6094
245 083	9.6003
245 509	9.4029
245 510	9.4005
245 516	9.4036
245 519	9.4004
245 521	9.4007
245 527	9.4020
245 531	9.8114
245 536	9.4034
245 550	9.4052
248 880	3.8125
248 881	3.7701
248 885	3.8259
248 888	2.7680PHT
248 889	2.7681PHT
520 004	9.6001D
520 023	9.6001D
520 064 A	9.6007
520 073	9.6005
582 018	1.3686
582 133	1.3691/3
582 156	1.3691/5
582 169	0.0334
582 199	1.3691/6
582 309	1.3691/22
582 482	1.3691/26*P
607 453	0.0323
608 640	1.3667
618 015	1.3676
618 642	1.3691/1
660 740	3.7689RS
661 920	2.7658PHT

VALEO	
662 165	2.7654PHT
662 414	2.7649PHT
662 434	2.7641
664 203	3.7694
664 225	3.7688
664 369	2.7665PHT
664 518	3.7696RS
664 813	2.7659PHT
664 895	3.7691
665 561	0.0334
666 349	2.7668PHT
666 867	3.7699RS
667 287	2.7667PHT
667 308	2.7679PHT
A 422	1.3455HDVS
A4037	2.7566PHT
A4050	2.7573PHT
A4522	3.7593
A4534	3.7596
B 15	0.0179/112
B 414	1.2534HDVS
B 415	1.2540
B 429	1.2549HDVS
B 721	0.0179/96
B 732	0.0179/157
B 817	2.7481PHT
B 820	2.7493PHT
B 821	2.7494PHT
B 822	2.7508PHT
B 824	2.7509PHT
B 825	2.7521PHT
B 826	2.7524PHT
B 827	2.7529PHT
B 828	2.7530/1PHT
B 882	2.7480PHT
B 886	2.7530/11PHT
B 890	2.7530/22PHT
B 914	3.7512RS
B 915	3.7523RS
B 916	3.7525RS
B 917	3.7555RS
B 918	3.7556RS
B 919	3.7559RS
B 921	3.7524RS
B 922	3.7573/12RS
B 923	3.7573/14RS
B 924	3.7573/16RS
B 925	3.7573/21RS
B 965	3.7573/15RS
B 969	3.7573/12RS
B4025	2.7476PHT
B4027	2.7479PHT
B4514	3.7514RS
B4515	3.7521RS
B4516	3.7512RS
B4528	3.7526RS
CB 001	1.6854
CB 002	1.2534HDVS
CB 003	1.4143HDV
CB 004	1.3455HDVS
CB 005	1.3686
CB 006	1.3691/11U
CB 007	1.3691/12U
CB 008	1.3724
CB 011	1.3655
CB 014	1.4942
CB 017	1.3691/5
CB 018	1.3691/3
CB 019	1.3691/6
CB 021	1.3691/22
CB 027	1.3656
CB 029	1.3661
CB 030	1.3664
CB 031	1.4689
CB 033	1.3511HDV
CB 034	1.4456HDV

VALEO	
CB 035	1.5084
CB 036	1.4946M
CB 039	1.3676
CB 042	1.2540
CB 043	1.2549HDVS
CB 044	1.4920
CB 045	1.4932
CB 046	1.4939
CB 047	1.4940
CB 048	1.4683MHDV
CB 050	1.4144HDV
CB 052	1.3726
CB 055	1.4949M
CB 060	1.3691/1
CB 070	1.3667
CB 304	0.0179/112
CB 310	0.0617
CB 318	0.0323
CB 319	0.0334
CB 331	0.0179/96
CB 336	0.0179/157
CB 338	0.0627
CB 344	0.0323
CB 601	2.7493PHT
CB 602	2.7494PHT
CB 603	2.7509PHT
CB 604	2.7509PHT
CB 605	2.7529PHT
CB 606	2.7530/1PHT
CB 607	2.8096PHT
CB 608	2.8209PHT
CB 609	2.7649PHT
CB 610	2.7566PHT
CB 611	2.7783
CB 612	2.7479PHT
CB 613	2.8078
CB 614	2.8169
CB 618	2.8543
CB 624	2.8190
CB 625	2.7658PHT
CB 626	2.7658PHT
CB 627	2.7641
CB 628	2.7476PHT
CB 631	2.7659PHT
CB 632	2.7674PHT
CB 633	2.7654PHT
CB 635	2.8198PHT
CB 636	2.8204PHT
CB 640	2.7667PHT
CB 641	2.7573PHT
CB 643	2.7679PHT
CB 645	2.7665PHT
CB 646	2.7668PHT
CB 649	2.7723PHT
CB 651	2.7680PHT
CB 652	2.7681PHT
CD 001	3.7691
CD 002	3.7688
CD 003	3.7694
CD 005	3.7689RS
CD 006	3.7681
CD 007	3.7593
CD 008	3.7885
CD 009	3.7514RS
CD 010	3.7521RS
CD 011	3.7512RS
CD 012	3.8237
CD 013	3.8112
CD 016	3.7683RS
CD 017	3.8242RS
CD 018	3.7512RS
CD 019	3.7523RS
CD 020	3.7555RS
CD 021	3.7556RS
CD 022	3.7559RS
CD 024	3.7524RS

VALEO	
CD 025	3.7573/12RS
CD 026	3.7573/14RS
CD 027	3.7573/16RS
CD 028	3.7573/21RS
CD 029	3.8241
CD 030	3.8251RS
CD 031	3.8254RS
CD 032	3.8260
CD 033	3.7560RS
CD 034	3.8126RS
CD 035	3.8247RS
CD 036	3.8255RS
CD 038	3.7596
CD 040	3.7696RS
CD 042	3.7526RS
CD 048	3.7699RS
CD 049	3.7758
CD 050	3.7701
CD 051	3.7525RS
CD 303	9.6001D
CD 308	9.6005
CD 309	9.6001D
CD 315	9.6001D
CD 321	9.6006
CD 323	9.6001D
CD 324	9.6002
CD 325	9.6007
CD 328	9.6008
CD 330	9.6055
CD 331	9.6088
CD 334	9.6089
CD 338	9.6040
CD 339	9.6241
CD 440	9.6172
CD 442	9.6003
CD 443	9.6011
CD 444	9.6009
CD 446	9.6025
CD 605	9.4029
CD 856	9.4005
CD 859	8.3619
CK 006	1.3691/26*P
CK 007	1.3691/26*P
D 204	0.0334
D 214	1.3691/26*P
D 236	1.3691/26*P
D 301	1.3664
D 303	1.3656
D 304	1.3655
D 306	1.3661
D 309	1.3686
D 312	1.3691/3
D 313	1.3691/5
D 316	1.3691/6
D 323	1.3691/22
D 329	1.3667
D 332	1.3676
D 333	1.3691/1
D 337	1.3691/11U
D 338	1.3691/12U
D 396	3.7704
D 512	2.7686PHT*M
D 703	0.0323
D 707	0.0334
D 708	0.0323
D 709	0.0856
D 801	2.7658PHT
D 805	2.7658PHT
D 806	2.7654PHT
D 807	2.7649PHT
D 808	2.7641
D 810	2.7665PHT
D 811	2.7659PHT
D 812	2.7668PHT
D 814	2.7667PHT
D 815	2.7679PHT

VALEO	
D 816	2.7674PHT
D 842	2.7677PHT
D 870	2.7663PHT
D 871	2.7672PHT*M
D 881	3.7704
D 888	2.7680PHT
D 889	2.7681PHT
D 901	3.7683RS
D 902	3.7681
D 905	3.7689RS
D 908	3.7694
D 909	3.7688
D 910	3.7696RS
D 911	3.7691
D 913	3.7699RS
D 936	3.7704
D 964	3.7697
E 456	1.3726
E 833	2.7716
E 928	3.8229
F 420	1.4143HDV
F 421	1.4144HDV
F4036	2.7783
F4521	3.7885
J 436	1.3511HDV
J 438	1.4456HDV
J 454	1.3522HDV
J 830	2.7593
J 836	2.8322/9
J 876	2.7922
J 927	3.7614
J 970	3.7614
L 431	1.4683MHDV
L 453	1.4689
L 837	2.8096PHT
L 880	3.8125
L 887	2.8094PHT
L 935	3.8126RS
L4035	2.8078
L4520	3.8112
M 20	0.0617
M 32	0.0397
M 34	0.0627
M 408	1.4946M
M 410	1.4949M
M 416	1.4932
M 417	1.4940
M 418	1.4939
M 419	1.4920
M 432	1.4942
M 450	1.3724
M 459	1.4949
M 758	0.0628
M 840	2.8209PHT
M 881	2.8625
M 885	3.8259
M 893	2.8211PHT
M 930	3.8241
M 931	3.8251RS
M 932	3.8254RS
M 933	3.8260
M 934	3.7560RS
M4029	2.8169
M4043	2.8190
M4045	2.8204PHT
M4047	2.7723PHT
M4048	2.8198PHT
M4518	3.8237
M4530	3.8242RS
M4533	3.8247RS
M4535	3.7758
M4536	3.8255RS
MTR-01	9.4005
S 406	1.6854
S4010	2.8543
U 592	1.5945

VALEO	
2 524 134	2.7674PHT
2 525 628	2.7678PHT*M
2 526 009	9.6006
2 526 015	9.6002
2 526 017	9.6001D
2 526 017 0	9.6001D
2 526 023	9.6007
2 526 026	9.6055
2 526 026 A	9.6055
2 526 030	9.6008
2 526 034	9.6128
2 526 035 A	9.6089
2 526 037 A	9.6088
2 526 039	9.6089
2 526 040 A	9.6088
2 526 048	9.6007
2 526 048 A	9.6007
2 526 049	9.6040
2 526 050	9.6241
2 526 051	9.6255
2 526 052	9.6256
2 526 055	9.6172
2 526 055 A	9.6172
2 526 060	9.6003
2 526 062	9.6011
2 526 063	9.6009
2 526 071	9.6025
2 526 073	9.6274
2 526 079	9.6265
2 526 081	9.6094
2 526 082	9.6003
2 526 110	9.6255
2 526 111	9.6256
2 526 208	9.6305
2 528 001	9.4029
2 528 001 A	9.4029
2 528 008	9.4005
2 528 008 A	9.4005
2 537 077	2.7680PHT
2 537 260	3.7704
2 553 495	2.7681PHT
2 553 499 0	3.7701
2 558 654	3.7696RS
2 558 743	3.7701
2 559 115	3.7697
2 590 166	1.3691/26*P
2 590 251	0.0856
2 590 253	1.3691/11U
2 590 254	1.3691/12U
2 590 832	9.6001D
2 590 841	1.3522HDV
2 590 843	1.3726
2 590 846	1.4949
2 590 862	0.0179/96
2 590 871	0.0179/157
2 590 874	2.7481PHT
2 590 877	2.7493PHT
2 590 878	2.7494PHT
2 590 879	2.7508PHT
2 590 880	2.7509PHT
2 590 881	2.7521PHT
2 590 882	2.7524PHT
2 590 883	2.7529PHT
2 590 884	2.7530/1PHT
2 590 886	2.7593
2 590 889	2.7716
2 590 892	2.8322/9
2 590 893	2.8096PHT
2 590 896	2.8209PHT
2 590 897	3.7512RS
2 590 898	3.7523RS
2 590 899	3.7525RS
2 590 900	3.7555RS
2 590 901	3.7556RS
2 590 902	3.7559RS
2 590 904	3.7524RS

VALEO

2 590 905	3.7573/12RS
2 590 906	3.7573/14RS
2 590 907	3.7573/16RS
2 590 908	3.7573/21RS
2 590 910	3.7614
2 590 911	3.8229
2 590 913	3.8241
2 590 914	3.8251RS
2 590 915	3.8254RS
2 590 916	3.8260
2 590 917	3.7560RS
2 590 918	3.8126RS
2 590 935	2.7677PHT
2 590 945	8.3619
2 591 820	1.5084
2 591 821	1.4949M
2 591 823	1.4946M
2 591 824	0.0627
2 591 838	3.7573/12RS
2 595 007	9.4004
2 595 009	9.4007
2 595 013	9.4020
2 595 016	9.4036
2 595 020	9.8114
2 595 025	9.4034
2 595 041	9.4052
21597716-4	9.6376
21603121-9	9.6332
21603800-7	9.6376
245098	9.6308
245104	9.6332
245139	9.6432
245142	9.6329
245178	9.6361
26951960-3	9.6305
400 01503	1.6854
400 10603	1.2534HDVS
400 10703	1.2540
400 10803	1.4932
400 10903	1.4940
400 11003	1.4939
400 11103	1.4920
400 11203	1.4143HDV
400 11303	1.4144HDV
400 11403	1.3455HDVS
400 11703	1.2549HDVS
400 11903	1.4683MHDV
400 12003	1.4942
400 12403	1.3511HDV
400 12603	1.4456HDV
400 20903	1.3724
400 21203	1.4689
402 60303	3.7514RS
402 60403	3.7521RS
402 60503	3.7512RS
402 60703	3.8237
402 60903	3.8112
402 61003	3.7885
402 61103	3.7593
403 53803	2.8543
403 80603	2.7479PHT
403 80703	2.7476PHT
403 80903	2.8169
403 81503	2.7783
403 81603	2.7566PHT
403 81803	2.8078
413 80403	2.8190
413 80603	2.8204PHT
413 80803	2.7723PHT
413 80903	2.8198PHT
413 81103	2.7573PHT
414 50303	3.7526RS
414 50503	3.8242RS
414 50803	3.8247RS
414 50903	3.7596
414 51003	3.7758

VALEO

414 51103	3.8255RS
430 40603	0.0179/112
430 41003	0.0617
430 90703	0.0397
430 90903	0.0627
441 19102	9.6001D
7 350 370 2	9.4005
735 02 602	9.4029
735 03 702	9.4005
949033	2.7508PHT
949034	2.7521PHT
949035	2.7716
949041	2.7573PHT
949042	3.7596

VAUXHALL

10458316	9.6350
12635672	9.6531
12670053	9.6531
12697989	9.6531
19005212	9.6299
25195107	9.6447
25198623	9.6447
3639500	9.6509
3639845	9.6520
5 97 091	9.6375
55561655	9.6445
55573735	9.6447
55577898	9.6447
55579072	9.6447
55584404	9.6445
7079424	3.8107
7100387	2.8070
7101586	3.8107
90006145	9.4004
90114676	9.4004
90140187	9.4004
90240252	9.6094
90277970	9.6091
90458250	9.6172
90506102	9.6289
90543059	9.6298
90543253	9.6300
91159996	9.6332
9119567	9.6408
9198834	9.6407
93161188	9.6332
93161948	9.6332
93177212	9.6300
93180806	9.6298
95512934	9.6342
95517924	9.6350
95528319	9.6447
9671214580	9.6509
9675390980	9.6520

VOLVO

076978	3.7521RS
0769786	3.7521RS
1269920	2.7530/6PHT*A
12699203	2.7530/6PHT*A
1269921	3.7573/19RS
12699211	3.7573/19RS
1275174	9.8123
1275284	4.7061
12752846	4.7061
1275603	4.7059
1276620	8.2653
1306169	1.2534HDVS
13061692	1.2534HDVS
1332584	9.4034

VOLVO

13325840	9.4034
1336240	3.7555RS
13362405	3.7555RS
1336241	3.7555RS
13362413	3.7555RS
1346787	3.7573/18RS
13467873	3.7573/18RS
1346788	2.7527PHT*A
13467881	2.7527PHT*A
1346792	8.2722
13467923	8.2722
1357418	3.7573/22RS
13574181	3.7573/22RS
1367052	3.7573/22RS
13670526	3.7573/22RS
1367783	3.7573/47RS
13677836	3.7573/47RS
1389425	3.7573/21RS
13894258	3.7573/21RS
233260	2.7462
2332609	2.7462
233910	1.2529HDV
2339109	1.2529HDV
238036	1.2521
2380368	1.2521
238859	1.2521
2388593	1.2521
240149	1.2547
2401495	1.2547
240247	3.7512RS
2402477	3.7512RS
240305	3.7512RS
2403053	3.7512RS
241652	1.2549HDVS
2416527	1.2549HDVS
241653	2.7476PHT
2416535	2.7476PHT
241655	2.7462
241664	1.2534HDVS
2416642	1.2534HDVS
241669	2.7472PHT
2416691	2.7472PHT
243460	1.2534HDVS
243632	2.7476PHT
2436327	2.7476PHT
243657	3.7524RS
2436574	3.7524RS
243658	2.7481PHT
2436582	2.7481PHT
243796	3.7525RS
243797	2.7479PHT
2437978	2.7479PHT
243801	1.2562
2438018	1.2562
243803	2.7481PHT
2438034	2.7481PHT
243903	3.7525RS
2439032	3.7525RS
243922	3.7523RS
2439222	3.7523RS
245664	1.2534HDVS
2456642	1.2534HDVS
2714830	4.8372
284509	3.7683RS
2845097	3.7683RS
30711786	9.6380
30713416	9.6348
30713417	9.6378
30731419	9.6381
30731424	4.7242
30735759	9.6432
3100134	1.3655
31001340	1.3655
3100770	3.7683RS
31007701	3.7683RS
3100771	2.7649PHT

VOLVO

31007719	2.7649PHT
3102885	0.0323
31028855	0.0323
31216444	9.6381
31359976	9.6432
31375294	9.6380
31422170	9.6381
3213390	3.7696RS
32133902	3.7696RS
3213392	2.7659PHT
32133928	2.7659PHT
3267443	1.3655
32674434	1.3655
3277417	2.7654PHT
32774176	2.7654PHT
3277441	0.0323
32774416	0.0323
3277442	2.7649PHT
32774422	2.7649PHT
32774424	2.7649PHT
3277840	1.3455HDVS
32778409	1.3455HDVS
3277854	2.7566PHT
32778540	2.7566PHT
3277855	3.7595RS
32778557	3.7595RS
3287598	2.7659PHT
32875981	2.7659PHT
3287599	3.7696RS
32875999	3.7696RS
3287677	9.6007
32876773	9.6007
32879249	4.9332
32879256	4.9332
3342161	2.7663PHT
33421611	2.7663PHT
3342163	3.7697
33421637	3.7697
3342164	2.7670
33421645	2.7670
3342440	2.7672PHT*M
33424409	2.7672PHT*M
3342441	3.7697
3342442	2.7669PHT
33424425	2.7669PHT
3342443	2.7670
33424433	2.7670
33428467	4.8415
33428467	4.8417
3342862	2.7669PHT
33428624	2.7669PHT
3342863	3.7697
33428632	3.7697
3342864	2.7670
33428640	2.7670
33444092	4.9332
34181545	4.8415
34333625	4.8417
3449620	3.7697
3501944	2.7530/30PHT*A
35019447	2.7530/30PHT*A
35312776	4.8372
3638411	9.6001D
36384113	9.6001D
546279	2.7479PHT
70863020	9.6255
708630207	9.6255
70863021	9.6256
708630215	9.6256
8677837	9.6378
869474	9.6380
8694741	9.6380
870690	2.7462
8706905	2.7462
9125601	9.6348
9135701	4.7064

VOLVO

9445258	4.7064
9487221	9.6381

VW

SP 181	1.2547
SP 183	1.2529HDV
SP 184	1.2529HDV
SP 186	1.2532HDV
00A 905 105	9.6216
021 905 207	2.7530/3PHT*A
021 905 225	3.7567RS
021 905 225 B	3.7573/48RS
021 905 225 C	3.7573/49RS
022 905 100 A	9.6335
022 905 100 AC	9.6335
022 905 100 B	9.6334
022 905 100 D	9.6335
022 905 100 E	9.6334
022 905 100 G	9.6335
022 905 100 H	9.6334
022 905 100 K	9.6335
022 905 100 L	9.6334
022 905 100 N	9.6335
022 905 100 P	9.6334
022 905 100 S	9.6334
022 905 100 T	9.6334
022 905 715	9.6334
022 905 715 B	9.6334
022 905 715 C	9.6335
022 905 715 D	9.6334
023 905 207	2.7530/1PHT*A
026 905 205 AA	8.2659*N
026 905 205 AB	8.2659*N
026 905 205 AC	8.2659*N
026 905 205 AD	8.2659*N
026 905 205 AF	8.2659*N
026 905 205 AG	8.2659*N
026 905 205 AH	8.2659*N
026 905 205 AJ	8.2659*N
026 905 205 AK	8.2659*N
026 905 205 G	8.2659*N
026 905 205 H	8.2659*N
026 905 205 J	8.2659*N
026 905 205 L	8.2659*N
026 905 205 N	8.2659*N
026 905 205 P	8.2659*N
026 905 205 Q	8.2659*N
026 905 206	8.2659
026 905 206 A	8.2659*N
026 905 206 AC	8.2659*N
026 905 206 AD	8.2659*N
026 905 206 B	8.2659*N
026 905 206 C	8.2659*N
026 905 206 E	8.2659*N
026 905 206 F	8.2659*N
026 905 206 G	8.2659*N
026 905 206 H	8.2659*N
026 905 206 J	8.2659*N
026 905 206 K	8.2659*N
026 905 206 T	8.2659*N
026 905 207	2.7529PHT
026 905 207 2	2.7494PHT
026 905 207 A	2.7668PHT
026 905 209	2.7529PHT
026 905 225	3.7573/16RS
026 905 225 1	3.7555RS
026 905 225 2	3.7573/21RS
026 905 225 K	3.7699RS
026 905 359 2	8.2733
027 905 205 F	8.2659*N
027 905 205 H	8.2659*N
027 905 205 M	8.2659*N
027 905 205 Q	8.2659*N
027 905 205 R	8.2659*N

VW

027 905 207	2.7494PHT
027 905 207 A	2.7530/36PHT
027 905 225	3.7525RS
028 905 207 C	2.7649PHT
030 905 065	8.2723
030 905 065 A	8.2723
030 905 065 B	8.2723
030 905 205	8.2693*N
030 905 205 A	8.2693*N
030 905 205 AE	8.4982*N
030 905 205 B	8.2693*N
030 905 205 D	8.2693*N
030 905 205 J	8.2693*N
030 905 207	2.7494PHT
030 905 207 A	2.8216PHT
030 905 225 C	3.8257RS
030 905 430 J	4.9595
030 905 430 K	4.9595
030 905 430 L	4.9595
030 905 430 M	4.9595
030 905 430 N	4.9601
030 905 430 P	4.9601
030 905 430 Q	4.9601
030 905 430 R	4.9601
030 998 065	8.2693
030 998 065 A	8.2733*S
030 998 065 B	8.2734
032 905 106	9.8120
032 905 106 B	9.8120
032 905 106 D	9.8120
032 905 106 E	9.8120
032 905 106 F	9.8120
032 905 430 E	4.9569
032 905 430 F	4.9569
032 905 430 G	4.9569
032 905 430 H	4.9569
032 905 430 K	4.9723
032 905 430 L	4.9723
032 905 430 M	4.9723
032 905 430 N	4.9723
032 905 430 P	4.9640
032 905 430 P	4.9641
032 905 430 Q	4.9640
032 905 430 Q	4.9641
032 905 430 R	4.9640
032 905 430 R	4.9641
032 905 430 T	4.9640
032 905 430 T	4.9641
034 905 207	2.7530/1PHT*A
034 905 207 A	2.7530/1PHT*A
034 905 207 B	2.7530/1PHT*A
034 998 065	8.2719
035 905 105 A	9.6026
035 905 205	8.2653
035 905 205 A	8.2653*N
035 905 205 B	8.2653*N
035 905 205 C	8.2653*N
035 905 205 D	8.2653*N
035 905 205 E	8.2653*N
035 905 205 Q	8.2653*N
035 905 206 AF	8.2723*N
035 905 207	2.7493PHT
035 905 207 A	2.7493PHT
035 905 209 B	2.7530/1PHT
035 905 225	3.7573/16RS
035 905 225 B	3.7555RS
035 905 225 C	3.7559RS
035 905 225 D	3.7573/21RS
035 905 225 F	3.7573/21RS
035 905 315	8.2653
035 998 065 A	8.2719
035 998 065 A*	8.2731
035 998 065 A***	8.2731
036 905 100 A	9.6374
036 905 100 B	9.6374
036 905 100 C	9.6374

VW

036 905 100 D	9.6374
036 905 225 H	3.7556RS
036 905 295 B	0.0179/157
036 905 409 K	4.9575
036 905 430 AA	4.9575
036 905 430 AB	4.9575
036 905 430 AC	4.9575
036 905 430 AD	4.9575
036 905 430 AE	4.9575
036 905 430 D	4.9575
036 905 430 E	4.9575
036 905 430 F	4.9575
036 905 430 G	4.9575
036 905 430 H	4.9575
036 905 430 J	4.9575
036 905 430 K	4.9575
036 905 430 L	4.9575
036 905 430 M	4.9575
036 905 430 N	4.9575
036 905 430 P	4.9575
036 905 430 Q	4.9575
036 905 430 R	4.9575
036 905 430 S	4.9575
036 905 430 T	4.9575
036 905 715	9.6374
036 905 715 A	9.6374
036 905 715 C	9.6374
036 905 715 E	9.6374
036 905 715 F	9.6374
036 905 715 G	9.6374
036 905 715 H	9.6374
036 998 051	1.2549HDVS
036 998 051 A	1.2549HDVS
036 998 051 C	1.2549HDVS
036 998 051 D	1.2549HDVS
037 905 205 M	8.2723*N
037 905 207	2.7530/33PHT*A
039 905 225	3.7561RS
03D 905 115	9.6331
03D 905 115 A	9.6331
03D 905 115 B	9.6331
03D 905 115 C	9.6331
03D 905 115 D	9.6331
03D 905 115 E	9.6331
03D 905 115 F	9.6331
03D 905 115 G	9.6331
03D 905 715 A	9.6331
03F 905 409 B	4.7248
03F 905 430	4.7248
03F 905 430 A	4.7248
03F 905 430 B	4.7248
03F 905 430 C	4.7248
03F 905 430 D	4.7248
03F 905 430 E	4.7248
03F 905 430 F	4.7248
03F 905 430 G	4.7248
040 905 225	3.7545RS
040 905 359 1	8.2660
041 905 207 2	2.7498
043 905 115 A	9.6001D
043 905 115 C	9.6001D
043 905 207	2.7479PHT
043 905 225	3.7525RS
046 905 105	9.6069
047 905 205 C	8.2653*N
048 905 105 1	9.6068
049 905 206 D	8.2659*N
049 905 206 F	8.2659*N
049 905 206 G	8.2659*N
049 905 207	2.7479PHT
049 905 225 C	3.7573/15RS
049 905 225 D	3.7573/15RS
04C 905 110 A	9.6499
04C 905 110 B	9.6499
04C 905 110 D	9.6499
04C 905 110 E	9.6499

VW

04C 905 110 H	9.6499
04C 905 110 J	9.6499
04C 905 110 L	9.6499
04E 905 110	9.6499
04E 905 110 A	9.6499
04E 905 110 B	9.6499
04E 905 110 E	9.6499
04E 905 110 H	9.6499
04E 905 110 K	9.6499
04E 905 110 L	9.6499
04E 905 110 P	9.6499
050 905 205	8.2659
050 905 205 A	8.2659*N
050 905 205 AH	8.2723*N
050 905 205 AL	8.2723*N
050 905 205 B	8.2659*N
050 905 205 BA	8.2723*N
050 905 205 C	8.2659*N
050 905 205 D	8.2659*N
050 905 205 E	8.2659*N
050 905 205 F	8.2659*N
050 905 205 H	8.2659*N
050 905 205 J	8.2659*N
050 905 205 K	8.2659*N
051 905 205	8.2659*N
051 905 205 B	8.2733*N
051 905 205 C	8.2733*N
051 905 207	2.7530/36PHT
051 905 225	3.7573/21RS
052 905 105	9.6001D
052 905 225	3.7526RS
052 905 225 A	3.7689RS
052 905 225 B	3.7573/14RS
052 905 225 C	3.7573/21RS
052 905 295	0.0179/95
052 998 051	1.2549HDVS
052 998 051 D	1.2549HDVS
052 998 065	8.2723
053 905 225 1	3.7561RS
053 905 431	4.9356
053 905 433	4.9356
055 905 207	2.7494PHT
055 905 225	3.7527RS
055 905 225 B	3.7555RS
056 905 205 L	8.2659
058 905 101	9.6254S
058 905 105	9.6254S
058 905 207	2.7479PHT
058 905 409 A	4.9491
058 905 447 C	4.9491
058 998 051	1.2562
058 998 051 A	1.2562
058 998 051 B	1.2562
059 905 207	2.7476PHT
059 905 225	3.7521RS
059 998 015	1.2534HDVS
059 998 051	1.2534HDVS
059 998 051 B	1.2534HDVS
060 905 295	0.0179/96
066 905 100	9.6337
066 905 100 B	9.6337
066 905 100 C	9.6337
066 905 100 D	9.6337
066 905 100 G	9.6337
066 905 715	9.6337
06A 905 115	9.6329
06A 905 115 A	9.6329
06A 905 115 B	9.6329
06A 905 115 C	9.6329
06A 905 115 D	9.6329
06A 905 409 L	4.9585
06A 905 409 N	4.7223
06A 905 409 P	4.9585
06A 905 430 AA	4.9484
06A 905 430 AF	4.9585
06A 905 430 AH	4.9585

VW

06A 905 430 AJ	4.9585
06A 905 430 AK	4.7223
06A 905 430 AL	4.7223
06A 905 430 AM	4.7223
06A 905 430 AN	4.7223
06A 905 430 AP	4.9585
06A 905 430 AQ	4.9585
06A 905 430 D	4.9479
06A 905 430 E	4.9479
06A 905 430 F	4.9479
06A 905 430 G	4.9479
06A 905 430 H	4.9585
06A 905 430 J	4.9585
06A 905 430 K	4.9585
06A 905 430 L	4.9585
06A 905 430 M	4.9489
06A 905 430 N	4.9489
06A 905 430 P	4.9489
06A 905 430 Q	4.9489
06A 905 430 R	4.9484
06A 905 430 S	4.9484
06A 905 430 T	4.9484
06B 905 106 A	9.8120
06B 905 115	9.6345
06B 905 115 B	9.6345
06B 905 115 D	9.6329
06B 905 115 E	9.6345
06B 905 115 G	9.6329
06B 905 115 H	9.6329
06B 905 115 J	9.6329
06B 905 115 L	9.6329
06B 905 115 M	9.6329
06B 905 115 N	9.6329
06B 905 115 P	9.6329
06B 905 115 Q	9.6329
06B 905 115 R	9.6329
06B 905 115 S	9.6329
06B 905 430	4.9585
06B 905 430 A	4.9585
06B 905 430 B	4.9585
06B 905 430 C	4.9585
06B 905 431 A	4.9585
06B 905 431 C	4.9585
06B 905 433 A	4.9585
06B 905 435 A	4.9585
06B 905 437 A	4.9585
06C 905 115 A	9.6336
06C 905 115 B	9.6336
06C 905 115 C	9.6329
06C 905 115 D	9.6336
06C 905 115 E	9.6336
06C 905 115 F	9.6336
06C 905 115 G	9.6336
06C 905 115 H	9.6336
06C 905 115 K	9.6336
06C 905 115 L	9.6336
06C 905 115 M	9.6336
06D 905 115	9.6327
06D 905 115 A	9.6327
06D 905 115 C	9.6327
06D 905 115 D	9.6327
06D 905 115 F	9.6327
06D 905 115 G	9.6327
06D 905 115 K	9.6327
06E 905 115	9.6327
06E 905 115 A	9.6327
06E 905 115 B	9.6327
06E 905 115 C	9.6327
06E 905 115 D	9.6327
06E 905 115 E	9.6327
06E 905 115 F	9.6327
06E 905 115 G	9.6327
06F 905 115	9.6326
06F 905 115 A	9.6326
06F 905 115 B	9.6326
06F 905 115 C	9.6326

VW

06F 905 115 E	9.6326
06F 905 115 F	9.6326
06H 905 110 D	9.6536
06H 905 110 E	9.6536
06H 905 110 F	9.6536
06H 905 110 G	9.6536
06H 905 110 H	9.6536
06H 905 110 L	9.6536
06H 905 115	9.6326
06H 905 115 A	9.6326
06H 905 115 B	9.6326
06K 905 110 K	9.6536
06L 905 110 A	9.6536
06L 905 110 B	9.6536
06L 905 110 C	9.6536
06L 905 110 D	9.6536
06L 905 110 E	9.6536
06L 905 110 F	9.6536
06L 905 110 H	9.6536
06L 905 110 K	9.6536
071 905 143	9.4074
071 905 225	3.7567RS
071 905 225 A	3.7567RS
073 905 207	2.7481PHT
073 905 207 B	2.7530/3PHT
073 905 225	3.7524RS
073 905 225 A	3.7573/17RS
073 998 051	1.2534HDVS
077 905 115 AA	9.6325
077 905 115 B	9.6333
077 905 115 C	9.6333
077 905 115 E	9.6333
077 905 115 F	9.6333
077 905 115 G	9.6325
077 905 115 H	9.6333
077 905 115 J	9.6325
077 905 115 K	9.6333
077 905 115 M	9.6325
077 905 115 P	9.6333
077 905 115 Q	9.6333
077 905 115 R	9.6325
077 905 115 S	9.6325
077 905 115 T	9.6333
077 905 205	2.7530/18PHT*A
077 905 207	2.7530/18PHT*A
07K 905 715	9.6326
07K 905 715 A	9.6326
07K 905 715 B	9.6326
07K 905 715 C	9.6326
07K 905 715 D	9.6326
07K 905 715 E	9.6326
07K 905 715 F	9.6326
07K 905 715 G	9.6326
111 905 207 B	2.7462
111 905 207 D	2.7476PHT
111 905 225 B	3.7518RS
111 905 225 C	3.7518RS
111 905 225 F	3.7514RS
111 905 225 G	3.7514RS
111 998 051	1.2547
111 998 053	1.2529HDV
111 998 055	1.2529HDV
111 998 059	1.2532HDV
111 998 063	1.2540
111 998 295	1.2534HDVS
113 905 207 A	2.7479PHT
113 905 207 B	2.7479PHT
113 905 207 C	2.7479PHT
113 905 225 E	3.7521RS
175 905 206 A	8.2659*N
181 905 225	3.7512RS
181 905 225 C	3.7525RS
181 998 053	1.2529HDV
191 905 115 A	9.6026
191 905 351 A	9.4007
191 905 351 B	9.4007

VW

211 905 115 B	9.6032
211 905 115 C	9.6032
211 905 115 D	9.6025
211 905 351	9.4004
211 905 351 A	9.4004
211 905 351 B	9.4004
211 905 351 D	9.4004
211 905 351 E	9.4004
221 100 019	9.6001D
251 905 115 A	9.6025
281 905 207	2.7494PHT
311 998 063	1.2534HDVS
311 998 063 1	1.2534HDVS
325 905 207 1	2.7529PHT
325 905 207 2	2.7494PHT
325 905 209 2	8.2653
357 905 105	9.6169
411 963 073	0.0130
477 905 206	8.2653
4A0 905 351	9.4051
4D0 905 351	9.4076
6N0 905 104	9.8114
701 905 104 A	9.8116
71 314 347	3.7545RS
71 314 348	2.7498
811 905 115	9.6027
867 905 105 A	9.6059
867 905 352	9.8114
892 031 048	2.7476PHT
892 031 090	1.2529HDV
892 031 520	3.7518RS
8D0 905 351	9.4072
J19 101 350 10	2.7630/43
J19 101 351 80	2.7599
J19 101 710 10	2.7613
J19 101 710 20	2.7614
J19 102 160 60	3.7627
J19 102 261 51	3.7614
J19 145 260 60	1.3511HDV
J90 919 021 97	9.6103
N 038 875 3	4.8727
N 038 885 1	4.8493
N 038 885 1	4.8725
N 038 885 1	4.8737
N 038 887 5	4.8493
N 038 908 5	4.8727
N10 050 201	4.8768
N10 050 201	4.9549
N10 050 205	4.8725
N10 050 205	4.8965
N10 052 601	4.8737
N10 052 704	4.8493
N10 052 704	4.9671
N10 052 706	4.8965
N10 052 706	4.9667
N10 052 801	4.9671
N10 052 805	4.9660
N10 052 808	4.7159
N10 052 808	4.9660
N10 052 808	4.9682
N10 052 809	4.8493
N10 052 809	4.9364
N10 052 809	4.9660
N10 052 812	4.7159
N10 052 812	4.9682
N10 052 815	4.9660
N10 052 903	4.9640
N10 052 903	4.9660
N10 052 903	4.9682
N10 052 904	4.9364
N10 052 904	4.9660
N10 052 904	4.9937
N10 052 907	4.7159
N10 052 907	4.8493
N10 052 907	4.8725
N10 052 907	4.9933

VW

N10 052 911	4.9580
N10 070 202	4.8768
N10 070 210	4.9549
N10 070 210	4.9551
N10 204 402	4.9353
N10 238 502	4.9356
N10 243 603	4.9667
N10 243 604	4.9667
N10 243 607	4.9551
N10 243 608	4.9667
N10 243 611	4.9353
N10 243 612	4.9667
N10 264 601	4.8965
N10 266 901	4.9356
N10 316 401	4.9932
N10 316 401	4.9933
N10 316 401	4.9937
N10 316 402	4.9932
N10 316 402	4.9933
N10 316 402	4.9937
N10 316 403	4.9932
N10 316 403	4.9933
N10 316 403	4.9937
N10 316 404	4.9932
N10 316 404	4.9933
N10 316 404	4.9937
N10 316 602	4.9932
N10 418 501	4.9580
N10 418 502	4.9580
N10 418 503	4.9580
N10 418 504	4.9580
N10 421 002	4.9932
N10 430 003	4.9569
N10 430 003	4.9641
ZBA 905 225 B	3.7525RS

YUGO

46600871	3.7575/1RS
4660870	2.7535/1PHT

ZASTAVA

1335050	2.8181
1335052	1.4940
1335055	3.8236RS
46600193	2.7479PHT
46600861	1.2805/1
46600871	3.7575/1RS
4660870	2.7535/1PHT
5248175	2.7479PHT

CROSS REFERENCE LIST OTHER MANUFACTURERS

·TABELLA COMPARATIVA ALTRI COSTRUTTORI ·TABLE DE COMPARAISON D'AUTRES FABRICANTS
·VERGLEICHSTABELLE ANDERE HERSTELLER ·TABLA DE EQUIVALENCIAS OTRAS FABRICANTES

POSSIBLE CROSS REFERENCE FROM OTHER MANUFACTURERS

- POSSIBILI CROSS REFERENCE DI ALTRI COSTRUTTORI
- RENVOIS POSSIBLES À D'AUTRES FABRICANTS
- MÖGLICHE QUERVERWEISE AUF ANDERE HERSTELLER
- POSIBLES REFERENCIAS CRUZADAS DE OTRAS FABRICANTES

1203	0.0323
1203 B	0.0323
1203 C	0.0323
1205	0.0323
1205 D	0.0323
1216	0.0323
8194	2.7649PHT
9500	0.0323
9534	0.0323
1203	0.0323
16 575	2.7658PHT
16 903	3.7691
18 132	2.7649PHT
18 137	3.7683RS
18 137	3.7683RS
18 435	2.7649PHT
19 401	2.7658PHT
22 321	2.7658PHT
22 321	2.7658PHT
22 946	2.7659PHT
23 263	1.3664
23 263	1.3664
27 620	2.8543
27 630	0.0856
27 637	0.0856
2790	9.6001D
47 430	2.7649PHT
49 423	3.7691
54 099	0.0856
69 211	0.0856
69 272	0.0856
71 129	1.3656
71 129	1.3656
71 133	1.3655
71 133	1.3655
71 974	1.3661
71 974	1.3661
72 192	3.7681
72 192	3.7681
72 196	2.7641
76 901	2.7649PHT
79 432	3.7683RS
79 874	0.0856
80	1.1806
C 1	0.0856
D 409	1.3656
D 4511	3.7691
J 438	1.4456HDV
P 17	0.0856
S 1	0.0856
S 406	1.6854
S 4010	2.8543
114	1.2547
116	1.2529HDV
141	1.2529HDV
141 F	1.2529HDV
142	1.2521
143	1.2529HDV
147	1.2529HDV
149	1.2560
157	1.2532HDV
161	1.2534HDVS
164	1.2549HDVS
166	1.2560
167	1.2564
171	1.2540
178	1.2571
179	1.2562
185	1.2583
186	1.2568
187	1.2571
192	1.2562
193	1.2534HDVS
194	1.2549HDVS
195	1.2534HDVS
196	1.2549HDVS
197	1.2562
243 408	1.4946M
243 410	1.4949M
243 592	1.5945
243 758	0.0628
243 842	2.7677PHT
243 870	2.7663PHT
243 871	2.7672PHT*M
243 876	2.7922
243 881	2.8625
243 882	2.7480PHT
243 886	2.7530/11PHT
243 887	2.8094PHT
243 889	2.7681PHT
243 890	2.7530/22PHT
243 893	2.8211PHT
243 910	3.7696RS
243 964	3.7697
243 965	3.7573/15RS
243 969	3.7573/12RS
243 970	3.7614
244 512	2.7686PHT*M
2443- 1	3.8241
245 001	9.6006
245 027	9.6005
245 039	9.6055
245 040	9.6088
245 041	9.6089
245 042	9.6040
245 043	9.6241
245 049	9.6008
245 052	9.6058
245 054	9.6007
245 057	9.6172
245 059	9.6003
245 060	9.6009
245 062	9.6011
245 064	9.6025
245 066	9.6255
245 067	9.6256
245 068	9.6128
245 071	9.6274
245 076	9.6255
245 077	9.6256
245 079	9.6265
245 080	9.6078
245 082	9.6094
245 083	9.6003
245 509	9.4029
245 510	9.4005
245 516	9.4036
245 519	9.4004
245 521	9.4007
245 527	9.4020
245 531	9.8114
245 536	9.4034
245 550	9.4052
248 880	3.8125
248 881	3.7701
248 885	3.8259
248 888	2.7680PHT
248 889	2.7681PHT
250	1.2534HDVS
251	1.2534HDVS
254	1.2534HDVS
258	1.2549HDVS
260	1.2583
263	1.2805/1
335	1.4927
343	1.4456HDV
343 V	1.4456HDV
344	1.3511HDV
352	1.3455HDVS
361	1.5084
362	1.3522HDV
368	1.5084
400 051	3.8106
405 468	3.8106
407 030	3.8107
408 355	3.8107
410 610	3.8106
413	1.3676
415 088	3.8107
418 726	3.8107
422	1.4920
422 A	1.4920
423 153	1.4683MHDV
438	1.4920
440	1.4923
448	1.4932
450 001	2.7649PHT
450 002	3.7683RS
450 005	0.0339
450 009	3.7683RS
451	1.4939
452	1.4940
453	1.7271
454	1.4942
455	1.4939
455	1.4943
460	1.3724
463	1.3726
466	1.4946M
467	1.4949M
469	1.4948M
4765	3.8229
520	1.3691/6
520 004	9.6001D
520 023	9.6001D
520 064	9.6007
520 064 A	9.6007
520 073	9.6005
520 073	9.6005
520 073 A	9.6005
521 008	9.4005
521 013	9.4005
525 409 D	2.7673PHT*M
525 536	2.7672PHT*M
525 536 B	2.7672PHT*M
525 536 F	2.7669PHT
525 551 B	8.3619*N
531	1.3691/26
532	1.3691/27
540	1.3686
542	1.3655
545	1.3691/2
546	1.3691/3
548	1.3691/5
567	1.3655
570	1.3656
570 V	1.3656
572	1.3661
573	1.6854
582 018	1.3686
582 018	1.3686
582 130	1.3691/2
582 133	1.3691/3
582 133	1.3691/3
582 156	1.3691/5
582 156	1.3691/5
582 169	0.0334
582 186	1.3691/6
582 191	1.3691/6
582 199	1.3691/6
582 199	1.3691/6
582 309	1.3691/22
582 309	1.3691/22
582 482	1.3691/26*P
582 482	1.3691/26*P
582 514	2.7663PHT
583	1.3664
585	1.3667
589	1.3691/11U
594	1.3691/11U
594 525	9.4005
595	1.3691/12U
596	1.3676
599 178	1.4689
599 183	1.4456HDV
599 210	2.8169
607 374	2.7658PHT
607 453	0.0323
607 453	0.0323
608 012	1.3655
608 460	0.0334
608 514	1.3691/11U
608 515	1.3691/11U
608 640	1.3667
608 640	1.3667
608 719	1.3691/12U
608 728	2.7658PHT
608 969	1.3691/11U
609 082	2.7658PHT
609 504	0.0334
610 891	3.7688
611 037	2.7649PHT
611 149	2.7649PHT
611 152	2.7649PHT
611 228	1.3691/11U
611 514	2.7658PHT
611 723	3.7691
618 015	1.3676
618 015	1.3676
618 431	1.3691/11U
618 435	2.7649PHT
618 642	1.3691/1
618 642	1.3691/1
618 701	1.3655
618 765	1.3691/1
620	1.4683MHDV
623	1.4689
623 V	1.4689
660 494	0.0334
660 501	0.0334
660 542	2.7658PHT
660 548	3.7688RS
660 588	2.7659PHT
660 740	3.7689RS
660 740	3.7689RS
660 996	2.7649PHT
661 004	3.7691
661 149	2.7649PHT
661 152	2.7649PHT
661 154	3.7691
661 156	3.7683RS
661 371	3.7688
661 450	2.7654PHT
661 764	3.7691
661 822	2.7654PHT
661 822 E	2.7654PHT
661 920	2.7658PHT
661 920	2.7658PHT
662 165	2.7654PHT
662 165	2.7654PHT
662 368	3.7691
662 414	2.7649PHT
662 414	2.7649PHT
662 434	2.7641
662 434	2.7641
662 471	2.7659PHT
662 540	0.0334
662 899	3.7689RS
662 913	2.7658PHT
663 205	2.7659PHT
663 296	0.0334
663 550	3.7694
663 869	3.7694
664 203	3.7694
664 203	3.7694
664 225	3.7688
664 225	3.7688
664 369	2.7665PHT
664 369	2.7665PHT
664 518	3.7696RS
664 518	3.7696RS
664 706	0.0339
664 813	2.7659PHT
664 813	2.7659PHT
664 895	3.7691
664 895	3.7691

665 561	0.0334
665 561	0.0334
665 752	2.7670
665 757	2.7663PHT
665 852	3.7697
666 203	2.7673PHT*M
666 349	2.7668PHT
666 349	2.7668PHT
666 592	2.7662PHT
666 777	3.7697
666 778	2.7673PHT*M
666 867	3.7699RS
666 867	3.7699RS
667 287	2.7667PHT
667 287	2.7667PHT
667 308	2.7679PHT
667 308	2.7679PHT
7083	1.4920
750	1.5945
803 34 A	9.4036
8415	3.8229
848 90 D	9.4036
908 081	0.0856
908 086	0.0856
908 148	0.0856
908 149	0.0856
908 247	1.6854
9575- 2	1.3664
9575- 3	1.3664
A 422	1.3455HDVS
A4037	2.7566PHT
A4050	2.7573PHT
A4522	3.7593
A4534	3.7596
B 15	0.0179/112
B 414	1.2534HDVS
B 415	1.2540
B 429	1.2549HDVS
B 721	0.0179/96
B 732	0.0179/157
B 817	2.7481PHT
B 820	2.7493PHT
B 821	2.7494PHT
B 822	2.7508PHT
B 824	2.7509PHT
B 825	2.7521PHT
B 826	2.7524PHT
B 827	2.7529PHT
B 828	2.7530/1PHT
B 882	2.7480PHT
B 886	2.7530/11PHT
B 890	2.7530/22PHT
B 914	3.7512RS
B 915	3.7523RS
B 916	3.7525RS
B 917	3.7555RS
B 918	3.7556RS
B 919	3.7559RS
B 921	3.7524RS
B 922	3.7573/12RS
B 923	3.7573/14RS
B 924	3.7573/16RS
B 925	3.7573/21RS
B 965	3.7573/15RS
B 969	3.7573/12RS
B4025	2.7476PHT
B4027	2.7479PHT
B4514	3.7514RS
B4515	3.7521RS
B4516	3.7512RS
B4528	3.7526RS
BD 12-2	9.6001D
CB 001	1.6854
CB 002	1.2534HDVS
CB 003	1.4143HDV
CB 004	1.3455HDVS
CB 005	1.3686
CB 006	1.3691/11U
CB 007	1.3691/12U
CB 008	1.3724
CB 011	1.3655
CB 014	1.4942
CB 017	1.3691/5
CB 018	1.3691/3
CB 019	1.3691/6
CB 021	1.3691/22
CB 027	1.3656
CB 029	1.3661
CB 030	1.3664
CB 031	1.4689
CB 033	1.3511HDV
CB 034	1.4456HDV
CB 035	1.5084
CB 036	1.4946M
CB 039	1.3676
CB 042	1.2540
CB 043	1.2549HDVS
CB 044	1.4920
CB 045	1.4932
CB 046	1.4939
CB 047	1.4940
CB 048	1.4683MHDV
CB 050	1.4144HDV
CB 052	1.3726
CB 055	1.4949M
CB 060	1.3691/1
CB 070	1.3667
CB 304	0.0179/112
CB 310	0.0617
CB 318	0.0323
CB 319	0.0334
CB 331	0.0179/96
CB 336	0.0179/157
CB 338	0.0627
CB 344	0.0323
CB 601	2.7493PHT
CB 602	2.7494PHT
CB 603	2.7509PHT
CB 604	2.7509PHT
CB 605	2.7529PHT
CB 606	2.7530/1PHT
CB 607	2.8096PHT
CB 608	2.8209PHT
CB 609	2.7649PHT
CB 610	2.7566PHT
CB 611	2.7783
CB 612	2.7479PHT
CB 613	2.8078
CB 614	2.8169
CB 618	2.8543
CB 624	2.8190
CB 625	2.7658PHT
CB 626	2.7658PHT
CB 627	2.7641
CB 628	2.7476PHT
CB 631	2.7659PHT
CB 632	2.7674PHT
CB 633	2.7654PHT
CB 635	2.8198PHT
CB 636	2.8204PHT
CB 640	2.7667PHT
CB 641	2.7573PHT
CB 643	2.7679PHT
CB 645	2.7665PHT
CB 646	2.7668PHT
CB 649	2.7723PHT
CB 651	2.7680PHT
CB 652	2.7681PHT
CD 001	3.7691
CD 002	3.7688
CD 003	3.7694
CD 005	3.7689RS
CD 006	3.7681
CD 007	3.7593
CD 008	3.7885
CD 009	3.7514RS
CD 010	3.7521RS
CD 011	3.7512RS
CD 012	3.8237
CD 013	3.8112
CD 016	3.7683RS
CD 017	3.8242RS
CD 018	3.7512RS
CD 019	3.7523RS
CD 020	3.7555RS
CD 021	3.7556RS
CD 022	3.7559RS
CD 024	3.7524RS
CD 025	3.7573/12RS
CD 026	3.7573/14RS
CD 027	3.7573/16RS
CD 028	3.7573/21RS
CD 029	3.8241
CD 030	3.8251RS
CD 031	3.8254RS
CD 032	3.8260
CD 033	3.7560RS
CD 034	3.8126RS
CD 035	3.8247RS
CD 036	3.8255RS
CD 038	3.7596
CD 040	3.7696RS
CD 042	3.7526RS
CD 048	3.7699RS
CD 049	3.7758
CD 050	3.7701
CD 051	3.7525RS
CD 303	9.6001D
CD 308	9.6005
CD 309	9.6001D
CD 315	9.6001D
CD 321	9.6006
CD 323	9.6001D
CD 324	9.6002
CD 325	9.6007
CD 328	9.6008
CD 330	9.6055
CD 331	9.6088
CD 334	9.6089
CD 338	9.6040
CD 339	9.6241
CD 440	9.6172
CD 442	9.6003
CD 443	9.6011
CD 444	9.6009
CD 446	9.6025
CD 605	9.4029
CD 856	9.4005
CD 859	8.3619
CK 006	1.3691/26*P
CK 007	1.3691/26*P
CL 1	9.6001D
CL 101	9.6001D
CS 19	1.4689
CS 25	1.3656
CS 75	1.4456HDV
CS 91	1.4689
CS 303	1.4456HDV
D 1203	0.0323
D 71129	1.3656
D 204	0.0334
D 214	1.3691/26*P
D 236	1.3691/26*P
D 301	1.3664
D 303	1.3656
D 304	1.3655
D 306	1.3661
D 309	1.3686
D 312	1.3691/3
D 313	1.3691/5
D 316	1.3691/6
D 323	1.3691/22
D 329	1.3667
D 332	1.3676
D 333	1.3691/1
D 337	1.3691/11U
D 338	1.3691/12U
D 396	3.7704
D 512	2.7686PHT*M
D 607453	0.0323
D 703	0.0323
D 707	0.0334
D 708	0.0323
D 709	0.0856
D 801	2.7658PHT
D 805	2.7658PHT
D 806	2.7654PHT
D 807	2.7649PHT
D 808	2.7641
D 810	2.7665PHT
D 811	2.7659PHT
D 812	2.7668PHT
D 814	2.7667PHT
D 815	2.7679PHT
D 816	2.7674PHT
D 842	2.7677PHT
D 870	2.7663PHT
D 871	2.7672PHT*M
D 881	3.7704
D 888	2.7680PHT
D 889	2.7681PHT
D 901	3.7683RS
D 902	3.7681
D 905	3.7689RS
D 908	3.7694
D 909	3.7688
D 910	3.7696RS
D 911	3.7691
D 913	3.7699RS
D 936	3.7704
D 964	3.7697
DAB 126	9.4036
DAB 134	9.4036
DAB 201	9.4005
DAB 202	9.4029
DAB 400	9.4004
DAB 402	9.4007
DAB 405	9.4034
DAB 703	9.4025
DAB 800	9.4020
DAB 954	9.8114
DC 625	2.8169
DC 627	2.8169
DCB 203	0.0334
DCB 207	0.0339
DCB 214	0.0856
DCB 221	0.0323
DCB 222	0.0856
DCB 225	0.0856
DCB 239	0.0334
DCB 243	0.0339
DCB 404	0.0179/112
DCB 413	0.0179/96
DCB 414	0.0179/95
DCB 427	0.0179/112
DCB 532	0.0179/157
DCB 633	0.0397
DCB 867	0.0617
DCB 874	0.0617
DCB 874E	0.0617
DCB 880	0.0627
DCB 881	0.0628
DCJ 233	0.0675/31
DDB 100	2.8104
DDB 105	2.8070
DDB 106	2.8075
DDB 108	2.8078
DDB 109	2.8096PHT
DDB 119	2.8091PHT
DDB 130	2.8098PHT
DDB 132	2.8099PHT
DDB 133	2.8100PHT
DDB 150	2.8083PHT
DDB 152	2.8085PHT
DDB 175	2.8091PHT
DDB 176	2.8091PHT

DDB 182	2.8094PHT
DDB 184	2.8093PHT
DDB 199	2.8078
DDB 208	2.7649PHT
DDB 208E	2.7649PHT
DDB 209	2.7654PHT
DDB 209E	2.7654PHT
DDB 217	2.7659PHT
DDB 221	2.7649PHT
DDB 222	2.7641
DDB 223	2.7658PHT
DDB 224	2.8543
DDB 230	2.7658PHT
DDB 231	2.7658PHT
DDB 231E	2.7658PHT
DDB 232	2.7659PHT
DDB 232E	2.7659PHT
DDB 235	2.7659PHT
DDB 237	2.7659PHT
DDB 238	2.7662PHT
DDB 245	2.7665PHT
DDB 246	2.7667PHT
DDB 247	2.7668PHT
DDB 248	2.7669PHT
DDB 249	2.7674PHT
DDB 250	2.7681PHT
DDB 251	2.7682PHT
DDB 252	2.7680PHT
DDB 302	2.7679PHT
DDB 304	2.7968
DDB 400	2.7494PHT
DDB 401	2.7493PHT
DDB 412	2.7479PHT
DDB 413	2.7479PHT
DDB 436	2.7462
DDB 437	2.7476PHT
DDB 438	2.7472PHT
DDB 439	2.7481PHT
DDB 440	2.7492PHT
DDB 441	2.7480PHT
DDB 442	2.7479PHT
DDB 450	2.7472PHT
DDB 453	2.7499
DDB 457	2.7492PHT
DDB 458	2.7490PHT
DDB 460	2.7490PHT
DDB 462	2.7509PHT
DDB 467	2.7508PHT
DDB 470	2.7479PHT
DDB 472	2.7479PHT
DDB 473	2.7479PHT
DDB 475	2.7508PHT
DDB 478	2.7521PHT
DDB 479	2.7523PHT
DDB 480	2.7523PHT
DDB 481	2.7524PHT
DDB 482	2.7498
DDB 483	2.7476PHT
DDB 484	2.7462
DDB 485	2.7479PHT
DDB 486	2.7530/3PHT
DDB 487	2.7530/1PHT
DDB 488	2.7523PHT
DDB 489	2.7490PHT
DDB 490	2.7527PHT
DDB 491	2.7528PHT
DDB 492	2.7530/4PHT
DDB 493	2.7530/5PHT
DDB 494	2.7530/11PHT
DDB 495	2.7530/10PHT
DDB 496	2.7530/7PHT
DDB 497	2.7530/9PHT
DDB 498	2.7530/8PHT
DDB 500	2.7517PHT
DDB 501	2.7530/27PHT
DDB 502	2.7530/19PHT
DDB 503	2.7530/26PHT
DDB 504	2.7530/28PHT
DDB 505	2.7530/23PHT
DDB 506	2.7530/27PHT
DDB 507	2.7530/17PHT
DDB 508	2.7530/18PHT
DDB 627	2.8169
DDB 627C	2.8169
DDB 628	2.7716
DDB 630	2.7714
DDB 633	2.7723PHT
DDB 701	2.7566PHT
DDB 705	2.7573PHT
DDB 751	2.7792PHT
DDB 752	2.7793PHT
DDB 754	2.7783
DDB 754C	2.7783
DDB 804	2.8176
DDB 806	2.8211PHT
DDB 813	2.8186
DDB 816	2.8190
DDB 851	2.8625
DDB 861	2.8169
DDB 863	2.8181
DDB 864	2.8159
DDB 882	2.8204PHT
DDB 883	2.8193
DDB 886	2.8201PHT
DDB 888	2.8198PHT
DDB 889	2.8198PHT
DDB 891	2.8201PHT
DDB 894	2.8198PHT
DDB 895	2.8198PHT
DDB 897	2.8209PHT
DDB 900	2.7677PHT
DDB 901	2.7686PHT
DDB 954	2.8342
DDB 955	2.8627PHT
DDJ 100	2.7903
DDJ 106	2.8303/1
DDJ 107	2.7911
DDJ 115	2.7957
DDJ 156	2.7946
DDJ 167	2.7957
DDJ 189	2.8103
DDJ 190	2.8101PHT
DDJ 191	2.8102
DDJ 201	2.8303/1
DDJ 206	2.8322/37
DDJ 220	2.8303/1
DDJ 224	2.7617
DDJ 235	2.8322/14
DDJ 258	2.8322/31
DDJ 261	2.8322/17
DDJ 300	2.8303/1
DDJ 301	2.7630/22
DDJ 302	2.7630/26
DDJ 303	2.7630/29
DDJ 305	2.7940
DDJ 306	2.7941
DDJ 307	2.8322/16
DDJ 308	2.8322/21
DDJ 309	2.8322/25
DDJ 310	2.8322/32
DDJ 311	2.8322/55
DDJ 404	2.7593
DDJ 407	2.7594
DDJ 411	2.7592
DDJ 420	2.7599
DDJ 427	2.7602
DDJ 428	2.7607
DDJ 440	2.7613
DDJ 442	2.7922
DDJ 446	2.7630/32
DDJ 447	2.7614
DDJ 450	2.7630/10
DDJ 451	2.7619
DDJ 463	2.7607
DDJ 464	2.7622
DDJ 491	2.7969
DLB 101	9.6001D
DLB 105	9.6001D
DLB 125	9.6069
DLB 204	9.6007
DLB 205	9.6005
DLB 206	9.6006
DLB 232	9.6080
DLB 233	9.6055
DLB 246	9.6027
DLB 301	9.6128
DLB 303	9.6001D
DLB 305	9.6241
DLB 310	9.6092
DLB 312	9.8003
DLB 313	9.6026
DLB 314	9.6046
DLB 401	9.6027
DLB 403	9.6025
DLB 701	9.6011
DLB 702	9.6009
DLB 703	9.6241
DLB 704	9.6040
DLB 705	9.6113
DLB 706	9.6048
DLB 708	9.6059
DLB 800	9.6008
DLB 801	9.6002
DLB 802	9.6003
DLJ 402	9.6133
DMB 200	9.6088
DMB 201	9.6089
DMB 300	9.6068
DMB 400	9.6062S
DMB 751	9.6035
DMB 800	9.6172
DPB 801	8.4961/1
DPB 808	8.4980M
DPB 812	8.4976M
DPB 813	8.4977/1
DRB 100	3.8130
DRB 101	3.8106
DRB 104	3.8112
DRB 106	3.8107
DRB 113	3.8114
DRB 117	3.8128RS
DRB 121	3.8127RS
DRB 126	3.8107
DRB 128	3.8107
DRB 131	3.8129RS
DRB 139	3.8121
DRB 147	3.8125
DRB 148	3.8126RS
DRB 149	3.8124RS
DRB 151	3.8129RS
DRB 195	3.8122
DRB 204	3.7683RS
DRB 205	3.7691
DRB 205E	3.7691
DRB 205R	3.7691
DRB 208	3.7689RS
DRB 208E	3.7689RS
DRB 221	3.7691
DRB 222	3.7681
DRB 229	3.7691
DRB 233	3.7688
DRB 233R	3.7688RS
DRB 234	3.7694
DRB 234R	3.7694
DRB 238	3.7696RS
DRB 239	3.7697
DRB 240	3.7691
DRB 243	3.7697
DRB 244	3.7699RS
DRB 246	3.7701
DRB 247	3.7704
DRB 301	3.7995
DRB 431	3.7514RS
DRB 431N	3.7514RS
DRB 432	3.7512RS
DRB 432N	3.7512RS
DRB 433	3.7521RS
DRB 435	3.7518RS
DRB 436	3.7521RS
DRB 439	3.7524RS
DRB 441	3.7525RS
DRB 445	3.7567RS
DRB 446	3.7527RS
DRB 447	3.7526RS
DRB 453	3.7523RS
DRB 455	3.7534RS
DRB 462	3.7556RS
DRB 464	3.7555RS
DRB 466	3.7560RS
DRB 467	3.7573/16RS
DRB 468	3.7559RS
DRB 469	3.7561RS
DRB 470	3.7573/12RS
DRB 472	3.7534RS
DRB 473	3.7555RS
DRB 475	3.7561RS
DRB 476	3.7573/12RS
DRB 480	3.7567RS
DRB 484	3.7573/17RS
DRB 485	3.7573/15RS
DRB 488	3.7567RS
DRB 491	3.7524RS
DRB 493	3.7573/17RS
DRB 494	3.7573/12RS
DRB 498	3.7573/13RS
DRB 499	3.7573/14RS
DRB 500	3.7573/15RS
DRB 501	3.7573/16RS
DRB 504	3.7545RS
DRB 505	3.7567RS
DRB 506	3.7573/17RS
DRB 507	3.7573/18RS
DRB 508	3.7573/19RS
DRB 510	3.7573/21RS
DRB 511	3.7573/22RS
DRB 512	3.7573/23RS
DRB 514	3.7573/26RS
DRB 515	3.7573/25RS
DRB 518	3.7573/27RS
DRB 519	3.7570RS
DRB 520	3.7573/40RS
DRB 625	3.7752
DRB 626	3.7752RS
DRB 627	3.8229
DRB 628	3.8236RS
DRB 631	3.7758
DRB 633	3.8241
DRB 701	3.7593
DRB 701R	3.7593RS
DRB 703	3.7590
DRB 704	3.7596
DRB 705	3.7595RS
DRB 706	3.7597
DRB 707	3.7600
DRB 750	3.7885
DRB 752	3.7885
DRB 757	3.7894RS
DRB 811	3.8237RS
DRB 812	3.8242RS
DRB 815	3.8237RS
DRB 817	3.8242RS
DRB 853	3.8714RS
DRB 862	3.8229
DRB 863	3.8236RS
DRB 864	3.8236RS
DRB 864R	3.8236RS
DRB 868	3.8241
DRB 869	3.8240
DRB 871	3.8242RS
DRB 871E	3.8242RS
DRB 871R	3.8242RS
DRB 872	3.8237
DRB 886	3.8247RS
DRB 889	3.8251RS
DRB 890	3.8254RS
DRB 891	3.8255RS

DRB 892	***3.8260***
DRB 893	***3.8257RS***
DRB 895	***3.8259***
DRB 900	***3.7702RS***
DRB 954	***3.8362RS***
DRB 957	***3.8714RS***
DRB 958	***3.8716RS***
DRJ 102	***3.7952***
DRJ 104	***3.7992***
DRJ 107	***3.7956***
DRJ 119	***3.7966***
DRJ 125	***3.7970***
DRJ 131	***3.7969***
DRJ 153	***3.7970***
DRJ 154	***3.7985***
DRJ 201	***3.8331/33***
DRJ 202	***3.8323***
DRJ 202R	***3.8323***
DRJ 206	***3.8331/37***
DRJ 220	***3.8323***
DRJ 224	***3.8331/7***
DRJ 245	***3.8331/8***
DRJ 300	***3.8331/31***
DRJ 401	***3.7614***
DRJ 409	***3.7627***
DRJ 419	***3.7614***
DRJ 425	***3.7627***
DRJ 438	***3.7629***
DRJ 447	***3.7982***
DSB 101	***1.4683MHDV***
DSB 109	***1.4683MHDV***
DSB 191	***1.4689***
DSB 201	***1.2534HDVS***
DSB 204	***1.3686***
DSB 210	***1.3691/5***
DSB 210E	***1.3691/5***
DSB 213	***1.3691/11U***
DSB 215	***1.3664***
DSB 220	***1.3676***
DSB 230	***1.3691/3***
DSB 230E	***1.3691/3***
DSB 232	***1.3691/6***
DSB 232E	***1.3691/6***
DSB 241	***1.3655***
DSB 242	***1.3661***
DSB 242V	***1.3661***
DSB 244	***1.3667***
DSB 245	***1.3656***
DSB 246	***1.6854***
DSB 250	***1.3667***
DSB 252	***1.3691/1***
DSB 252E	***1.3691/1***
DSB 255	***1.3691/11U***
DSB 256	***1.3691/12U***
DSB 266	***1.3655***
DSB 275	***1.3691/22***
DSB 276	***1.2549HDVS***
DSB 279	***1.3691/26*** *FP
DSB 280	***1.3691/27*** *FP
DSB 283	***1.3656***
DSB 431	***1.2532HDV***
DSB 431V	***1.2532HDV***
DSB 432	***1.2534HDVS***
DSB 432C	***1.2534HDVS***
DSB 432S	***1.2534HDVS***
DSB 432V	***1.2534HDVS***
DSB 433	***1.2521***
DSB 435	***1.2547***
DSB 436	***1.2549HDVS***
DSB 436S	***1.2549HDVS***
DSB 436V	***1.2549HDVS***
DSB 437	***1.2540***
DSB 438	***1.2529HDV***
DSB 438V	***1.2529HDV***
DSB 439	***1.2529HDV***
DSB 440	***1.2529HDV***
DSB 443	***1.2534HDVS***
DSB 443C	***1.2534HDVS***
DSB 443S	***1.2534HDVS***
DSB 443V	***1.2534HDVS***
DSB 445	***1.2549HDVS***
DSB 445V	***1.2549HDVS***
DSB 446	***1.2534HDVS***
DSB 446S	***1.2534HDVS***
DSB 447	***1.2562***
DSB 448	***1.2540***
DSB 625	***1.4932***
DSB 625V	***1.4932***
DSB 626	***1.4940***
DSB 626V	***1.4940***
DSB 627	***1.3664***
DSB 628	***1.4939***
DSB 628V	***1.4939***
DSB 629	***1.4920***
DSB 629V	***1.4920***
DSB 631	***1.3664***
DSB 633	***1.3724***
DSB 636	***1.4927***
DSB 636V	***1.4927***
DSB 637	***1.3726***
DSB 700	***1.3455HDVS***
DSB 700S	***1.3455HDVS***
DSB 700V	***1.3455HDVS***
DSB 752	***1.4144HDV***
DSB 753	***1.4143HDV***
DSB 800	***1.4940***
DSB 801	***1.7271***
DSB 801V	***1.7271***
DSB 853	***1.7270***
DSB 853V	***1.7270***
DSB 861	***1.4932***
DSB 861V	***1.4932***
DSB 862	***1.4920***
DSB 862V	***1.4920***
DSB 863	***1.4940***
DSB 863V	***1.4940***
DSB 865	***1.4939***
DSB 865V	***1.4939***
DSB 868	***1.4942***
DSB 868V	***1.4942***
DSB 869	***1.4927***
DSB 869V	***1.4927***
DSB 880M	***1.4946M***
DSB 883M	***1.4948M***
DSB 884	***1.4949***
DSB 884M	***1.4949M***
DSB 886	***1.4948M***
DSB 887	***1.4949M***
DSB 951	***1.5945***
DSB 956	***1.2805/1***
DSJ 100	***1.4456HDV***
DSJ 100V	***1.4456HDV***
DSJ 204	***1.5084***
DSJ 205	***1.5084***
DSJ 402	***1.3511HDV***
DSJ 403	***1.3511HDV***
DSJ 405V	***1.3522HDV***
DTB 415	***1.2534HDVS***
DTB 419	***1.2534HDVS***
DTB 422	***1.2540***
DTB 812	***1.4940***
DTJ 452	***1.3511HDV***
DTJ 453	***1.3511HDV***
DUB 105	***2.8091PHT***
DUB 105	***3.8122***
DUB 107	***2.8075***
DUB 107	***3.8106***
DUB 111	***2.8098PHT***
DUB 111	***3.8127RS***
DUB 114	***2.8085PHT***
DUB 114	***3.8112***
DUB 115	***2.8091PHT***
DUB 115	***3.8121***
DUB 116	***2.8091PHT***
DUB 116	***3.8121***
DUB 226	***2.7654PHT***
DUB 226	***3.7688***
DUB 227	***2.7654PHT***
DUB 430	***2.7481PHT***
DUB 443	***3.7526RS***
DUB 455	***2.7530/28PHT***
DUB 455	***3.7573/13RS***
DUB 753	***2.7793PHT***
DVB 865	***1.4939***
E 456	***1.3726***
E 833	***2.7716***
E 928	***3.8229***
F 420	***1.4143HDV***
F 421	***1.4144HDV***
F4036	***2.7783***
F4521	***3.7885***
J 436	***1.3511HDV***
J 438	***1.4456HDV***
J 454	***1.3522HDV***
J 830	***2.7593***
J 836	***2.8322/9***
J 876	***2.7922***
J 927	***3.7614***
J 970	***3.7614***
L 431	***1.4683MHDV***
L 453	***1.4689***
L 837	***2.8096PHT***
L 880	***3.8125***
L 887	***2.8094PHT***
L 935	***3.8126RS***
L4035	***2.8078***
L4520	***3.8112***
M 20	***0.0617***
M 32	***0.0397***
M 34	***0.0627***
M 408	***1.4946M***
M 410	***1.4949M***
M 416	***1.4932***
M 417	***1.4940***
M 418	***1.4939***
M 419	***1.4920***
M 432	***1.4942***
M 450	***1.3724***
M 459	***1.4949***
M 758	***0.0628***
M 840	***2.8209PHT***
M 881	***2.8625***
M 885	***3.8259***
M 893	***2.8211PHT***
M 930	***3.8241***
M 931	***3.8251RS***
M 932	***3.8254RS***
M 933	***3.8260***
M 934	***3.7560RS***
M4029	***2.8169***
M4043	***2.8190***
M4045	***2.8204PHT***
M4047	***2.7723PHT***
M4048	***2.8198PHT***
M4518	***3.8237***
M4530	***3.8242RS***
M4533	***3.8247RS***
M4535	***3.7758***
M4536	***3.8255RS***
MTR-01	***9.4005***
RA 13	***3.8114***
RA 29	***3.7691***
RA 200	***3.7514RS***
S 406	***1.6854***
S4010	***2.8543***
U 592	***1.5945***
0 009 3079 13	***1.3455HDVS***
0 221 102 088	***9.6032***
0 221 102 090	***9.6001D***
0 221 102 091	***9.6001D***
0 221 118 307	***9.6080***
0 221 118 329	***9.6078***
0 221 118 398	***9.6026***
0 221 119 008	***9.6001D***
0 221 119 018	***9.6001D***
0 221 119 025	***9.6001D***
0 221 119 027	***9.6001D***
0 221 119 035	***9.6001D***
0 221 119 048	***9.6001D***
0 221 122 008	***9.6069***
0 221 122 012	***9.6003***
0 221 122 022	***9.6032***
0 221 122 023	***9.6032***
0 221 122 031	***9.6069***
0 221 122 334	***9.6026***
0 221 122 349	***9.6025***
0 221 122 350	***9.6025***
0 221 122 357	***9.6026***
0 221 122 358	***9.6026***
0 221 122 369	***9.6094***
0 221 122 379	***9.6027***
0 221 122 380	***9.6027***
0 221 122 386	***9.6025***
0 221 122 399	***9.6026***
0 221 122 400	***9.6026***
0 221 122 402	***9.6091***
0 221 122 403	***9.6091***
0 221 122 408	***9.6092***
0 221 122 409	***9.6092***
0 221 123 007	***9.6001D***
0 221 502 009	***9.6012***
0 221 502 431	***9.6078***
0 221 502 433	***9.6079***
0 221 503 001	***9.6173***
0 221 503 003	***9.6089***
0 221 503 004	***9.6088***
0 221 503 006	***9.6089***
0 221 503 011	***9.6289***
0 221 503 014	***9.6298***
0 221 503 022	***9.6314***
0 221 503 024	***9.6089***
0 221 503 025	***9.6088***
0 221 503 035	***9.6317***
0 221 503 036	***9.6317***
0 221 503 407	***9.6068***
0 221 503 457	***9.6068***
0 221 503 468	***9.6407***
0 221 503 471	***9.6298***
0 221 503 485	***9.6381***
0 221 503 486	***9.6381***
0 221 503 487	***9.6381***
0 221 503 491	***9.6432***
0 221 503 700	***9.6172***
0 221 503 800	***9.6447***
0 221 504 004	***9.6252***
0 221 504 006	***9.6214***
0 221 504 026	***9.6449***
0 221 504 029	***9.6252***
0 221 504 036	***9.6449***
0 221 504 100	***9.6375***
0 221 504 410	***9.6312***
0 221 504 456	***9.6213***
0 221 504 463	***9.6375***
0 221 504 467	***9.6375***
0 221 504 471	***9.6507***
0 221 504 472	***9.6507***
0 221 504 474	***9.6312***
0 221 504 801	***9.6507***
0 221 505 437	***9.6217***
0 221 505 438	***9.6217***
0 221 506 002	***9.6216***
0 221 506 003	***9.6216***
0 221 506 444	***9.6216***
0 221 506 445	***9.6216***
0 221 601 012	***9.8123***
0 221 604 001	***9.6348***
0 221 604 008	***9.6348***
0 221 604 010	***9.6378***
0 221 604 014	***9.6389***
0 221 604 115	***9.6326***
0 221 604 116	***9.6326***
0 221 604 701	***9.6526***
0 227 100 030	***9.4076***
0 227 100 100	***9.4004***
0 227 100 101	***9.4004***
0 227 100 102	***9.4005***

0 227 100 103	9.4004
0 227 100 104	9.4004
0 227 100 110	9.4005
0 227 100 111	9.4005
0 227 100 112	9.4005
0 227 100 113	9.4004
0 227 100 118	9.4004
0 227 100 123	9.4005
0 227 100 124	9.4034
0 227 100 137	9.4004
0 227 100 138	9.4004
0 227 100 139	9.4004
0 227 100 142	9.4007
0 227 100 143	9.4007
0 227 100 147	9.4007
0 227 100 211	9.4076
0 227 100 212	9.4076
0 237 001 002	8.2653*N
0 237 001 005	8.2653*N
0 237 001 006	8.2653*N
0 237 001 007	8.2653*N
0 237 001 008	8.2653*N
0 237 002 001	8.2653*N
0 237 002 003	8.2653*N
0 237 002 004	8.2653*N
0 237 002 005	8.2653*N
0 237 002 006	8.2653*N
0 237 002 008	8.2653*N
0 237 002 010	8.2653*N
0 237 002 011	8.2653*N
0 237 002 012	8.2653*N
0 237 002 013	8.2653*N
0 237 002 015	8.2653*N
0 237 002 017	8.2653*N
0 237 002 018	8.2653*N
0 237 002 020	8.2653*N
0 237 002 021	8.2653*N
0 237 002 022	8.2653*N
0 237 002 035	8.2653*N
0 237 002 038	8.2653*N
0 237 002 039	8.2653*N
0 237 002 050	8.2653*N
0 237 002 053	8.2653*N
0 237 002 054	8.2653*N
0 237 002 057	8.2653*N
0 237 002 065	8.2653*N
0 237 002 069	8.2653*N
0 237 002 071	8.2653*N
0 237 002 072	8.2653*N
0 237 002 073	8.2653*N
0 237 002 075	8.2653*N
0 237 002 076	8.2653*N
0 237 002 078	8.2653*N
0 237 002 087	8.2653*N
0 237 002 088	8.2653*N
0 237 002 089	8.2653*N
0 237 002 109	8.2653*N
0 237 002 113	8.2653*N
0 237 002 114	8.2653*N
0 237 002 115	8.2653*N
0 237 002 128	8.2653*N
0 237 002 129	8.2653*N
0 237 002 133	8.2653*N
0 237 003 001	8.2653*N
0 237 003 003	8.2653*N
0 237 003 007	8.2653*N
0 237 003 008	8.2653*N
0 237 003 009	8.2653*N
0 237 003 018	8.2653*N
0 237 003 024	8.2653*N
0 237 003 027	8.2653*N
0 237 003 034	8.2653*N
0 237 003 035	8.2653*N
0 237 003 036	8.2653*N
0 237 003 040	8.2653*N
0 237 003 041	8.2653*N
0 237 003 042	8.2653*N
0 237 004 001	8.2653*N
0 237 004 002	8.2653*N
0 237 004 005	8.2653*N
0 237 005 002	8.2653*N
0 237 005 004	8.2653*N
0 237 006 001	8.2653*N
0 237 006 003	8.2653*N
0 237 006 005	8.2653*N
0 237 006 006	8.2653*N
0 237 006 009	8.2653*N
0 237 006 010	8.2653*N
0 237 008 001	8.2653*N
0 237 008 002	8.2653*N
0 237 009 003	8.2653*N
0 237 009 010	8.2653*N
0 237 009 033	8.2653*N
0 237 011 003	8.2653*N
0 237 012 001	8.2653*N
0 237 012 002	8.2653*N
0 237 020 081	8.2659*N
0 237 020 083	8.2659*N
0 237 020 084	8.2659*N
0 237 020 085	8.2659*N
0 237 020 086	8.2659*N
0 237 020 087	8.2659*N
0 237 020 088	8.2659*N
0 237 020 089	8.2659*N
0 237 020 090	8.2659*N
0 237 020 091	8.2659*N
0 237 020 095	8.2659*N
0 237 020 096	8.2659*N
0 237 020 097	8.2659*N
0 237 020 098	8.2659*N
0 237 020 099	8.2659*N
0 237 020 100	8.2659*N
0 237 020 103	8.2659*N
0 237 020 105	8.2659*N
0 237 020 109	8.2659*N
0 237 020 110	8.2659*N
0 237 020 111	8.2659*N
0 237 020 112	8.2659*N
0 237 020 113	8.2659*N
0 237 020 114	8.2659*N
0 237 020 115	8.2659*N
0 237 020 116	8.2659*N
0 237 020 117	8.2659*N
0 237 020 118	8.2659*N
0 237 020 119	8.2659*N
0 237 020 120	8.2659*N
0 237 020 131	8.2659*N
0 237 020 133	8.2659*N
0 237 020 134	8.2659*N
0 237 020 135	8.2659*N
0 237 020 136	8.2659*N
0 237 020 137	8.2659*N
0 237 020 138	8.2659*N
0 237 020 140	8.2659*N
0 237 020 141	8.2659*N
0 237 020 144	8.2659*N
0 237 020 145	8.2659*N
0 237 020 146	8.2659*N
0 237 020 147	8.2659*N
0 237 020 148	8.2659*N
0 237 020 149	8.2659*N
0 237 020 150	8.2659*N
0 237 020 151	8.2659*N
0 237 020 152	8.2659*N
0 237 020 153	8.2659*N
0 237 020 154	8.2659*N
0 237 020 155	8.2659*N
0 237 020 156	8.2659*N
0 237 020 157	8.2659*N
0 237 020 158	8.2659*N
0 237 020 159	8.2659*N
0 237 020 160	8.2659*N
0 237 020 161	8.2659*N
0 237 020 162	8.2659*N
0 237 020 163	8.2659*N
0 237 020 164	8.2659*N
0 237 020 165	8.2659*N
0 237 020 166	8.2659*N
0 237 020 167	8.2659*N
0 237 020 169	8.2659*N
0 237 020 170	8.2659*N
0 237 020 171	8.2659*N
0 237 020 172	8.2659*N
0 237 020 175	8.2659*N
0 237 020 176	8.2659*N
0 237 020 177	8.2659*N
0 237 020 178	8.2659*N
0 237 020 180	8.2659*N
0 237 020 182	8.2659*N
0 237 020 183	8.2659*N
0 237 020 184	8.2659*N
0 237 020 185	8.2659*N
0 237 020 186	8.2659*N
0 237 020 187	8.2659*N
0 237 020 188	8.2659*N
0 237 020 189	8.2659*N
0 237 020 190	8.2659*N
0 237 020 191	8.2659*N
0 237 020 192	8.2659*N
0 237 020 193	8.2659*N
0 237 020 194	8.2659*N
0 237 020 195	8.2659*N
0 237 020 196	8.2659*N
0 237 020 197	8.2659*N
0 237 020 198	8.2659*N
0 237 020 199	8.2659*N
0 237 020 200	8.2659*N
0 237 020 201	8.2659*N
0 237 020 202	8.2659*N
0 237 020 203	8.2659*N
0 237 020 204	8.2659*N
0 237 020 205	8.2659*N
0 237 020 212	8.2659*N
0 237 020 213	8.2659*N
0 237 021 026	8.2693*N
0 237 021 027	8.2693*N
0 237 021 028	8.2693*N
0 237 021 034	8.2693*N
0 237 021 035	8.2693*N
0 237 021 036	8.2693*N
0 237 021 040	8.2693*N
0 237 021 041	8.2693*N
0 237 021 042	8.2693*N
0 237 021 043	8.2693*N
0 237 021 044	8.2693*N
0 237 021 045	8.2693*N
0 237 021 046	8.2693*N
0 237 021 047	8.2693*N
0 237 021 048	8.2693*N
0 237 021 051	8.2693*N
0 237 021 052	8.2693*N
0 237 021 054	8.2693*N
0 237 021 056	8.2693*N
0 237 021 074	8.2734*N
0 237 022 035	8.2659*N
0 237 022 036	8.2659*N
0 237 022 037	8.2659*N
0 237 022 038	8.2659*N
0 237 022 039	8.2659*N
0 237 022 041	8.2659*N
0 237 022 043	8.2659*N
0 237 022 047	8.2659*N
0 237 022 049	8.2659*N
0 237 022 058	8.2659*N
0 237 022 060	8.2659*N
0 237 024 007	8.2659*N
0 237 024 008	8.2659*N
0 237 024 009	8.2659*N
0 237 024 010	8.2659*N
0 237 024 016	8.2659*N
0 237 024 017	8.2659*N
0 237 024 018	8.2659*N
0 237 024 019	8.2659*N
0 237 024 022	8.2659*N
0 237 024 023	8.2659*N
0 237 024 024	8.2659*N
0 237 024 025	8.2659*N
0 237 024 027	8.2659*N
0 237 024 028	8.2659*N
0 237 024 029	8.2659*N
0 237 024 030	8.2659*N
0 237 024 031	8.2659*N
0 237 024 032	8.2659*N
0 237 024 033	8.2659*N
0 237 024 034	8.2659*N
0 237 024 037	8.2659*N
0 237 024 038	8.2659*N
0 237 026 013	8.2693*N
0 237 026 014	8.2693*N
0 237 035 001	8.2659*N
0 237 037 001	8.2693*N
0 237 037 002	8.2693*N
0 237 037 003	8.2693*N
0 237 037 004	8.2693*N
0 237 037 005	8.2693*N
0 237 037 007	8.2693*N
0 237 037 008	8.2693*N
0 237 037 009	8.2693*N
0 237 037 010	8.2693*N
0 237 505 005	8.2653*N
0 237 505 009	8.2653*N
0 237 520 001	8.2733*N
0 237 520 036	8.2723*N
0 237 520 037	8.2723*N
0 237 520 048	8.2723*N
0 237 520 054	8.2744*N
0 237 521 003	8.2733*N
0 237 521 006	8.2723*N
0 237 521 019	8.2733*N
0 237 521 020	8.2733*N
0 237 521 024	2.7530/26PHT*B
0 237 521 024	3.7573/21RS
0 237 521 024	8.2744
0 237 521 046	8.2733*N
0 237 521 047	8.2733*N
0 237 521 048	8.2723*N
0 237 521 050	8.2723*N
0 237 521 058	8.2723*N
0 237 522 011	8.2723*N
0 290 004 019	2.7530/36PHT
0 290 004 032	2.7530/1PHT*A
0 290 004 035	2.7530/1PHT*A
0 290 004 500	2.7490PHT*A
0 290 004 501	2.7492PHT*A
0 290 004 502	2.7490PHT*A
0 290 004 503	2.7492PHT
0 290 004 505	2.7490PHT
0 310 396	9.4004
0 310 397	9.4005
0 310 411	9.4007
0 347 0056	3.7593
0 347 9003	2.7566PHT
0 348 6037	3.7595RS
0 356 100 107	4.9607
0 356 100 107	4.9608
0 356 901 808	4.8572
0 356 901 814	4.8578
0 356 901 819	4.8597
0 356 912 052	4.9649
0 356 912 054	4.9649
0 356 912 948	4.9649
0 356 912 950	4.9649
0 356 912 975	4.9643
0 356 913 006	4.7232
0 356 913 008	4.7232
0 356 913 013	4.7234
0 356 913 017	4.7234
0 356 913 019	4.7234
0 356 913 021	4.7232
0 356 913 023	4.7232
0 986 221 003	9.6245
0 986 221 011	9.6254S
0 986 221 025	9.6276
0 986 221 026	9.6278
0 986 221 027	9.6008
0 986 221 029	9.6055

0 986 221 030	***9.6255***
0 986 221 031	***9.6256***
0 986 221 033	***9.6096***
0 986 221 034	***9.6303***
0 986 221 103	***9.6538***
0 986 221 114	***9.6456***
0 986 221 146	***9.6547***
0 986 22A 000	***9.6457***
0 986 22A 201	***9.6320***
0 986 22A 203	***9.6254S***
0 986 22A 204	***9.6342***
0 986 22A 205	***9.6383***
0 986 22A 206	***9.6308***
0 986 22A 207	***9.6470***
0 986 22A 209	***9.6350***
0 986 22A 216	***9.6519***
0 986 22A 218	***9.6508***
0 986 22A 222	***9.6433***
0 986 22A 402	***9.6274***
0 986 356 345	***4.7223***
0 986 356 717	***4.8615***
0 986 356 835	***4.8716***
0 986 356 928	***4.9209***
0 986 357 226	***4.9531***
0 986 357 252	***4.9446***
0 986 357 261	***4.9503***
0 986 357 277	***4.9732***
0 986 AG0 506	***9.6366***
0.71374201.010	***2.8216PHT***
0.71377402.010	***3.8257RS***
005.300	***1.1806***
01.522	***4.8623***
01.526	***4.8660***
01.527	***4.8623***
01.529	***4.8716***
01.534	***4.8623***
01.538	***4.9608***
01.538C	***4.9608***
01.543	***4.9607***
01.543C	***4.9607***
014 885 0000	***9.6317***
014 885 0005	***9.6387***
014 885 0015	***9.6405***
014 885 0017	***9.6403***
014 885 0018	***9.6526***
02.506	***4.8768***
02.520	***4.9491***
02.520C	***4.9491***
029 120-135	***2.7599***
029 120-139	***2.7614***
029 120-152	***2.7619***
029 120-167	***2.7599***
029 120-224	***2.7630/48***
029 120-227	***2.7619***
029 120-234	***2.7630/48***
029 120-253	***2.7630/27***
029 120-255	***2.7599***
029 120-256	***2.7599***
029 120-263	***2.7630/21***
029 120-265	***2.7630/18***
029 120-273	***2.7630/48***
029 120-282	***2.7630/22***
029 120-321	***2.7630/35***
029 120-333	***2.7630/45***
029 120-340	***2.7630/37***
029 120-357	***2.7630/42***
029 120-366	***2.7630/43***
029120-0600	***2.7593***
029120-0601	***2.7593***
029120-0741	***2.7592***
029120-0760	***2.7594***
029120-1020	***2.7599***
029120-1080	***2.7602***
029120-1290	***2.7613***
029120-1390	***2.7614***
029120-1410	***2.7630/32***
029120-1480	***2.7617***
029120-1510	***2.7622***
029120-1520	***2.7619***
029120-1540	***2.7607***
029120-1600	***2.7630/10***
029120-1700	***2.7630/11***
029120-1720	***2.7628***
029120-1850	***2.7623***
029120-2120	***2.7630/48***
029120-2130	***2.7630/32***
029120-2291	***2.7630/15***
029120-2311	***2.7593***
029120-2590	***2.7623***
029120-2610	***2.7630/28***
029180-0240	***3.7614***
029180-0241	***3.7614***
029180-0340	***3.7614***
029180-0430	***3.7614***
029180-0580	***3.7614***
029180-0660	***3.7627***
029180-0910	***3.7629***
029180-0920	***3.7628***
029180-0921	***3.7628***
029180-0930	***3.7629***
029180-0990	***3.7630***
029180-1130	***3.7630***
029180-1230	***3.7629***
029180-1260	***3.7630***
029180-1280	***3.7634***
029180-1300	***3.7634***
029180-1310	***3.7628***
029180-1391	***3.7628***
029350-0200	***1.3511HDV***
029350-0270	***1.3511HDV***
029350-0550	***1.3522HDV***
029350-0650	***1.3511HDV***
029350-0660	***1.3522HDV***
029350-0690	***1.3511HDV***
029350-0740	***1.3522HDV***
029350-0820	***1.3522HDV***
029350-0860	***1.3511HDV***
029700-5430	***9.6097***
029700-6700	***9.6035***
029700-6760	***9.6070***
029700-6770	***9.6189***
029700-6780	***9.6189***
029700-6820	***9.6102***
029700-7050	***9.6103***
029700-7051	***9.6103***[*U]
029700-7180	***9.6070***
029700-7301	***9.6222***
029700-7531	***9.6189***
029700-7700	***9.6185S***
029700-7910	***9.6070***
029700-8240	***9.6332***
029700-8291	***9.6332***
03.506	***4.8694***
0347	***4.9883***
0350	***4.9732***
0355	***4.9413***
04.500	***4.8572***
04.506	***4.8572***
04.527	***4.8572***
05.513	***4.9374***
05.515	***4.8674***
05.516	***4.8780***
05.518	***4.8494***
05.524	***4.8748***
05.528	***4.8494***
056181168010	***0.0617***
056181176010	***0.0617***
056181182010	***0.0627***
056181183010	***0.0628***
056181202010	***0.0617***
06.500	***4.8386***
06.5100	***4.9451***
06.533	***4.8429***
06.543	***4.8466***
06.544	***4.8347***
06.546	***4.8432***
06.547	***4.8347***
06.548	***4.8354***
06.549	***4.8386***
06.551	***4.8398***
06.552	***4.8398***
06.557	***4.8466***
06.558	***4.8386***
06.560	***4.8351***
06.561	***4.8347***
06.562	***4.8354***
06.563	***4.8815***
06.565	***4.8815***
06.568	***4.8615***
06.569	***4.8808***
06.570	***4.8887***
06.572	***4.8616***
06.573	***4.8650***
06.574	***4.8456***
06.576	***4.8613***
06.577	***4.8655***
06.578	***4.8616***
06.579	***4.9363***
06.580	***4.9503***
06.584	***4.8808***
06.585	***4.8808***
06.587	***4.8655***
06.588	***4.8889***
06.591	***4.9504***
06.592	***4.8398***
06.594	***4.8887***
06.598	***4.9505***
0601-9106-5	***2.8322/39***
060690003010	***9.6001D***
060705404010	***9.6002***
060705404010	***9.6048***
060705409010	***9.6128***
060705604010	***9.6008***
060705606010	***9.6058***
060705738010	***9.6006***
060705754010	***9.6055***
060708038010	***9.6046***
060708049010	***9.6096***
060708149010	***9.6096***
060717006012	***9.6169***
060717008012	***9.8114***
060717009012	***9.6055***
060717011012	***9.6040***
060717014012	***9.6005***
060717015012	***9.6006***
060717017012	***9.6008***
060717020012	***9.6128***
060717021012	***9.6247***
060717022012	***9.6114***
060717023012	***9.6115***
060717024012	***9.6113***
060717026012	***9.6133***
060717029012	***9.6046***
060717030012	***9.6305***
060717031012	***9.6303***
060717037012	***9.6068***
060717042012	***9.8120***
060717043012	***9.6088***
060717044012	***9.6172***
060717048012	***9.6070***
060717051012	***9.6096***
060717052012	***9.6299***
060717053012	***9.6329***
060717055012	***9.6319***
060717060012	***9.6496***
060717064012	***9.6408***
060717067012	***9.6245***
060717068012	***9.6276***
060717069012	***9.6278***
060717070012	***9.6175***
060717071012	***9.6256***
060717072012	***9.6265***
060717073012	***9.6255***
060717078012	***9.6359***
060717082012	***9.6307***
060717086012	***9.6358***
060717093012	***9.6491***
060717101012	***9.6418***
060717104012	***9.6308***
060717105012	***9.6380***
060717106012	***9.6119***
060717111012	***9.6395***
060717113012	***9.6507***
060717119012	***9.6366***
060717123012	***9.6103***
060717126012	***9.6361***
060717130012	***9.6331***
060717131012	***9.6274***
060717135012	***9.6323***
060717137012	***9.6447***
060717144012	***9.6387***
060717146012	***9.6381***
060717148012	***9.6392***
060717149012	***9.6456***
060717150012	***9.6422***
060717151012	***9.6436***
060717156012	***9.6350***
060717157012	***9.6383***
060717158012	***9.6345***
060717160012	***9.6335***
060717163012	***9.6317***
060717164012	***9.6502***
060717167012	***9.6336***
060717168012	***9.6486***
060717169012	***9.6333***
060717173012	***9.6519***
060717175012	***9.6327***
060717176012	***9.6416***
060717183012	***9.6320***
060717185012	***9.6407***
060717187012	***9.6512***
060717188012	***9.6509***
060717190012	***9.6418***
060717193012	***9.6511***
060717199012	***9.6499***
060717202012	***9.6342***
060717203012	***9.6452***
060717206012	***9.6445***
060717206012	***9.6445***
060717207012	***9.6376***
060717243012	***9.6514***
060717244012	***9.6489***
060717247012	***9.6429***
060717250012	***9.6451***
060717251012	***9.6405***
060717256012	***9.6437***
060740303010	***9.6342***
060780002010	***9.6046***
060792001010	***9.6245***
060794001010	***9.6323***
060801005010	***9.6432***
060801006010	***9.6212***
060801012010	***9.6350***
060810070010	***9.6332***
060810090010	***9.6284***
060810160010	***9.6502***
060810167010	***9.6331***
060810176010	***9.6375***
060810187010	***9.6389***
060810196010	***9.6326***
060810210010	***9.6375***
060810212010	***9.6375***
060810224010	***9.6449***
060810229010	***9.6429***
060810245010	***9.6214***
060810269010	***9.6380***
060810270010	***9.6381***
061110041010	***8.4976M***
061110055010	***8.4976M***
061110062010	***8.4976M***
061110103010	***8.4980M***
061110126010	***8.4980M***
064825072010	***9.8003***
064833040010	***9.4020***
0675	***4.8351***
0689	***4.8432***

07.508	4.8398	1 217 013 001	1.2560	1 234 332 301	3.7555RS	1 234 335 305	3.7559RS
07.509	4.8398	1 217 013 002	1.2560	1 234 332 303	3.7567RS	1 234 335 801	3.7593RS
07.513	4.8808	1 217 013 003	1.2560	1 234 332 305	3.7559RS	1 234 335 802	3.7691
07.514	4.8692	1 217 013 006	1.2560	1 234 332 309	3.7555RS	1 234 335 805	3.7683RS
07.515	4.8398	1 217 013 009	1.2564	1 234 332 313	3.7573/12RS	1 234 335 845	3.7688RS
07.516	4.8456	1 217 013 015	1.2560	1 234 332 317	3.7573/17RS	1 235 522 040	2.7481PHT
07.518	4.8700	1 217 013 020	1.2583	1 234 332 332	3.7524RS	1 235 522 041	2.7481PHT
07.521	4.8650	1 217 013 021	1.2568	1 234 332 333	3.7570RS	1 235 522 050	2.7476PHT
07.525	4.8456	1 217 013 022	1.2568	1 234 332 337	3.7549RS	1 235 522 051	2.7472PHT
07.528	4.8456	1 217 013 025	1.2583	1 234 332 340	3.7573/14RS	1 235 522 053	2.7481PHT
070005501010	2.8159	1 217 013 103	1.2560	1 234 332 341	3.7573/22RS	1 235 522 056	2.7479PHT
070189501010	3.8229	1 217 031 015	1.2568	1 234 332 343	3.7573/15RS	1 235 522 058	2.7476PHT
071006701010	1.4920	1 220 522 019	9.6092	1 234 332 344	3.7573/12RS	1 235 522 059	2.7476PHT
071093003010	3.8254RS	1 221 122 409	9.6092	1 234 332 346	3.7573/13RS	1 235 522 060	2.7472PHT
071101607010	3.8251RS	1 227 010 003	9.4034	1 234 332 347	3.7573/19RS	1 235 522 074	2.7492PHT
071111601010	1.4939	1 227 010 039	9.4034	1 234 332 348	3.7573/16RS	1 235 522 075	2.7481PHT
071118501010	1.4940	1 227 020 029	9.6091	1 234 332 349	3.7573/18RS	1 235 522 103	2.7472PHT
071119505010	3.8242RS	1 227 022 008	9.4004	1 234 332 350	3.7573/21RS	1 235 522 107	2.7462
071129001010	2.8182	1 227 022 030	9.8114	1 234 332 351	3.7573/12RS	1 235 522 109	2.7472PHT
071142401010	3.8236RS	1 227 030 030	9.8114	1 234 332 353	3.7573/17RS	1 235 522 134	2.7462
071142402010	3.8242RS	1 227 030 051	9.6169	1 234 332 359	3.7555RS	1 235 522 141	2.7476PHT
071153901010	3.8237RS	1 227 030 052	9.6169	1 234 332 360	3.7573/21RS	1 235 522 144	2.7476PHT
071171101010	2.8186	1 227 030 059	9.6286	1 234 332 364	3.7573/22RS	1 235 522 145	2.7476PHT
071171301010	3.8240	1 227 030 062	9.6287	1 234 332 365	3.7573/25RS	1 235 522 146	2.7472PHT
071174301010	2.8190	1 227 030 071	9.6297	1 234 332 366	3.7573/21RS	1 235 522 147	2.7472PHT
071197502010	1.4942	1 230 500 221	8.2660	1 234 332 370	3.7573/23RS	1 235 522 154	2.7472PHT
071237201010	3.8247RS	1 230 591 003	2.7480PHT	1 234 332 371	3.7573/22RS	1 235 522 155	2.7479PHT
071237202010	3.8257RS	1 230 591 040	2.7530/36PHT	1 234 332 374	3.7573/21RS	1 235 522 157	2.7462
071237801010	3.8247RS	1 234 211 018	8.2653	1 234 332 381	3.7573/27RS	1 235 522 158	2.7472PHT
071243702010	2.8198PHT	1 234 211 218	8.2653	1 234 332 382	3.7573/26RS	1 235 522 159	2.7472PHT
071246105010	2.8201PHT	1 234 332 024	3.7518RS	1 234 332 387	3.7573/21RS	1 235 522 167	2.7476PHT
071275301010	3.8255RS	1 234 332 029	3.7518RS	1 234 332 390	3.7573/47RS	1 235 522 169	2.7476PHT
071277902010	1.4946M	1 234 332 030	3.7518RS	1 234 332 393	3.7573/21RS	1 235 522 171	2.7472PHT
071277905010	1.4949M	1 234 332 033	3.7512RS	1 234 332 395	3.7573/40RS	1 235 522 173	2.7476PHT
071293402010	1.4948M	1 234 332 062	3.7518RS	1 234 332 399	3.7573/21RS	1 235 522 175	2.7476PHT
071302701010	2.8209PHT	1 234 332 072	3.7518RS	1 234 332 401	3.7561RS	1 235 522 176	2.7472PHT
071319801010	8.4961/1	1 234 332 074	3.7512RS	1 234 332 402	3.7573/21RS	1 235 522 177	2.7472PHT
071319804010	8.4963/1	1 234 332 076	3.7514RS	1 234 332 408	3.7573/46RS	1 235 522 179	2.7476PHT
071326901010	8.4977/1	1 234 332 082	3.7514RS	1 234 332 414	3.7573/21RS	1 235 522 181	2.7472PHT
071347401010	8.4980M	1 234 332 087	3.7518RS	1 234 332 417	3.7573/25RS	1 235 522 183	2.7479PHT
071349101010	8.4976M	1 234 332 088	3.7518RS	1 234 332 421	3.7573/48RS	1 235 522 185	2.7479PHT
071351702010	3.8259	1 234 332 089	3.7514RS	1 234 332 422	3.7573/46RS	1 235 522 188	2.7479PHT
071358401010	2.8211PHT	1 234 332 106	3.7521RS	1 234 332 426	3.7573/49RS	1 235 522 189	2.7479PHT
071366701010	2.8201PHT	1 234 332 107	3.7521RS	1 234 332 800	3.7593	1 235 522 193	2.7479PHT
071366702010	2.8201PHT	1 234 332 109	3.7521RS	1 234 332 801	3.7593RS	1 235 522 195	2.7481PHT
071366801010	2.8198PHT	1 234 332 144	3.7567RS	1 234 332 802	3.7691	1 235 522 196	2.7480PHT
071371301010	3.8260	1 234 332 158	3.7567RS	1 234 332 803	3.7681	1 235 522 198	2.7481PHT
08.502	4.9654	1 234 332 162	3.7567RS	1 234 332 805	3.7683RS	1 235 522 199	2.7479PHT
08.510	4.9305	1 234 332 173	3.7524RS	1 234 332 808	3.8237	1 235 522 201	2.7479PHT
08.512	4.9323	1 234 332 177	3.7523RS	1 234 332 809	3.8237RS	1 235 522 202	2.7480PHT
0825	4.8514	1 234 332 197	3.7524RS	1 234 332 810	3.8237	1 235 522 203	2.7479PHT
0890	4.9888	1 234 332 200	3.7573/13RS	1 234 332 811	3.8237RS	1 235 522 208	2.7490PHT
09.506	4.8509	1 234 332 204	3.7534RS	1 234 332 812	3.8237	1 235 522 213	2.7494PHT
09.515	4.9237	1 234 332 208	3.7527RS	1 234 332 813	3.8237RS	1 235 522 218	2.7493PHT
09.516	4.8527	1 234 332 209	3.7567RS	1 234 332 814	3.8236RS	1 235 522 219	2.7479PHT
09.518	4.8514	1 234 332 213	3.7525RS	1 234 332 827	3.7614	1 235 522 227	2.7479PHT
09.519	4.8634	1 234 332 215	3.7525RS	1 234 332 828	3.7614	1 235 522 229	2.7481PHT
09.531	4.8688	1 234 332 216	3.7526RS	1 234 332 836	3.7514RS	1 235 522 256	2.7479PHT
09.532	4.9562	1 234 332 220	3.7573/15RS	1 234 332 838	3.7688RS	1 235 522 290	2.7481PHT
09.536	4.9531	1 234 332 236	3.7524RS	1 234 332 841	3.7688RS	1 235 522 295	2.7481PHT
09.538	4.9529	1 234 332 237	3.7524RS	1 234 332 845	3.7688RS	1 235 522 307	2.7499
09.539	4.8688	1 234 332 242	3.7573/16RS	1 234 332 848	3.8112	1 235 522 315	2.7479PHT
09.543	4.8527	1 234 332 261	3.7525RS	1 234 332 849	3.8242RS	1 235 522 322	2.7509PHT
09.545	4.8689	1 234 332 271	3.7561RS	1 234 332 850	3.7683RS	1 235 522 323	2.7492PHT
09.554	4.9947	1 234 332 272	3.7573/17RS	1 234 332 859	3.8714RS	1 235 522 324	2.7490PHT
099 700-061	9.6357	1 234 332 273	3.7556RS	1 234 332 860	3.7694	1 235 522 325	2.7517PHT*A
099 700-072	9.6357	1 234 332 275	3.7561RS	1 234 332 861	3.7596	1 235 522 326	2.7508PHT
099 700-101	9.6422	1 234 332 276	3.7573/12RS	1 234 332 902	3.7512RS	1 235 522 327	2.7508PHT*A
099 700-114	9.6357	1 234 332 277	3.7573/17RS	1 234 332 903	3.7514RS	1 235 522 329	2.7523PHT
1 046 7543	2.7575PHT	1 234 332 279	3.7560RS	1 234 332 904	3.7518RS	1 235 522 330	2.7523PHT*A
1 046 7546	3.7598	1 234 332 280	3.7527RS	1 234 332 906	3.7521RS	1 235 522 332	2.7524PHT
1 049 5408	3.7598	1 234 332 281	3.7573/15RS	1 234 332 907	3.7521RS	1 235 522 333	2.7521PHT
1 049 5411	3.7598	1 234 332 282	3.7549RS	1 234 332 908	3.7525RS	1 235 522 356	2.7479PHT
1 049 5822	2.7575PHT	1 234 332 284	3.7573/17RS	1 234 332 918	3.7593RS	1 235 522 357	2.7494PHT
1 049 6278	2.7575PHT	1 234 332 285	3.7526RS	1 234 335 082	3.7514RS	1 235 522 361	2.7521PHT
1 103 516	8.3411*N	1 234 332 288	3.7573/15RS	1 234 335 215	3.7525RS	1 235 522 362	2.7481PHT*A
1 103 549	8.3411*N	1 234 332 291	3.7567RS	1 234 335 216	3.7526RS	1 235 522 364	2.7530/8PHT
1 212 208	3.7593	1 234 332 296	3.7560RS	1 234 335 280	3.7527RS	1 235 522 365	2.7530/8PHT*A
1 214 140	2.7566PHT	1 234 332 300	3.7555RS	1 234 335 300	3.7555RS	1 235 522 366	2.7527PHT

1 235 522 368	2.7523PHT
1 235 522 369	2.7530/1PHT
1 235 522 370	2.7529PHT
1 235 522 371	2.7530/1PHT
1 235 522 372	2.7530/31PHT
1 235 522 374	2.7530/5PHT
1 235 522 375	2.7530/36PHT
1 235 522 380	2.7530/4PHT*A
1 235 522 381	2.7530/4PHT
1 235 522 382	2.7527PHT*A
1 235 522 384	2.7530/7PHT
1 235 522 385	2.7530/1PHT*A
1 235 522 387	2.7530/6PHT
1 235 522 388	2.7530/6PHT*A
1 235 522 390	2.7530/3PHT
1 235 522 391	2.7530/9PHT
1 235 522 392	2.7530/9PHT*A
1 235 522 395	2.7528PHT*A
1 235 522 396	2.7530/17PHT*A
1 235 522 397	2.7530/17PHT
1 235 522 399	2.7530/10PHT
1 235 522 400	2.7530/10PHT*A
1 235 522 401	2.7530/11PHT
1 235 522 404	2.7530/1PHT
1 235 522 405	2.7530/1PHT*A
1 235 522 408	2.7530/30PHT*A
1 235 522 409	2.7480PHT*A
1 235 522 417	2.7530/21PHT*A
1 235 522 418	2.7530/21PHT
1 235 522 419	2.7530/18PHT
1 235 522 420	2.7530/18PHT*A
1 235 522 421	2.7530/8PHT
1 235 522 423	2.7530/23PHT
1 235 522 424	2.7480PHT
1 235 522 426	2.7530/3PHT
1 235 522 434	2.7530/27PHT
1 235 522 435	2.7530/27PHT*A
1 235 522 436	2.7530/19PHT
1 235 522 437	2.7530/26PHT
1 235 522 438	2.7530/28PHT
1 235 522 439	2.7530/28PHT*A
1 235 522 442	2.7530/22PHT*A
1 235 522 443	2.7494PHT
1 235 522 444	2.7530/36PHT
1 235 522 447	2.7530/30PHT
1 235 522 449	2.7530/3PHT*A
1 235 522 453	2.7530/33PHT
1 235 522 454	2.7530/33PHT*A
1 235 522 456	2.7479PHT
1 235 522 465	2.7494PHT
1 235 522 496	2.7480PHT
1 235 522 801	2.7566PHT
1 235 522 803	2.7649PHT
1 235 522 804	2.7641
1 235 522 805	2.7645
1 235 522 806	2.7645
1 235 522 807	2.8169
1 235 522 810	2.8181
1 235 522 812	2.8543
1 235 522 816	2.7903
1 235 522 819	2.7903
1 235 522 822	2.7783
1 235 522 829	2.8186
1 235 522 831	2.8075
1 235 522 832	2.7659PHT
1 235 522 835	2.8625
1 235 522 836	2.8169
1 235 522 837	2.7714
1 235 522 843	2.8078
1 235 522 844	2.8190
1 235 522 845	2.7654PHT
1 235 522 863	2.7573PHT
1 235 522 901	2.7476PHT
1 235 522 902	2.7472PHT
1 235 522 903	2.7476PHT
1 235 522 904	2.7472PHT
1 235 522 905	2.7479PHT
1 235 522 907	2.7462
1 235 522 908	2.7479PHT
1 235 522 930	2.7566PHT
1 235 522 931	2.7480PHT
1 235 525 056	2.7479PHT
1 235 525 059	2.7476PHT
1 235 525 196	2.7480PHT
1 235 525 801	2.7566PHT
1 235 525 803	2.7649PHT
1 235 525 806	2.7645
1 235 525 812	2.8543
1 237 000 065	2.7530/11PHT*A
1 237 010 027	8.2723
1 237 010 033	8.2733
1 237 010 039	8.2723
1 237 011 073	8.2659
1 237 011 076	8.2693
1 237 011 081	8.2719
1 237 011 111	8.2693
1 237 011 114	8.2733
1 237 011 119	8.2734
1 237 011 122	8.2723
1 237 011 124	8.2723
1 237 013 000	1.2547
1 237 013 001	1.2547
1 237 013 002	1.2534HDVS
1 237 013 003	1.2547
1 237 013 006	1.2529HDV
1 237 013 007	1.2529HDV
1 237 013 008	1.2521
1 237 013 009	1.2529HDV
1 237 013 010	1.2529HDV
1 237 013 025	1.2529HDV
1 237 013 027	1.2521
1 237 013 029	1.2529HDV
1 237 013 039	1.2532HDV
1 237 013 041	1.2521
1 237 013 042	1.2521
1 237 013 044	1.2534HDVS
1 237 013 045	1.2529HDV
1 237 013 047	1.2521
1 237 013 049	1.2529HDV
1 237 013 051	1.2534HDVS
1 237 013 052	1.2549HDVS
1 237 013 053	1.2529HDV
1 237 013 055	1.2532HDV
1 237 013 056	1.2529HDV
1 237 013 057	1.2540
1 237 013 059	1.2549HDVS
1 237 013 060	1.2547
1 237 013 061	1.2549HDVS
1 237 013 062	1.2549HDVS
1 237 013 063	1.2534HDVS
1 237 013 065	1.2534HDVS
1 237 013 066	1.2534HDVS
1 237 013 068	1.2540
1 237 013 074	1.2534HDVS
1 237 013 075	1.2562
1 237 013 077	1.2534HDVS
1 237 013 079	1.2562
1 237 013 081	1.2534HDVS
1 237 013 082	1.2549HDVS
1 237 013 083	1.2534HDVS
1 237 013 086	1.2562
1 237 013 087	1.2534HDVS
1 237 013 088	1.2534HDVS
1 237 013 090	1.2534HDVS
1 237 013 091	1.2562
1 237 013 094	1.2534HDVS
1 237 013 096	1.2534HDVS
1 237 013 098	1.2534HDVS
1 237 013 101	1.2547
1 237 013 102	1.2529HDV
1 237 013 103	1.2529HDV
1 237 013 105	1.2532HDV
1 237 013 106	1.2534HDVS
1 237 013 107	1.2540
1 237 013 108	1.2562
1 237 013 109	1.2534HDVS
1 237 013 110	1.2534HDVS
1 237 013 111	1.2534HDVS
1 237 013 112	1.2562
1 237 013 113	1.2549HDVS
1 237 013 114	1.2534HDVS
1 237 013 115	1.2562
1 237 013 116	1.2534HDVS
1 237 013 117	1.2534HDVS
1 237 013 119	1.2534HDVS
1 237 013 121	1.2549HDVS
1 237 013 122	1.2562
1 237 013 123	1.2534HDVS
1 237 013 124	1.2534HDVS
1 237 013 125	1.2534HDVS
1 237 013 129	1.2549HDVS
1 237 013 130	1.2534HDVS
1 237 013 138	1.2534HDVS
1 237 013 139	1.2562
1 237 013 140	1.2534HDVS
1 237 013 143	1.2562
1 237 013 144	1.2534HDVS
1 237 013 145	1.2534HDVS
1 237 013 146	1.2549HDVS
1 237 013 147	1.2549HDVS
1 237 013 150	1.2534HDVS
1 237 013 151	1.2549HDVS
1 237 013 152	1.2549HDVS
1 237 013 157	1.2549HDVS
1 237 013 158	1.2549HDVS
1 237 013 300	1.3691/6
1 237 013 302	1.3691/6
1 237 013 305	1.3691/5
1 237 013 307	1.5945
1 237 013 600	1.4456HDV
1 237 013 710	1.2529HDV
1 237 013 712	1.2534HDVS
1 237 013 713	1.4920
1 237 013 714	1.4932
1 237 013 715	1.4143HDV
1 237 013 717	1.3661
1 237 013 718	1.3664
1 237 013 719	1.4683MHDV
1 237 013 720	1.3656
1 237 013 724	1.4144HDV
1 237 013 728	1.4143HDV
1 237 013 802	1.3455HDVS
1 237 013 803	1.4920
1 237 013 804	1.4932
1 237 013 805	1.4939
1 237 013 806	1.4940
1 237 013 808	1.3655
1 237 013 809	1.3661
1 237 013 811	1.3664
1 237 013 812	1.3667
1 237 013 814	1.3691/11U
1 237 013 819	1.4683MHDV
1 237 013 821	1.6854
1 237 013 824	1.4923
1 237 013 826	1.3511HDV
1 237 013 827	1.3676
1 237 013 828	1.3691/11U
1 237 013 831	1.4942
1 237 013 832	1.4456HDV
1 237 013 835	1.4927
1 237 013 837	1.7271
1 237 013 838	1.3686
1 237 013 840	1.3691/2
1 237 013 842	1.3455HDVS
1 237 013 846	1.3455HDVS
1 237 013 848	1.3691/3
1 237 013 901	1.2547
1 237 013 902	1.2529HDV
1 237 013 904	1.2532HDV
1 237 013 906	1.2534HDVS
1 237 013 907	1.2540
1 237 013 910	1.3655
1 237 013 911	1.6854
1 237 013 912	1.2549HDVS
1 237 013 913	1.2534HDVS
1 237 013 914	1.2534HDVS
1 237 013 915	1.2549HDVS
1 237 013 916	1.2534HDVS
1 237 013 917	1.2534HDVS
1 237 013 918	1.3455HDVS
1 237 013 919	1.4932
1 237 013 920	1.4939
1 237 013 921	1.4940
1 237 013 923	1.2534HDVS
1 237 013 924	1.3455HDVS
1 237 015 802	1.3455HDVS
1 237 015 804	1.4932
1 237 015 805	1.4939
1 237 015 806	1.4940
1 237 015 808	1.3655
1 237 015 821	1.6854
1 237 015 848	1.3691/3
1 237 031 093	8.2744
1 237 031 123	8.2653*S
1 237 031 180	8.2733
1 237 031 296	8.2723
1 237 031 339	8.2744
1 237 330 035	0.0130
1 237 330 036	0.0130
1 237 330 039	0.0130
1 237 330 307	0.0179/112
1 237 330 310	0.0179/96
1 237 330 316	0.0179/95
1 237 330 340	0.0179/112
1 237 330 348	0.0179/157
1 237 330 353	0.0179/112
1 237 330 801	0.0323
1 237 330 803	0.0323
1 237 330 805	0.0334
1 237 330 806	0.0334
1 237 330 810	0.0856
1 237 330 811	0.0856
1 237 330 828	0.0617
1 601 0892	9.4025
1 612 229	1.3455HDVS
1 847 291	3.7590
1 849 955	3.7590
1 883 500	3.7590
1 905 590	3.7590
1 909 590	3.7590
1 936 109	3.7596
1 945 376	1.4927
1 972 927	2.7573PHT
1 977 958	9.4025
1 979 107	9.4025
1 985 771	2.7574PHT
1 986 109	3.7596
1 987 231 000	1.3511HDV
1 987 231 001	1.3511HDV
1 987 231 004	1.4456HDV
1 987 231 006	1.5084
1 987 231 015	1.5084
1 987 231 020	1.3522HDV
1 987 231 032	1.5084
1 987 231 033	1.5085
1 987 231 900	1.3511HDV
1 987 231 904	1.4456HDV
1 987 231 915	1.5084
1 987 231 932	1.5084
1 987 231 933	1.5085
1 987 233 003	2.8303/1
1 987 233 008	2.7903
1 987 233 012	2.8303/1
1 987 233 020	2.8303/1
1 987 233 022	2.7593
1 987 233 030	2.7630/32
1 987 233 032	2.7622
1 987 233 033	2.7592
1 987 233 036	2.7911
1 987 233 037	2.7922
1 987 233 043	2.8322/18
1 987 233 044	2.8322/21
1 987 233 047	2.7957
1 987 233 051	2.7940
1 987 233 052	2.7946
1 987 233 054	2.7623

1 987 233 055	2.7607
1 987 233 908	2.7903
1 987 233 912	2.8303/1
1 987 234 001	3.7614
1 987 234 003	3.7614
1 987 234 009	3.8323
1 987 234 015	3.7952
1 987 234 021	3.7614
1 987 234 024	3.8323
1 987 234 025	3.7627
1 987 234 027	3.7629
1 987 234 031	3.7973
1 987 234 033	3.8331/13
1 987 234 038	3.8331/10
1 987 234 041	3.7628
1 987 234 042	3.7956
1 987 234 901	3.7614
1 987 234 909	3.8323
1 987 948	2.7575PHT
1 988 515	3.7597
10.509	4.8747
10.510	4.8748
10.511	4.8494
10.513	4.9025
10.515	4.8494
10.516	4.8674
10.520	4.9374
10.521	4.9374
100 885 0001	9.6254S
100 885 0002	9.6345
100 885 0007	9.6336
100 885 0012	9.6331
100 885 0020	9.6337
100 885 0022	9.6334
100 885 0023	9.6327
100 885 0024	9.6499
100 885 0026	9.6333
100 885 0027	9.6254S
100 885 0040	9.6374
100 905 0007	9.8114
100 905 0025	9.6326
1002	1.1805
1003	8.2653
101 106	9.6001D
101 106 K	9.6001D
101 406	9.6032
101 407	9.6027
101 413	9.6025
101.001	9.6286K
101.002	9.6287K
101.002E	9.6287
101.006	9.6297
101.006E	9.6297
101.300	1.1805
10230- 2	2.8169
10230- 4	2.8169
10230- 7	2.8169
10230-12	2.8169
10230-13	2.8169
10249-43	0.0397
10249-43J	0.0397
10254- 1	1.4927
1029005-6005	1.2568
103 240	9.6025
104 033	9.8114
104.001	9.6313
104.004	9.6312
104.005	9.6507
104.005E	9.6507
104.008	9.6062S
104.011E	9.6375
104.012	9.6532
104003	9.6375
1057	8.2719
106.002	9.6342
106.002E	9.6342
106.003	9.6284
106.003E	9.6284
106.005	9.6214
106.005E	9.6214
106.006E	9.6287
1060	8.2693
1061	8.2731
1062	8.2723
1063	8.2734
1064	8.2733
108.001	9.6216K
108.007	9.6387
108.007E	9.6387
108.011E	9.6526
1087	8.2659
109 039	9.6374
109 316	9.8120
109 540	9.6345
109 541	9.6329
109.001	9.6299
109.001E	9.6299
109.002	9.6298
109.003	9.6300
109.004	9.6408
109.004E	9.6408
109.005	9.6407
109.005E	9.6407
109.006E	9.6350
109.020	9.6447
109.020E	9.6447
109.029	9.6531
109.029E	9.6531
109006	9.6350
109007	9.6300
11.513	4.8801
11.514	4.8801
11.515	4.8539
11.517	4.8801
11.522	4.8802
11.523	4.9332
11.527	4.8920
11.530	4.9446
11.532	4.8539
11.534	4.8417
11.535	4.9447
11.536	4.8543
11.538	4.9447
11.539	4.7244
11.541	4.8415
11.543	4.9492
11.545	4.8801
11.546	4.7244
11.548	4.7049
11.560	4.7230
11.561	4.7246
11.861	4.7246
110 572	9.6336
110 921	9.6334
110.001	9.6303
110.001E	9.6303
110.002	9.6305
110.007E	9.6308
110.010E	9.6307
110.011	9.6409
110.020	9.6383
110.020E	9.6383
110.022	9.6520
110.023	9.6509
110.023E	9.6509
110.024	9.6397
110.024E	9.6397
110007	9.6308
110010	9.6307
110021	9.6361
1101	8.2722
1104082	9.6350
1104091	9.6383
111 088	9.6331
111 310	9.6254S
111 621	9.6327
111 741	9.6326
111 743	9.6335
111.002	9.6319
111.003	9.6332
111.003E	9.6332
111.005	9.6418
111.006	9.6418
111.010	9.6513
111.010E	9.6513
11-14 885 0002	9.6307
11-14 885 0004	9.6409
11-14 885 0006	9.6383
11-14 885 0007	9.6308
114 213	9.6333
114 885 0005	9.6325
114 885 0006	9.6329
114 885 0007	9.8120
114.001	9.6374
114.002	9.6329
114.006	9.6327
114.006E	9.6327
114.007	9.6326
114.007E	9.6326
114.008	9.6345
114.008E	9.6345
114.009	9.6254S
114.009E	9.6254S
114.010E	9.6374
114.013	9.6334
114.014	9.6336
114.014E	9.6336
114.015	9.6331
114.016	9.6333
114.016E	9.6333
114.019	9.6334
114.020	9.6499
114.022	9.6335
114.022E	9.6335
114.024	9.6325
114010	9.6374
115.002E	9.6380
115.004	9.6519
115.004E	9.6519
116 400	9.6499
118.001	9.6348
118.001E	9.6348
118.002	9.6378
118.002E	9.6378
12.508	4.8612
12.509	4.8725
12.512	4.8725
12133- 1	3.7752
12133- 4	3.7752
12146- 1	1.4932
12146- 3	1.4940
125.003	9.6491
125.003E	9.6491
1250	8.4961/1
1252	8.4963/1
126.008	9.6457
126.008E	9.6457
126.009	9.6389
126.009E	9.6389
126.012	9.6502
126.016	9.6451
126.018E	9.6452
1264	8.4980M
1266	8.4976M
1269	8.4977/1
1270	8.4980M
1272	8.4978M
129.009E	9.6538
129.010	9.6511
129.010E	9.6511
129.011E	9.6392
129.012	9.6456
129.012E	9.6456
13 3805	9.6254
13 3806	9.6329
13 3807	9.6374
13 3808	9.6326
13 3812	9.6331
13 3828	9.6345
13 3831	9.6327
13 3832	9.6350
13 3834	9.6336
13 3835	9.6327
13 3836	9.6326
13 8001	9.4005
13 8002	9.4004
13 8004	9.4007
13 8007	9.8114
13 8012	9.4034
13 8026	9.4025
13 8030	9.4029
13 8034	9.4036
13 8052	9.4051
13 8068	9.4052
13 8082	9.4020
13 8106	8.2653
13 8131	8.3619
13 8134	8.3617
13 8172	8.4961/1
13 8174	8.4963/1
13 8185	8.4978M
13 8191	8.4977/1
13 8192	8.4980M
13 8193	8.4976M
13 8194	8.4980M
13 8416	9.8116
131.002E	9.6357
131.005	9.6508
131.005E	9.6508
131.006	9.6429
131.006E	9.6429
131.008	9.6422
131.008E	9.6422
131.009E	9.6503
131.012	9.6427
132.002	9.6416
132.002E	9.6416
132.003	9.6414
133.001E	9.6359
133.003	9.6361
133.008	9.6358
133.008E	9.6358
133.010	9.6366
133.010E	9.6366
133.012	9.6436
133.012E	9.6436
133.015	9.6437
133009	9.6361
133800	9.6332
133805	9.6254S
133806	9.6329
133806	9.6329
133807	9.6374
133809	9.6299
133810	9.6408
133812	9.6331
133817	9.6303
133818	9.6305
133819	9.6307
133825	9.6375
133828	9.6345
133831	9.6327
133832	9.6350
133832	9.6350
133834	9.6336
133836	9.6326
133841	9.6297
133842	9.6376
133843	9.6409
133845	9.6333
133846	9.6361
133846	9.6361
133847	9.6334
133848	9.6335
133852	9.6380
133854	9.6383

133860	9.6457
133861	9.6287
133863	9.6389
133870	9.6348
133874	9.6358
133875	9.6375
133876	9.6507
133879	9.6407
133883	9.6308
133883	9.6308
133909	9.6502
133910	9.6429
133913	9.6357
133926	9.6284
133929	9.6451
133930	9.6508
133936	9.6416
133939	9.6414
133941	9.6436
133944	9.6427
133950	9.6486
133956	9.6523
133962	9.6520
133963	9.6491
133965	9.6527
133971	9.6436
133973	9.6545
133974	9.6438
134003	9.6503
134006	9.6392
134010	9.6366
134035	9.6443
134038	9.6437
134041	9.6387
134044	9.6422
134045	9.6395
134048	9.6447
134051	9.6509
134058	9.6513
134080	9.6511
134081	9.6514
134083	9.6397
134085	9.6519
134086	9.6403
134087	9.6405
134090	9.6532
134093	9.6531
134094	9.6526
134114	4.7239
134117	4.7235
134119	4.9509
134130	4.9209
134132	4.9880
134202	4.8514
134203	4.8689
134214	4.8689
134227	4.9634
134234	4.9531
134236	4.9680
134239	4.9731
134246	4.9529
134260	4.7006
134263	4.7007
134268	4.9511
134272	4.9451
134273	4.9739
134275	4.9531
134276	4.8608
134278	4.7242
134279	4.9278
134280	4.9411
134286	4.9745
134287	4.9888
134296	4.9237
134332	4.9504
134333	4.9505
134337	4.7236
134373	4.9889
134375	4.7249
134376	4.7241
134377	4.7251
134431	4.8674
134432	4.8494
134464	4.9446
134467	4.8616
134471	4.8780
134484	4.8615
134497	4.9025
134518	4.9503
134528	4.9385
134534	4.9363
134560	4.7061
134603	4.7111
134619	4.9883
134758	4.9363
134871	4.8634
134952	4.9643
134955	4.7245
134958	4.7059
134961	4.7248
1351	8.3619
1355	8.3617
138.004	9.6395
138.004E	9.6395
138.005	9.6443
138.005E	9.6443
138.006	9.6514
138.006E	9.6514
138415	9.8114
138425	9.8120
138701	9.6169
138704	9.8120
138709	9.6317
138712	9.6319
138713	9.6418
138716	9.6078
138718	9.6482
138727	9.6323
138730	9.6046
138734	9.6196
138735	9.6128
138736	9.6175
138737	9.6166
138738	9.6096
138739	9.6245
138744	9.6079
138746	9.6396
138749	9.6486
138752	9.6055
138754	9.6005
138756	9.6089
138757	9.6255
138758	9.6256
138759	9.6276
138760	9.6088
138762	9.6172
138765	9.6265
138766	9.6278
138769	9.6323
138780	9.6040
138793	9.6068
138800	9.6035
138803	9.6069
138803	9.6432
138810	9.6247
138811	9.6432
138812	9.6114
138856	9.6479
138866	9.6098
138868	9.6103
14.502	4.8736
14.503	4.9549
14.506	4.8725
14.507	4.8725
14.508	4.9364
14.510	4.8493
14.512	4.9364
14.513	4.8737
14.514	4.8965
14.515	4.8737
14.516	4.9667
14.517	4.9575
14.521	4.9580
14.523	4.9640
14.524	4.9601
14.525	4.9601
14.526	4.8725
14.532	4.9609
14.534	4.9489
14.561	4.7223
1420	4.8920
1429	4.7244
1431	4.9492
1439	4.7049
1443	4.9681
145.002	9.6403
145.002E	9.6403
15 43 01	9.6303
15 43 02	9.6305
15.506	4.9078
15.508	4.9281
15.513	4.9281
15.514	4.8864
15.515	4.9630
15.516	4.8864
15.520	4.9630
15.527	4.9619
15.528	4.9630
15.534	4.9691
15.536	4.9634
15.541	4.9568
15.542	4.9614
15.543	4.9624
1514	9.6319
151401	9.6319
151408	9.6418
1543	9.6303
154301	9.6303
154302	9.6305
154303	9.6305
155001	9.6214
155002	9.6286
155003	9.6298
155004	9.6216
155006	9.6297
155009	9.6380
155010	9.6432
155013	9.6276
155014	9.6278
155015	9.6096
155016	9.6496
155017	9.6046
155018	9.6255
155019	9.6256
155020	9.6342
155022	9.6300
155022	9.6300
155025	9.6175
155026	9.8114
155026	9.8114
155027	9.6308
155027	9.6308
155028	9.6359
155028	9.6359
155029	9.6300
155031	9.6409
155032	9.6307
155032	9.6307
155033	9.6088
155034	9.6089
155038	9.6408
155039	9.6350
155039	9.6350
155040	9.6376
155041	9.6376
155045	9.6298
155046	9.6407
155049	9.6375
155050	9.6265
155051	9.6245
155054	9.6334
155056	9.6008
155057	9.6172
155058	9.6048
155059	9.6055
155060	9.6128
155061	9.6007
155062	9.6241
155064	9.6040
155065	9.6058
155066	9.6114
155067	9.6274
155068	9.6294
155069	9.6059
155070	9.6314
155071	9.6099
155072	9.6317
155073	9.8123
155074	9.6323
155074	9.6323
155075	9.6381
155076	9.6068
155077	9.6217
155079	9.6119
155082	9.6005
155083	9.6006
155085	9.6078
155086	9.6113
155088	9.6348
155089	9.6173
155092	9.6457
155093	9.6485
155095	9.6213
155100	9.6062S
155102	9.6327
155103	9.6325
155104	9.6331
155106	9.6335
155109	9.6337
155110	9.6336
155111	9.6333
155113	9.6486
155118	9.6480
155119	9.6489
155125	9.6502
155136	9.6375
155138	9.6389
155140	9.6361
155140	9.6361
155141	9.6366
155142	9.6358
155148	9.6383
155149	9.6247
155154	9.6133
155164	9.6068
155166	9.6485
155174	9.6395
155177	9.6481
155180	9.6378
155183	9.6396
155184	9.6435
155190	9.6375
155200	9.6313
155205	9.6445
155205	9.6445
155400	9.6062S
155500	9.6254S
155700	9.6062S
156100	9.8120
156200	9.6332
156200	9.6332
156300	9.6299
157100	9.6284
157400	9.6374
157400	9.6374
157400P	9.6374

157500	9.6329	2 525 684 A	8.3619*N	2 526 131 A	9.6409	2 591 820	1.5084
157500	9.6329	2 525 687 A	8.3619*N	2 526 151 A	9.6496	2 591 821	1.4949M
157600	9.6345	2 525 693 A	8.3619*N	2 526 180 A	9.6332	2 591 821	1.4949M
157700	9.6327	2 525 696 A	8.3619*N	2 526 182 A	9.6307	2 591 823	1.4946M
157900	9.6326	2 525 698 A	8.3619*N	2 526 182 B	9.6307	2 591 823	1.4946M
16-14 885 0001	9.6496	2 525 708 A	8.3619*N	2 526 208	9.6305	2 591 824	0.0627
16-14 885 0002	9.6332	2 525 711 A	8.3619*N	2 528 001	9.4029	2 591 824	0.0627
16-14 885 0003	9.6319	2 525 712 A	8.3619*N	2 528 001 A	9.4029	2 591 838	3.7573/12RS
16-14 885 0004	9.6418	2 525 713 A	8.3619*N	2 528 001 A	9.4029	2 595 007	9.4004
16-14 885 0006	9.6096	2 525 747 A	8.3619*N	2 528 008	9.4005	2 595 009	9.4007
16-14 885 0010	9.6265	2 525 750 A	8.3619*N	2 528 008 A	9.4005	2 595 013	9.4020
16-14 885 0015	9.6513	2 525 753	8.3619*N	2 528 008 A	9.4005	2 595 016	9.4036
1650	8.3410	2 525 755	8.3619*N	2 537 065	2.7680PHT	2 595 020	9.8114
1651	8.3411	2 525 756 A	8.3619*N	2 537 077	2.7680PHT	2 595 025	9.4034
17-5607	9.4005	2 525 765 A	8.3619*N	2 537 260	3.7704	2 595 041	9.4052
18.507	4.8417	2 526 009	9.6006	2 537 260	3.7704	2 783 039 001 Z	1.2568
18.510	4.8372	2 526 009	9.6006	2 537 268	2.7675PHT	2 790 000	9.6001D
18.511	4.7064	2 526 009 A	9.6006	2 553 495	2.7681PHT	2001	9.4005
18.515	4.7061	2 526 015	9.6002	2 553 499 0	3.7701	2002	9.4005
18.516	4.8417	2 526 015	9.6002	2 558 654	3.7696RS	2003	9.4004
18.519	4.8372	2 526 015 A	9.6002	2 558 654	3.7696RS	2007	9.4007
18.524	4.7059	2 526 017	9.6001D	2 558 743	3.7701	202 515	4.8514
1801	4.7013	2 526 017	9.6001D	2 558 743	3.7701	202 527	4.8689
18051- 3	3.7752RS	2 526 017 0	9.6001D	2 559 115	3.7697	202 530	4.8634
18603	2.7716	2 526 023	9.6007	2 559 115	3.7697	202 531	4.9531
18603- 1	2.7714	2 526 023	9.6007	2 590 166	1.3691/26*P	205 106	4.9529
18603- 3	2.7714	2 526 023 A	9.6007	2 590 166	1.3691/26*P	2053	9.4025
18603- 5	2.7714	2 526 026	9.6055	2 590 251	0.0856	206 242	4.8688
18603- 6	2.7716	2 526 026 A	9.6055	2 590 253	1.3691/11U	206 636	9.6040
18603- 8	2.7716	2 526 026 A	9.6055	2 590 253	1.3691/11U	206 638	9.6172
18603- 9	2.7716	2 526 030	9.6008	2 590 254	1.3691/12U	206 640	9.6299
18603-11	2.7714	2 526 034	9.6128	2 590 254	1.3691/12U	206 641	9.6298
18603-11J	2.7714	2 526 035 A	9.6089	2 590 264	8.3617	206 643	9.6408
19005212	9.6299	2 526 035 A	9.6089	2 590 832	9.6001D	206.001E	9.6046
19005267	9.6387	2 526 037 A	9.6088	2 590 841	1.3522HDV	206.002	9.6245
19005293	9.6375	2 526 037 A	9.6088	2 590 843	1.3726	206.002E	9.6245
19005316	9.6507	2 526 039	9.6089	2 590 846	1.4949	206.004	9.6008
19005358	9.6445	2 526 040 A	9.6088	2 590 862	0.0179/96	206.004E	9.6008
19005358	9.6445	2 526 040 A	9.6088	2 590 871	0.0179/157	206.009	9.6068
19005362	9.6447	2 526 040 A	9.6088	2 590 874	2.7481PHT	206.009E	9.6068
2 207 013 002	1.2564	2 526 048	9.6007	2 590 877	2.7493PHT	206.010	9.6003
2 207 013 003	1.2564	2 526 048 A	9.6007	2 590 878	2.7494PHT	206001	9.6046
2 207 013 004	1.2571	2 526 048 A	9.6007	2 590 879	2.7508PHT	206007	9.6323
2 207 013 005	1.2571	2 526 049	9.6040	2 590 880	2.7509PHT	207 022	9.6332
2 207 013 007	1.2564	2 526 049 A	9.6040	2 590 881	2.7521PHT	207 466	9.6350
2 207 110 007	1.2571	2 526 050	9.6241	2 590 882	2.7524PHT	208 333	9.6447
2 207 330 011	0.0130	2 526 050 A	9.6241	2 590 883	2.7529PHT	208 441	9.6445
2 207 330 041	0.0179/80	2 526 051	9.6255	2 590 884	2.7530/1PHT	208 441	9.6445
2 207 330 050	0.0179/80	2 526 051 A	9.6255	2 590 886	2.7593	208.001	9.6317
2 524 086	2.7669PHT	2 526 051 A	9.6255	2 590 889	2.7716	208.001E	9.6317
2 524 128	2.7670	2 526 052	9.6256	2 590 892	2.8322/9	209.002	9.6172
2 524 132	3.7697	2 526 052 A	9.6256	2 590 893	2.8096PHT	209.002E	9.6172
2 524 134	2.7674PHT	2 526 052 A	9.6256	2 590 893	2.8096PHT	209.006	9.6119
2 524 134	2.7674PHT	2 526 055	9.6172	2 590 896	2.8209PHT	209.006E	9.6119
2 525 551 B	8.3619*N	2 526 055 A	9.6172	2 590 897	3.7512RS	209.008	9.6040
2 525 623 D	2.7686PHT*M	2 526 055 A	9.6172	2 590 898	3.7523RS	209.008E	9.6040
2 525 626 B	8.3617*N	2 526 055 A	9.6172	2 590 899	3.7525RS	209.009E	9.6241
2 525 626 C	8.3617*N	2 526 060	9.6003	2 590 900	3.7555RS	209.013	9.6289
2 525 628	2.7678PHT*M	2 526 062	9.6011	2 590 901	3.7556RS	209.013E	9.6289
2 525 628	2.7678PHT*M	2 526 063	9.6009	2 590 902	3.7559RS	20936100	9.6375
2 525 628 B	2.7678PHT*M	2 526 071	9.6025	2 590 904	3.7524RS	20936113	9.6375
2 525 640 B	8.3617*N	2 526 073	9.6274	2 590 905	3.7573/12RS	20945031	9.6375
2 525 640 C	8.3617*N	2 526 073 A	9.6274	2 590 906	3.7573/14RS	20945032	9.6375
2 525 645 A	2.7683PHT*B	2 526 078 A	9.6265	2 590 907	3.7573/16RS	21 940 002	1.3656
2 525 651 A	8.3619*N	2 526 078 B	9.6265	2 590 908	3.7573/21RS	21 940 401	0.0323
2 525 652 A	8.3619*N	2 526 079	9.6265	2 590 910	3.7614	21 943 200	2.8169
2 525 653 A	8.3619*N	2 526 081	9.6094	2 590 911	3.8229	21 943 202	2.8169
2 525 656 A	8.3619*N	2 526 082	9.6003	2 590 913	3.8241	21 945 800	3.7514RS
2 525 657 A	8.3619*N	2 526 110	9.6255	2 590 914	3.8251RS	21.500	4.8511
2 525 658 A	8.3619*N	2 526 110 A	9.6255	2 590 915	3.8254RS	210.001	9.6055
2 525 659 A	8.3619*N	2 526 110 A	9.6255	2 590 916	3.8260	210.001E	9.6055
2 525 660 A	8.3619*N	2 526 111	9.6256	2 590 917	3.7560RS	210.002	9.6005
2 525 661 A	8.3619*N	2 526 111 A	9.6256	2 590 918	3.8126RS	210.002E	9.6005
2 525 663 A	8.3619*N	2 526 111 A	9.6256	2 590 935	2.7677PHT	210.003	9.6006
2 525 667 A	8.3619*N	2 526 114 A	9.6276	2 590 935	2.7677PHT	210.003E	9.6006
2 525 680	8.3619*N	2 526 115 A	9.6278	2 590 938	8.3617	210.004	9.6088
2 525 680 A	8.3619*N	2 526 116 A	9.6408	2 590 945	8.3619	210.004E	9.6088
2 525 683 A	8.3617*N	2 526 117 A	9.6303	2 590 945	8.3619	210.005	9.6089
2 525 683 B	8.3617*N	2 526 118 A	9.6308	2 591 820	1.5084	2102	9.4036

211.001	***9.6128***	245111	***9.6046***	245727	***9.6327***	2503973	***9.6545***
211.001E	***9.6128***	245117	***9.6342***	245731	***9.6507***	2503974	***9.6438***
211.002	***9.6096***	245119	***9.6092***	245733	***9.6358***	2504003	***9.6503***
211.002E	***9.6096***	245122	***9.6128***	245736	***9.6357***	2504006	***9.6392***
211.003	***9.6265***	245124	***9.6008***	245738	***9.6383***	2504010	***9.6366***
211.003E	***9.6265***	245129	***9.6175***	245744	***9.6489***	2504033	***9.6499***
211.004	***9.6496***	245130	***9.6274***	245745	***9.6387***	2504035	***9.6443***
211.004E	***9.6496***	245134	***9.6245***	245750	***9.8003***	2504038	***9.6437***
211.005	***9.6276***	245138	***9.6096***	245757	***9.6512***	2504041	***9.6387***
211.005E	***9.6276***	245139	***9.6432***	2458	***4.7244***	2504044	***9.6422***
211.006	***9.6278***	245141	***9.6374***	245817	***9.6452***	2504045	***9.6395***
211.006E	***9.6278***	245142	***9.6329***	245818	***9.6433***	2504048	***9.6447***
211.007	***9.6175***	245155	***9.6214***	245823	***9.6436***	2504051	***9.6509***
211.007E	***9.6175***	245159	***9.8120***	2476	***4.8802***	2504058	***9.6513***
214 800 0001	***9.6046***	245160	***9.6035***	2476	***4.8802***	2504080	***9.6511***
214 885 0000	***9.6245***	245163	***9.6331***	2497	***4.8415***	2504081	***9.6514***
214 885 0001	***9.6342***	245164	***9.6326***	25.501	***4.9417***	2504083	***9.6397***
214 885 0009	***9.6323***	245165	***9.6254S***	25.503	***4.9417***	2504085	***9.6519***
214 885 0010	***9.6068***	245166	***9.6068***	25.504	***4.7004***	2504086	***9.6403***
214 885 0012	***9.6048***	245168	***9.6299***	25.507	***4.9413***	2504087	***9.6405***
214 885 0015	***9.6449***	245170	***9.6119***	25.509	***4.9434***	2504090	***9.6532***
214.001E	***9.8120***	245174	***9.6359***	25.510	***4.9434***	2504093	***9.6531***
214.002E	***9.8114***	245175	***9.6348***	25.514	***4.7013***	2504094	***9.6526***
214001	***9.8120***	245178	***9.6361***	25.515	***4.9434***	2508415	***9.8114***
214002	***9.8114***	245182	***9.6333***	25.516	***4.9413***	2508419	***9.8114***
215.002	***9.6035***	245187	***9.6317***	25.518	***4.7013***	2508425	***9.8120***
215.004	***9.6070***	245188	***9.6247***	25.519	***4.9417***	2508704	***9.8120***
215.007E	***9.6432***	245189	***9.6070***	2503800	***9.6496***	2508709	***9.6317***
215.009E	***9.6381***	245190	***9.6103***	2503801	***9.6342***	2508712	***9.6319***
2150	***9.4020***	245193	***9.6432***	2503805	***9.6254S***	2508713	***9.6418***
215007	***9.6432***	245195	***9.6418***	2503806	***9.6329***	2508716	***9.6078***
21595273-2	***9.6332***	245203	***9.6378***	2503807	***9.6374***	2508718	***9.6482***
21597716-4	***9.6376***	245205	***9.6481***	2503809	***9.6299***	2508727	***9.6323***
21597716-4	***9.6376***	245207	***9.6287***	2503810	***9.6408***	2508730	***9.6046***
21603121-9	***9.6332***	245215	***9.6392***	2503812	***9.6331***	2508735	***9.6128***
21603800-7	***9.6376***	245223	***9.6289***	2503817	***9.6303***	2508736	***9.6175***
21603800-7	***9.6376***	245228	***9.6133***	2503818	***9.6305***	2508737	***9.6166***
22.509	***4.9711***	245245	***9.6294***	2503819	***9.6307***	2508738	***9.6096***
22.511	***4.9888***	245249	***9.6380***	2503828	***9.6345***	2508739	***9.6245***
22.517	***4.9914***	245250	***9.6457***	2503831	***9.6327***	2508744	***9.6079***
22.518	***4.9889***	245252	***9.6396***	2503832	***9.6350***	2508749	***9.6486***
22.523	***4.9719***	245253	***9.6389***	2503834	***9.6336***	2508752	***9.6055***
2200	***9.4029***	245262	***9.6482***	2503835	***9.6327***	2508754	***9.6005***
22132- 1	***3.8236RS***	245265	***9.6486***	2503836	***9.6326***	2508756	***9.6089***
22132- 1J	***3.8236RS***	245270	***9.6079***	2503841	***9.6297***	2508757	***9.6255***
222.002	***9.6114***	245271	***9.6098***	2503842	***9.6376***	2508758	***9.6256***
222.002E	***9.6114***	245273	***9.6286***	2503843	***9.6409***	2508759	***9.6276***
222.003	***9.6247***	245277	***9.6297***	2503845	***9.6333***	2508760	***9.6088***
222.003E	***9.6247***	245280	***9.6350***	2503846	***9.6361***	2508762	***9.6172***
222.004	***9.6113***	245283	***9.6491***	2503847	***9.6334***	2508764	***9.6496***
222.004E	***9.6113***	245286	***9.6438***	2503848	***9.6335***	2508765	***9.6265***
22431- 1	***3.8241***	245303	***9.6366***	2503852	***9.6380***	2508766	***9.6278***
22488- 1	***3.7752***	245304	***9.6422***	2503854	***9.6383***	2508769	***9.6323***
229.001	***9.6294***	245320	***9.6429***	2503860	***9.6457***	2508780	***9.6040***
229.001E	***9.6294***	245321	***9.6508***	2503861	***9.6287***	2508793	***9.6068***
229.002E	***9.6396***	245324	***9.6407***	2503863	***9.6389***	2508800	***9.6035***
229.009	***9.6482***	245344	***9.6196***	2503870	***9.6348***	2508810	***9.6247***
229.009E	***9.6482***	245349	***9.6405***	2503874	***9.6358***	2508812	***9.6114***
232.001	***9.6133***	245352	***9.6456***	2503876	***9.6507***	2508856	***9.6479***
232.001E	***9.6133***	245358	***9.6416***	2503879	***9.6407***	2508866	***9.6098***
23373- 1	***1.3720***	245359	***9.6514***	2503883	***9.6308***	2508868	***9.6103***
23373- 2	***1.3720***	245360	***9.6511***	2503894	***9.6499***	2571	***4.9503***
23373- 3	***1.3720***	245367	***9.6403***	2503902	***9.6433***	2576 12.70.01	***9.4004***
238.002	***9.6489***	245372	***9.6532***	2503909	***9.6502***	2590	***4.8509***
238.006	***9.6486***	245374	***9.6520***	2503910	***9.6429***	26.505	***4.9411***
238.006E	***9.6486***	245375	***9.6519***	2503913	***9.6357***	26.506	***4.9411***
238.007	***9.6481***	245378	***9.6325***	2503926	***9.6284***	26.508	***4.9658***
238.007E	***9.6481***	245380	***9.6487***	2503929	***9.6451***	26.512	***4.9411***
24.503	***4.9609***	245390	***9.6437***	2503930	***9.6508***	26.513	***4.9658***
24.504	***4.9569***	2456	***4.8801***	2503936	***9.6416***	26951960-3	***9.6305***
24431- 1	***3.8241***	2457	***4.7244***	2503939	***9.6414***	26951960-3	***9.6305***
245	***4.8725***	245701	***9.6445***	2503941	***9.6436***	27.502	***4.9436***
245092	***9.8114***	245701	***9.6445***	2503944	***9.6427***	27.503	***4.9436***
245098	***9.6308***	245703	***9.6012***	2503947	***9.6435***	28.503	***4.9278***
245104	***9.6332***	245707	***9.6185S***	2503950	***9.6486***	28.506	***4.9401***
245106	***9.6276***	245709	***9.6345***	2503962	***9.6520***	28.509	***4.9401***
245107	***9.6278***	245718	***9.6335***	2503963	***9.6491***	28.514	***4.9401***
245108	***9.6408***	245720	***9.6336***	2503965	***9.6527***	28.516	***4.9401***
245109	***9.6303***	245723	***9.6502***	2503971	***9.6436***	28.528	***4.9883***

28114820	9.6375
28-14 885 0000	9.6489
28-14 885 0003	9.6514
28211913	9.6509
28276583	9.6520
28326927	9.6445
28326927	9.6445
28372862	9.6375
28400714	9.6526
28994- 1	3.7758
28994- 1J	3.7758
29.502	4.9401
29.505	4.7119
29.506	4.9385
29.507	4.7120
29.508	4.7119
29.509	4.9401
29.510	4.9401
29.511	4.9385
29.512	4.7119
29.513	4.9385
29.519	4.9385
2995	4.9505
2997	4.8694
3 470 026	1.3455HDVS
3 470 056	3.7593
3 474 221	9.6011
3 474 227	9.6009
3 474 232	9.6241
3 474 282	9.6241
3 479 003	2.7566PHT
3 486 037	3.7595RS
3 489 003	2.7566PHT
300 065	9.6069
30-14 885 0002	9.6103
30-14 885 0004	9.6361
30-14 885 0005	9.6359
30-14 885 0006	9.6358
30-14 885 0010	9.6366
30-14 885 0011	9.6436
30-14 885 0014	9.6437
302 104	9.6432
302 444	9.6381
302 726	9.6380
3-037-0602-0	3.8714RS
304 321	9.6323
304 553	9.6378
305 126	9.6519
30766- 1	2.7723PHT
30766- 1J	2.7723PHT
30922038	9.6374
30927470	9.6329
31.502	4.9711
31.505	4.9686
31.506	4.9686
31.507	4.9709
310 481	9.8116
311 354	9.8114
311 740	9.8120
31-14 885 0002	9.6357
31-14 885 0003	9.6114
31-14 885 0005	9.6429
31-14 885 0006	9.6508
31-14 885 0007	9.6422
311886	9.4074
314 139 0000	9.6062S
314 885 0006	9.6507
314 885 0009	9.6532
318 738	9.4004
3186	1.1806
32.502	4.9745
32.503	4.9398
32.504	4.9231
32.505	4.8884
32.506	4.9639
32.507	4.9231
32.508	4.9760
32.509	4.9760
32.512	4.9398
32.513	4.9760
32.514	4.9231
32.516	4.9739
32493	3.7752RS
32493- 1	3.7752RS
32493- 1JGI	3.8254RS
33.523	4.9856
33.525	4.9435
33.543	4.9856
33-14 885 0003	9.6491
335 622	9.4004
33828- 1	0.0323
33829- 7	2.7658PHT
33830- 1	3.7691
339 109	9.4004
339 373	9.4007
339 700	9.8114
33924- 2	1.3724
33924- 2J	1.3724
33924- 4	1.3726
33924- 4J	1.3726
3414	4.8511
346001	4.7059
346004	4.7241
346009	4.9730
346023	4.9740
346025	4.7239
346038	4.9509
346040	4.7006
346065	4.9739
346076	4.9732
346080	4.9883
346090	4.9507
346094	4.7252
346134	4.8846
346135	4.8780
346139	4.8688
346156	4.9503
346167	4.9511
346186	4.9504
346204	4.8509
346244	4.7244
346248	4.9505
346267	4.9436
346285	4.9446
346299	4.9025
346316	4.9753
346326	4.7061
346340	4.9634
346354	4.7235
346355	4.9731
346404	4.8689
346405	4.8634
346418	4.9209
346451	4.9278
346452	4.9856
346481	4.7120
346524	4.8716
346558	4.9880
346574	4.8597
346577	4.8605
346594	4.8608
346595	4.9745
346598	4.9711
346651	4.8780
346656	4.9889
346670	4.8514
346675	4.9411
346676	4.7223
346679	4.9643
346681	4.7007
346691	4.9681
346692	4.7230
346694	4.7246
346698	4.9451
35.502	4.9835
35.507	4.9835
35-14 885 0002	9.6416
35-14 885 0004	9.6414
36 501 003	1.4456HDV
36 501 025	1.4456HDV
36.501	4.9433
36.503	4.9731
36.504	4.9680
36.505	4.9677
36.506	4.9634
36.507	4.9942
36.508	4.9731
36.509	4.7007
36.510	4.9730
36.511	4.9677
36.512	4.9680
36.514	4.9433
36.520	4.7249
36.820	4.7249
36-14 885 0005	9.6457
36-14 885 0007	9.6389
36-14 885 0008	9.6502
36-14 885 0010	9.6452
37-14 885 0004	9.6392
37-14 885 0008	9.6443
37-14 885 0009	9.6481
37-14 885 0010	9.6395
37-14 885 0012	9.6512
37-14 885 0015	9.6511
37-14 885 0016	9.6456
38.501	4.9398
38.504	4.9851
400 01503	1.6854
400 01503	1.6854
400 10103	1.3656
400 10603	1.2534HDVS
400 10703	1.2540
400 10803	1.4932
400 10903	1.4940
400 11003	1.4939
400 11103	1.4920
400 11203	1.4143HDV
400 11303	1.4144HDV
400 11403	1.3455HDVS
400 11703	1.2549HDVS
400 11903	1.4683MHDV
400 12003	1.4942
400 12403	1.3511HDV
400 12603	1.4456HDV
400 12603	1.4456HDV
400 20903	1.3724
400 21203	1.4689
400 876	9.6078
4002	2.7462
4002	4.9373
4003	2.7472PHT
4004	2.7472PHT
4004	4.8386
4005	2.7476PHT
4005	4.9373
4006	4.8511
4008	4.8511
401 465	9.6317
4013	2.7530/30PHT
40-14 885 0000	9.6303
40-14 885 0001	9.6055
40-14 885 0002	9.6305
40-14 885 0005	9.6088
40-14 885 0006	9.6089
40-14 885 0008	9.6376
40-14 885 0011	9.6520
40-14 885 0012	9.6509
4015	4.9634
4016	2.7476PHT
4018	2.7479PHT
402 05203	1.6854
402 60003	3.7691
402 60303	3.7514RS
402 60403	3.7521RS
402 60503	3.7512RS
402 60703	3.8237
402 60903	3.8112
402 61003	3.7885
402 61103	3.7593
4020	2.7479PHT
4020	4.8386
4021	2.7481PHT
4022	2.7480PHT
4024	2.7530/10PHT
4025	2.7481PHT
4026	2.7481PHT
4027	2.7492PHT
4029	2.7530/1PHT
403 51103	2.8543
403 53803	2.8543
403 53803	2.8543
403 80603	2.7479PHT
403 80703	2.7476PHT
403 80903	2.8169
403 81503	2.7783
403 81603	2.7566PHT
403 81803	2.8078
4032	2.7499
4035	2.7493PHT
4-037-0602-0	3.8716RS
4-037-0650-0	2.8627PHT
4038	2.7498
4039	2.7498
4041	2.7494PHT
4042	2.7508PHT
4044	2.7490PHT
4047	2.7523PHT
4049	2.7524PHT
4050	2.7530/1PHT
4051	2.7494PHT
4052	2.7517PHT
4053	2.7530/3PHT
4054	2.7530/4PHT
4055	2.7527PHT
4056	2.7530/5PHT
4057	2.7530/11PHT
4058	2.7530/1PHT
4058	4.9507
4059	2.7529PHT
4060	2.7530/8PHT
4060	4.9415
4061	4.8815
4063	2.7530/26PHT
4064	2.7530/21PHT
4065	2.7530/27PHT
4066	2.7530/28PHT
4067	2.7530/19PHT
4068	2.7494PHT
4069	2.7530/23PHT
4071	2.7530/18PHT
4072	2.7530/17PHT
4074	2.7530/6PHT
4077	2.7494PHT
408 395	9.6387
4081	4.8347
4086	2.7512PHT
4088	2.7530/7PHT
4089	2.7530/33PHT
409 10015	1.3656
40928108	9.6350
41.500	4.8511
4100	4.8965
4102	4.8725
4113	4.8736
4120	4.9415
413 80403	2.8190
413 80603	2.8204PHT
413 80803	2.7723PHT
413 80903	2.8198PHT
413 81103	2.7573PHT
414 50303	3.7526RS
414 50503	3.8242RS
414 50803	3.8247RS
414 50903	3.7596
414 51003	3.7758
414 51103	3.8255RS

4148	4.9630
4149	4.9007
4150	4.8864
4153	4.8616
4158	4.8616
4159	4.8888
4162	4.9363
4163	4.9506
4167	4.8884
4168	4.9503
4169	4.8573
4173	4.9585
4176	4.9639
4177	4.8700
4178	4.9624
4193	4.9568
4194	4.9568
42.513	4.9345
4201	2.7566PHT
4204	2.7575PHT
4205	4.9575
4206	4.9504
4207	4.9575
4221	2.7573PHT
4222	2.7574PHT
4272	2.7599
4274	2.7593
4276	2.7594
4277	2.7617
4279	2.7592
4284	2.7602
4286	2.7607
4290	2.7630/32
4291	2.7613
4293	2.7622
4295	2.7630/10
4298	2.7630/24
430 00103	0.0856
430 01203	0.0856
430 01303	0.0856
430 01403	0.0856
430 02303	0.0856
430 02403	0.0856
430 02473	0.0856
430 21203	0.0856
430 40603	0.0179/112
430 41003	0.0617
430 50803	0.0323
430 90703	0.0397
430 90903	0.0627
4301	2.7649PHT
4302	2.7641
4303	2.7658PHT
4303	4.8747
4304	2.7658PHT
4304	4.8491
4305	2.7662PHT
4306	2.7665PHT
4309	2.7659PHT
4310	4.8748
4315	2.7654PHT
4316	2.7658PHT
4318	2.7659PHT
4319	2.7662PHT
4320	2.7659PHT
4321	2.7667PHT
4322	2.7665PHT
4323	2.7674PHT
4324	2.7668PHT
4325	2.7667PHT
4326	2.7675PHT
4328	2.7672PHT
4329	2.7669PHT
4330	2.7670
4331	2.7680PHT
4331	4.8674
4332	2.7681PHT
4333	2.7679PHT
4333	4.8494
4334	4.9025
4384	2.7903
4385	2.7988
4391	2.7903
4392	2.7911
4393	2.7957
4396	2.7940
43J83-17001	2.7948
43S85-16001	3.7973
43S85-17001	2.7941
43S86-16001	3.7973
4402	2.7922
4404	4.8839
4405	4.8543
4407	2.7948
4408	2.7941
441 19102	9.6001D
4417	2.7969
44229	4.9345
44248	4.7049
44263	4.9209
44265	4.9411
44278	4.7246
44317	4.7251
44330	4.7230
44331	4.7007
44334	4.7236
44337	4.9385
44338	4.7229
44341	4.7249
44344	4.8605
4451	2.7623
4456	2.7619
4458	2.7963
4461-13301	1.4456HDV
4461-1700	2.7903
4461-2700 B	2.7903
4461-3330 A	1.4456HDV
4461-3330 AY	1.4456HDV
4461-4330 AY	1.4456HDV
4486	4.8539
44A2-13301	1.4456HDV
44A2-16001	3.7952
44A5-13301	1.4456HDV
44AZ-13301	1.4456HDV
44P88-16001	3.7993
44P88-17001	2.7975
44R80-17001	2.7957
44R84-16002	3.7952
44R86-16001	3.7973
44S88-17001	2.7946
45.501	4.9643
4502	2.7783
4519	2.8075
4525	2.8078
4526	2.8083PHT
4533	2.8085PHT
4536	2.7792PHT
4537	2.8094PHT
4538	2.7793PHT
4540	2.8091PHT
4541	2.8099PHT
4542	2.8100PHT
4623	2.8211PHT
4624	2.8169
4627	2.8181
4631	2.8625
4632	2.8186
4634	2.8182
4637	2.8176
4638	2.8190
4640	2.8201PHT
4641	2.7723PHT
4643	2.8201PHT
4646	2.8193
4647	2.7535/1PHT
4649	2.8198PHT
4652	2.8209PHT
4653	2.7716
4654	2.8214PHT
4656	2.8215PHT
4664	2.8303/1
4668	2.8303/1
4673	2.8322/18
4677	2.8322/21
4678	2.8322/31
4713	2.8342
4767	2.8543
48000	9.8114
48001	9.6432
48002	9.6332
48003	9.6374
48004	9.6350
48005	9.6329
48006	9.6299
48007	9.6319
48008	9.6254S
48010	9.8120
48011	9.6408
48013	9.6046
48014	9.6307
48015	9.6331
48019	9.6276
48020	9.6278
48021	9.6035
48023	9.6303
48024	9.6317
48025	9.6068
48028	9.6175
48030	9.6088
48032	9.6308
48033	9.6375
48035	9.6335
48040	9.6336
48041	9.6327
48042	9.6326
48052	9.6245
48054	9.6114
48056	9.6172
48057	9.6040
48058	9.6256
48059	9.6274
48060	9.6096
48061	9.6342
48062	9.6005
48063	9.6380
48064	9.6008
48065	9.6334
48066	9.6055
48067	9.6089
48068	9.6255
48071	9.6376
48072	9.6409
48078	9.6265
48079	9.6070
48082	9.6345
48088	9.6333
48094	9.6098
48098	9.6113
48099	9.6115
48103	9.6286
48104	9.6297
48105	9.6103
48107	9.6361
48108	9.6418
48111	9.6247
48115	9.6078
48121	9.6048
48123	9.6128
48124	9.6383
48127	9.6348
48129	9.6119
48132	9.6006
48135	9.6407
48136	9.6284
48139	9.6457
48140	9.6378
48145	9.6289
48147	9.6507
48149	9.6287
48158	9.6133
48162	9.6389
48165	9.6337
48170	9.6396
48176	9.6294
48179	9.6357
48183	9.6491
48184	9.6366
48188	9.6185S
48201	9.6502
48202	9.6166
48206	9.6375
48216	9.6375
4823	2.8627PHT
48239	9.6443
48245	9.6395
48257	9.6438
48266	9.6422
48269	9.6437
48274	9.6392
48278	9.6358
48287	9.6486
48290	9.6489
48292	9.6429
48293	9.6508
48306	9.6094
48308	9.6026
48337	9.6387
48339	9.6080
48340	9.6069
48341	9.6032
48342	9.6001D
48344	9.6027
48346	9.6092
48348	9.6433
48363	9.6102
48395	9.6436
48397	9.6451
48404	9.6447
48408	9.6499
48410	9.6513
48682	9.6196
49052	9.6456
49054	9.6514
49055	9.6511
49061	9.6532
49062	9.6519
49068	9.6416
49069	9.6427
49073	9.6503
49086	9.6323
49097	9.6509
49099	9.6531
49100	9.6520
49133	9.6449
50 001	1.2547
50 002	1.2529HDV
50 002 V	1.2529HDV
50 004	1.2521
50 012	1.2532HDV
50 012 V	1.2532HDV
50 014	1.2534HDVS
50 014 S	1.2534HDVS
50 014 V	1.2534HDVS
50 016	1.2549HDVS
50 016 S	1.2549HDVS
50 016 V	1.2549HDVS
50 017	1.2540
50 020	1.2534HDVS
50 021	1.2534HDVS
50 026	1.2529HDV
50 027	1.2549HDVS
50 029	1.2534HDVS
50 029 S	1.2534HDVS
50 029 V	1.2534HDVS
50 030	1.2549HDVS
50 030 S	1.2549HDVS

50 031	1.2534HDVS
50 032	1.2549HDVS
50 033	1.2562
50 039	1.2534HDVS
50 039 S	1.2534HDVS
50 040	1.2562
50 045	1.2534HDVS
50 047	1.2562
50 048	1.2549HDVS
50 050	1.2549HDVS
500 959	9.6375
500 961	9.6062S
5011	3.7512RS
5012	3.7518RS
5015	3.7512RS
502 143	9.6507
5020	3.7514RS
5021	3.7514RS
5022	3.7555RS
5023	3.7573/21RS
5026	3.7518RS
5027	3.7521RS
5028	3.7521RS
5029	3.7524RS
5030	3.7523RS
5032	3.7575/1RS
5033	3.7526RS
5034	3.7525RS
5036	3.7556RS
5037	3.7561RS
5039	3.7570RS
5040	3.7527RS
5041	3.7567RS
5047	3.7534RS
5050	3.7573/15RS
5055	3.7573/16RS
5056	3.7560RS
5060	3.7573/12RS
5062	3.7559RS
5065	3.7573/15RS
5069	3.7567RS
5070	3.7573/17RS
5071	3.7573/15RS
5073	3.7573/12RS
5074	3.7549RS
5075	3.7573/12RS
5075	4.9411
5078	3.7573/12RS
5080	3.7573/17RS
5081	3.7573/27RS
5087	3.7573/14RS
5088	3.7573/17RS
5092	3.7573/19RS
50926869	9.6432
5093	3.7573/22RS
50936999	9.6432
5094	3.7573/18RS
51 003	1.3455HDVS
51 003 S	1.3455HDVS
51 003 V	1.3455HDVS
5101	3.7573/40RS
5101	4.9562
5108	3.7573/25RS
5112	3.7573/48RS
5113	3.7573/47RS
5114	3.7573/49RS
514 885 0002	9.6348
514 885 0006	9.6378
52 004	1.3655
52 006	1.3656
52 006 V	1.3656
52 007	1.3661
52 007 V	1.3661
52 013	1.3664
52 014	1.3691/11U
52 016	1.3667
52 025	1.3686
52 037	1.3691/2
52 038	1.3691/3
52 039	1.3691/5
52 043	1.3691/11U
52 044	1.3691/12U
52 045	1.3676
52 048	1.3691/6
52 050	1.3691/22
52 052	1.3691/26
52 053	1.3691/27
5200	3.7593
5201	3.7593RS
5202	3.7595RS
5203	3.7598
5212	3.7590
5213	3.7596
5215	3.7597
5216	3.7600
5247098	3.7575/1RS
5247810	1.2805/1
5248175	2.7479PHT
5267	3.7628
5270	3.7614
5271	3.7614
5277	3.7627
5283	3.7629
5284	3.7630
5285	3.7982
53 003	1.4920
53 003 V	1.4920
53 006	1.4923
53 007	1.4927
53 009	1.4932
53 009 V	1.4932
53 010	1.4939
53 010 V	1.4939
53 011	1.4940
53 011 V	1.4940
53 013	1.4942
53 013 V	1.4942
53 014	1.7271
53 014 V	1.7271
53 019	1.3724
53 021	1.2805/1
53 023	1.3726
5301	3.7691
5302	3.7681
5304	3.7683RS
5307	3.7688
5311	3.7688
5312	3.7688RS
5313	3.7689RS
5315	3.7691
5316	3.7691
5317	3.7694
5318	3.7694
5320	3.7697
5321	3.7699RS
5322	3.7704
5323	3.7701
5355	4.9880
5361	4.9856
5385	3.7952
5388	3.7956
5397	3.7973
54 002	1.3511HDV
54 002 V	1.3511HDV
54 006	1.4456HDV
54 006 V	1.4456HDV
54 014	1.5084
54 020	1.3522HDV
54 026	1.5084
54 400 071	1.4689
54 401 050	3.8122
54 401 291	2.8083PHT
54 401 627	2.8085PHT
54 402 059	2.8078
54 402 069	2.8091PHT
54 402 212	2.8091PHT
54 402 221	1.4689
54 402 689	3.8121
54 403 235	2.8098PHT
54 403 806	2.8094PHT
54 403 880	2.8093PHT
54 403 899	3.8125
54 404 052	3.8126RS
54 404 224	3.8124RS
54 404 506	2.8096PHT
54 404 778	3.8127RS
54 405 507	3.8126RS
54 405 729	3.8128RS
54 405 782	2.8099PHT
54 405 821	8.4702*N
54 406 537	2.8100PHT
54 407 831	2.8104
54 408 133	2.8105
54 408 776	2.8106
54 413 568	1.4683MHDV
54 414 513	2.8070
54 414 514	2.8075
54 417 214	2.8075
54 418 661	2.8091PHT
54 419 082	3.8114
54 419 946	1.4683MHDV
54 420 877	3.7885
54 420 889	2.7783
54 420 904	3.7590
54 421 149	3.8114
54 422 043	3.8114
54 422 044	3.8114
54 422 803	3.8112
54 423 546	2.8078
54 424 762	3.8122
54 427 109	2.8078
54 527 109	2.8078
54 987 086	9.4036
5400	3.7969
5402	3.7966
5403	3.7981
5406	3.7994
5407	4.9363
55 005	1.4683MHDV
55 005 V	1.4683MHDV
55 006 V	1.4143HDV
55 007 V	1.4144HDV
55 008	1.4683MHDV
55 008 V	1.4683MHDV
55 013 V	1.4689
5501	3.8106
5502	3.7885
5505	3.8112
5506	3.8121
5509	3.8129RS
5517	3.8107
5527	3.8124RS
5529	3.8126RS
5530	3.8125
5531	3.7892
5532	3.8128RS
56 009	1.5945
561 811 68	0.0617
561 811 76	0.0617
561 811 82	0.0627
561 811 83	0.0628
561 812 02	0.0617
561 812 03	0.0617
5618	3.8229
5619	3.8255RS
5622	3.8259
5623	3.8260
5628	3.8237
5629	3.8254RS
5633	3.8236RS
5634	3.8236RS
5635	3.8242RS
5636	3.8242RS
5637	3.8241
5638	3.8242RS
5639	3.8714RS
5640	3.7758
5641	3.8247RS
5645	3.8255RS
5651	3.8251RS
5652	3.8260
5663	3.8323
5665	3.8323
5672	3.8331/13
5673	3.8331/10
5676	3.8331/19
57 006	1.6854
5723	3.7514RS
5724	3.7514RS
581700540000	9.8003
581700540010	9.8003
581701070000	9.4020
5823	3.8716RS
5DA 006 623-951	9.8114
5DA 193 175-061	9.6214
5DA 193 175-331	9.6350
5DA 193 175-341	9.6046
5DA 193 175-391	9.6496
5DA 193 175-401	9.6035
5DA 193 175-411	9.6432
5DA 193 175-421	9.6088
5DA 193 175-431	9.6303
5DA 193 175-441	9.6305
5DA 193 175-481	9.6443
5DA 193 175-491	9.6507
5DA 193 175-501	9.6374
5DA 193 175-511	9.6395
5DA 193 175-591	9.6333
5DA 193 175-681	9.6457
5DA 193 175-691	9.6068
5DA 193 175-701	9.6336
5DA 193 175-711	9.6507
5DA 193 175-731	9.6307
5DA 193 175-741	9.6284
5DA 193 175-761	9.6342
5DA 193 175-781	9.6380
5DA 193 175-791	9.6381
5DA 193 175-801	9.6378
5DA 193 175-821	9.6319
5DA 193 175-831	9.6418
5DA 193 175-881	9.6175
5DA 193 175-901	9.6331
5DA 193 175-911	9.6329
5DA 193 175-921	9.6326
5DA 193 175-931	9.6359
5DA 193 175-951	9.6499
5DA 193 175-961	9.6512
5DA 193 175-971	9.6514
5DA 193 175-981	9.6345
5DA 193 175-991	9.6317
5DA 230 035-041	9.6128
5DA 230 035-561	9.6366
5DA 230 035-731	9.6329
5DA 230 035-781	9.6333
5DA 230 035-861	9.6336
5DA 230 035-901	9.6358
5DA 230 036-001	9.6325
5DA 230 036-101	9.6452
5DA 230 036-191	9.6422
5DA 230 036-311	9.6456
5DA 230 036-371	9.6503
5DA 230 036-511	9.6511
5DA 230 036-521	9.6416
5DA 230 036-541	9.6451
5DA 230 036-611	9.6427
5DA 230 036-661	9.6523
5DA 358 000-001	9.6335
5DA 358 000-011	9.6070
5DA 358 000-041	9.6408
5DA 358 000-051	9.6254S
5DA 358 000-061	9.6128
5DA 358 000-071	9.6348
5DA 358 000-091	9.6429
5DA 358 000-131	9.6503
5DA 358 000-141	9.6114
5DA 358 000-171	9.8120

5DA 358 000-251	***9.6265***
5DA 358 000-271	***9.6323***
5DA 358 000-291	***9.6172***
5DA 358 000-311	***9.6383***
5DA 358 000-331	***9.6407***
5DA 358 000-341	***9.6447***
5DA 358 000-371	***9.6325***
5DA 358 000-381	***9.6366***
5DA 358 000-411	***9.6332***
5DA 358 000-461	***9.6436***
5DA 358 000-471	***9.6375***
5DA 358 000-491	***9.6245***
5DA 358 000-571	***9.6396***
5DA 358 000-581	***9.6418***
5DA 358 000-631	***9.6327***
5DA 358 000-651	***9.6389***
5DA 358 000-661	***9.6491***
5DA 358 000-671	***9.6387***
5DA 358 000-711	***9.8114***
5DA 358 000-831	***9.6008***
5DA 358 000-841	***9.6055***
5DA 358 000-861	***9.6241***
5DA 358 000-871	***9.6299***
5DA 358 000-891	***9.6308***
5DA 358 000-911	***9.6078***
5DA 358 000-931	***9.6334***
5DA 358 000-991	***9.6422***
5DA 358 057-021	***9.6416***
5DA 358 057-131	***9.6098***
5DA 358 057-231	***9.6508***
5DA 358 057-261	***9.6337***
5DA 358 057-321	***9.6511***
5DA 358 057-381	***9.6502***
5DA 358 057-401	***9.6437***
5DA 358 057-441	***9.6456***
5DA 358 057-451	***9.6438***
5DA 358 057-481	***9.6414***
5DA 358 057-491	***9.6392***
5DA 358 057-541	***9.6397***
5DA 358 057-591	***9.6527***
5DA 358 057-601	***9.6427***
5DA 358 057-661	***9.6451***
5DA 358 057-691	***9.6433***
5DA 358 057-811	***9.6405***
5DA 358 057-821	***9.6511***
5DA 358 057-921	***9.6531***
5DA 358 057-931	***9.6509***
5DA 358 057-941	***9.6489***
5DA 358 168-041	***9.6532***
5DA 358 168-131	***9.6403***
5DA 358 168-181	***9.6449***
5DA 358 168-341	***9.6522***
5DA 358 168-391	***9.6526***
5DA 749 475-101	***9.6255***
5DA 749 475-131	***9.6297***
5DA 749 475-261	***9.6286***
5DA 749 475-601	***9.6376***
5DA 749 475-661	***9.6432***
5DA 749 475-781	***9.6332***
5DA 749 475-851	***9.6375***
5DA 749 475-891	***9.6361***
5DA 749 475-901	***9.6366***
5WK 6105	***9.4004***
5WK 90611	***9.6172***
5WK 9397	***9.6445***
5WK 9397	***9.6445***
5WK9 3171	***9.6408***
60 410 049	***1.4144HDV***
60 410 050	***1.4143HDV***
600 567	***9.6366***
600 630	***9.6046***
600 650	***9.6361***
6005	***0.0130***
6020	***4.7006***
6022	***4.9509***
606 900 03	***9.6001D***
607 029 02	***9.6003***
607 029 03	***9.6003***
607 054 04	***9.6048***
607 054 09	***9.6128***
607 056 01	***9.6002***
607 056 04	***9.6008***
607 056 06	***9.6058***
607 057 01	***9.6006***
607 057 38	***9.6006***
607 080 38	***9.6046***
607 081 38	***9.6175***
607 081 54	***9.6176***
607 120 02	***9.6001D***
60921666	***9.6332***
610 453 24	***8.4977/1**N***
610 800 24	***8.4961/1**N***
6100	***0.0179/96***
6102	***0.0179/95***
6102	***4.9711***
611 100 41	***8.4976M**N***
611 100 55	***8.4976M**N***
611 100 62	***8.4976M**N***
611 100 66	***8.4976M**N***
611 100 76	***8.4976M**N***
611 101 03	***8.4980M**N***
611 101 26	***8.4980M**N***
6115	***0.0179/112***
6128	***0.0179/157***
614 885 0003	***9.6172***
614 885 0004	***9.6408***
614 885 0006	***9.6299***
614 885 0007	***9.6350***
614 885 0017	***9.6407***
614 885 0022	***9.6447***
6209	***4.7239***
623 901	***9.6532***
623 903	***9.6416***
623 904	***9.6514***
623 905	***9.6359***
623 906	***9.6245***
623 907	***9.6437***
623 908	***9.6436***
6257	***4.9529***
6258	***4.9730***
62937080	***9.6308***
6301	***4.7241***
6302	***4.7236***
6303	***0.0323***
6304	***0.0323***
6304	***4.7059***
6305	***0.0323***
6308	***0.0334***
6310	***0.0334***
6311	***0.0334***
6317	***0.0339***
6431	***4.8372***
6462	***4.7061***
6467	***4.8372***
6468	***4.7064***
6469	***4.7064***
648 250 72	***9.8003***
648 330 20	***9.4005***
648 330 40	***9.4020***
6522	***4.9138***
6625	***0.0617***
6626	***0.0397***
6628	***0.0617***
6629	***0.0628***
6630	***0.0627***
6764	***0.0856***
6794	***4.9681***
6812	***4.8608***
6980	***4.8507***
7 350 260 2	***9.4029***
7 350 370 2	***9.4005***
7 350 370 2	***9.4005***
700 055 01	***2.8159***
700 121	***9.6096***
700 123	***9.6496***
700 221	***9.6265***
700 471	***9.6319***
701 049	***9.6418***
701 184 01	***1.4923***
701 403	***9.6303***
701 724	***9.6389***
701 857	***9.6513***
701 895 01	***3.8229***
701 918	***9.6452***
703 880 03	***3.8241***
705 197 01	***1.4927***
710 067 01	***1.4920***
710 070 01	***1.4923***
710 595 01	***1.4927***
710 596 01	***1.4927***
710 613 03	***2.8181***
710 615 01	***3.8236RS***
710 638 01	***2.8169***
710 640 01	***3.8237***
710 640 02	***3.8237***
710 650 01	***1.4932***
710 851 01	***2.8176***
710 861 01	***3.8237RS***
710 930 01	***3.8237RS***
710 930 02	***3.8237RS***
710 930 03	***3.8254RS***
7103	***4.8623***
7109	***4.9343***
711 016 07	***3.8251RS***
711 116 01	***1.4939***
711 116 02	***1.4939***
711 116 03	***1.4939***
711 185 01	***1.4940***
711 195 01	***3.8236RS***
711 195 02	***3.8236RS***
711 195 03	***3.8242RS***
711 195 04	***3.8236RS***
711 195 05	***3.8242RS***
711 214 01	***3.8237***
711 215 01	***3.8237RS***
711 215 02	***3.8237RS***
711 275 01	***2.8181***
711 290 01	***2.8182***
711 299 01	***3.8236RS***
711 323 01	***3.8237***
711 424 01	***3.8236RS***
711 424 02	***3.8242RS***
711 476 01	***1.4943***
711 539 01	***3.8237RS***
711 711 01	***2.8186***
711 713 01	***3.8240***
711 743 01	***2.8190***
711 975 01	***1.4942***
711 975 02	***1.4942***
711 980 01	***1.4939***
711 985 01	***1.4940***
711 985 02	***1.4932***
711.005.300	***1.1806***
711.101.300	***1.1805***
7116	***4.8432***
7119	***4.8612***
712 155 01	***2.8193***
712 160 01	***8.4961/1***
712 160 03	***8.4963/1***
712 279 01	***3.8242RS***
712 372 01	***3.8247RS***
712 372 02	***3.8257RS***
712 378 01	***3.8247RS***
712 437 01	***2.8198PHT***
712 437 02	***2.8198PHT***
712 437 04	***2.8198PHT***
712 437 05	***2.8198PHT***
712 461 04	***2.8201PHT***
712 461 05	***2.8201PHT***
712 461 06	***2.8201PHT***
712 461 07	***2.8204PHT***
712 462 03	***2.8201PHT***
712 478 02	***1.4946M***
712 753 01	***3.8255RS***
712 779 02	***1.4946M***
712 779 03	***1.4946M***
712 779 05	***1.4949M***
712 934 02	***1.4948M***
7121	***4.8612***
713 027 01	***2.8209PHT***
713 053 01	***3.8260***
713 198 01	***8.4961/1***
713 198 04	***8.4963/1***
713 269 01	***8.4977/1***
713 277 01	***8.4980M***
713 284 01	***8.4976M***
713 473 01	***8.4976M***
713 474 01	***8.4980M***
713 491 01	***8.4976M***
713 524 01	***3.8258***
713 528 01	***2.8210PHT***
713 584 01	***2.8211PHT***
713 667 01	***2.8201PHT***
713 667 02	***2.8201PHT***
713 668 01	***2.8198PHT***
713 668 02	***2.8198PHT***
713 713 01	***3.8260***
713 756 01	***2.8216PHT***
713 774 02	***3.8257RS***
71351702	***3.8259***
71374201	***2.8216PHT***
71376201	***2.8198PHT***
714 885 0001	***9.6381***
714 885 0002	***9.6380***
714 885 0005	***9.6035***
714 885 0011	***9.6432***
714 885 0013	***9.6519***
714 885 0014	***9.6523***
7151	***4.9760***
7155	***4.9654***
7171	***4.8888***
7171	***4.9278***
7172	***4.9401***
7175	***4.9446***
718 097 01	***1.4926***
718 098 01	***1.4896***
720 311	***9.6055***
720 313	***9.6088***
7200	***4.7244***
7201	***4.8716***
7209	***4.9504***
721 404	***9.6308***
721 501	***4.8780***
721 906	***9.6307***
721 907	***9.6376***
7210	***4.9686***
722 637	***9.6383***
723 459	***9.6397***
7237	***4.9278***
7240	***4.8768***
7246	***4.8493***
7247	***4.8725***
7251	***4.8808***
7255	***4.8386***
7260	***4.8398***
7262	***4.8429***
7263	***4.9305***
7264	***4.8398***
7266	***4.8692***
7267	***4.8471***
7270	***4.8815***
7272	***4.8386***
7273	***4.8650***
7274	***4.8471***
7275	***4.8507***
7275	***4.8674***
7276	***4.8471***
7282	***4.8354***
7285	***4.8808***
7285	***4.9025***
7287	***4.8386***
7296	***4.8386***
7297	***4.8354***
735 02 602	***9.4029***
735 03 702	***9.4005***
7371	***4.8780***

7401	***9.6001D***	85.30091	***9.6035***	85.30255A2	***9.6378***	85.30644A2	***9.6545***
7412	***4.7111***	85.30092	***9.6040***	85.30256	***9.6326***	8530133	***9.6375***
7414	***4.9401***	85.30093	***9.6005***	85.30256A2	***9.6326***	8530154	***9.6375***
7418	***4.9619***	85.30095	***9.6089***	85.30262	***9.6098***	8530164	***9.6332***
7419	***4.9984***	85.30096	***9.6088***	85.30267	***9.6491***	8530165	***9.6374***
7420	***4.9492***	85.30097	***9.6068***	85.30268	***9.6350***	8530171	***9.6329***
7421	***4.9585***	85.30097A2	***9.6068***	85.30268A2	***9.6350***	8530184	***9.6308***
7700	***4.9753***	85.30106	***9.8114***	85.30277	***9.6289***	8530249	***9.6375***
7801100	***9.6332***	85.30109	***9.6299***	85.30278	***9.6395***	8530251	***9.6375***
7802200	***9.6359***	85.30109A2	***9.6299***	85.30284	***9.6196***	8530268	***9.6350***
7802207	***9.6361***	85.30110	***9.6335***	85.30285	***9.6103***	8530302	***9.6432***
7803300	***9.6432***	85.30117	***9.6092***	85.30286	***9.6166***	8530304	***9.6361***
78100	***9.6332***	85.30119	***9.6396***	85.30302	***9.6432***	8610	***4.9711***
78207	***9.6361***	85.30121	***9.6114***	85.30303	***9.6383***	8655	***4.9699***
78300	***9.6432***	85.30123	***9.6172***	85.30303A2	***9.6383***	8735	***4.9278***
8 204 45	***3.7590***	85.30123A2	***9.6172***	85.30304	***9.6361***	8839	***4.9740***
8010300	***9.6332***	85.30126	***9.6255***	85.30305	***9.6366***	9 011 4106	***0.0179/112***
8010318	***9.6432***	85.30127	***9.6256***	85.30306	***9.6443***	9 220 332 702	***9.6001D***
8010328	***9.6329***	85.30127A2	***9.6256***	85.30306A2	***9.6443***	9 230 087 016	***8.2653**N***
8010351	***9.6375***	85.30128	***9.6274***	85.30308	***9.6358***	9 230 087 019	***8.2653**N***
8010391	***9.6308***	85.30133	***9.6375***	85.30308A2	***9.6358***	9 230 087 030	***8.2653**N***
8010444	***9.6361***	85.30135	***9.6380***	85.30310A2	***9.6449***	9 230 087 036	***8.2653**N***
8010478	***9.6374***	85.30135A2	***9.6380***	85.30320	***9.6297***	9 230 087 038	***8.2653**N***
8010480	***9.6350***	85.30144	***9.6319***	85.30341	***9.6102***	9 230 087 039	***8.2653**N***
8010530	***9.6375***	85.30144A2	***9.6319***	85.30343	***9.6429***	9 230 087 044	***8.2653**N***
8010551	***9.6308***	85.30145	***9.6345***	85.30344	***9.6508***	9 230 087 046	***8.2653**N***
8010564	***9.6375***	85.30145A2	***9.6345***	85.30349	***9.6185S***	9 230 087 056	***8.2653**N***
8010628	***9.6432***	85.30149	***9.6214***	85.30349A2	***9.6185S***	9 230 087 062	***8.2653**N***
8101	***4.9677***	85.30154	***9.6375***	85.30351	***9.6165***	9 230 087 065	***8.2653**N***
8106	***4.7120***	85.30160	***9.6348***	85.30352	***9.6222***	9 231 064 336	***3.7573/31***
81932056	***9.6361***	85.30160A2	***9.6348***	85.30355A2	***9.6357***	9 231 064 346	***3.7573/31***
820 768	***9.6481***	85.30161	***9.6389***	85.30360	***9.6456***	9 231 065 501	***2.7512PHT***
820 773	***9.6486***	85.30161A2	***9.6389***	85.30366	***9.6499***	9 231 065 502	***2.7472PHT***
820 774	***9.6485***	85.30164	***9.6332***	85.30373	***9.6387***	9 231 065 503	***2.7472PHT***
820 780	***9.6396***	85.30164A2	***9.6332***	85.30373A2	***9.6387***	9 231 065 504	***2.7472PHT***
8208	***4.8615***	85.30165	***9.6374***	85.30386	***9.6438***	9 231 065 506	***2.7512PHT***
821 429	***9.6395***	85.30168	***9.6327***	85.30392	***9.6392***	9 231 065 516	***2.7512PHT***
821 495	***9.6456***	85.30168A2	***9.6327***	85.30405	***9.6447***	9 231 065 529	***2.7530/14PHT***
821 669	***9.6443***	85.30171	***9.6329***	85.30405AS	***9.6447***	9 231 067 027	***1.2534HDVS***
821 670	***9.6511***	85.30171A2	***9.6329***	85.30408	***9.6436***	9 231 081 319	***2.7498***
821 719	***9.6512***	85.30175	***9.6287***	85.30412	***9.6514***	9 231 081 413	***2.7498***
8275	***4.9731***	85.30176	***9.6297***	85.30412A2	***9.6514***	9 231 081 628	***3.7545RS***
8300	***4.7120***	85.30180A2	***9.6418***	85.30413	***9.6511***	9 231 081 678	***2.7498***
8458	***4.9531***	85.30182	***9.6303***	85.30421	***9.6433***	9 231 086 370	***2.7494PHT***
8471	***4.8674***	85.30182A2	***9.6303***	85.30423	***9.6452***	9 231 087 552	***8.2660***
8474	***4.9702***	85.30183A2	***9.6284***	85.30425	***9.6405***	9 231 087 677	***3.7573/21RS***
8480	***4.8494***	85.30184	***9.6308***	85.30426	***9.6397***	9 231 140 245	***2.7479PHT***
8492	***4.7061***	85.30184A2	***9.6308***	85.30447	***9.6432***	9 231 335 584	***2.7729***
85.30008	***9.6294***	85.30186	***9.6408***	85.30456	***9.6513***	9 231 337 005	***1.3724***
85.30017	***9.6119***	85.30186A2	***9.6408***	85.30456A2	***9.6513***	9 231 337 005	***1.3724***
85.30021	***9.6489***	85.30187	***9.6307***	85.30459	***9.6479***	9 231 337 005 706	***1.3724***
85.30029	***9.6331***	85.30187A2	***9.6307***	85.30459S	***9.6479***	9 231 337 005 706	***1.3724***
85.30029A2	***9.6331***	85.30190	***9.6323***	85.30461	***9.6451***	9 231 337 041	***1.4932***
85.30032	***9.6008***	85.30190A2	***9.6323***	85.30485	***9.6422***	9 231 337 041	***1.4932***
85.30032A2	***9.6008***	85.30194	***9.6334***	85.30489	***9.6437***	9 231 337 072	***1.3724***
85.30034	***9.6245***	85.30194A2	***9.6334***	85.30490	***9.6403***	9 231 337 072	***1.3724***
85.30034A2	***9.6245***	85.30195	***9.6337***	85.30494	***9.6287***	9 231 337 072 706	***1.3724***
85.30035	***9.6006***	85.30196	***9.6333***	85.30525	***9.6427***	9 231 337 072 706	***1.3724***
85.30036	***9.6046***	85.30197	***9.6325***	85.30526	***9.6503***	9 231 337 074	***1.3726***
85.30036A2	***9.6046***	85.30207	***9.6409***	85.30526A2	***9.6503***	9 231 337 074	***1.3726***
85.30037	***9.6096***	85.30212	***9.6502***	85.30529	***9.6509***	9 232 081 442	***2.7494PHT***
85.30038	***9.6055***	85.30212A2	***9.6502***	85.30529A2	***9.6509***	9 232 337 354	***0.0397***
85.30040	***9.6048***	85.30214	***9.6457***	85.30532	***9.6532***	9 232 337 354	***0.0397***
85.30042	***9.6128***	85.30214A2	***9.6457***	85.30532A2	***9.6532***	9 232 337 354 706	***0.0397***
85.30045	***9.6342***	85.30217	***9.6070***	85.30536	***9.6519***	9 232 337 354 706	***0.0397***
85.30045A2	***9.6342***	85.30218	***9.6247***	85.30536A2	***9.6519***	9 233 335 511	***2.7714***
85.30057	***9.6265***	85.30228A2	***9.6359***	85.30538A2	***9.6381***	9 233 335 511	***2.7714***
85.30057A2	***9.6265***	85.30234	***9.6012***	85.30539	***9.6520***	9 233 335 551	***2.7723PHT***
85.30058	***9.6496***	85.30235	***9.6078***	85.30539A2	***9.6520***	9 307 913	***1.3455HDVS***
85.30058A2	***9.6496***	85.30236	***9.6078***	85.30541	***9.6531***	9 460 4446	***2.7498***
85.30059	***9.6276***	85.30237	***9.6079***	85.30573A2	***9.6527***	9 575 2	***1.3664***
85.30060	***9.6278***	85.30243	***9.6407***	85.30578	***9.6523***	90 034	***1.2534HDVS***
85.30062	***9.8120***	85.30243A2	***9.6407***	85.30578A2	***9.6523***	90 069	***3.7514RS***
85.30062A2	***9.8120***	85.30245A2	***9.6298***	85.30581	***9.6538***	90 246 G	***2.7479PHT***
85.30072	***9.6336***	85.30249	***9.6375***	85.30582	***9.6526***	92 500	***1.2540***
85.30072A2	***9.6336***	85.30251	***9.6375***	85.30582A2	***9.6526***	92 500 X	***1.2540***
85.30088	***9.6254S***	85.30252	***9.6507***	85.30586	***9.6522***	92 504	***1.2534HDVS***
85.30090	***9.6317***	85.30252A2	***9.6507***	85.30592	***9.6547***	92 504 B	***1.2534HDVS***
85.30090A2	***9.6317***	85.30255	***9.6378***	85.30592A2	***9.6547***	92 712 E	***1.2549HDVS***

9262	4.9451
940038500010	9.4004
941044110501	4.8716
941085180570	4.8494
941094040575	4.8432
941094060576	4.8507
941095100582	4.9451
941095130583	4.8616
941095680607	4.8615
941095700609	4.8694
941095780616	4.8616
941095790617	4.9363
941095800618	4.9503
941095870625	4.8888
941095910629	4.9504
941095980634	4.9505
941125070664	4.8509
941125120666	4.9237
941125180672	4.8514
941125190673	4.8634
941125310683	4.8688
941125360686	4.9531
941125380688	4.9529
941135120700	4.8780
941135130701	4.9025
941135160703	4.8674
941215240807	4.7059
941285030866	4.9278
941285120871	4.9753
941315020889	4.9711
941318111002	4.7244
941318111140	4.9529
941318111161	4.9451
941318111274	4.9209
941318111287	4.9681
941318111313	4.7013
941318111315	4.7230
941318111320	4.7245
941365030926	4.9680
94220291	3.7627
94238982	3.7627
949033	2.7508PHT
949034	2.7521PHT
949035	2.7716
949041	2.7573PHT
949042	3.7596
9616	4.9209
983 347	1.2568
9856	4.9745
9985	4.8608
ADH 2	2.7530/14PHT
ADH 5006	2.7462
ADH 5007	2.7472PHT
ADH 5013	2.7903
ADH 5016	2.7903
ADH 5025	2.8070
ADH 5027	2.8075
ADH 5032	2.7903
ADH 5043	2.7479PHT
ADH 5071	2.8322/31
ADP 1	1.4683MHDV
ADP 12	1.4143HDV
ADP 92	1.4683MHDV
ADP 5002	1.2529HDV
ADP 5007	1.4456HDV
ADP 5009	1.3511HDV
ADP 5010	1.2532HDV
ADP 5011	1.2529HDV
ADP 5018	1.4144HDV
ADP 5019	1.2549HDVS
ADP 5020	1.2534HDVS
ADP 5021	1.2534HDVS
ADP 5032	1.2534HDVS
ADP 5033	1.2549HDVS
ADP 5034	1.3511HDV
ADR 3	3.7573/31
ADR 71	3.8106
ADR 76	3.8107
ADR 5004	3.7590
ADR 5008	3.7514RS
ADR 5031	3.7614
ADR 5050	3.7985
ADR 5052	3.8331/19
ADT31477	9.6361
AEI 600 C	9.8003
AEI 600 F	9.8003
ATA 1722	9.6001D
ATA 00115	9.6001D
B 3	2.7512PHT
B 11	2.7524PHT
B 12	2.7530/1PHT
B 13	2.7529PHT
B 13K	2.7530/36PHT
B 14	2.7517PHT
B 15	2.7530/4PHT
B 16	2.7530/5PHT
B 17	2.7527PHT
B 18	2.7530/10PHT
B 19	2.7530/11PHT
B 20	2.7530/7PHT
B 21K	2.7530/1PHT*A
B 22	2.7530/8PHT
B 23	2.7530/6PHT
B 24	2.7494PHT
B 38	2.7462
B 38 P	2.7476PHT
B 39	2.7472PHT
B 53	2.7472PHT
B 54	2.7476PHT
B 54 A	2.7479PHT
B 54 G	2.7494PHT
B 64	3.7518RS
B 70	3.7512RS
B 73	3.7518RS
B 75	3.7512RS
B 76	3.7514RS
B 76 A	3.7514RS
B 81	3.7518RS
B 82	3.7521RS
B 84	3.7524RS
B 84/1	3.7560RS
B 87	3.7525RS
B 87/1	3.7561RS
B 88	3.7526RS
B 88/1	3.7556RS
B 89	3.7567RS
B 89/1	3.7567RS
B 91/1	3.7573/12RS
B 93	3.7534RS
B 93/1	3.7573/12RS
B 97	3.7527RS
B 98	3.7573/15RS
B 99	3.7523RS
B 99/1	3.7549RS
B 100	3.7555RS
B 100/1	3.7555RS
B 1009/1	3.7573/27RS
B 101	2.7479PHT
B 103	2.7481PHT
B 105	2.7481PHT
B 106	2.7480PHT
B 107	2.7481PHT
B 109	2.7481PHT
B 110	2.7481PHT
B 112	2.7492PHT
B 113	2.7493PHT
B 116	2.7492PHT
B 117	2.7499
B 119	2.7498
B 121	2.7508PHT
B 122	2.7523PHT
B 124	2.7490PHT
B 125	2.7530/3PHT
B 955	3.7573/16RS
B 955/1	3.7559RS
B 958/1	3.7573/15RS
B 963	3.7573/17RS
B 964	3.7573/15RS
B 965/1	3.7573/12RS
B 967/1	3.7573/12RS
B 968/5	3.7573/17RS
B 969/1	3.7573/22RS
B 971/5	3.7573/17RS
B 972/5	3.7573/17RS
B 974/1	3.7573/22RS
B 975/5	3.7573/14RS
B 1000/5	3.7545RS
B 1001/1	3.7570RS
B 1003/1	3.7573/21RS
B 1005/1	3.7573/19RS
B 1008/1	3.7573/18RS
B 1009/1	3.7573/27RS
BAE 209 B	9.6003
BAE 209 C	9.6003
BAE 403 C	9.6342
BAE 504 B	9.6007
BAE 504 D	9.6048
BAE 504 L	9.6128
BAE 506	9.6008
BAE 506 A	9.6002
BAE 506 D	9.6008
BAE 506 F	9.6058
BAE 507 AK	9.6006
BAE 680 C	9.6432
BAE 680 D	9.6212
BAE 800 AK	9.6046
BAE 800 B	9.6046
BAE 800 B	9.6046
BAE 800 DK	9.6046
BAE 800 EK	9.6096
BAE 801 AK	9.6175
BAE 801 BK	9.6176
BAE 801 EK	9.6096
BAE 920 A	9.6245
BAE 920 A	9.6245
BAE 920 AX	9.6245
BAE 920 AX	9.6245
BAE 940 A	9.6323
BAE 940 A	9.6323
BAE403C245	9.6342
BAE409A245	9.6332
BAE800B245	9.6046
BAE851AE245	9.8114
BE 200 B	9.6001D
BK 3 A	9.6001D
BKL 2 A	9.4005
BKL 4 A	9.4020
BO100	9.6332
BO207	9.6361
BO300	9.6432
CE 22 B	0.0617
CE 22 C	0.0617
CE 39 A	0.0617
CE 39 G	0.0617
CE 39 P	0.0627
CE 39 R	0.0628
CE10000	9.6299
CE20009-12B1	9.6350
CE20014-12B1	9.6332
CE20042-12B1	9.6432
CE20044-12B1	9.6432
CM11-108	9.6508
CM11-109	9.6429
CM11-111	9.6508
CM11-112	9.6429
CM11-116	9.6503
CM11-118	9.6427
CM11-201	9.6345
CM11-202	9.6284
CM11-207A	9.6357
CM12-100	9.6165
CM1T-205	9.6119
CM1T-209B	9.6116
CM1T-217	9.6116
CM1T-228	9.6247
CM1T-228 A	9.6247
CM1T-228 B	9.6247
CM1T-228 C	9.6247
D 485	2.7649PHT
D 487	2.7641
D 489	2.7658PHT
D 490	2.7658PHT
D 492	3.7691
D 494	3.7681
D 495	3.7683RS
D 498	3.7688
D 498 A	3.7688RS
D 499	3.7688
D 499 A	3.7688RS
D 500	2.7658PHT
D 553 A	3.7683RS
D 554 A	3.7689RS
D 556	3.7694
D 556 A	3.7694
D 558	3.7697
D 559/1	3.7699RS
D 560/1	3.7704
D 751	2.7659PHT
D 752	2.7658PHT
D 753	2.7659PHT
D 756	2.7658PHT
D 758	2.7658PHT
D 759	2.7662PHT
D 760	2.7659PHT
D 761	2.7668PHT
D 762	2.7667PHT
D 763	2.7665PHT
D 764	2.7669PHT
D 765	2.7674PHT
D 766	2.7675PHT
D 767	2.7654PHT
D-107 P	1.4927
D-107P	1.4927
D-1957	9.4025
D-1958	9.4025
D-1961	9.4025
D-340	2.7573PHT
D-436	3.7597
D-444	3.7598
DG 435	9.6035
DG 438	9.6189
DG 440	9.6070
DG 449	9.6212
DG 458	9.6199S
DG 459	9.6189
DG 460	9.6212
DG 461	9.6212
DGE-446	9.6189
DGE-447	9.6133
DGE-456	9.6070
DH 390	2.7792PHT
DH 390B	2.7792PHT
DH 390E	2.7792PHT
DH 433	2.7793PHT
DH 434	2.7793PHT
DH 444	2.8322/21
DHE 411	2.7792PHT
DHE 439	2.8322/22
DHE 440	2.8322/25
DHE 441	2.8322/21
DHE 448	2.8322/37
DIC-0100	9.6361
DIC-0102	9.6366
DIC-0103	9.6436
DIC-0111	9.6489
DIC-0115	9.6486
DIC-0116	9.6119
DIC-0134	9.6358
DIC-0143	9.6422
DIC-0144	9.6357
DIC-0200	9.8114
DIC-0207	9.6511
DIC-0209	9.6514
DIS4-05	9.4051
DIS4-08	9.4072
DN 192	1.4456HDV

DN 222	0.0323
DN 428	3.7514RS
DR 22	3.7525RS
DR 195	1.3656
DR 214	2.7566PHT
DR 217	2.7573PHT
DR 218	2.7574PHT
DR 220A	3.7885
DR 226	3.7590
DR 239	3.7593
DR 240	3.7595RS
DR 241	3.7596
DR 242 A	3.7595RS
DR 243	3.7597
DR 244	3.7600
DR 375A	3.7892
DRE 90	3.7885
DRE 381	3.7973
DRE 383	3.8331/8
DRE 385	3.8331/13
DRE 388	3.8331/8
DRE 389	3.8331/37
DRE 389 A	3.8331/37
DRE 390	3.8331/31
DRE 390 A	3.8331/31
DRE 391	3.8331/33
DRE 394	3.8331/32
DRE 395	3.8331/34
DT 453 AX	8.4977/1*N
DT 458 BX	8.4982*N
EDC 62	0.0323
EDC 173	0.0323
EDG 27	9.6069
EDG 43	9.6035
EDH 8	2.8070
EDH 10	2.8075
EDH 10D	2.8075
EDH 12	2.7783
EDH 12 D	2.7783
EDH 12 S	2.7783
EDH 16	2.7783
EDH 24	2.7479PHT
EDH 24 D	2.7479PHT
EDH 25	2.7476PHT
EDH 25 D	2.7476PHT
EDH 26	2.7472PHT
EDH 27	2.7472PHT
EDH 279	2.7530/23PHT
EDH 28	2.7481PHT
EDH 30	2.7462
EDH 31	2.7472PHT
EDH 36	2.7479PHT
EDH 38	2.7481PHT
EDH 42	2.7481PHT
EDH 67	2.7476PHT
EDH 75	2.7481PHT
EDH 88	2.7481PHT
EDH 93	2.8169
EDH 95	2.8169
EDH 117	2.7481PHT
EDH 125	2.7509PHT
EDH 128	2.8083PHT
EDH 130	2.7479PHT
EDH 142	2.8169
EDH 170	2.8198PHT
EDH 183	2.7530/5PHT
EDH 189	2.8322/9
EDH 196	2.8198PHT
EDH 199	2.8096PHT
EDH 201	2.8198PHT
EDH 208	2.8198PHT
EDH 216	2.8094PHT
EDH 226	2.8198PHT
EDH 390	2.7792PHT
EDP 1	1.4143HDV
EDP 1 D	1.4143HDV
EDP 2	1.4144HDV
EDP 2 D	1.4144HDV
EDP 3	1.4683MHDV
EDP 3 D	1.4683MHDV
EDP 19	1.2521
EDP 36	1.2534HDVS
EDP 36 D	1.2534HDVS
EDP 38	1.2549HDVS
EDP 38 D	1.2549HDVS
EDP 50	1.2534HDVS
EDP 51	1.4683MHDV
EDP 59	1.4456HDV
EDP 60	1.3656
EDP 75	1.2534HDVS
EDP 103	1.5084
EDP 109	1.4689
EDP 131	1.2549HDVS
EDP 137	1.2534HDVS
EDP 198	1.2521
EDR 2	3.8106
EDR 2 D	3.8106
EDR 3	3.7885
EDR 3 D	3.7885
EDR 3 S	3.7885
EDR 12	3.7512RS
EDR 12 D	3.7512RS
EDR 12 S	3.7512RS
EDR 23	3.7524RS
EDR 40	3.7512RS
EDR 40 D	3.7512RS
EDR 49	3.7524RS
EDR 80	3.8323
EDR 85	3.7691
EDR 92	3.8114
EDR 98	3.7560RS
EDR 109	3.7525RS
EDR 113	3.7524RS
EDR 123	3.7573/12RS
EDR 130	3.7573/21RS
EDR 135	3.7573/12RS
EDR 151	3.7561RS
EDR 157	3.7561RS
EDR 159	3.8126RS
EDR 161	3.8257RS
EDR 182	3.7573/21RS
EDR 183	3.7573/21RS
EDR 187	3.7561RS
EDR 210	3.8257RS
EDR 240	3.7573/40RS
EDR 248	3.7573/21RS
EDR 249	3.8126RS
EDR 309	8.2733*5
F 155 A	2.7512PHT
F 160	2.7792PHT
F 161	2.7793PHT
F 190	3.7892
F 000 99C 602	4.7246
F 000 ZS0 001	9.6092
F 000 ZS0 111	9.6040
F 000 ZS0 206	9.6316*4
F 000 ZS0 207	9.6316
F 01R 00A 025	9.6088
FE 900	2.7714
FE 903	2.7723PHT
FE 926	3.7758
FM 412	2.8159
FM 417	2.8169
FM 420	2.8181
FM 431	3.8229
FM 432	3.8229
FM 436?	3.8237
FM 437	3.8237RS
FM 438	3.8237
FM 439	3.8229
FM 441	3.8237RS
FM 442	3.8237
FM 443	3.8237RS
FM 444	3.8236RS
FM 445	3.8236RS
FM 446	3.8237RS
FM 447	3.8240
FM 449	3.8241
FM 700	2.8625
FM 701	2.8186
FM 702	2.8190
FM 706	2.8176
FM 707	2.8201PHT
FM 710	2.8182
FM 711	2.8193
FM 712	2.8198PHT
FM 713	2.8198PHT
FM 714	2.8198PHT
FM 717	2.8209PHT
FM 725	3.8242RS
FM 725 A	3.8242RS
FM 726 A	3.8714RS
FM 727	3.8242RS
FM 727 A	3.8242RS
FM 728 A	3.8255RS
FM 735/5	3.8251RS
FM 736	3.8260
GN10210-12B1	9.6375
GN10236-12B1	9.6329
GN10248-11B1	9.6508
GN10314-12B1	9.6361
GN10337-12B1	9.6457
GN10571-12B1	9.6375
GN10572-12B1	9.6375
J 610	2.7602
J 611	2.7594
J 617	2.7957
J 619	2.7911
J 623	2.7592
J 627	2.7599
J 633	2.7903
J 641	2.8303/1
J 644	2.7593
J 659	3.7614
J 660	3.8323
J 661	3.7614
J 662	3.7518RS
J 666	3.8323
J 667	3.7952
J 670	3.7627
J 672	3.7956
J 675	3.7614
J 686	3.7973
J 852	2.7607
J 855	2.8303/1
J 856	2.7922
J 858	2.7940
J 864	2.7630/32
J 865	2.7613
J 871	2.7946
J 873	2.7617
J 875	2.7622
J 876	2.8322/18
J 878	2.7941
J 879	2.7948
JD 633	2.7903
JD 659	3.7614
JD 661	3.7614
JD 662	3.7518RS
JP 873	2.7617
L 330	3.8125
L 330/1	3.8126RS
L 347	2.8085PHT
L 350	2.8083PHT
L 360	2.8094PHT
L 366	2.8070
L 368	2.7783
L 371	2.8075
L 373	2.8078
L 377	3.8106
L 379	3.8107
L 381	3.8107
L 383	3.8107
L 387	3.7885
L 390 A	3.7688
L 391	3.8112
L 399/1	3.8124RS
MTR 01	9.4005
P 603	2.8342
P-125-3706-800	1.7271
P-125-500	2.8625
QA 1140	1.2547
QA 1160	1.2529HDV
QA 1420	1.2521
QA 1470	1.2529HDV
QA 1570	1.2532HDV
QA 1610	1.2534HDVS
QA 1640	1.2549HDVS
QA 1710	1.2540
QA 1920	1.2562
QA 2990	1.3522HDV
QA 3430	1.4456HDV
QA 3440	1.3511HDV
QA 3520	1.3455HDVS
QA 4090	1.5084
QA 4400	1.4923
QA 4480	1.4932
QA 4510	1.4939
QA 4520	1.4940
QA 4540	1.4942
QA 5120	1.4143HDV
QA 5130	1.4144HDV
QA 5400	1.3686
QA 5450	1.3691/2
QA 5480	1.3691/5
QA 5670	1.3655
QA 5705	1.3656
QA 5730	1.6854
QA 6200	1.4683MHDV
QB 1030	0.0856
QB 1640	0.0323
QB 4010	0.0334
QB 4011	0.0334
QB 5180	0.0617
QB 5310	0.0179/96
QB 5390	0.0179/95
QB 6060	0.0179/112
QC 0720	3.7518RS
QC 0750	3.7512RS
QC 0760	3.7514RS
QC 0810	3.7518RS
QC 0820	3.7521RS
QC 0840	3.7524RS
QC 0841	3.7560RS
QC 0880	3.7526RS
QC 0930	3.7534RS
QC 0970	3.7527RS
QC 1130	3.8323
QC 2390	3.7593
QC 3770	3.8106
QC 3830	3.8107
QC 3890	3.7885
QC 3910	3.8112
QC 4410	3.8237
QC 4440	3.8236RS
QC 4950	3.7691
QC 4990	3.7688
QC 5560	3.7694
QC 5640	3.8247RS
QC 6590	3.7614
QC 7250	3.8242RS
QC 9565	3.8114
QC 9580	3.7555RS
QC 9585	3.7627
QC 9590	3.7573/12RS
QC 9600	3.7567RS
QC 9605	3.7596
QD 0380	2.7462
QD 0390	2.7472PHT
QD 0541	2.7479PHT
QD 1060	2.7480PHT
QD 1070	2.7481PHT
QD 1120	2.7492PHT
QD 1130	2.7493PHT
QD 1170	2.7499
QD 2025	2.8091PHT

marketing@facet.it

QD 2140	***2.7566PHT***
QD 3500	***2.8083PHT***
QD 3660	***2.8070***
QD 3680	***2.7783***
QD 3710	***2.8075***
QD 3730	***2.8078***
QD 4170	***2.8169***
QD 4200	***2.8181***
QD 4276	***2.7594***
QD 4600	***2.8543***
QD 4643	***2.8201PHT***
QD 4850	***2.7649PHT***
QD 5000	***2.7658PHT***
QD 6190	***2.7911***
QD 6200	***2.8322/9***
QD 6330	***2.7903***
QD 6410	***2.8303/1***
QD 6440	***2.7593***
QD 7020	***2.8190***
QD 7530	***2.7659PHT***
QD 8550	***2.7521PHT***
QD 8555	***2.7481PHT***
QD 8570	***2.7592***
QD 8590	***2.7614***
QD 8595	***2.7903***
QD 8600	***2.7508PHT***
QD 8610	***2.7573PHT***
QD 8615	***2.7922***
QD 8625	***2.7523PHT***
QD 8630	***2.8303/1***
QD 8640	***2.7619***
S 57/45	***3.8229***
SE 100 AXY	***8.4976M**N***
SE 100 CX	***8.4976M**N***
SE 100 EX	***8.4976M**N***
SE 100 GX	***8.4976M**N***
SE 100 HXY	***8.4976M**N***
SE 101 AB	***8.4980M**N***
SE 101 C	***8.4980M**N***
SM 800 AX	***8.4961/1**N***
SM 800 BX	***8.4961/1**N***
SM 803 AX	***8.4961/1**N***
SM 806 AX	***8.4961/1**N***
SM 807 AX	***8.4963/1**N***
SV 460	***2.8543***
US 130	***2.8627PHT***
US 139/1	***3.8716RS***

FA-IGN19Q1
↓
FA-IGN22Q1

VARIATIONS COMPARED TO PREVIOUS CATALOGUE EDITION

FA-IGN22Q1

•VARIAZIONI RISPETTO AI PRECEDENTI CATALOGHI •VARIATIONS RAPPORTÉES AUX CATALOGUES PRÉCÉDENTS
•ÄNDERUNGEN IM VERGLEICH ZU FRÜHEREN KATALOGAUSGABEN •VARIACIONES CON RESPECTO A CATALOGOS ANTERIORES

CONDENSERS

CONDENSATORI
CONDENSATEURS
KONDENSATOREN
CONDENSADORES

Code		New code
0.0179/80	E	
0.0179/95	E	
0.0323	E	
0.0334	E	
0.0339	E	
0.0856	E	

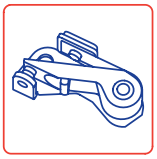

CONTACT SETS

COPPIE CONTATTI
RUPTEURS
KONTAKTSÄTZE
PLATINOS

Code		New code
1.2540	E	
1.2547	E	
1.2564	E	
1.3656	E	
1.3656HDV	E	
1.3667	E	
1.3676	E	
1.3691/11U	E	
1.3691/12U	E	
1.3691/2	E	
1.3691/3	E	
1.3724	E	
1.4143HDV	S	
1.4689	E	
1.4926	E	
1.4940HDV	E→	*1.4940*
1.4949	E	

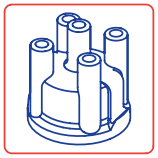

DISTRIBUTOR CAPS

CALOTTE
TETES D'ALLUMEUR
VERTEILERKAPPEN
TAPAS DEL DISTRIBUIDOR

Code		New code
2.7498	E	
2.7499	E	
2.7530/10PHT	S	
2.7530/18PHT	S	
2.7530/22PHT	S	
2.7530/23PHT	S	
2.7530/27PHT	S	
2.7530/28PHT	E	
2.7530/31PHT	E	
2.7530/5PHT	E	
2.7530/6PHT	S	
2.7530/7PHT	S	
2.7530/8PHT	S	
2.7566PHT	S	
2.7573PHT	S	
2.7574PHT	E	
2.7575PHT	S	
2.7592	S	
2.7599	S	
2.7602	S	
2.7607	S	
2.7613	S	
2.7617	S	
2.7619	S	
2.7622	S	
2.7627	E	
2.7628	E	
2.7630/10	E	
2.7630/18	S	
2.7630/21	E	
2.7630/22	S	
2.7630/26	S	
2.7630/27	S	
2.7630/29	E	
2.7630/32	S	
2.7630/37	S	
2.7630/42	E	

E	**Dropped**	Eliminato	Éliminé	Gestrichen	Eliminado
→	**New code**	Nuovo codice	Nouvelle reference	Neue Teile-NR.	Nuevo codigo
S	**Supplied until depletion**	Fornibile fino ad esaurimento	Fourni jusqu'à l'épuisement du stock	Liefebar solange Vorrat reicht	Suministrado hasta el stock termina

marketing@facet.it

VARIATIONS COMPARED TO PREVIOUS CATALOGUE EDITION

•VARIAZIONI RISPETTO AI PRECEDENTI CATALOGHI •VARIATIONS RAPPORTÉES AUX CATALOGUES PRÉCÉDENTS
•ÄNDERUNGEN IM VERGLEICH ZU FRÜHEREN KATALOGAUSGABEN •VARIACIONES CON RESPECTO A CATALOGOS ANTERIORES

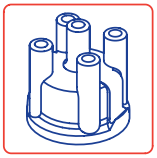

DISTRIBUTOR CAPS

CALOTTE
TETES D'ALLUMEUR
VERTEILERKAPPEN
TAPAS DEL DISTRIBUIDOR

Code		New code
2.7630/43	E	
2.7641	E	
2.7645	S	
2.7649PHT	S	
2.7665PHT	S	
2.7666PHT	S	
2.7675PHT	S	
2.7677PHT	E	
2.7678PHT	E	
2.7684PHT	S	
2.7688	S	
2.7714	E	
2.7716	S	
2.7783	S	
2.7792PHT	S	
2.7793PHT	S	
2.7903	S	
2.7904	E	
2.7911	E	
2.7922	S	
2.7946	S	
2.7958	E	
2.7960	S	
2.7963	E	
2.7969	S	
2.7971	S	
2.7973	S	
2.7975	S	
2.7977	S	
2.7979	S	
2.7982	S	
2.7984	E	
2.7988	S	
2.7992	E	
2.7993	S	
2.8070	S	
2.8075	S	

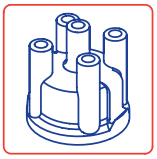

DISTRIBUTOR CAPS

CALOTTE
TETES D'ALLUMEUR
VERTEILERKAPPEN
TAPAS DEL DISTRIBUIDOR

Code		New code
2.8078	S	
2.8083PHT	S	
2.8085PHT	S	
2.8094PHT	E	
2.8096PHT	E	
2.8099PHT	E	
2.8100PHT	S	
2.8102	S	
2.8103	S	
2.8106	S	
2.8176	E	
2.8193	S	
2.8210PHT	S	
2.8322/16	S	
2.8322/17	S	
2.8322/22	S	
2.8322/26	S	
2.8322/31	S	
2.8322/32	S	
2.8322/35	E	
2.8322/36	E	
2.8322/37	S	
2.8322/40	S	
2.8322/47	E	
2.8322/49	S	
2.8322/51	S	
2.8322/52	S	
2.8322/54	E	
2.8322/55	S	
2.8322/58	S	
2.8322/69	E	
2.8627PHT	S	

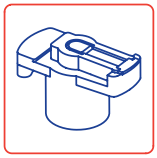

ROTORS

DISTRIBUTORI
DISRUPTEURS
VERTEILERLÄUFER
ROTORES DEL DISTRIBUIDOR

Code		New code
3.7521RS	S	
3.7534RS	E	
3.7545RS	E	
3.7573/13RS	E	
3.7573/17RS	E	
3.7573/19RS	S	
3.7573/22RS	E	
3.7573/25RS	S	
3.7590	S	
3.7593	E	
3.7597	E	
3.7610	E	
3.7634	S	
3.7680	E→	*3.7691*
3.7688RS	E	
3.7696RS	S	
3.7892	S	
3.7894RS	E	
3.7952	S	
3.7956	S	
3.7970	S	
3.7981	E	
3.7986	S	
3.7997RS	E	
3.8114	S	
3.8121	S	
3.8125	S	
3.8236RS	S	
3.8241	E	
3.8242RS	S	
3.8251RS	E	
3.8258	E	
3.8323	S	
3.8330	S	
3.8331/33	S	
3.8331/37	S	
3.8331/7	S	

E	Dropped	Eliminato	Éliminé	Gestrichen	Eliminado
→	New code	Nuovo codice	Nouvelle reference	Neue Teile-NR.	Nuevo codigo
S	Supplied until depletion	Fornibile fino ad esaurimento	Fourni jusqu'à l'épuisement du stock	Liefebar solange Vorrat reicht	Suministrado hasta el stock termina

FA-IGN19Q1
↓
FA-IGN22Q1

VARIATIONS COMPARED TO PREVIOUS CATALOGUE EDITION

FA-IGN22Q1

•VARIAZIONI RISPETTO AI PRECEDENTI CATALOGHI •VARIATIONS RAPPORTÉES AUX CATALOGUES PRÉCÉDENTS
•ÄNDERUNGEN IM VERGLEICH ZU FRÜHEREN KATALOGAUSGABEN •VARIACIONES CON RESPECTO A CATALOGOS ANTERIORES

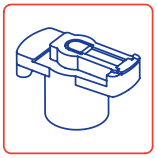

ROTORS

DISTRIBUTORI
DISRUPTEURS
VERTEILERLÄUFER
ROTORES DEL DISTRIBUIDOR

Code		*New code*
3.8716RS	S	

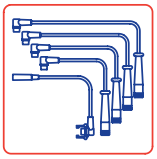

IGNITION CABLE SETS

SERIE CAVI ACCENSIONE COMPLETA
JEUX CABLES D'ALLUMAGE
ZÜNDKABELSÄTZE
JUEGOS DE CABLES DE ENCENDIDO

Code		*New code*
4.7004	S	
4.7005	E	
4.7020	S	
4.7028	E	
4.7049	S	
4.7059	S	
4.7061	S	
4.7064	S	
4.7069	E	
4.7100	E	
4.7107	E	
4.7111	S	
4.7120	S	
4.7159	E	
4.7181	E	
4.7195	E	
4.7199	E	
4.7214	S	
4.7231	E	
4.7236	S	
4.7239	S	
4.7241	S	
4.7245	S	
4.7247	S	
4.7251	S	
4.8351	S	
4.8354	S	
4.8372	S	
4.8386	S	
4.8398	S	
4.8415	E	
4.8417	E	
4.8429	E	
4.8432	S	
4.8456	E	
4.8466	S	
4.8471	S	

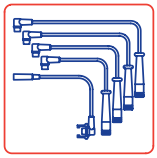

IGNITION CABLE SETS

SERIE CAVI ACCENSIONE COMPLETA
JEUX CABLES D'ALLUMAGE
ZÜNDKABELSÄTZE
JUEGOS DE CABLES DE ENCENDIDO

Code		*New code*
4.8491	E	
4.8493	S	
4.8494	S	
4.8507	S	
4.8509	S	
4.8511	E	
4.8513	E	
4.8514	S	
4.8527	E	
4.8539	E	
4.8543	E	
4.8572	E	
4.8573	E	
4.8578	E	
4.8587	E	
4.8608	S	
4.8609	E	
4.8612	E	
4.8613	E	
4.8623	S	
4.8634	S	
4.8650	E	
4.8655	E	
4.8660	E	
4.8666	E	
4.8674	S	
4.8688	S	
4.8689	S	
4.8692	E	
4.8694	S	
4.8700	E	
4.8716	S	
4.8725	S	
4.8727	E	
4.8736	S	
4.8737	S	
4.8747	E	

E	**Dropped**	Eliminato	Éliminé	Gestrichen	Eliminado
→	**New code**	Nuovo codice	Nouvelle reference	Neue Teile-NR.	Nuevo codigo
S	**Supplied until depletion**	Fornibile fino ad esaurimento	Fourni jusqu'à l'épuisement du stock	Liefebar solange Vorrat reicht	Suministrado hasta el stock termina

marketing@facet.it

VARIATIONS COMPARED TO PREVIOUS CATALOGUE EDITION

•VARIAZIONI RISPETTO AI PRECEDENTI CATALOGHI •VARIATIONS RAPPORTÉES AUX CATALOGUES PRÉCÉDENTS
•ÄNDERUNGEN IM VERGLEICH ZU FRÜHEREN KATALOGAUSGABEN •VARIACIONES CON RESPECTO A CATALOGOS ANTERIORES

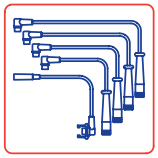

IGNITION CABLE SETS

SERIE CAVI ACCENSIONE COMPLETA
JEUX CABLES D'ALLUMAGE
ZÜNDKABELSÄTZE
JUEGOS DE CABLES DE ENCENDIDO

Code		*New code*
4.8748	E	
4.8768	E	
4.8801	S	
4.8802	S	
4.8808	E	
4.8815	E	
4.8839	E	
4.8864	E	
4.8884	E	
4.8887	S	
4.8888	S	
4.8889	E	
4.8900	E	
4.8956	E	
4.9007	S	
4.9025	S	
4.9078	S	
4.9138	E	
4.9140	E	
4.9145	S	
4.9209	S	
4.9231	E	
4.9237	S	
4.9278	S	
4.9281	E	
4.9300	S	
4.9323	E	
4.9332	S	
4.9343	E	
4.9344	E	
4.9345	S	
4.9353	E	
4.9356	E	
4.9363	S	
4.9364	S	
4.9373	E	
4.9374	E	

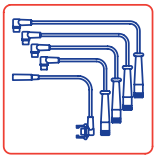

IGNITION CABLE SETS

SERIE CAVI ACCENSIONE COMPLETA
JEUX CABLES D'ALLUMAGE
ZÜNDKABELSÄTZE
JUEGOS DE CABLES DE ENCENDIDO

Code		*New code*
4.9376	E	
4.9385	S	
4.9393	E	
4.9398	E	
4.9399	E	
4.9401	E	
4.9411	S	
4.9413	S	
4.9415	S	
4.9417	E	
4.9420	E	
4.9433	E	
4.9434	E	
4.9435	E	
4.9443	E	
4.9446	S	
4.9447	E	
4.9479	E	
4.9484	E	
4.9489	S	
4.9491	S	
4.9492	E	
4.9497	S	
4.9499	S	
4.9501	E	
4.9506	E	
4.9508	E	
4.9509	S	
4.9511	S	
4.9518	E	
4.9529	S	
4.9531	S	
4.9549	E	
4.9551	S	
4.9559	S	
4.9562	E	
4.9580	S	

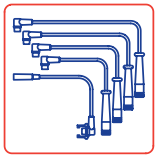

IGNITION CABLE SETS

SERIE CAVI ACCENSIONE COMPLETA
JEUX CABLES D'ALLUMAGE
ZÜNDKABELSÄTZE
JUEGOS DE CABLES DE ENCENDIDO

Code		*New code*
4.9595	E	
4.9607	E	
4.9608	E	
4.9609	S	
4.9614	S	
4.9619	S	
4.9624	S	
4.9630	S	
4.9634	S	
4.9639	S	
4.9640	S	
4.9641	S	
4.9643	S	
4.9649	S	
4.9654	E	
4.9657	E	
4.9658	E	
4.9660	S	
4.9667	E	
4.9671	E	
4.9677	E	
4.9680	S	
4.9682	E	
4.9686	E	
4.9691	S	
4.9699	S	
4.9702	S	
4.9709	E	
4.9711	S	
4.9719	S	
4.9723	S	
4.9729	E	
4.9730	S	
4.9731	S	
4.9732	S	
4.9738	E	
4.9739	S	

E	**Dropped**	Eliminato	Éliminé	Gestrichen	Eliminado
→	**New code**	Nuovo codice	Nouvelle reference	Neue Teile-NR.	Nuevo codigo
S	**Supplied until depletion**	Fornibile fino ad esaurimento	Fourni jusqu'à l'épuisement du stock	Liefebar solange Vorrat reicht	Suministrado hasta el stock termina

FA-IGN19Q1
↓
FA-IGN22Q1

VARIATIONS COMPARED TO PREVIOUS CATALOGUE EDITION

FA-IGN22Q1

•VARIAZIONI RISPETTO AI PRECEDENTI CATALOGHI •VARIATIONS RAPPORTÉES AUX CATALOGUES PRÉCÉDENTS
•ÄNDERUNGEN IM VERGLEICH ZU FRÜHEREN KATALOGAUSGABEN •VARIACIONES CON RESPECTO A CATALOGOS ANTERIORES

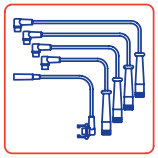

IGNITION CABLE SETS

SERIE CAVI ACCENSIONE COMPLETA
JEUX CABLES D'ALLUMAGE
ZÜNDKABELSÄTZE
JUEGOS DE CABLES DE ENCENDIDO

Code		*New code*
4.9740	S	
4.9741	E	
4.9745	S	
4.9753	S	
4.9760	E	
4.9764	E	
4.9767	S	
4.9789	E	
4.9792	E	
4.9793	E	
4.9813	S	
4.9817	E	
4.9819	S	
4.9823	S	
4.9835	S	
4.9841	S	
4.9851	S	
4.9856	S	
4.9878	E	
4.9879	E	
4.9880	S	
4.9882	E	
4.9883	S	
4.9887	S	
4.9888	S	
4.9900	S	
4.9904	S	
4.9914	S	
4.9921	E	
4.9932	S	
4.9933	E	
4.9937	S	
4.9942	E	
4.9947	S	
4.9954	E	
4.9955	E	
4.9962	E	

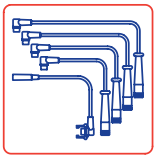

IGNITION CABLE SETS

SERIE CAVI ACCENSIONE COMPLETA
JEUX CABLES D'ALLUMAGE
ZÜNDKABELSÄTZE
JUEGOS DE CABLES DE ENCENDIDO

Code		*New code*
4.9963	E	
4.9976	E	
4.9984	E	
4.9990	E	

PICK-UPS

IMPULSORI
CAPTEURS
IMPULSGEBER
CAPTADORES

Code		*New code*
8.2653	E	
8.2660	S	
8.4961/1	S	
8.4963/1	S	
8.4976M	S	
8.4977/1	S	
8.4980M	S	

E	**Dropped**	Eliminato	Éliminé	Gestrichen	Eliminado
→	**New code**	Nuovo codice	Nouvelle reference	Neue Teile-NR.	Nuevo codigo
S	**Supplied until depletion**	Fornibile fino ad esaurimento	Fourni jusqu'à l'épuisement du stock	Liefebar solange Vorrat reicht	Suministrado hasta el stock termina

marketing@facet.it

VARIATIONS COMPARED TO PREVIOUS CATALOGUE EDITION

•VARIAZIONI RISPETTO AI PRECEDENTI CATALOGHI •VARIATIONS RAPPORTÉES AUX CATALOGUES PRÉCÉDENTS
•ÄNDERUNGEN IM VERGLEICH ZU FRÜHEREN KATALOGAUSGABEN •VARIACIONES CON RESPECTO A CATALOGOS ANTERIORES

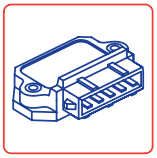

IGNITION MODULES

MODULI DI ACCENSIONE
MODULES D'ALLUMAGE
ZÜNDMODULE
MÓDULOS DE ENCENDIDO

Code		New code
9.4007	E	
9.4068	E	
9.4073	E	

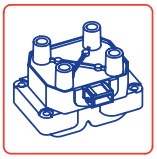

IGNITION COILS

BOBINE DI ACCENSIONE
BOBINES D'ALLUMAGE
ZÜNDSPULEN
BOBINAS DE ENCENDIDO

Code		New code
9.6007	E	
9.6009	E	
9.6010	E→	9.6241
9.6055	S	
9.6059	E	
9.6091	E	
9.6097	E	
9.6099	E	
9.6101	E	
9.6111	E	
9.6112	E	
9.6116	E	
9.6152	E	
9.6173	E	
9.6176	E	
9.6183	E	
9.6184	E	
9.6185	E→	9.6185S
9.6189	E	
9.6199	E	
9.6199S	E	
9.6212	E	
9.6213	E	
9.6216	E	
9.6216K	E	
9.6217	E	
9.6244	E	
9.6252	E	
9.6264	E	
9.6266S	E	
9.6276	S	
9.6277	E→	9.6496
9.6278	S	
9.6289	S	
9.6293	E	
9.6312	E	
9.6313	E	

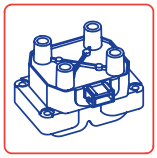

IGNITION COILS

BOBINE DI ACCENSIONE
BOBINES D'ALLUMAGE
ZÜNDSPULEN
BOBINAS DE ENCENDIDO

Code		New code
9.6314	E	
9.6316	E	
9.6407	S	
9.6457	S	
9.6483	S	
9.8007	E	
9.8116	E	
9.8123	E	

E	Dropped	Eliminato	Éliminé	Gestrichen	Eliminado
→	New code	Nuovo codice	Nouvelle reference	Neue Teile-NR.	Nuevo codigo
S	Supplied until depletion	Fornibile fino ad esaurimento	Fourni jusqu'à l'épuisement du stock	Liefebar solange Vorrat reicht	Suministrado hasta el stock termina

GENERAL CONDITIONS OF SALE

1. SCOPE AND EFFECTIVENESS

All supplies of products made by Facet S.r.l. (the «Seller») to a customer (the «Buyer») are governed by these general terms and conditions which shall prevail on purchase conditions of the Buyer, as well as by any special conditions provided for in offers and/or order confirmations by the Seller. In the case of conflict between the general terms and conditions and the special conditions, the latter shall prevail.
The data and illustrations relating to products appearing in the Seller's catalogues or brochures are indicative in nature and not binding, unless expressly provided so in the order confirmation by the Seller and may be subject to changes in design and materials without notice.
The original product codes indicated in the catalogues and in other documents are mentioned only for the purpose of identifying the spare parts. The Seller supplies only products of its own production identified with its own product codes and not products having OE codes.

2. COMPLETION OF THE CONTRACT

The supply contract is considered being completed only on the Seller's written confirmation accepting the Buyer's order. The Seller reserves the right not to accept orders in cases where there is a dispute with the customer relating to a previous order.

3. PRICES AND PAYMENTS

Unless otherwise agreed, payments of the price must be carried out by the Buyer in accordance with the terms and conditions provided and using the method provided for in the order confirmation at the domicile of the Seller. Payments made by the Buyer to finders and/or agents without a special Power of Attorney will not be enforceable on the Seller.
In the event of a delay in payment, the Buyer will be liable for the payment of late payment default interest at the rate of the European Central Bank in force on that date plus 7 (seven) points. In every case, the Seller has the right to ask for compensation for the greater damage suffered.
The Buyer will not for any reason, except with written authorisation, be able to off-set or retain sums due to the Seller, nor will he be able to suspend payments.
The prices of the products are to be considered in Euros and do not include VAT, packaging, transport and insurance costs. The Seller may change the prices and rates in force at any time and without notice, except for ongoing orders. Price increases are possible for increases in raw materials, labour, transport, insurance premiums, etc.

4. TERMS OF DELIVERY AND PRODUCTION

Unless otherwise stated in the order confirmation, supplies of the products are intended for goods delivered in accordance with Incoterms 2010: FCA Orbassano. The goods always travel on behalf of and at the risk of the Buyer.
The terms of delivery are indicative and in the event of delay the Buyer is not entitled to request termination of the contract and/or compensation for damages.

5. RETENTION OF TITLE

The delivered products remain the property of the Seller until full payment of the price has been received.
The Buyer shall have the right to sell the purchased products, or the new products which incorporate the products supplied by the Seller, on the understanding that in such cases, all the proceeds will be transferred to the Seller right down to the agreed price due from the Buyer to the Seller for the supply of such products.
The right to sell the products shall lapse if the Buyer has failed to comply with payment obligations for a period greater than 20 (twenty) working days after the payment deadline. In such event, it will be the responsibility of the Seller to revoke the right to sell in writing to the Buyer. The Buyer should put in place every measure necessary for the protection of the products subject to the retention of title, and any other measure necessary to not confuse the products of the Seller with products from other suppliers and keep the products of the Seller in well defined areas and easily identifiable.

6. RESPONSIBILITY OF THE SELLER AND LIMITS

The Seller is exclusively responsible for the correct production of products supplied, which will require to have all the features provided by the Seller in the order confirmation. The Seller does not assume any responsibility, however, for possible faulty operation of machines or systems made by the Buyer using products supplied by the Seller.
The products must be properly installed by trained and qualified technicians only, in accordance with the vehicle specifications and complying with the requirements of national regulations.
In such cases, the Buyer will not be able seek damages for lost profits, loss of production, reputational damages, vehicle breakdown.
The liability of the Seller is, however, limited to the value of the goods supplied, unless due to serious negligence or willful misconduct within the meaning of the law.

7. FORCE MAJEURE

Should the Seller be unable to comply with the contract for reasons of force majeure or independent factors outside his control, the deadlines for the supply shall be automatically extended for a period equivalent to the lingering effects of the force majeure event. The following are to be regarded as causes of force majeure (without limitation): lack of energy or raw materials, strikes, public administration measures, impediments to circulation or to production activities.

8. COMPLAINTS and ACCEPTANCE OF PRODUCTS

Any complaint concerning the non-conformity of the goods delivered or for damages caused by transportation or for any missing quantities with respect to the products ordered, must be communicated by registered letter, with receipt acknowledgment, addressed directly to the Seller within 8 (eight) days from the date of delivery of the products in the case of visible defects and within 8 (eight) days from the discovery in the case of hidden defects, and in any case, within a month from delivery, with a detailed explanation of the facts. In the event of non-compliance with the above, the amounts invoiced are considered, to all effects, accepted and no longer contestable by the Buyer.
The return of goods will not be accepted unless previously agreed in writing by the Seller.

9. CONFORMITY TO THE SPECIFICATIONS AND GUARANTEE TERMS

The Seller guarantees that the products will be compliant with the technical specifications declared by the Seller to the Buyer in the order confirmation and the guarantee will be valid for 2 (two) years from the date of delivery of the products and for products or parts replaced, from the day of their replacement.
During the guarantee period, the Seller to whom the Buyer has made a formal notice of the defects, undertakes, at his own discretion, and within a reasonable period of time, to repair or replace the products or the defective parts free of charge. The costs and risks of transportation of the defective products to the Seller's address are borne by the Buyer. The replaced products remain the property of the Seller.
The guarantee is considered lapsed where the end use of the product does not conform with the regular use of such products or not provided for in the catalogues of the Seller or if the products have been modified or repaired without the Seller's authorisation.

10. GUARANTEE OF THE SUITABILITY OF THE PRODUCTS ONLY TO EU RULES

The Seller guarantees that the products will conform to the standards of the European Union (EU) as they may be applicable.
No guarantee is issued by the Seller for the conformity of these products with the rules and regulations, expressly including those rules regarding safety and accident prevention, in force in the Buyer's country, where those reside outside the EU, or more generally, in any country that does not belong to the EU in which the supplied products are used.

11. CONFIDENTIALITY AND DATA PROTECTION

Documents of any kind provided by the Seller shall remain the Seller's property and cannot be transferred to a third party or reproduced. The Buyer undertakes, even after the end of the contract, not to disclose commercial secrets and confidential information that the Buyer has been party to or which has come to his knowledge in the course of his relationship with the Seller.
The Seller herewith declares that he will use the personal data transferred by the Customer in respect of the terms provided under the Italian privacy law (Legislative Decree n. 196/03).

12. TERMINATION OF THE CONTRACT

The contract may be terminated pursuant to art. 1456 of the Italian Civil Code by virtue of a simple written declaration on the part of the Seller, taking advantage of this termination clause if the Buyer:
- omits or delays payments due;
- is placed in liquidation or has been subject to any insolvency proceedings.

13. INTELLECTUAL PROPERTY

The Seller retains the intellectual property of projects, studies, drawings, models and products which are realised or made in his name and on his behalf. The brands under which the products are sold may not be used by the Buyer if they are not identified as such.

14. APPLICABLE LAW AND DISPUTE RESOLUTION CLAUSE

All contracts with the Seller shall be governed by Italian law. Any dispute will be referred to the exclusive jurisdiction of the Court of Turin.

Date: _____ Stamp, Name, Surname and Signature of the Buyer: _____

Pursuant to articles. 1341 and 1342 of the Italian Civil Code, the Buyer declares to have read and specifically approved the terms contained in the following articles of general conditions: art. 3 Set-off Prohibition; art. 5 Retention of title; art. 6 Limitation of Liability; art. 8 Complaints and Acceptance of Products; art. 14 Dispute Resolution Clause.

Date: _____ Stamp, Name, Surname and Signature of the Buyer: _____

MOD-0350(F)_I
(valide dal 1° agosto 2017)

CONDIZIONI GENERALI DI VENDITA

1. AMBITO DI APPLICAZIONE E EFFICACIA

Tutte le forniture di prodotti effettuate da Facet S.r.l. (il "Venditore") a un cliente (l'"Acquirente") sono disciplinate dalle presenti condizioni generali che prevalgono sulle condizioni d'acquisto dell'Acquirente, nonché dalle condizioni particolari previste nelle offerte e/o conferme d'ordine del Venditore. In caso di contrasto fra quanto contenuto nelle condizioni generali e nelle condizioni particolari, queste ultime prevarranno.
I dati e le illustrazioni relative ai prodotti risultante dai cataloghi o prospetti del Venditore hanno carattere indicativo e non valore vincolante se non espressamente previsto nella conferma d'ordine del Venditore e possono essere soggetti a modifiche di disegno e materiale senza preavviso.
I numeri originali (OE) indicati nei cataloghi od in altri documenti sono menzionati solamente al fine di identificare le parti di ricambio. Il venditore fornisce unicamente prodotti di propria produzione contrassegnati con il proprio codice articolo e non prodotti con i numeri OE.

2. FORMAZIONE DEL CONTRATTO

Il contratto di fornitura si perfeziona con la conferma scritta del Venditore di accettazione dell'ordine dell'Acquirente. Il Venditore si riserva il diritto di non accettare ordini nel caso in cui vi sia una controversia con il cliente relativa ad un ordine precedente.

3. PREZZI E PAGAMENTI

Salvo diverso accordo, i pagamenti del prezzo devono essere effettuati dall'Acquirente nei termini e con le modalità previsti nella conferma d'ordine presso il domicilio del Venditore. I pagamenti fatti dall'Acquirente a procacciatori e/o agenti senza una procura specifica non saranno opponibili al Venditore.
In caso di ritardo nei pagamenti, l'Acquirente sarà tenuto al pagamento degli interessi moratori pari al tasso della Banca Centrale Europea in vigore a quella data, maggiorato di 7 (sette) punti, salvo in ogni caso la facoltà per il Venditore di chiedere il risarcimento del maggior danno subito.
L'Acquirente non potrà per qualunque motivo, salvo autorizzazione scritta,compensare o trattenere somme dovute al venditore, né potrà sospendere i pagamenti.
I prezzi dei prodotti si intendono in Euro e non comprendono IVA, imballo, spese di trasporto e assicurazione. Il Venditore può modificare i prezzi e le tariffe in vigore in ogni momento e senza preavviso, salvo per gli ordini in corso. Ciò se si verificano rincari delle materie prime, della manodopera, dei trasporti, dei premi d'assicurazione, etc.

4. TERMINI DI CONSEGNA E RESA

Se non diversamente stabilito nella conferma d'ordine, le forniture dei prodotti si intendono per merce resa secondo Incoterms 2010: FCA Orbassano. La merce viaggia sempre per conto e rischio dell'Acquirente.
I termini di consegna si intendono indicativi e in caso di ritardo l'Acquirente non ha il diritto di richiedere la risoluzione del contratto e/o il risarcimento dei danni.

5. RISERVA DI PROPRIETÀ

I prodotti consegnati restano di proprietà del Venditore fino al completo pagamento del relativo prezzo.
L'Acquirente avrà il diritto di vendere i prodotti acquistati, o i nuovi prodotti in cui i prodotti fornitigli dal Venditore siano stati incorporati, fermo restando che in tal caso tutti i proventi verranno trasferiti al Venditore fino alla concorrenza del prezzo dovuto dall'Acquirente al Venditore per la fornitura di tali Prodotti.
Tale diritto di vendere i prodotti decade qualora l'Acquirente sia rimasto inadempiente all'obbligo di pagamento per un periodo di tempo superiore a 20 (venti) giorni lavorativi rispetto alla scadenza. A tal fine, sarà onere del Venditore comunicare per iscritto all'Acquirente la revoca del diritto a vendere. L'Acquirente dovrà porre in essere ogni misura necessaria per la protezione dei prodotti oggetto della riserva di proprietà, nonché ogni misura per non confondere i prodotti del Venditore con i prodotti di altri fornitori e conservare i prodotti del Venditore in spazi ben delimitati e facilmente individuabili.

6. RESPONSABILITA' DEL VENDITORE E LIMITI

Il Venditore è esclusivamente responsabile della corretta produzione dei prodotti forniti, che dovranno avere le caratteristiche previste nella conferma d'ordine del Venditore. Il Venditore non assume, invece, alcuna responsabilità per l'eventuale difettoso funzionamento di macchine o sistemi realizzati dall'Acquirente con i prodotti forniti dal Venditore.
I prodotti devono essere installati in modo appropriato solo da tecnici competenti e qualificati, conformemente alle specifiche del veicolo e rispettando i requisiti delle normative nazionali.
In ogni caso, l'Acquirente non potrà chiedere il risarcimento dei danni per mancato profitto, perdita di produzione, perdita di immagine, fermo dell'autoveicolo.
La responsabilità del Venditore è, comunque, limitata al valore della merce fornita, salvo dolo o colpa grave ai sensi di legge.

7. FORZA MAGGIORE

Qualora il Venditore sia impossibilitato a rispettare il contratto per cause di forza maggiore o comunque indipendenti dalla sua volontà, i termini previsti per l'esecuzione della fornitura sono automaticamente prorogati per un periodo equivalente al perdurare degli effetti dell'evento di forza maggiore. A tal fine, sono da considerarsi cause di forza maggiore, ai fini esplicativi e non esaustivi: carenza di energia o di materie prime, scioperi, provvedimenti della pubblica amministrazione, impedimenti alla circolazione o alle attività produttive.

8. RECLAMI ed ACCETTAZIONE DEI PRODOTTI

Qualsiasi reclamo relativo alla non conformità delle merci consegnate o per danni conseguenti al trasporto o per eventuali quantità mancanti rispetto ai prodotti ordinati dovrà essere comunicato per lettera raccomandata con avviso di ricezione indirizzata direttamente al venditore entro 8 (otto) giorni dalla data di consegna dei Prodotti, in caso di vizi palesi ed entro 8 (otto) giorni dalla scoperta in caso di vizi occulti, e, comunque, entro un mese dalla consegna, con una dettagliata esposizione dei fatti. In difetto, gli importi fatturati si intenderanno, a tutti gli effetti, accettati e non più contestabili dall'Acquirente.
Non si accettano rese delle merci se non preventivamente autorizzate per iscritto dal Venditore.

9. CONFORMITÀ ALLE SPECIFICHE E TERMINI DI GARANZIA

Il Venditore garantisce che i prodotti saranno conformi alle specifiche tecniche dichiarate dal Venditore stesso all'Acquirente nella conferma d'ordine e detta garanzia avrà validità per 2 (due) anni decorrenti dalla data di consegna dei prodotti e, per i prodotti o componenti sostituiti, dal giorno della loro sostituzione.
Nel periodo di garanzia, il Venditore al quale l'Acquirente abbia denunciato i difetti, si impegna, a sua scelta, entro un termine ragionevole, a riparare o sostituire gratuitamente i prodotti o le parti di esse che fossero risultati difettosi. Le spese e i rischi per il trasporto dei prodotti risultati difettosi alla sede del Venditore sono a carico dell'Acquirente. I prodotti sostituiti restano di proprietà del Venditore.
La garanzia decade nel caso di utilizzo non conforme alla destinazione finale abituale dei prodotti o non prevista nei cataloghi del venditore oppure se i prodotti sono stati modificati o riparati senza l'autorizzazione del Venditore.

10. GARANZIA PER L'ADEGUATEZZA DEI PRODOTTI ALLE SOLE NORME UE

Il Venditore garantisce che i Prodotti saranno conformi alle norme dell'Unione europea (UE) a essi eventualmente applicabili.
Nessuna garanzia viene rilasciata dal Venditore in merito alla conformità di tali Prodotti con le norme e i regolamenti, ivi espressamente incluse le norme in tema di sicurezza e di antinfortunistica, in vigore nella nazione dell'Acquirente, ove questi risieda al di fuori della UE, o più in generale, in qualsivoglia nazione che non appartenga alla UE in cui i Prodotti forniti vengono utilizzati.

11. RISERVATEZZA E TUTELA DEI DATI

I documenti di qualsiasi natura forniti dal Venditore rimarranno di sua proprietà e non possono essere trasferiti a terzi o riprodotti. L'Acquirente si impegna, anche dopo la fine del contratto a non divulgare i segreti commerciali e le informazioni riservate che siano state al medesimo comunicati o dei quali venga a conoscenza nel corso del suo rapporto con il Venditore.
Il Venditore con le presenti dichiara che utilizzerà i dati personali trasferiti dal Cliente nel rispetto delle previsioni del codice italiano sulla privacy (Decreto Legislativo n. 196/03).

12. RISOLUZIONE DEL CONTRATTO

Il contratto di fornitura potrà essere risolto di diritto ai sensi dell'art. 1456 c.c. per effetto della semplice dichiarazione scritta del Venditore di avvalersi della presente clausola risolutiva espressa qualora l'Acquirente:
- Ometta o ritardi i pagamenti dovuti;
- Venga posto in liquidazione o sia stato assoggettato ad una qualsiasi procedura concorsuale.

13. PROPRIETÀ INTELLETTUALE

Il Venditore conserva la proprietà intellettuale dei progetti, degli studi, dei disegni, dei modelli e dei prodotti che realizza o che vengono realizzati a suo nome e per suo conto. I marchi sotto quali i prodotti sono venduti non possono essere utilizzati dall'Acquirente se non per identificarli.

14. LEGGE APPLICABILE E MODALITÀ DI RISOLUZIONE DELLE CONTROVERSIE

Tutti i contratti con il Venditore saranno disciplinati dalla legge italiana. Qualsiasi controversia sarà devoluta alla competenza esclusiva del Foro di Torino.

Data: _____ Timbro, Nome Cognome e firma dell'Acquirente: _____

Ai sensi degli artt. 1341 e 1342 c.c. l'Acquirente dichiara di avere letto e approvare specificamente le previsioni contenute nei seguenti articoli delle condizioni generali: art. 3 Divieto di compensazione art. 5 Riserva di proprietà; art. 6 Limitazione della responsabilità; art. 8 Reclami ed accettazione dei Prodotti; art. 14 Modalità di risoluzione delle controversie.

Data: _____ Timbro, Nome Cognome e firma dell'Acquirente: _____

CONDITIONS GÉNÉRALES DE VENTES

1. DOMAINE D'APPLICATION ET EFFICACITÉ

Toutes les fournitures de produits effectuées par Facet S.r.l. (le « Vendeur »)à un client (l'« Acheteur »)sont régies par les présentes conditions générales qui l'emportent sur les conditions générales d'achat de l'Acheteur ainsi que sur les conditions particulières établies dans les offres et/ou confirmations de commande du Vendeur. En cas de contraste entre ce qui est exposé dans les conditions générales et dans les conditions particulières, ces dernières l'emporteront.
Les données et les illustrations relatives aux produits telles qu'elles figurent aux catalogues ou brochures du Vendeur ont un caractère indicatif et n'ont aucune valeur contraignante sauf disposition contraire expresse dans la confirmation de commande du Vendeur et elles sont susceptibles de modifications sans préavis concernant le dessin et le matériel.
Les codes originaux (OE) indiqués dans les catalogues ou dans autres documents sont mentionnés uniquement pour identifier les pièces de rechange. Le Vendeur livre seulement produits de propre production et avec propre code article et non produits avec codes OE.

2. FORMATION DU CONTRAT

Le contrat de fourniture sera finalisé par la confirmation écrite du Vendeur d'acceptation de la commande de l'Acheteur. Le Vendeur se réserve le droit de ne pas accepter de commande en cas de litige en cours avec le client concernant une commande précédente.

3. PRIX ET PAIEMENTS

Sauf si les parties n'en conviennent autrement, les paiements du prix doivent être effectués par l'Acheteur dans les délais et aux conditions établis dans la confirmation de commande au domicile du Vendeur.
Les paiements effectués par l'Acheteur à des apporteurs d'affaires et/ou agents sans mandat spécifique ne seront pas opposables au Vendeur.
En cas de retard de paiement, l'Acheteur sera tenu de verser des intérêts de retard au taux de la Banque Centrale Européenne en vigueur à la date en question, majoré de 7 (sept) points, sans préjudice de la faculté du Vendeur de demander les dommages intérêts pour tout dommage ultérieur.
L'Acheteur ne pourra pas, pour quelque raison que ce soit, sauf autorisation écrite, compenser ou garder toute somme due au Vendeur et il ne pourra non plus suspendre les paiements.
Les prix des produits s'entendent en Euros et sont hors TVA, emballage, frais de transport et d'assurance. Le Vendeur peut modifier les prix et les tarifs en vigueur à n'importe quel moment et sans préavis, sauf pour les commandes en cours. Cela en cas de renchérissement des matières premières, de la main d'œuvre, des transports, des prix d'assurance, etc.

4. DÉLAIS DE LIVRAISON ET MISE À DISPOSITION

Sauf si les parties n'en conviennent autrement dans la confirmation de commande, les fournitures des produits s'entendent pour mise à disposition de la marchandises selon les Incoterms 2010: FCA Orbassano. La marchandise voyage toujours pour le compte et aux risques et périls de l'Acheteur.
Les délais de livraison sont indicatifs et en cas de retard l'Acheteur n'aura aucun droit de demander la résiliation du contrat et/ou les dommages-intérêts.

5. RÉSERVE DE PROPRIÉTÉ

Les produits livrés restent la propriété du Vendeur jusqu'au complet paiement du prix relatif.
L'Acheteur aura le droit de vendre les produits achetés, ou les nouveaux produits ayant intégré les produits fournis par le Vendeur, étant entendu qu'en ce cas-là tous les revenus seront transférés au Vendeur jusqu'à concurrence du prix dû par l'Acheteur au Vendeur pour la fourniture desdits Produits.
Ce droit de vendre les produits expire dès lors que l'Acheteur n'aurait pas accompli son obligation de paiement pour une période de plus de 20 (vingt) jours ouvrables à partir de l'échéance. À cet effet, il incombe au Vendeur d'informer par écrit l'Acheteur de la révocation du droit de vendre. L'Acheteur devra mettre en œuvre toute mesure nécessaire pour la protection des produits faisant l'objet de la réserve de propriété ainsi que toute mesure permettant de ne pas confondre les produits du Vendeur avec les produits d'autres fournisseurs et de garder les produits du Vendeur dans des espaces bien délimités et facilement identifiables.

6. RÉSPONSABILITÉ DU VENDEUR ET LIMITATIONS

Le Vendeur ne sera responsable que de la bonne production des produits fournis, qui devront avoir les caractéristiques indiquées dans la confirmation de commande du Vendeur. Par contre, le Vendeur ne prend aucune responsabilité concernant l'éventuel mauvais fonctionnement de machines ou systèmes réalisés par l'Acheteur avec les produits fournis par le Vendeur.
Les produits doivent être correctement installés seulement par des techniciens formés et qualifiés, conformément aux spécifications du véhicule et en respect des réglementations nationales.
De toute manière, l'Acheteur ne pourra pas demander de dommages-intérêts pour manque à gagner, perte de production, perte d'image, immobilisation du véhicule automobile.
La responsabilité du Vendeur est de toute manière limitée à la valeur de la marchandise fournie, sauf en cas de dol ou de faute grave aux termes de la loi.

7. FORCE MAJEURE

Au cas où le Vendeur serait empêché de respecter le contrat pour des raisons de force majeure ou de toute manière indépendantes de sa volonté, les délais prévus pour l'exécution de la fourniture seront automatiquement prorogés d'une période correspondant à la durée des effets de l'événement de force majeure. À cet effet, on entend pour raisons de force majeure, à titre purement explicatif et non exhaustif : pénurie d'énergie ou de matières premières, grèves, mesures de l'administration publique, entraves à la circulation ou aux activités productives.

8. RÉCLAMATIONS et ACCEPTATION DES PRODUITS

Toute réclamation pour la non conformité des marchandises livrées ou pour des dommages découlant du transport ou pour des quantités manquantes par rapport aux produits commandés devra être communiquée par lettre recommandée avec avis de réception adressée directement au Vendeur dans un délai de 8 (huit) jours de la date de livraison des Produits, en cas de vices apparents et dans un délai de 8 (huit) jours de la découverte de vices cachés et, de toute manière, dans le délai d'un mois de la livraison, accompagnée de l'exposition détaillé des faits. À défaut de cela, les montants facturés seront considérés acceptés, à tous les effets, et ne seront plus contestables par l'Acheteur.
Aucun retour de marchandises ne sera accepté sans l'autorisation préalable écrite du Vendeur.

9. CONFORMITÉ AUX SPÉCIFICATIONS ET TERMES DE GARANTIE

Le Vendeur garantit que les produits seront conformes aux spécifications techniques déclarées par le Vendeur même à l'Acheteur dans la confirmation de commande et ladite garantie sera valable pour 2 (deux) ans à partir de la date de livraison des produits et, pour les produits ou les composants remplacés, à partir du jour de leur remplacement.
Pendant la période de garantie, le Vendeur auquel l'Acheteur aurait dénoncé les défauts, s'engage, de son choix, à réparer ou remplacer gratuitement dans un délai raisonnable les produits ou leurs parties résultant défectueux. Les frais et les risques du transport chez le Vendeur des produits résultant défectueux sont à la charge de l'Acheteur. Les produits remplacés restent la propriété du Vendeur.
La garantie expire en cas d'utilisation non conforme à la destination finale habituelle des produits ou non prévue dans les catalogues du vendeur ou bien si les produits ont été modifiés ou réparés sans l'autorisation du Vendeur.

10. GARANTIE DE LA CONFORMITÉ DES PRODUITS AUX SEULES NORMES UE

Le Vendeur garantit que les Produits seront conformes aux normes de l'Union européenne (UE) qui leur seront éventuellement applicables.
Le Vendeur ne délivre aucune garantie concernant la conformité de ces Produits aux normes et règlements, y compris expressément les normes en matière de sécurité et accidents, en vigueur dans la nation de l'Acheteur, si ce dernier est résident en dehors de l'UE ou, plus en général, en quelque nation que ce soit n'appartenant pas à l'UE dans laquelle les Produits fournis sont utilisés.

11. CONFIDENTIALITÉ ET PROTECTION DES DONNÉES

Les documents de quelque nature que ce soit fournis par le Vendeur resteront sa propriété et ne pourront être transférés à des tiers ou reproduits. L'Acheteur s'engage, également après la fin du contrat, à ne pas divulguer à des tiers les secrets commerciaux ou les informations réservées lui ayant été communiqués et dont il viendrait à connaissance au cours de son rapport avec le Vendeur.
Par les présentes le Vendeur déclare qu'il utilisera les données personnelles communiquées par le Client dans le respect des dispositions du code italien en matière de confidentialité (Décret Législatif n. 196/03).

12. RÉSILIATION DU CONTRAT

Le contrat de fourniture pourra être résilié de plein droit aux termes de l'art.1456 du code civil par la simple déclaration écrite du Vendeur de se prévaloir de la présente clause résolutoire expresse dans les cas suivants :
- en cas de défaut ou de retard de paiement de l'Acheteur
- si l'Acheteur est mis en liquidation judiciaire ou a été soumis à une procédure collective.

13. PROPRIÉTÉ INTELLECTUELLE

Le Vendeur garde la propriété intellectuelle des projets, des études, des dessins, des modèles et des produits qu'il réalise ou qui sont réalisés en son nom ou pour son compte. Les marques sous lesquelles les produits sont vendus ne peuvent être utilisées par l'Acheteur que pour les identifier.

14. LOI APPLICABLE ET MODALITÉS DE RÈGLEMENT DES LITIGES

Tous les contrats avec le Vendeur seront régis par le droit italien. Tout litige sera soumis à la compétence exclusive du Tribunal de Turin.

Date: _____ Cachet, Prénom Nom et signature de l'Acheteur: _____

Aux termes des articles 1341 et 1342 du c.v. l'Acheteur déclare avoir lu et approuvé spécifiquement les dispositions des articles suivants des conditions générales : art. 3 Interdiction de compensation art. 5 Réserve de propriété; art. 6 Limitation de la responsabilité; art. 8 Réclamation et Acceptation des Produits; art. 14 Modalités de règlement des litiges.

Date: _____ Cachet, Prénom Nom et signature de l'Acheteur: _____

ALLGEMEINE VERKAUFSBEDINGUNGEN

1. GELTUNGSBEREICH UND WIRKSAMKEIT

Für alle Lieferungen von Produkten durch die Gesellschaft Facet S.r.l. (der "Verkäufer") an einen Kunden (der "Käufer") gelten die vorliegenden allgemeinen Verkaufsbedingungen, die vor den Einkaufsbedingungen des Käufers sowie den besonderen Bedingungen in den Angeboten und/oder Auftragsbestätigungen des Verkäufers Vorrang haben. Sollten Widersprüche zwischen dem Inhalt der allgemeinen Bedingungen und dem Inhalt der besonderen Bedingungen bestehen, sind Letztere vorrangig.
Die Daten und Abbildungen in Bezug auf die Produkte in den Katalogen oder Broschüren des Verkäufers sind Beispiele und haben keinen bindenden Wert, wenn dies in der Auftragsbestätigung des Verkäufers nicht ausdrücklich vorgesehen ist. Zudem können diese Daten und Abbildungen Änderungen am Design und Material unterliegen, ohne dass diese vorher angekündigt werden müssen.
Die angegebenen Originalnummern in Katalogen oder anderen Dokumenten sind nur zum Zwecke der Identifikation angegeben. Der Verkäufer liefert nur Produkte aus eigener Produktion, die mit Facet Artikel-Nrn. und nicht OE P/Nr. identifiziert sind.

2. ZUSTANDEKOMMEN DES VERTRAGS

Der Liefervertrag kommt zustande, wenn der Verkäufer die Auftragsannahme des Käufers schriftlich bestätigt. Der Verkäufer behält sich das Recht vor, Aufträge nicht anzunehmen, wenn Streitigkeiten mit einem Kunden in Bezug auf einen vorhergehenden Auftrag vorliegen.

3. PREISE UND ZAHLUNGEN

Unbeschadet anderslautender Vereinbarungen, sind die Zahlungen vom Käufer innerhalb der in der Auftragsbestätigung vorgesehenen Zahlungsfristen und Modalitäten am Geschäftssitz des Verkäufers zu leisten. Zahlungen, die vom Käufer an Vermittler und/oder Vertreter geleistet werden, können ohne eine Sondervollmacht nicht beim Verkäufer geltend gemacht werden.
Im Fall von verspäteten Zahlungen ist der Käufer verpflichtet, Verzugszinsen in Höhe des von der Europäischen Zentralbank festgelegten und zu jenem Datum geltenden Zinssatzes zu zahlen, die um 7 (sieben) Prozent erhöht werden. Unbeschadet davon bleibt das Recht des Verkäufers, einen größeren Schaden geltend zu machen.
Der Käufer ist nicht befugt, aus welchem Grund auch immer, Summen, die dem Verkäufer zustehen, zu verrechnen oder einzubehalten oder die Zahlungen einzustellen, es sei denn, dies wurde schriftlich genehmigt.
Die Preise für die Produkte sind in Euro und ohne Mehrwertsteuer, Verpackung, Transportkosten und Versicherung angegeben. Der Verkäufer kann jederzeit geltende Preise und Tarife ohne Vorankündigung ändern. Dies gilt nicht für laufende Aufträge. Solche Änderungen können vorkommen, wenn sich die Preise für Rohstoffe, die Löhne, die Transportkosten und Versicherungspolicen usw. erhöhen.

4. LIEFERFRISTEN UND WARENRÜCKNAHME

Insofern nicht anders in der Auftragsbestätigung vereinbart, erfolgt die Lieferung der Produkte nach den Incoterms 2010: FCA (frei Frachtführer) Orbassano. Die Ware wird stets im Namen und auf Risiko des Käufers transportiert.
Die Lieferfristen verstehen sich als Richtzeiten. Im Fall von Verspätungen ist der Käufer nicht berechtigt, die Auflösung des Vertrags und Schadensersatz geltend zu machen.

5. EIGENTUMSVORBEHALT

Die gelieferten Produkte bleiben bis zur vollständigen Bezahlung des entsprechenden Preises Eigentum des Verkäufers.
Der Käufer ist berechtigt, die erworbenen Produkte oder neue Produkte, in welche die gelieferten Waren eingefügt werden, weiterzuveräußern, vorausgesetzt, dass alle Erträge in diesem Fall an den Verkäufer gehen, bis diese den Preis erreichen, den der Käufer dem Verkäufer für die Lieferung dieser Produkte schuldig ist.
Sollte der Käufer seiner Zahlungspflicht länger als 20 (Zwanzig) Arbeitstage nach Fälligkeit der Zahlung nicht nachkommen, verfällt dieses Recht auf Weiterveräußerung der Produkte. Diesbezüglich obliegt es dem Verkäufer, dem Käufer den Widerruf des Rechts auf Weiterveräußerung schriftlich mitzuteilen. Der Käufer muss jede notwendige Maßnahme zum Schutz der Produkte, die dem Eigentumsvorbehalt unterliegen, sowie alle Maßnahmen umsetzen, damit die Produkte des Verkäufers nicht mit denen anderer Lieferanten verwechselt werden. Der Käufer muss die Produkte des Verkäufers in abgegrenzten und leicht erkennbaren Bereichen aufbewahren.

6. HAFTUNG DES VERKÄUFERS UND BESCHRÄNKUNGEN

Der Verkäufer ist ausschließlich für die ordnungsgemäße Herstellung der gelieferten Produkte verantwortlich. Die gelieferten Produkte müssen die in der Auftragsbestätigung des Verkäufers vorgesehenen Merkmale aufweisen. Hingegen übernimmt der Verkäufer keinerlei Haftung für den eventuellen mangelhaften Betrieb der Maschinen oder Systeme, die mit den vom Verkäufer gelieferten Produkten realisiert worden sind.
Die Produkte müssen in angemessener Weise nur von zuständigen und qualifizierten Technikern verbunden sein und müssen nach den Bestimmungen der nationalen Vorschriften den Angaben des Fahrzeugs entsprechen.
In jedem Fall kann der Käufer keinen Schadensersatz für Profitausfall, Produktionsausfall, Verlust des Images und Stillstand des Kraftfahrzeugs geltend machen.
Die Haftung des Verkäufers beschränkt sich nur auf den Wert der gelieferten Ware unter Vorbehalt des Vorsatzes und des groben Verschuldens im Sinne des Gesetzes.

7. HÖHERE GEWALT

Sollte es dem Verkäufer unmöglich sein, den Vertrag aufgrund von höherer Gewalt oder von Ereignissen, die nicht von ihm zu vertreten sind, einzuhalten, dann werden die Fristen für die Ausführung der Lieferung automatisch um die Dauer der Ereignisse verlängert. Diesbezüglich sind rein beispielhaft ohne Anspruch auf Vollständigkeit als Gründe für höhere Gewalt anzusehen: Stromausfall, Mangel an Rohstoffen, Streiks, Maßnahmen der öffentlichen Verwaltung, Störungen im Straßenverkehr oder Produktionsstörungen.

8. REKLAMATIONEN und ANNAHME DER PRODUKTE

Alle Reklamationen in Bezug auf die Nichtkonformität der gelieferten Ware, Schäden durch den Transport oder eventuell fehlende Mengen gegenüber der bestellten Produktmenge müssen dem Verkäufer direkt und per Einschreiben mit Rückschein mitgeteilt werden. Diese Mitteilung muss bei offensichtlichen Mängeln innerhalb von 8 (acht) Tagen ab dem Lieferdatum und bei versteckten Mängeln innerhalb von 8 (acht) Tagen ab dem Datum, an dem diese entdeckt worden sind, und in jedem Fall innerhalb eines Monats nach Lieferung der Produkte erfolgen und eine ausführliche Beschreibung der Mängel enthalten. Mangels dieser Mitteilung werden die abgerechneten Beträge mit voller Rechtswirksamkeit als angenommen angesehen und können vom Käufer nicht mehr beanstandet werden.
Warenrücknahmen werden nicht angenommen, wenn diese nicht vorher vom Verkäufer genehmigt wurden.

9. ÜBEREINSTIMMUNG MIT DEN SPEZIFIKATIONEN UND GARANTIEBEDINGUNGEN

Der Verkäufer garantiert, dass die Produkte mit den technischen Spezifikationen übereinstimmen, die der Verkäufer in der Auftragsbestätigung für den Käufer angegeben hat. Die genannte Garantie gilt 2 (zwei) Jahre ab dem Datum der Lieferung der Produkte. Für die ersetzten Produkte oder Bestandteile gilt die Garantie ab dem Tag der Auswechslung.
Während der Garantiezeit verpflichtet sich der Verkäufer, die mangelhaften Produkte oder Teile davon innerhalb einer angemessenen Zeit wahlweise kostenlos zu reparieren oder zu ersetzen, wobei der Käufer dem Verkäufer diese Mängel mitzuteilen hat. Die Kosten und Risiken des Transports der mangelhaften Produkte an den Sitz des Verkäufers gehen zulasten des Käufers. Die ersetzten Produkte bleiben Eigentum des Verkäufers.
Die Garantie erlischt, wenn die Verwendung nicht mit dem bestimmungsgemäßen Gebrauch oder mit den in den Katalogen des Verkäufers vorgesehenen Gebrauch der Produkte übereinstimmt. Die Garantie erlischt ebenfalls, wenn die Produkte ohne die Genehmigung des Verkäufers verändert oder repariert wurden.

10. GEWÄHRLEISTUNG IN BEZUG AUF DIE ÜBEREINSTIMMUNG DER PRODUKTE MIT DEN EU-NORMEN

Der Verkäufer garantiert, dass die Produkte mit den eventuell anwendbaren Normen der Europäischen Union (EU) übereinstimmen.
Für die Übereinstimmung dieser Produkte mit Normen und Richtlinien, die im Land des Käufers gelten, sollte dieser seinen Sitz außerhalb der EU haben, oder allgemein die in jedem Land außerhalb der EU gelten, in dem die gelieferten Produkte verwendet werden, übernimmt der Verkäufer keine Garantie. Von der Garantie ausgeschlossen sind ausdrücklich die Normen über Sicherheit und Unfallverhütung.

11. VERTRAULICHKEIT UND DATENSCHUTZ

Dokumente jeder Art, die vom Verkäufer bereitgestellt werden, bleiben in dessen Besitz und dürfen nicht an Dritte weitergegeben oder vervielfältigt werden. Der Käufer verpflichtet sich, auch nach Vertragsende keine Geschäftsgeheimnisse und vertrauliche Informationen weiterzugeben, die ihm mitgeteilt wurden, oder von deren er im Lauf der Beziehungen mit dem Verkäufer Kenntnis erlangt hat.
Der Verkäufer erklärt hiermit, die vom Kunden angegebenen sensiblen Daten unter Einhaltung der Bestimmungen im italienischen Datenschutzkodex (Legislativdekret Nr. 196/03) zu behandeln.

12. AUFLÖSUNG DES VERTRAGS

Der Liefervertrag kann im Sinne von Art. 1456 des ital. ZGB („codice civile") durch die einfache schriftliche Erklärung des Verkäufers, dass er von dieser ausdrücklichen Aufhebungsklausel Gebrauch machen will, von Rechts wegen aufgehoben werden, wenn der Käufer:
- die fälligen Zahlungen unterlässt oder verspätet leistet;
- der Liquidation oder einem beliebigen Konkursverfahren unterzogen wird.

13. GEISTIGES EIGENTUM

Die Rechte am geistigen Eigentum in Bezug auf Projekte, Forschungen, Zeichnungen, Modelle und Produkte, die der Verkäufer realisiert oder die in seinem Namen und auf seine Rechnung realisiert werden, verbleiben beim Verkäufer. Die Marken, unter denen die Produkte verkauft werden, dürfen vom Käufer nur verwendet werden, um diese erkenntlich zu machen.

14. ANWENDBARES GESETZ UND MODALITÄTEN ZUR BEILEGUNG VON STREITIGKEITEN

Alle Verträge mit dem Verkäufer werden vom italienischen Gesetz geregelt. Alle Streitigkeiten werden der ausschließlichen Zuständigkeit des Gerichtssprengels in Turin zugewiesen.

Datum: _____ Stempel, Vor- und Zuname und Unterschrift des Käufers: _____

Der Käufer erklärt im Sinne der Art. 1341 und 1342 des ital. ZGB ("codice civile"), die in den folgenden Artikeln der allgemeinen Verkaufsbedingungen enthaltenen Bedingungen gelesen zu haben und diese ausnahmslos anzunehmen: Art. 3) Verrechnungsverbot, Art. 5) Eigentumsvorbehalt, Art. 6) Haftungsbeschränkung, Art. 8) Reklamationen und Annahme der Produkte, Art. 14) Modalitäten zur Beilegung von Streitigkeiten.

Datum: _____ Stempel, Vor- und Zuname und Unterschrift des Käufers: _____

CONDICIONES GENERALES DE VENTA

1. AMBITO DE APLICACIÓN Y EFICACIA

Todas las entregas de productos efectuadas por Facet S.r.l. (el "Vendedor") a un cliente (el "Comprador") se regirán por las presentes condiciones generales que prevalecerán sobre las condiciones de adquisición del Comprador, así como las condiciones particulares previstas en las licitaciones y/o confirmación de pedido del Vendedor. En caso de conflicto entre lo estipulado en las condiciones generales y en las condiciones particulares, prevalecerán estas últimas.
Los datos y las ilustraciones referidas a los productos resultantes de los catálogos o prospectos del Vendedor tienen carácter indicativo y no valor vinculante, salvo lo dispuesto expresamente en la confirmación del pedido por parte del vendedor y pueden ser sujetos a modificaciones de diseño y material sin previo aviso.
Los números originales (OE) indicados en los catálogos o en otros documentos sólo son mencionados para identificar las partes de repuesto.
El vendedor suministra únicamente los productos de su propia producción contraseñados con su propio código de articulo y no productos con los números OE.

2. FORMALIZACIÓN DEL CONTRATO

El contrato de suministro se perfecciona con la confirmación escrita del Vendedor de aceptación del pedido del Comprador. El Vendedor se reserva el derecho de no aceptar pedidos en el caso que hay una controversia con el cliente relativa a un pedido anterior

3. PRECIOS Y FORMAS DE PAGO

Salvo pacto en contrario, los pagos del precio deben ser efectuados por el Comprador en los términos y con la modalidad prevista en la confirmación del pedido en la dirección del Vendedor. Los pagos realizados por el Comprador a Corredores de Comercio y/o Agentes sin un poder legal específico no tendrán fuerza ejecutiva contra el Vendedor.
En caso de retraso en los pagos, el Comprador deberá abonar los intereses de demora iguales a los establecidos por el Banco Central Europeo en vigor en la fecha, más 7 (siete) puntos, reservándose en cada caso la facultad el Vendedor de pedir daños y perjuicios.
El Comprador no podrá, por ningún motivo, salvo autorización escrita, compensar o retener cantidades adeudadas al Vendedor, ni podrá suspender los pagos.
Los precios de los productos se entienden en Euros y no incluyen el IVA, embalaje, gastos de transporte o seguro. El Vendedor podrá modificar los precios y las tarifas en vigor en cada momento sin previo aviso, salvo en el caso de los pedidos en curso. Es decir, si se verifican recargos en las materias primas, mano de obra, en los transportes, en las primas de seguros, etc.

4. CONDICONES DE ENTREGA Y DEVOUCIONES

A menos que se disponga lo contrario en la confirmación del pedido, el suministro de los productos se entiende realizado conforme a la Incoterms 2010: FCA Orbassano. La mercancía viaja siempre por cuenta y riesgo del Comprador.
Los plazos de entrega se entienden indicativos y en caso de retraso, el Comprador no tiene derecho a solicitar la resolución del contrato y/o el resarcimiento de los daños.

5. RESERVA DE PROPIEDAD

Los productos suministrados permanecerán de propiedad del Vendedor hasta el pago total del precio.
El Comprador tendrá el derecho de vender los productos adquiridos, o nuevos productos en los que los productos suministrados por el Vendedor hayan sido incorporados, salvo que en este caso, todos los ingresos serán transferidos al Vendedor hasta el total del precio debido al Vendedor por el Comprador por el suministro de tales Productos.
Tal derecho de vender los productos decae si el Comprador no ha cumplido la obligación de pago durante un periodo de tiempo superior a 20 (veinte) días laborables desde la fecha límite. A tal fin, será potestad del Vendedor comunicar por escrito al Comprador la revocación del derecho a vender. El Comprador deberá tomar todas las medidas necesarias para la protección de los productos objeto de la reserva de propiedad, así como las medidas para no confundir los productos del Vendedor con los productos de otros proveedores y conservar los productos del Vendedor en espacios bien delimitados y fácilmente individualizables.

6. RESPONSABILIDAD DEL VENDEDOR Y LIMITACIONES

El Vendedor es exclusivamente responsable de la correcta producción de los productos suministrados, que deberán tener las características previstas en la confirmación del pedido por parte del Vendedor.
Sin embargo, el Vendedor no asume, ninguna responsabilidad por el eventual mal funcionamiento de equipos o sistemas realizados por el Comprador con los productos suministrados por el Vendedor.
Los productos deben ser instalados solamente por técnicos competentes y cualificados, en conformidad con las especificaciones del vehículo y cumpliendo con los requisitos de las normativas nacionales.
En cualquier caso, el Comprador no podrá reclamar el resarcimiento de los daños y perjuicios por el lucro cesante, pérdida de producción, daños de imagen o parada de vehiculo.
La responsabilidad del Vendedor es, por lo tanto limitada al valor de la mercancía suministrada, salvo dolo o culpa grave de conformidad con la ley.

7. LA FUERZA MAYOR

Si el Vendedor no puede cumplir el contrato por causa de fuerza mayor o cualquier circunstancia ajena a su voluntad, los plazos previstos para la ejecución de la oferta son automáticamente prorrogados por un período equivalente al de los efectos del evento de fuerza mayor. A tal fin, son consideradas causas de fuerza mayor, con fines explicativos y no exhaustivos: ausencia de energía o de materias primas, huelgas, medidas de la Administración Pública, obstáculos en la circulación, o en las actividades productivas.

8. RECLAMACIONES y ACEPTACIÓN DE LOS PRODUCTOS

Toda reclamación relativa a la no conformidad de las mercancías consignadas o por daños debidos al transporte o por eventuales faltas de cantidad respecto a los productos encargados debe ser comunicada por carta registrada con acuse de recibo dirigida directamente al vendedor en los 8 (ocho) días desde la fecha de entrega de los Productos, en el caso de vicios ocultos y dentro de los 8 (ocho) días desde el descubrimiento y dentro del mes siguiente de la entrega, con una exposición detallada de los hechos. En su defecto, los importes facturados se entenderán, a todos los efectos, aceptados y no cuestionables por el Comprador.
No se aceptan productos devueltos si no han sido previamente autorizados por escrito por el Vendedor.

9. CONFORMIDAD DE LAS ESPECIFICACIONES Y CONDICIONES DE GARANTÍA

El Vendedor garantiza que los productos serán conformes a las especificaciones técnicas declaradas por el Vendedor mismo al Comprador en la confirmación del pedido y dicha garantía tendrá validez de 2 (dos) años desde la fecha de la consigna de los productos y para los productos o componentes en sustitución, desde la fecha de sustitución.
Durante el periodo de garantía, el Vendedor al que el Comprador haya denunciado los defectos, se compromete, a su elección, dentro de unos términos razonables, a reparar o sustituir gratuitamente los productos o las partes de los mismos que hubieran resultado defectuosos. Los costes y los riesgos debidos al transporte de los productos defectuosos a la sede del Vendedor, son a cargo del Comprador. Los productos sostituidos quedan de propiedad del Vendedor.
La garantía no es válida en el caso de uso no conforme al destino final habitual de los productos o no prevista en los catálogos del vendedor o incluso si los productos han sido modificados o reparados sin la autorización del Vendedor.

10. GARANTÍA DE ADECUACIÓN DE LOS PRODUCTOS A LAS NORMAS UE

El Vendedor garantiza que los Productos serán conformes a las normas de la Unión Europea (UE) y pueden eventualmente ser aplicables.
No existe ninguna garantía del Vendedor en relación a la conformidad de estos Productos con las normas y regulaciones, fuera de las expresamente incluidas en las normas relativas a la seguridad y prevención de accidentes, en vigor en el país del Comprador, cuando este tenga su residencia fuera de la UE, o más en general, en cualquier nación que no pertenezca a la UE en la que los Productos suministrados vengan siendo utilizados.

11. CONFIDENCIALIDAD Y PROTECCIÓN DE DATOS

Los documentos de cualquier naturaleza facilitados por el Vendedor permanecerán de su propiedad y no podrán ser transferidos a terceros o reproducidos. El Comprador se compromete, incluso después de la finalización del contrato a no divulgar los secretos comerciales y las informaciones confidenciales que le hayan sido comunicadas o de las cuales tenga conocimiento en el transcurso de su relación con el Vendedor.
El Vendedor con la presente declara que usará los datos personales transferidos por el Cliente con el respeto a lo establecido en el Código de Privacidad Italiano (Decreto Legislativo n. 196/03)

12. RESOLUCIÓN DEL CONTRATO

El contrato de suministro podrá ser resuelto conforme a derecho según el art. 1456 C.C. por medio de declaración simple por escrito del Vendedor haciendo uso de la presente cláusula de rescisión si el Comprador:
- Omite o retrasa los pagos adeudados
- Se somete a liquidación o se encuentra sujeto a cualquier procedimiento concursal

13. PROPIEDAD INTELECTUAL

El Vendedor conserva la propiedad intelectual de los proyectos, de los estudios de los diseños, de los modelos y de los productos que realice o sean realizados en su nombre o por su cuenta. Las marcas bajo las cuales los productos son vendidos no pueden ser usadas por el Comprador salvo para identificarlos.

14. LEYES APLICABLES Y MODOS DE RESOLUCION DE LAS CONTROVERSIAS

Todos los contratos con el Vendedor serán sometidos a la legislación italiana. Cualquier controversia será resuelta por la jurisdicción exclusiva del Foro de Turín.

Fecha: _____ Sello, Nombre y Apellido y firma del Comprador: _____

En el sentido de los arts. 1341 y 1342 C.C. el Comprador declara haber leído y aceptado específicamente las previsiones contenidas en los siguientes artículos de las condiciones generales: art. 3 Prohibición de compensación, art. 5 Reserva de la propiedad; art. 6 Limitación de la responsabilidad; art. 8 Reclamaciones y Aceptación de los Productos; art. 14 Modos de resolución de las controversias.

Fecha: _____ Sello, Nombre y Apellido y firma del Comprador: _____

OUR PACKAGING

FA-IGN22Q1

-LE NOSTRE CONFEZIONI -NOTRE CONDITIONNEMENT -UNSERE VERPACKUNGSTYPEN -NUESTROS ENVASES

(A) Packaging size

- FORMATO CONFEZIONE
- FORMAT DU CONDITIONNEMENT
- VERPACKUNGSGRÖSSE
- TAMAÑO DE ENVASE

Illustrated section

- PARTE FIGURATA
- PARTIE ILLUSTRÉE
- BILDTEIL BEISPIEL
- PARTE ILUSTRADA

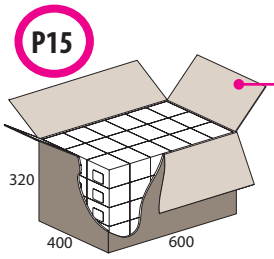

(B) Shipping box

- PACCO SPEDIZIONI
- COLIS D'EXPEDITION
- VERPACKUNG
- BULTO PARA EL DESPACHO

(A)	Z / X / Y (mm) X x Y x Z	cm³	(B) Q / P15 L589 X W389 X H299MM	(B) Q / P25 L389 X W189 X H299MM	(B) Q / P35 L389 X W189 X H149MM
1	27 X 45 X 62	75	720	200	100
3	40 X 46 X 98	180	360	90	20
3,5	74 X 80 X 42	250	252	72	36
04	77 X 97 X 74	550	120	36	18
04,5	37 X 126 X 144	815	90	30	15
05	97 X 128 X 74	920	72	21	9
05,5	72 X 76 X 194	1060	60	12	-
07	128 X 148 X 93	1760	36	12	5
07,5	128 X 185 X 100	2370	27	9	3
08	128 X 186 X 148	3520	18	6	-
08,5	194 X 380 X 72	5300	12	-	-
08,6	180 X 415 X 70	5220	8	-	-
08,7	120 X 470 X 70	3950	13	-	-
08,8	170 X 405 X 90	6200	6	-	-
09	145 X 293 X 127	5400	12	-	-

FACET
MADE IN ITALY
3.7518RS
ROTOR ARMS
DISTRIBUTOR CAP

FA-TM Thermal management - Gestione Termica - Gestion thermique - ThermoManagement - Gestión térmica

FA-SWI Ignition - Accensione - Allumage - Zündung - Encendido

FA-SEN Sensors - Sensori - Capteurs - Sensoren - Sensores

FA-SWI Switches - Interruttori - Interrupteurs - Shalter - Interruptores

FA-EM Exhaust Management - Gestione Gas di Scarico - Gestion Des Gaz D'echappement - Abgas-Management - Gestión De Gas De Escape

Corso Francia, 329 - Collegno - Torino (Italy) - Tel. +39.011.40.51.555 - Fax +39.011.40.51.702 - e-mail: marketing@facet.it - www.facet.eu